west virginia department of environmental protection

Office of Oil and Gas
601 57th Street SE
Charleston, WV 25304
(304) 926-0450
(304) 926-0452 fax

Earl Ray Tomblin, Governor
Randy C. Huffman, Cabinet Secretary
www.dep.wv.gov

September 16, 2015

WELL WORK PERMIT

Vertical Well

This permit, API Well Number: 47-9502309, issued to ALLIANCE PETROLEUM CORPORATION, is evidence of permission granted to perform the specified well work at the location described on the attached pages and located on the attached plat, subject to the provisions of Chapter 22 of the West Virginia Code of 1931, as amended, and all rules and regulations promulgated thereunder, and to all conditions and provisions outlined in the pages attached hereto. Notification shall be given by the operator to the Oil and Gas Inspector at least 24 hours prior to the construction of roads, locations, and/or pits for any permitted work. In addition, the well operator shall notify the same inspector 24 hours before any actual well work is commenced and prior to running and cementing casing. Spills or emergency discharges must be promptly reported by the operator to 1-800-642-3074 and to the Oil and Gas inspector.

Please be advised that form WR-35, Well Operators Report of Well Work is to be submitted to this office within 90 days completion of permitted well work, as should form WR-34 Discharge Monitoring Report within 30 days of discharge of pits, if applicable. Failure to abide by all statutory and regulatory provisions governing all duties and operations hereunder may result in suspension or revocation of this permit and, in addition, may result in civil and/or criminal penalties being imposed upon the operators.

In addition to the applicable requirements of this permit, and the statutes and rules governing oil and gas activity in WV, this permit may contain specific conditions which must be followed. Permit conditions are attached to this cover letter.

Per 35CSR-4-5.2.g this permit will expire in two (2) years from the issue date unless permitted well work is commenced. If there are any questions, please feel free to contact me at (304) 926-0499 ext. 1654.

James Martin
Chief

Operator's Well No: PARR 1 V NORTH
Farm Name: STATOIL ONSHORE PROPERTIES
API Well Number: 47-9502309
Permit Type: Vertical Well
Date Issued: 09/16/2015

Promoting a healthy environment.

9502309

PERMIT CONDITIONS

West Virginia Code §22-6-11 allows the Office of Oil and Gas to place specific conditions upon this permit. Permit conditions have the same effect as law. Failure to adhere to the specified permit conditions may result in enforcement action.

CONDITIONS

1. If the operator encounters an unanticipated void, or an anticipated void at an unanticipated depth, the operator shall notify the inspector within 24 hours. Modifications to the casing program may be necessary to comply with W. Va. Code §22-6-20, which requires drilling to a minimum depth of thirty feet below the bottom of the void, and installing a minimum of twenty (20) feet of casing. Under no circumstance should the operator drill more than fifty (50) feet below the bottom of the void or install less than twenty (20) feet of casing below the bottom of the void.

2. Pursuant to 35 CSR 4-19.1.a, at the request of the surface owner all water wells or springs within 1000 feet of the proposed well that are actually utilized for human consumption, domestic animals or other general use shall be sampled and analyzed.

3. Pursuant to 35 CSR 4-19.1.c, if the operator is unable to sample and analyze any water well or spring with one thousand (1,000) feet of the permitted well location, the Office of Oil and Gas requires the operator to sample, at a minimum, one water well or spring located between one thousand (1,000) feet and two thousand (2,000) feet of the permitted well location.

4. All pits must be lined with a minimum of 20 mil thickness synthetic liner.

5. In the event of an accident or explosion causing loss of life or serious personal injury in or about the well or while working on the well, the well operator or its contractor shall give notice, stating the particulars of the accident or explosion, to the oil and gas inspector and the Chief within twenty-four (24) hours.

6. During the surface casing and cementing process, in the event cement does not return to the surface, or any other casing string that is permitted to circulate cement to the surface and does not return to the surface, the oil and gas inspector shall be notified within twenty-four (24) hours

7. Well work activities shall not constitute a hazard to the safety of persons.

8. Operator shall provide the Office of Oil & Gas notification of the date that drilling commenced on this well. Such notice shall be provided by sending an email to DEPOOGNotify@wv.gov within 30 days of commencement of drilling.

WW - 2B
(Rev. 8/10)

9502309
CK 51612
650 00

STATE OF WEST VIRGINIA
DEPARTMENT OF ENVIRONMENTAL PROTECTION, OFFICE OF OIL AND GAS
WELL WORK PERMIT APPLICATION

1) Well Operator: Alliance Petroleum Corporation

Operator ID	County	District	Quadrangle
305762	Tyler	Ellsworth	Shirley 7.5'

2) Operator's Well Number: Parr 1 V North 3) Elevation: 1202'

4) Well Type: (a) Oil x or Gas x

(b) If Gas: Production x / Underground Storage _____

Deep _____ / Shallow _____

Michael Daff 9-3-15

5) Proposed Target Formation(s): Rhinestreet Proposed Target Depth: 5200' to 5900'
6) Proposed Total Depth: 6000' Feet Formation at Proposed Total Depth: Rhinestreet
7) Approximate fresh water strata depths: 48'
8) Approximate salt water depths: 1580'

9) Approximate coal seam depths: 610'

10) Approximate void depths,(coal, Karst, other): N/A

11) Does land contain coal seams tributary to active mine? No

12) Describe proposed well work and fracturing methods in detail (attach additional sheets if needed)
Drill and complete a conventional vertical well. Fracture 2 zones in the Riley and Rhinestreet.
1500 bbls in each zone - slick water and sand or foam fracture.

13) **CASING AND TUBING PROGRAM**

TYPE	SPECIFICATIONS Size	Grade	Weight per ft	FOOTAGE INTERVALS For Drilling	Left in Well	CEMENT Fill -up (Cu. Ft.)
Conductor	13"	H-40	36.0 #/ft	32'		
Fresh Water	9-5/8"	H-40	26.0 #/ft	~~300'-400'~~	~~300'-400'~~	CTS - 184 Cu.Ft. 198'
Coal						
Intermediate	7"	J-55	20.0 #/ft		1502'	CTS - 278 Cu.Ft.
Production	4-1/2"	J-55	10.5 #/ft		5960'	158 Cu.Ft.
Tubing	1-1/2"	J-55	2.75 #/ft		5900'	
Liners						

MDC 9-3-15

RECEIVED Office of Oil and Gas SEP 04 2015 WV Department of Environmental Protection

Packers: Kind: _____
Sizes: _____
Depths Set _____

9502309

WW-9
(2/15)

API Number 47 - 095 - _____
Operator's Well No. Parr 1 V North

STATE OF WEST VIRGINIA
DEPARTMENT OF ENVIRONMENTAL PROTECTION
OFFICE OF OIL AND GAS

FLUIDS/ CUTTINGS DISPOSAL & RECLAMATION PLAN

Operator Name Alliance Petroleum Corporation OP Code 305762

Watershed (HUC 10) Outlet Middle Island Creek Quadrangle Shirley 7.5'

Do you anticipate using more than 5,000 bbls of water to complete the proposed well work? Yes ☐ No ☑

Will a pit be used? Yes ☑ No ☐

If so, please describe anticipated pit waste: Drill Cuttings - Soap - Brine

Will a synthetic liner be used in the pit? Yes ☑ No ☐ If so, what ml.? 60

Proposed Disposal Method For Treated Pit Wastes:

MDG
9-3-15

■ Land Application
_____ Underground Injection (UIC Permit Number _____)
_____ Reuse (at API Number _____)
_____ Off Site Disposal (Supply form WW-9 for disposal location)
_____ Other (Explain _____

Will closed loop system be used? If so, describe: N/A

Drilling medium anticipated for this well (vertical and horizontal)? Air, freshwater, oil based, etc. Air

-If oil based, what type? Synthetic, petroleum, etc. N/A

Additives to be used in drilling medium? Soap - KCL - Clay Stabalizer

Drill cuttings disposal method? Leave in pit, landfill, removed offsite, etc. Leave in pit

-If left in pit and plan to solidify what medium will be used? (cement, lime, sawdust) Lime

-Landfill or offsite name/permit number? _____

Permittee shall provide written notice to the Office of Oil and Gas of any load of drill cuttings or associated waste rejected at any West Virginia solid waste facility. The notice shall be provided within 24 hours of rejection and the permittee shall also disclose where it was properly disposed.

I certify that I understand and agree to the terms and conditions of the GENERAL WATER POLLUTION PERMIT issued on August 1, 2005, by the Office of Oil and Gas of the West Virginia Department of Environmental Protection. I understand that the provisions of the permit are enforceable by law. Violations of any term or condition of the general permit and/or other applicable law or regulation can lead to enforcement action.

I certify under penalty of law that I have personally examined and am familiar with the information submitted on this application form and all attachments thereto and that, based on my inquiry of those individuals immediately responsible for obtaining the information, I believe that the information is true, accurate, and complete. I am aware that there are significant penalties for submitting false information, including the possibility of fine or imprisonment.

Company Official Signature [signature]

Company Official (Typed Name) Jeffrey Sayger

Company Official Title Designated Agent

RECEIVED
Office of Oil and Gas
SEP 04 2015
WV Department of Environmental Protection

Subscribed and sworn before me this 4th day of September, 20 15

[signature]
Notary Public

NOTARIAL SEAL STATE OF OHIO

BOBBIE L. LAUER, Notary Public
In and For The State of Ohio
My Commission Expires 2-21-2016

My commission expires Feb. 21, 2016

9502309

Form WW-9

Operator's Well No. Parr 1 V North

Alliance Petroleum Corporation

Proposed Revegetation Treatment: Acres Disturbed 2.0 Prevegetation pH 6.5

Lime 3 Tons/acre or to correct to pH 6.5

Fertilizer type 10 - 20 - 10

Fertilizer amount 667 lbs/acre

Mulch 2 (Hay) Tons/acre

Seed Mixtures

Temporary		Permanent	
Seed Type	lbs/acre	Seed Type	lbs/acre
KY-31	40	Orchard Grass	15
Alsike Colver	5	Alsike Clover	5
Annual Rye	15		

Attach:
Drawing(s) of road, location, pit and proposed area for land application (unless engineered plans including this info have been provided)

Photocopied section of involved 7.5' topographic sheet.

Plan Approved by: Michael Daff

Comments: Preseed & mulch any disturbed areas per WVDEP regulations. Maintain & upgrade E-n-s as necessary.

Title: Oil & Gas Inspector Date: 9-3-15

Field Reviewed? (✓) Yes ( ) No

RECEIVED
Office of Oil and Gas
SEP 04 2015
WV Department of
Environmental Protection

9502309

WW-2B1
(5-12)

Well No. Parr 1 V North

West Virginia Department of Environmental Protection
Office of Oil and Gas

NOTICE TO SURFACE OWNERS

The well operator named below is preparing to file for a permit from the state to drill a new well. Before a well work permit can be filed with the Chief of the Office of Oil and Gas, the well operator is required to have given notice of the right to request water well or spring analytical testing. This notice shall be given to the owners or occupants of land which have a water well or spring being utilized for human consumption, domestic animals, or other general use and which is located within 1000 feet of the proposed well site.

With this form, the operator is giving you notice of your right to request analytical testing. The operator is required to sample and analyze the water wells or springs of all owners or occupants who request it. Therefore, if you wish to have your water well or spring tested, contact the operator named below.

All sampling shall be completed prior to drilling. Within thirty (30) days of the receipt of such sample analyses the operator shall submit the results to the Chief of the Office of Oil and Gas and to the owners or occupants who may have requested them.

Be advised, you have the right to sample and analyze any water supply at your own expense.

Listed below is the laboratory chosen by operator to perform analysis, and contactor chosen to collect sample.

Certified Laboratory Name: Fairway Laboratories
Sampling Contractor: Jericho Land Resources

Well Operator: Alliance Petroleum Corporation
Address: 4150 Belden Village Avenue, Suite 410
Canton, OH 44718
Telephone: (330) 493-0440

FOR OPERATOR'S USE ONLY: Below, or on an attached page, list those persons which were given this notice. Place an asterisk beside the one(s) that contacted you and requested sampling and analyses. If there were no requests made, indicate by underling which one you have selected to sample and analyze. If there are no water wells or springs within 1000 feet of the proposed site, the Chief may require the operator to test wells up to 2000 feet from the proposed site.

RECEIVED
Office of Oil and Gas

SEP 04 2015

WV Department of
Environmental Protection

9502309

JERICHO LAND RESOURCES

WELL OPERATOR: Alliance Petroleum Corporation
WELL OPERATOR #: Parr 1 V North

Notice to Surface Owner or Resident

The initial mapping review of the area surrounding the proposed well site revealed the below listed surface owner(s) that was potentially utilizing groundwater (potable) for consumption or other purposes within a 1,000' radius and up to 2,000' radius of the proposed well site. The following surface owner(s) will be notified of the opportunity to request a water sample should it be necessary. **Please note that the following information listed below could be subject to change upon further field inspection.*

Surface Owner or Resident Notified:

Owner:	Statoil USA Onshore Properties Inc.
Address:	2103 City West Blvd. Suite 800, Houston, TX 77042
Phone:	(713) 918-8200
Comments:	Tax Parcel # 02-17-52

Owner:	Jonathan S. Cooper
Address:	140 Fallen Timber Road, Middlebourne, WV 26149
Phone:	(304) 386-4356
Comments:	Tax Parcel # 02-17-51

Owner:	William J. and Almeda Sue James Joint Revocable Trust
Address:	1009 N. Breens Bay Road, Oconomowoc, WI 53066
Phone:	(262) 646-3518
Comments:	Tax Parcel # 02-17-53

95 02309

PARR LEASE
WELL NO. PARR 1 V NORTH

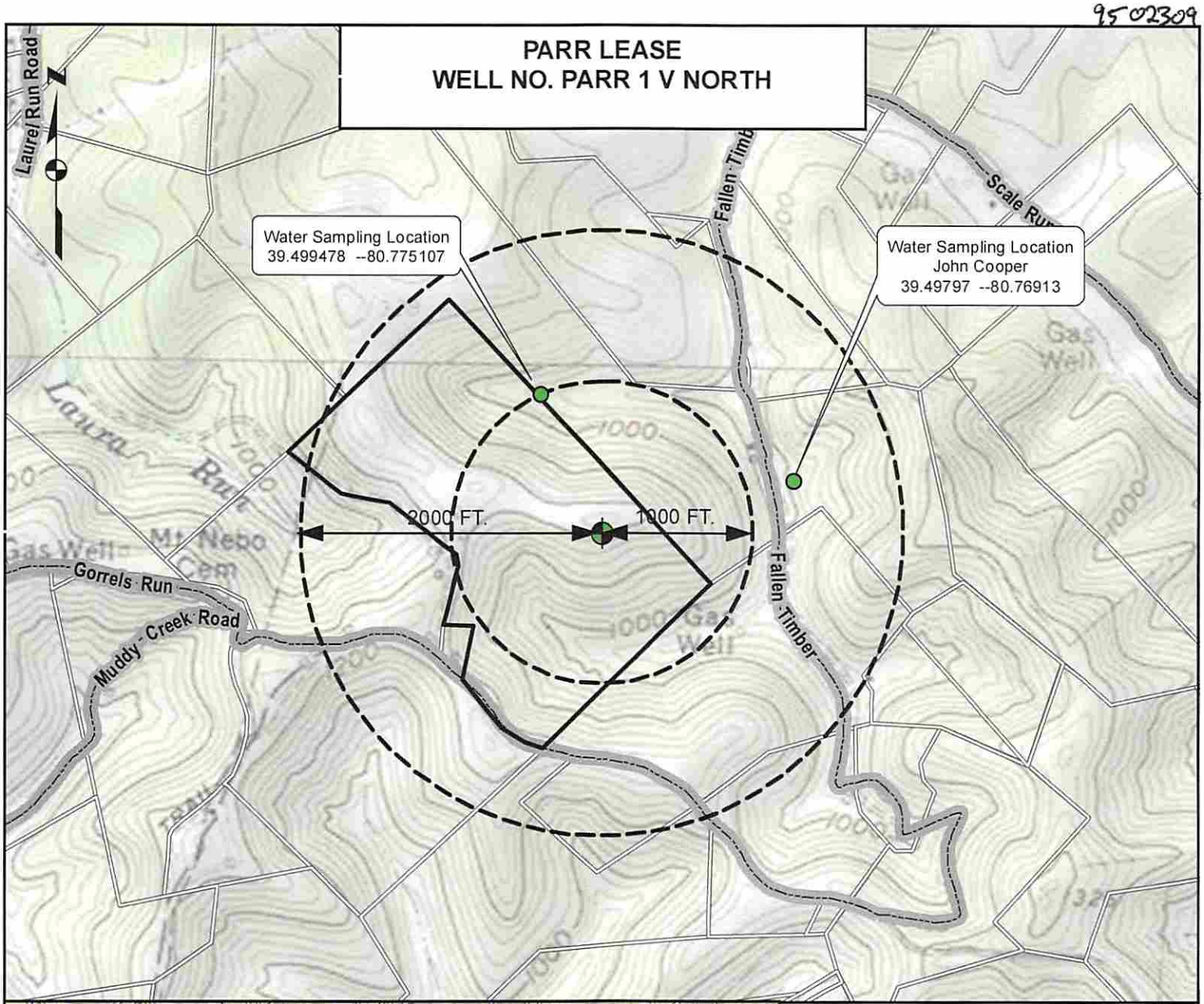

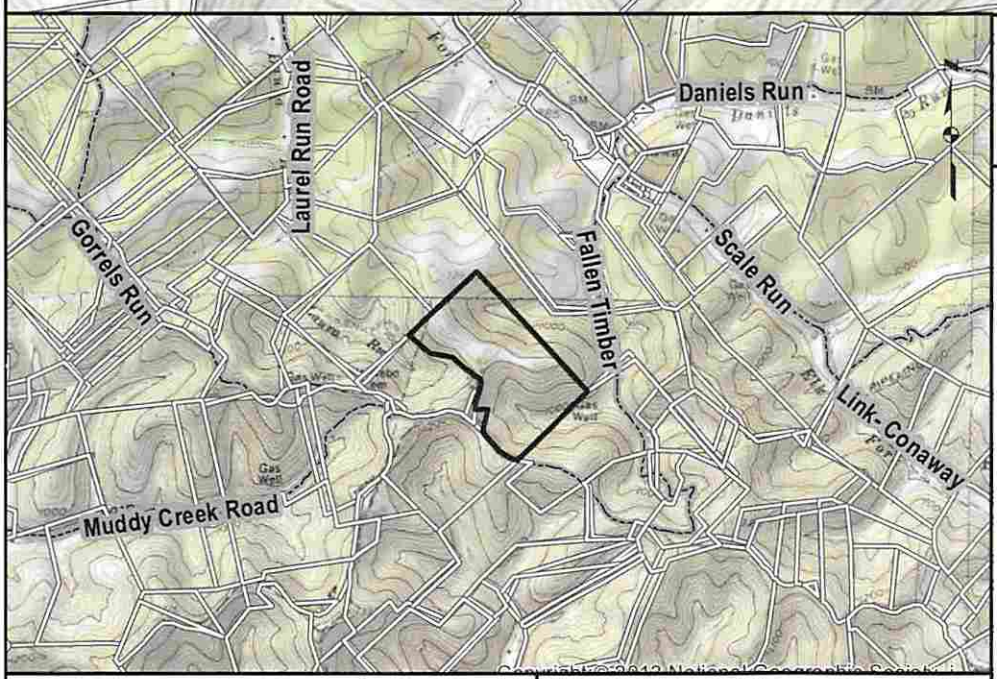

Copyright © 2012 National Geographic Society

0 1,500 3,000 6,000 Feet

TOPO SECTION OF SHIRLEY 7.5 USGS TOPO QUADRANGLE

1 inch = 1,000 feet

0 500 1,000 2,000 Feet

ALL ROADS SHOWN HEREON ARE EXISTING UNLESS OTHERWISE NOTED AND SHALL BE MAINTAINED IN ACCORDANCE WITH WV D.E.P. OIL AND GAS BMP MANUAL. ENTRANCES AT COUNTY/STATE ROADS SHALL BE MAINTAINED IN ACCORDANCE WITH WV D.O.T. REGULATION. SEPARATE PERMITS MAY BE REQUIRED BY THE WV D.O.T.

SEDIMENT BASINS (TRAPS) AND APPROPRIATE EROSION CONTROL BARRIERS ARE TO BE CONSTRUCTED AT ALL CULVERT AND CROSS DRAIN INLETS AND OUTLETS AS REQUIRED IN THE WV D.E.P. OIL AND GAS BMP MANUAL. FIELD CONDITIONS (ROCK OUTCROPS AND BEDROCK) MAY PROHIBIT INLET TRAPS BEING INSTALLED. WHEN THESE CONDITIONS EXIST ADDITIONAL EROSION CONTROL MEASURES SHALL BE EVALUATED AND UTILIZED AS NEEDED.

EARTHWORK CONTRACTORS ARE RESPONSIBLE FOR NOTIFICATION TO THE OPERATOR AND INSPECTOR PRIOR TO ANY DEVIATION FROM THIS PLAN.

TEMPORARY SEED & MULCH ALL SLOPES AFTER CONSTRUCTION OF LOCATION.

CUT & STACK ALL MARKETABLE TIMBER.

STACKED BRUSH MAY BE USED FOR SEDIMENT CONTROL.

APPLICATIONS FOR SEPARATE P.L.C. PERMITS ON THE ACCESS ROAD STREAM CROSSINGS HAVE BEEN PREPARED (IF APPLIES).

APC
Alliance Petroleum Corporation

JERICHO
LAND RESOURCES

9502304

PARR LEASE
WELL NO. PARR 1 V NORTH

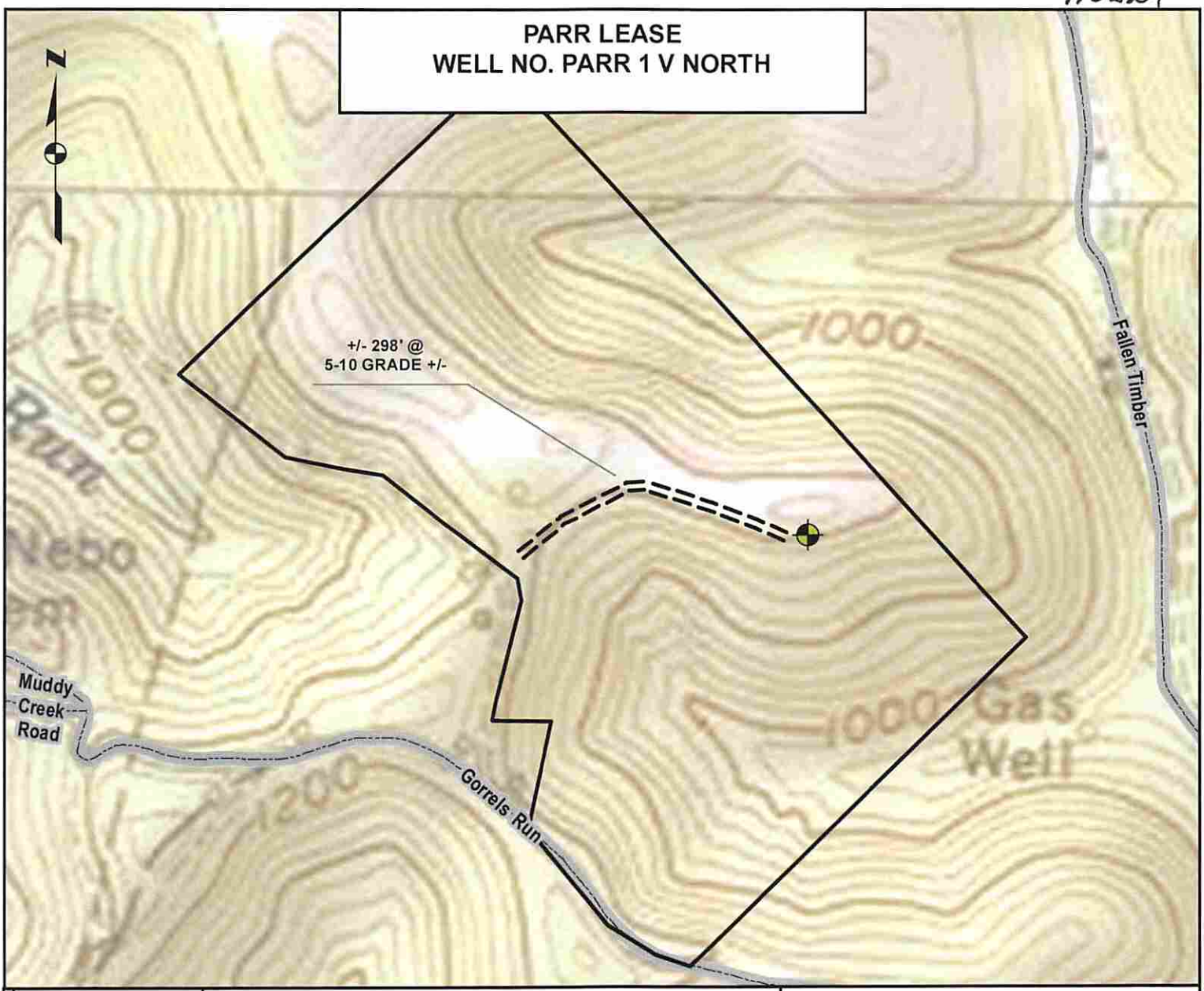

DETAIL SKETCH

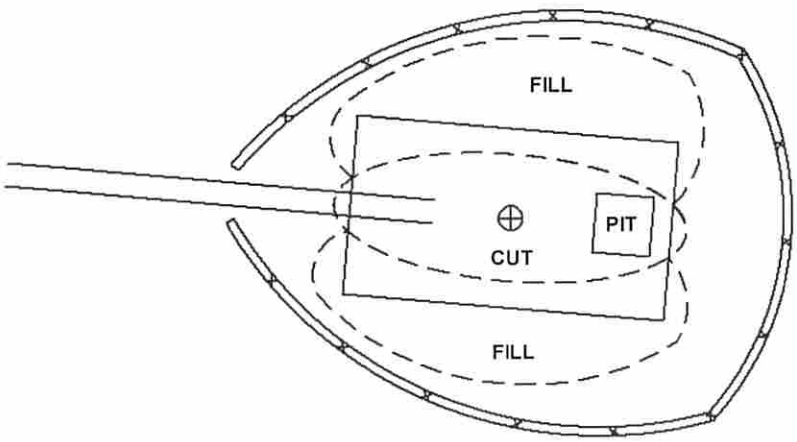

NOT TO SCALE

1 inch = 500 feet

0 250 500 1,000 Feet

ALL ROADS SHOWN HEREON ARE EXISTING UNLESS OTHERWISE NOTED AND SHALL BE MAINTAINED IN ACCORDENCE WITH WV D.E.P. OIL AND GAS BMP MANUAL ENTRANCES AT COUNTY/STATE ROADS SHALL BE MAINTAINED IN ACCORDANCE WITH WV D.O.T. REGULATION. SEPARATE PERMINTS MAY BE REQUIRED BY THE D.O.T.

SEDIMENT BASINS (TRAPS) AND APPROPRIATE EROSION CONTROL BARRIERS ARE TO BE CONSTRUCTED AT ALL CULVERT AND CROSS DRAIN INLETS AND OUTLETS AS REQUIRED IN THE WV D.E.P OIL AND GAS BMP MAUNUAL. FIELD CONDITIONS (ROCK OUTCROPS AND BEDROCK) MAY PROHIBIT INLET TRAPS BEING INSTALLED. WHEN THESE CONDITIONS EXHIST ADDITIONAL ERROSION CONTROL MEASURES SHALL BE EVALUATED AND UTILIZED AS NEEDED.

EARTHWORK CONTRACTORS ARE RESPONSIBLE FOR NOTIFICATION TO THE OPERATOR AND INSPECTOR PRIOR TO ANY DEVIATION FROM THIS PLAN.

TEMPORARY SEED & MULCH ALL SLOPES AFTER CONSTRUCTION OF LOCATION

CUT & STACK ALL MARKETABLE TIMBER.

STACKED BRUSH MAY BE USED FOR SEDIMENT CONTROL.

APPLICATIONS FOR SEPARATE PLC PERMITS ON THE ACCESS ROAD STREAM CROSSINGS HAVE BEEN PREPARED (IF APPLIES)

RECEIVED
Office of Oil and Gas
SEP 02 2015
WV Department of
Environmental Protection

MAG
9-3-2015

APC Alliance Petroleum Corporation

JERICHO LAND RESOURCES

TOPO SECTION OF SHIRLEY 7.5 USGS TOPO QUADRANGLE

9502309

Feet

Measurement Result

1,066.3 Feet

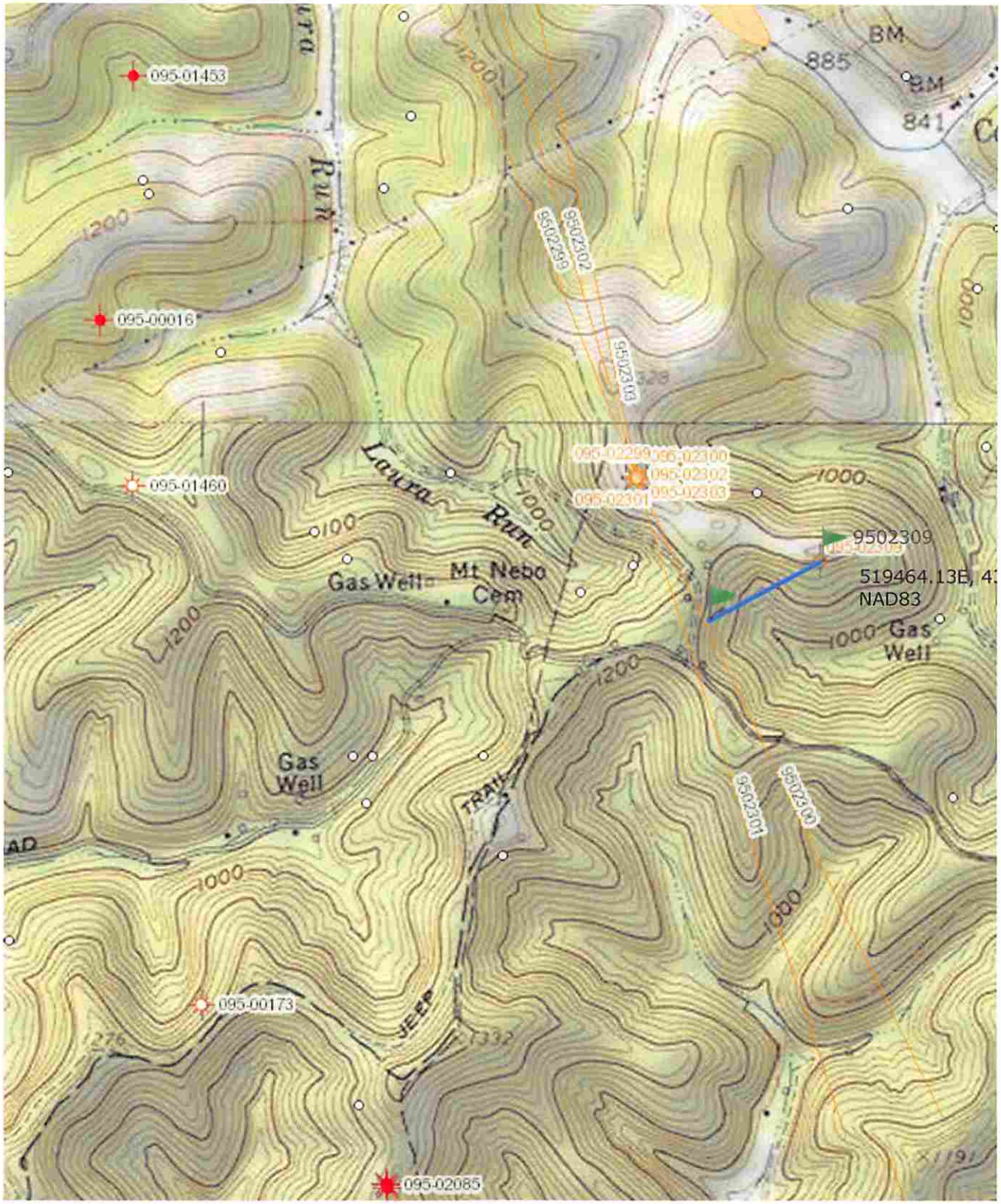

PARR LEASE
84.069 ACRES +/-
WELL NO.
PARR 1 V NORTH

GRAPHIC SCALE
0 400 800
1" = 800'

6,667'

LATITUDE 39°30'00"

LONGITUDE 80°45'00"

1,097'

2000'

WELL NO. PARR 1 V NORTH

WV SPC (GRID) NORTH

NAD'83 GEO. (DD°MM'SS.SS") N039°29' 49" W080°46' 25"
NAD'83 UTM (M) ZONE 17 NORTH N. 4371955.82 E. 519464.13
NAD'83 S.P.C. (W.V. NORTH ZONE- USFT) N. 365682.1200 E. 1609104.7730

LOCATION REFERENCES

S 79°01'17" E 79.8' 50" OAK TREE
S 68°19'40" W 101.5' 40" OAK TREE

NOTES ON SURVEY

1. PREPARED BY:
   BLAINE SURVEYING, PLLC
   9188 REDMOND RIDGE ROAD
   GALLIPOLIS FERRY, WV 25515
2. LEASE BOUNDARY SHOWN HEREON TAKEN FROM DEED BOOK 446 PAGE 233.
3. THIS IS NOT A BOUNDARY SURVEY. SURFACE OWNER AND ADJOINER INFORMATION TAKEN FROM THE ASSESSOR AND COUNTY CLERK RECORDS OF TYLER COUNTY IN AUGUST 2015

N/F COOPER JONATHAN S. 02-17-51

N/F JAMES WILLIAM J & ALMEDA S. JOINT REVOCABLE TRUST 02-17-53

STATOIL USA ONSHORE PROPERTIES INC., A CORPORATION 02-17-52

N/F COOPER JONATHAN S. 02-17-51

SURFACE HOLE WELL NO. PARR 1 V N

N/F JAMES WILLIAM J & ALMEDA S. JOINT REVOCABLE TRUST 02-17-53

5/8" IRON PIN WITH CAP FOUND, MARKED "HUGHES LLS 632 "

S 77° 40' 03" W 975.51'

N 43° 46' 28" E 1329.13'

KINGSLEY RIDGE ROAD

CR 34

5/8" IRON PIN WITH CAP FOUND, MARKED "HSM PS 834"

N/F WIKER WILLIAM J. MOSCHETTI ALBERT & YURIGAN JOSEPH 02-23-29

N/F PARR GEORGE M & RAYMA J 02-23-9

N/F WILLIAMS JENNIFER R. CAMPBELL 02-23-11

N/F MORGAN AMANDA 05-2-30

N/F PARR GEORGE M & RAYMA J 02-23-10

N/F JACKSON TERRELL LEE ET AL 05-2-4

LEGEND

- PROPERTY CORNER (STONE)
- PROPERTY CORNER (IRON PIPE OR PIN)
- WELL NO. PARR 1 V NORTH (PROPOSED)
- EXISTING OIL & GAS WELL
- EXISTING WATER WELL
- WATER SOURCE TO BE TESTED (STREAM)
- LEASE LINE
- SURFACE LINE

MINIMUM DEGREE OF ACCURACY : SUB-METER *FILE # :* PARR 1 V NORTH *SCALE :* 1" = 800'

HORIZONTAL AND VERTICAL CONTROL DETERMINED BY: *DGPS (MAPPING GRADE TIE TO CORS NETWORK)*

JONATHAN BLAINE LICENSED No. 2220 STATE OF WEST VIRGINIA PROFESSIONAL SURVEYOR

I, THE UNDERSIGNED, HEREBY CERTIFY THAT THIS PLAT IS CORRECT TO THE BEST OF MY KNOWLEDGE AND BELIEF AND SHOWS ALL THE INFORMATION REQUIRED BY LAW AND THE REGULATIONS ISSUED AND DESCRIBED BY THE DEPARTMENT OF ENVIRONMENTAL PROTECTION

Signed: Jonathan Blaine

L.L.S.: #2220

(+) DENOTES LOCATION OF WELL ON UNITED STATES TOPOGRAPHIC MAPS
DATE: MARCH 31, 2014
REVISED, 2014

API WELL NO. 47 095 02309
OPERATORS WELL NO. PARR 1 V NORTH *STATE* *COUNTY* *PERMIT*

STATE OF WEST VIRGINIA
DIVISION OF ENVIRONMENTAL PROTECTION
OFFICE OF OIL AND GAS

STATE OF WEST VIRGINIA MONTANI SEMPER LIBERI

WELL TYPE: OIL ____ GAS X *LIQUID INJECTION* ____ *WASTE DISPOSAL* ____ *IF "GAS" PRODUCTION* X *STORAGE* ___ *DEEP* ___ *SHALLOW* X

LOCATION:

ELEVATION: 1202' *WATERSHED:* OUTLET MIDDLE ISLAND CREEK

DISTRICT: ELLSWORTH *COUNTY:* TYLER *QUADRANGLE:* SHIRLEY 7.5'

SURFACE OWNER: STATOIL USA ONSHORE PROPERTIES INC. *ACREAGE:* 84.069 +/-
ROYALTY OWNER: ALMEDA S. JAMES , *ET AL* *ACREAGE:* 84.069 +/-

PROPOSED WORK: *LEASE NO.* ____

DRILL X *CONVERT* ____ *DRILL DEEPER* ____ *REDRILL* ____ *FRACTURE OR STIMULATE* X *PLUG OFF OLD* ____

FORMATION ____ *PERFORATE NEW FORMATION* ____ *PLUG AND ABANDON* ____ *CLEAN OUT AND REPLUG* ____ *OTHER* ____

PHYSICAL CHANGE IN WELL (SPECIFY) ____ *TARGET FORMATION:* RHINESTREET

ESTIMATED DEPTH: TVD 6,000'

WELL OPERATOR: ALLIANCE PETROLEUM CORPORATION *DESIGNATED AGENT:* JEFFREY SAYGER
ADDRESS: 4150 BELDEN VILLAGE AVE NW SUITE 410 *ADDRESS:* 16 FOXHILL TERRACE
CANTON, OH 44718-2553 PARKERSBURG WV 26101

9502309

WW-2A
(Rev. 6-14)

1). Date: August 31, 2015

2.) Operator's Well Number Parr 1 V North

3.) API Well No.: State 47- County 095 - Permit

STATE OF WEST VIRGINIA
DEPARTMENT OF ENVIRONMENTAL PROTECTION, OFFICE OF OIL AND GAS
NOTICE AND APPLICATION FOR A WELL WORK PERMIT

4) Surface Owner(s) to be served:
(a) Name Statoil USA Onshore Properti
Address 2103 City West Blvd. Suite 80
Houston, TX 77042
(b) Name
Address
(c) Name
Address

5) (a) Coal Operator
Name
Address
(b) Coal Owner(s) with Declaration
Name
Address
Name
Address
(c) Coal Lessee with Declaration
Name
Address

6) Inspector Michael Goff
Address P.O. Box 134
Pullman, WV 26421
Telephone (304) 549-9823

TO THE PERSONS NAMED ABOVE TAKE NOTICE THAT:

___ Included is the lease or leases or other continuing contract or contracts by which I hold the right to extract oil and gas

OR

x Included is the information required by Chapter 22, Article 6, Section 8(d) of the Code of West Virginia (see page 2)

I certify that as required under Chapter 22-6 of the West Virginia Code I have served copies of this notice and application, a location plat, and accompanying documents pages 1 through ___ on the above named parties by:

___ Personal Service (Affidavit attached)
x Certified Mail (Postmarked postal receipt attached)
___ Publication (Notice of Publication attached)

I have read and understand Chapter 22-6 and 35 CSR 4, and I agree to the terms and conditions of any permit issued under this application.

I certify under penalty of law that I have personally examined and am familiar with the information submitted on this application form and all attachments, and that based on my inquiry of those individuals immediately responsible for obtaining the information, I believe that the information is true, accurate and complete.

I am aware that there are significant penalties for submitting false information, including the possibility of fine and imprisonment.

NOTARIAL SEAL STATE OF OHIO
BOBBIE L. LAUER, Notary Public
In and For The State of Ohio
My Commission Expires 2-21-2016

Well Operator Alliance Petroleum Corporation
By: Jeffrey Savger
Its: Designated Agent
Address: 16 Fox Hill Terrace
Parkersburg, WV 26101
Telephone: (330) 417-3677
Email: jeff_savger@alliancepetroleum.com

Subscribed and sworn before me this 4th day of September, 2015

Bobbie L. Lauer Notary Public

My Commission Expires Feb. 21, 2016

RECEIVED
Office of Oil and Gas
SEP 04 2015
WV Department of Environmental Protection

Oil and Gas Privacy Notice

The Office of Oil and Gas processes your personal information, such as name, address and phone number, as a part of our regulatory duties. Your personal information may be disclosed to other State agencies or third parties in the normal course of business or as needed to comply with statutory or regulatory requirements, including Freedom of Information Act requests. Our office will appropriately secure your personal information. If you have any questions about our use of your personal information, please contact DEP's Chief Privacy Officer at depprivacyofficer@wv.gov

9502309

WW-2A Surface Waiver

SURFACE OWNER WAIVER

County Tyler

Operator Alliance Petroleum Corporation

Operator well number Parr 1 V North

INSTRUCTIONS TO SURFACE OWNERS NAMED ON PAGE WW2-A

The well operator named on page WW2A is applying for a permit from the State to do oil or gas well work. (Note: If the surface tract is owned by more than three persons, then these materials were served on you because your name appeared on the Sheriff's tax ticket on the land or because you actually occupy the surface tract. In either case, you may be the only owner who will actually receive these materials.) See Chapter 22 of the West Virginia Code. Well work permits are valid for 24 months. If you do not own any interest in the surface tract, please forward these materials to the true owner immediately if you know who it is. Also, please notify the well operator and the Office of Oil and Gas.

NOTE: YOU ARE NOT REQUIRED TO FILE ANY COMMENT.

WHERE TO FILE COMMENTS AND OBTAIN ADDITIONAL INFORMATION:

Chief, Office of Oil and Gas
Department of Environmental Protection
601 57th St. SE
Charleston, WV 25304
(304) 926-0450

Time Limits and methods for filing comments. The law requires these materials to be served on or before the date the operator files his Application. You have **FIFTEEN (15) DAYS** after the filing date to file your comments. Comments must be filed in person or received in the mail by the Chief's office by the time stated above. You may call the Chief's office to be sure of the date. Check with your postmaster to ensure adequate delivery time or to arrange special expedited handling. If you have been contacted by the well operator and you have signed a "voluntary statement of no objection" to the planned work described in these materials, then the permit may be issued at any time.

Comments must be in writing. Your comments must include your name, address and telephone number, the well operator's name and well number and the approximate location of the proposed well site including district and county from the application. You may add other documents, such as sketches, maps or photographs to support your comments.

The Chief has the power to deny or condition a well work permit based on comments on the following grounds:

1) The proposed well work will constitute a hazard to the safety of persons.
2) The soil erosion and sediment control plan is not adequate or effective;
3) Damage would occur to publicly owned lands or resources;
4) The proposed well work fails to protect fresh water sources or supplies;
5) The applicant has committed a substantial violation of a previous permit or a substantial violation of one or more of the rules promulgated under Chapter 22, and has failed to abate or seek review of the violation...".

If you want a copy of the permit as it is issued or a copy of the order denying the permit, you should request a copy from the Chief.

List of Water Testing Laboratories. The Office maintains a list of water testing laboratories which you can hire to test your water to establish water quality prior to and after drilling. Contact the Chief to obtain a copy.

VOLUNTARY STATEMENT OF NO OBJECTION

I hereby state that I have read the instructions to surface owners and that I have received copies of a Notice and Application for a Well Work Permit on Form WW2-A, and attachments consisting of pages 1 through ___ including a work order on Form WW2-B, a survey plat, and a soil and erosion plan, all for proposed well work on my surface land as described therein.

I further state that I have no objection to the planned work described in these materials, and I have no objection to a permit being issued on those materials.

FOR EXECUTION BY A NATURAL PERSON

_____ Date _____
Signature

_____
Print Name

FOR EXECUTION BY A CORPORATION, ETC.

Company Name Marty Babin

By _____ 9-1-2015
Date

Its Land Team Lead

Marty B. 9-1-2015
Signature Date

RECEIVED
Office of Oil and Gas
SEP 04 2015
WV Department of Environmental Protection

8502309
WATER SAMPLING & TESTING

7015 0640 0003 5605 9137

U.S. Postal Service™
CERTIFIED MAIL® RECEIPT
Domestic Mail Only

For delivery information, visit our website at www.usps.com®.

HOUSTON TX 77042

OFFICIAL USE

Certified Mail Fee	$3.45
Extra Services & Fees (check box, add fee as appropriate)	
☐ Return Receipt (hardcopy)	$ $0.00
☐ Return Receipt (electronic)	$ $0.00
☐ Certified Mail Restricted Delivery	$ $0.00
☐ Adult Signature Required	$ N/A
☐ Adult Signature Restricted Delivery	$ N/A
Postage	$1.42
Total Postage and Fees	$4.87

0044 11 PITTSBURGH PA 15244 MONTOUR BRANCH USPS Postmark Here AUG 31 2015 08/31/2015

Sent To: Statoil USA Onshore Properties, Inc.
Street and Apt. No., or PO Box No.: 2103 City West Blvd., Suite 900
City, State, ZIP+4®: Houston, TX 77042

PS Form 3800, April 2015 PSN 7530-02-000-9047 See Reverse for Instructions

← FULL PERMIT PACKET MAILED TO SURFACE LANDOWNER on 8/31/15.

* SURFACE LANDOWNER FOR WATER SOURCE AND FOR WELL.

7015 0640 0003 5605 9151

U.S. Postal Service™
CERTIFIED MAIL® RECEIPT
Domestic Mail Only

For delivery information, visit our website at www.usps.com®.

OCONOMOWOC WI 53066

OFFICIAL USE

Certified Mail Fee	$3.45
Extra Services & Fees (check box, add fee as appropriate)	
☐ Return Receipt (hardcopy)	$ $0.00
☐ Return Receipt (electronic)	$ $0.00
☐ Certified Mail Restricted Delivery	$ $0.00
☐ Adult Signature Required	$ N/A
☐ Adult Signature Restricted Delivery	$ N/A
Postage	$0.49
Total Postage and Fees	$3.94

0044 11 PITTSBURGH PA 15244 MONTOUR BRANCH USPS Postmark Here AUG 31 2015 08/31/2015

Sent To: William & ALMEDA JAMES
Street and Apt. No., or PO Box No.: 1009 N. BREENS BAY ROAD
City, State, ZIP+4®: OCONOMOWOC, WI 53066

PS Form 3800, April 2015 PSN 7530-02-000-9047 See Reverse for Instructions

← NOTICE TO SURFACE OWNER LETTER MAILED ON 8/31/15.

7015 0640 0003 5605 9144

U.S. Postal Service™
CERTIFIED MAIL® RECEIPT
Domestic Mail Only

For delivery information, visit our website at www.usps.com®.

MIDDLEBOURNE WV 26149

OFFICIAL USE

Certified Mail Fee	$3.45
Extra Services & Fees (check box, add fee as appropriate)	
☐ Return Receipt (hardcopy)	$ $0.00
☐ Return Receipt (electronic)	$ $0.00
☐ Certified Mail Restricted Delivery	$ $0.00
☐ Adult Signature Required	$ N/A
☐ Adult Signature Restricted Delivery	$ N/A
Postage	$0.49
Total Postage and Fees	$3.94

0044 11 PITTSBURGH PA 15244 MONTOUR BRANCH USPS Postmark Here AUG 31 2015 08/31/2015

Sent To: Jonathan S. COOPER
Street and Apt. No., or PO Box No.: 140 Fallen Timber Road
City, State, ZIP+4®: Middlebourne, WV 26149

PS Form 3800, April 2015 PSN 7530-02-000-9047 See Reverse for Instructions

← NOTICE TO SURFACE OWNER LETTER MAILED ON 8/31/15.

RECEIVED
Office of Oil and Gas
SEP 04 2015
WV Department of
Environmental Protection

9502309

WW-2A1
(Rev. 1/11)

Operator's Well Number Parr 1 V North

INFORMATION SUPPLIED UNDER WEST VIRGINIA CODE
Chapter 22, Article 6, Section 8(d)
IN LIEU OF FILING LEASE(S) AND OTHER CONTINUING CONTRACT(S)

Under the oath required to make the verification on page 1 of this Notice and Application, I depose and say that I am the person who signed the Notice and Application for the Applicant, and that –

(1) the tract of land is the same tract described in this Application, partly or wholly depicted in the accompanying plat, and described in the Construction and Reclamation Plan;

(2) the parties and recordation data (if recorded) for lease(s) or other continuing contract(s) by which the Applicant claims the right to extract, produce or market the oil or gas are as follows:

Grantor, Lessor, etc.	Grantee, Lessee, etc.	Royalty	Book/Page
Almeda S. James, et al	PetroEdge, et al.	12.5%-18% RI	384/79 & 384/75
PetroEdge Energy LLC	Statoil USA Onshore Properties Inc ,	100% WI	408/66
PetroEdge Energy LLC	Statoil USA Onshore Properties Inc.,	100% WI	419/247
PetroEdge Energy LLC	Statoil USA Onshore Properties Inc.,	100% WI	419/261
PetroEdge Energy LLC	Statoil USA Onshore Properties Inc.,	100% WI	406/147
PetroEdge Energy LLC	David Bowyer	100% WI	434/378
PetroEdge Energy LLC	Statoil USA Onshore Properties Inc.,	100%WI	436/1
David E. Bowyer	Statoil USA Onshore Properties Inc.,	100%WI	476/792
Statoil USA Onshore Properties Inc .	Alliance Petroleum Corporation by Assignment	100%WI	Not Yet Recorded

Acknowledgement of Possible Permitting/Approval In Addition to the Office of Oil and Gas

The permit applicant for the proposed well work addressed in this application hereby acknowledges the possibility of the need for permits and/or approvals from local, state, or federal entities in addition to the DEP, Office of Oil and Gas, including but not limited to the following:

- WV Division of Water and Waste Management
- WV Division of Natural Resources
- WV Division of Highways
- U.S. Army Corps of Engineers
- U.S. Fish and Wildlife Service
- County Floodplain Coordinator

The applicant further acknowledges that any Office of Oil and Gas permit in no way overrides, replaces, or nullifies the need for other permits/approvals that may be necessary and further affirms that all needed permits/approvals should be acquired from the appropriate authority before the affected activity is initiated.

Well Operator: Alliance Petroleum
By:Its: Designated Agent

RECEIVED
Office of Oil and Gas
SEP 04 2015
WV Department of
Environmental Protection

API I new

Operator: ALLIANCE PETROLEUM COR API: 9502309

WELL No: PARR 1 V NORTH

Reviewed by: ~~TRW 9/15/15~~ Date: 9/15/15

15 Day End of Comment: 09/21/15

CHECKLIST FOR FILING A PERMIT

✓ spot

Vertical Well

Ck# 51612
$650.00

- [x] WW-2B
- [x] Inspector signature on WW-2B
- [x] WW-2A (Notarized)
- [x] Certified Mail Receipts, Waivers, or Affidavits of Personal Service
- [x] Surface Owner Waiver ✓
- [ ] Coal Owner / Lessee /Operator Waiver
- [x] WW-2A-1 (Signed) Showing Book/Page Number and Royalty Percentage
- [x] WW-2B-1 (Names, addresses, and spot on topographical map listed as water testing) TRW [redacted]
- [x] WW-9 (Page 1 & 2) (Notarized)
- [x] More than 5,000 bbls No
- [x] Inspector Signature on WW-9
- [x] Reclamation plan
- [x] Topographic Map of location of well
- [x] Mylar Plat (Signed and Sealed) (Surface owner on plat matches WW-2A)
- [x] Bond
- [x] Company is Registered with the SOS
- [x] Worker's Compensation / Unemployment Insurance account is OK
- [x] $650.00 check ~~($550.00 if no pit)~~
- [x] Mine Data
- [ ] Addendum
- [ ] Flow Distance to Nearest Intake
- [ ] Horizontal Rule Series 8 Effective August 30, 2011-Well Sites Greater Than 3 Acres
  - [ ] Erosion and Sediment Control Plan
  - [ ] Site Construction Plan
  - [ ] Well Site Safety Plan
- [ ] Water Management Plan (Plan to withdraw 210,000 gallons or more during any one month period)
- [ ] Within a Municipality
  - [ ] Class I Legal Advertisement in Newspaper for first permit on well pad
- [ ] Professional Engineer/Company has COA