west virginia department of environmental protection

Office of Oil and Gas
601 57th Street SE
Charleston, WV 25304
(304) 926-0450
(304) 926-0452 fax

Earl Ray Tomblin, Governor
Randy C. Huffman, Cabinet Secretary
www.dep.wv.gov

June 09, 2016

WELL WORK PERMIT

Horizontal 6A Well

This permit, API Well Number: 47-8510282, issued to EQT PRODUCTION COMPANY, is evidence of permission granted to perform the specified well work at the location described on the attached pages and located on the attached plat, subject to the provisions of Chapter 22 of the West Virginia Code of 1931, as amended, and all rules and regulations promulgated thereunder, and to all conditions and provisions outlined in the pages attached hereto. Notification shall be given by the operator to the Oil and Gas Inspector at least 24 hours prior to the construction of roads, locations, and/or pits for any permitted work. In addition, the well operator shall notify the same inspector 24 hours before any actual well work is commenced and prior to running and cementing casing. Spills or emergency discharges must be promptly reported by the operator to 1-800-642-3074 and to the Oil and Gas inspector.

Please be advised that form WR-35, Well Operators Report of Well Work is to be submitted to this office within 90 days completion of permitted well work, as should form WR-34 Discharge Monitoring Report within 30 days of discharge of pits, if applicable. Failure to abide by all statutory and regulatory provisions governing all duties and operations hereunder may result in suspension or revocation of this permit and, in addition, may result in civil and/or criminal penalties being imposed upon the operators.

In addition to the applicable requirements of this permit, and the statutes and rules governing oil and gas activity in WV, this permit may contain specific conditions which must be followed. Permit conditions are attached to this cover letter.

Per 35CSR-4-5.2.g this permit will expire in two (2) years from the issue date unless permitted well work is commenced. If there are any questions, please feel free to contact me at (304) 926-0499 ext. 1654.

James Martin
Chief

Operator's Well No: 515874
Farm Name: MORTON, JERRY ET AL
API Well Number: 47-8510282
Permit Type: Horizontal 6A Well
Date Issued: 06/09/2016

Promoting a healthy environment.

API Number: _____

PERMIT CONDITIONS

4706510282

West Virginia Code § 22-6A-8(d) allows the Office of Oil and Gas to place specific conditions upon this permit. Permit conditions have the same effect as law. Failure to adhere to the specified permit conditions may result in enforcement action.

CONDITIONS

1. Operator shall take additional measures with this permitted activity to avoid communication with offset wells. Such additional measures are described in the attached addendum. This addendum is part of the terms of the well work permit, and includes a description of depth and completed formations of offset wells. Also included is a description of monitoring activities that will take place during fracturing operations of the permitted well work.

2. This proposed activity may require permit coverage from the United States Army Corps of Engineers (USACOE). Through this permit, you are hereby being advised to consult with USACOE regarding this proposed activity.

3. If the operator encounters an unanticipated void, or an anticipated void at an unanticipated depth, the operator shall notify the inspector within 24 hours. Modifications to the casing program may be necessary to comply with W. Va. Code § 22-6A-5a (12), which requires drilling to a minimum depth of thirty feet below the bottom of the void, and installing a minimum of twenty (20) feet of casing. Under no circumstance should the operator drill more than one hundred (100) feet below the bottom of the void or install less than twenty (20) feet of casing below the bottom of the void.

4. When compacting fills, each lift before compaction shall not be more than 12 inches in height, and the moisture content of the fill material shall be within limits as determined by the Standard Proctor Density test of the actual soils used in specific engineered fill, ASTM D698, Standard Test Method for Laboratory Compaction Characteristics of Soil Using Standard Effort, to achieve 95 % compaction of the optimum density. Each lift shall be tested for compaction, with a minimum of two tests per lift per acre of fill. All test results shall be maintained on site and available for review.

5. Operator shall install signage per § 22-6A-8g (6) (B) at all source water locations included in their approved water management plan within 24 hours of water management plan activation.

6. Oil and gas water supply wells will be registered with the Office of Oil and Gas and all such wells will be constructed and plugged in accordance with the standards of the Bureau for Public Health set forth in its Legislative rule entitled *Water Well Regulations,* 64 C.S.R. 19. Operator is to contact the Bureau of Public Health regarding permit requirements. In lieu of plugging, the operator may transfer the well to the surface owner upon agreement of the parties. All drinking water wells within fifteen hundred feet of the water supply well shall be flow tested by the operator upon request of the drinking well owner prior to operating the water supply well.

API Number: _____

PERMIT CONDITIONS 47-085-10282

7. Pursuant to the requirements pertaining to the sampling of domestic water supply wells/springs the operator shall, no later than thirty (30) days after receipt of analytical data provide a written copy to the Chief and any of the users who may have requested such analyses.

8. If any explosion or other accident causing loss of life or serious personal injury occurs in or about a well or well work on a well, the well operator or its contractor shall give notice, stating the particulars of the explosion or accident, to the oil and gas inspector and the Chief, within 24 hours of said accident.

9. During the casing and cementing process, in the event cement does not return to the surface, the oil and gas inspector shall be notified within 24 hours.

10. The operator shall provide to the Office of Oil and Gas the dates of each of the following within 30 days of their occurrence: completion of construction of the well pad, commencement of drilling, cessation of drilling, completion of any other permitted well work, and completion of the well. Such notice shall be provided by sending an email to DEPOOGNotify@wv.gov.

WW-6B
(04/15)

API NO. 47- 85 - 10282
OPERATOR WELL NO. 515874
Well Pad Name: PEN54

STATE OF WEST VIRGINIA
DEPARTMENT OF ENVIRONMENTAL PROTECTION, OFFICE OF OIL AND GAS
WELL WORK PERMIT APPLICATION

1) Well Operator:	EQT Production Company	306686	Ritchie	Clay	Pennsboro
		Operator ID	County	District	Quadrangle

2) Operator's Well Number: 515874 Well Pad Name: PEN54

3) Farm Name/Surface Owner: Jerry Morton et al Public Road Access: RT50

4) Elevation, current ground: 1,016 Elevation, proposed post-construction: 1,016

5) Well Type (a) Gas x Oil _____ Underground Storage _____
Other _____
(b)If Gas Shallow x Deep _____
Horizontal x

Michael Daff 5/20/16

6) Existing Pad: Yes or No Yes

7) Proposed Target Formation(s), Depth(s), Anticipated Thickness and Expected Pressure(s):
Marcellus, 6297', 49', 2190 PSI Top of Marcellus 6275

8) Proposed Total Vertical Depth: 6297

9) Formation at Total Vertical Depth: Marcellus

10) Proposed Total Measured Depth: 14201

11) Proposed Horizontal Leg Length: 5940

12) Approximate Fresh Water Strata Depths: 99, 105, 302, 627, 770

13) Method to Determine Fresh Water Depths: By Offset wells 4708510282

14) Approximate Saltwater Depths: 1350

15) Approximate Coal Seam Depths: 326, 789, 867, 1078, 1182

16) Approximate Depth to Possible Void (coal mine, karst, other): None reported

17) Does Proposed well location contain coal seams directly overlying or adjacent to an active mine? Yes _____ No x

(a) If Yes, provide Mine Info: Name: _____
Depth: _____
Seam: _____
Owner: _____

Received
Office of Oil & Gas
MAY 27 2016

WW-6B
(04/15)

4708510282

API NO. 47- 85 -
OPERATOR WELL NO. 515874
Well Pad Name: PEN54

18) **CASING AND TUBING PROGRAM**

TYPE	Size (in)	New or Used	Grade	Weight per ft. (lb/ft)	FOOTAGE: For Drilling (ft)	INTERVALS: Left in Well (ft)	CEMENT: Fill-up (Cu. Ft.)/CTS
Conductor	20	New	A-500	78.6	40	40	60 ft^3 / CTS
Fresh Water	13 3/8	New	J-55	54.5	900	900	827 ft^3 / CTS
Coal							
Intermediate	9 5/8	New	P-110	40	5205	5205	2048 ft^3 / CTS
Production	5 1/2	New	P-110	20	14201	14201	TOC is 500' above top producing zone
Tubing	2 3/8		J-55	4.7		May not be run, if run set 40' above top perf or 80° inclination	
Liners							

MAC
5/26/16

TYPE	Size (in)	Wellbore Diameter (in)	Wall Thickness (in)	Burst Pressure (psi)	Anticipated Max. Internal Pressure (psi)	Cement Type	Cement Yield (cu. ft./k)
Conductor	20	26	.375	1378	1102	Class A	1.18
Fresh Water	13 3/8	17 1/2	.38	2700	2160	See Variance	1.19
Coal							
Intermediate	9 5/8	12 3/8	.395	7900	6320	See Variance	1.19
Production	5 1/2	8 1/2	.361	12640	10112	Class H	1.07/1.86
Tubing	2 3/8	NA	.19	7700			
Liners							

PACKERS

4708510282

Kind:				
Sizes:				
Depths Set:				

Received
Office of Oil & Gas
MAY 27 2016

WW-6B
(10/14)

API NO. 47- 85 - 4708510282
OPERATOR WELL NO. 515874
Well Pad Name: PEN54

MAC
5/24/16

19) Describe proposed well work, including the drilling and plugging back of any pilot hole:

Drill and complete a new horizontal well in the Marcellus Formation. Drill the vertical to an approximate depth of 4362'. Kick off and drill curve. Drill the lateral in the Marcellus. Cement casing.

20) Describe fracturing/stimulating methods in detail, including anticipated max pressure and max rate:

Hydraulic fracturing is completed in accordance with state regulations using water recycled from previously fractured wells and obtained from freshwater sources. This water is mixed with sand and a small percentage (less than 0.3%) of chemicals (including 15% Hydrochloric acid, gelling agent, gel breaker, friction reducer, biocide, and scale inhibitor), referred to in the industry as a "slickwater" completion. Maximum anticipated internal casing pressure is expected to be approximately 10000 psi, maximum anticipated treating rates are expected to average approximately 100 bpm. Stage lengths vary from 150 to 300 feet. Average approximately 200,000 barrels of water per stage. Sand sizes vary from 100 mesh to 20/40 mesh. Average approximately 200,000 pounds of sand per stage.

21) Total Area to be disturbed, including roads, stockpile area, pits, etc., (acres): 52.03

22) Area to be disturbed for well pad only, less access road (acres): 21.5

23) Describe centralizer placement for each casing string:

- Surface: Bow spring centralizers – One at the shoe and one spaced every 500'.
- Intermediate: Bow spring centralizers– One at the shoe and one spaced every 500'.
- Production: One solid body centralizer spaced every joint from production casing shoe to KOP

24) Describe all cement additives associated with each cement type:

Conductor: Class A no additives
Surface (Type 1 Cement): 0-3% Calcium Chloride Used to speed the setting of cement slurries. .25% Flake Loss Circulation Material (LCM) is used to combat the loss of the cement slurry to a thief zone.
Intermediate (Type 1 Cement): 0-3% Calcium Chloride. Salt is used in shallow, low temperature formations to speed the setting of cement slurries. 0.25% flake. Loss Circulation Material (LCM) is used to combat the loss of whole drilling fluid or cement slurry (not filtrate) to a thief zone.
Production: Lead (Type H Cement): 0.2% CD-20 (dispersant makes cement easier to mix). .15% SuperFL-300 (fluid loss/lengthens thickening time). .15% SEC-10 (fluid loss). 50 50 POZ (extender)
Tail (Type H Cement): 0.2% Super CR-1 (Retarder). Lengthens thickening time. .3% Super FL-200 (fluid loss). 2% SEC-10 (Fluid loss). 2% SuperFL-350 (fluid loss). Reduces amount of water lost to formation. 60 % Calcuim Carbonate. Acid solubility

4708510282

25) Proposed borehole conditioning procedures:

Surface: Circulate hole clean while rotating & reciprocating the drill string until cuttings diminish at surface.
Intermediate: Circulate hole clean while rotating & reciprocating the drill string until cuttings diminish at surface.
Production: Pump marker sweep with nut plug to determine actual hole washout. Calculate a gauge holes bottoms up volume. Perform a cleanup cycle by pumping 3-5 bottoms up or until the shakers are clean. Check volume of cuttings coming across the shakers every 15 minutes.

Received
Office of Oil & Gas
MAY 27 2016

*Note: Attach additional sheets as needed.

Well 515874(PEN54H8)

EQT Production

Pennsboro Quad Quad

Ritchie County, WV

Azimuth 342

Vertical Section 7432

Note: Diagram is not to scale

Formations	Top TVD	Base TVD
Conductor	40	
Base Fresh Water	770	
Surface Casing	900	
Base Red Rock	1163	
Maxton	1660	1774
Big Lime	1867	2007
Weir	2262	2366
Gantz	2474	2821
Fifty foot	2616	2636
Thirty foot	2679	2703
Gordon	2726	2766
Forth Sand	2816	2827
Bayard	2947	3350
Warren	3350	3417
Speechley	3429	3486
Balltown A	3949	3988
Riley	4469	4514
Benson	4982	5023
Alexander	5102	5126
Intermediate Casing	5176	
Sonyea	6016	6119
Middlesex	6119	6175
Genesee	6175	6224
Geneseo	6224	6254
Tully	6254	6269
Hamilton	6269	6275
Marcellus	6275	6324
Production Casing	14201	MD
Onondaga	6324	

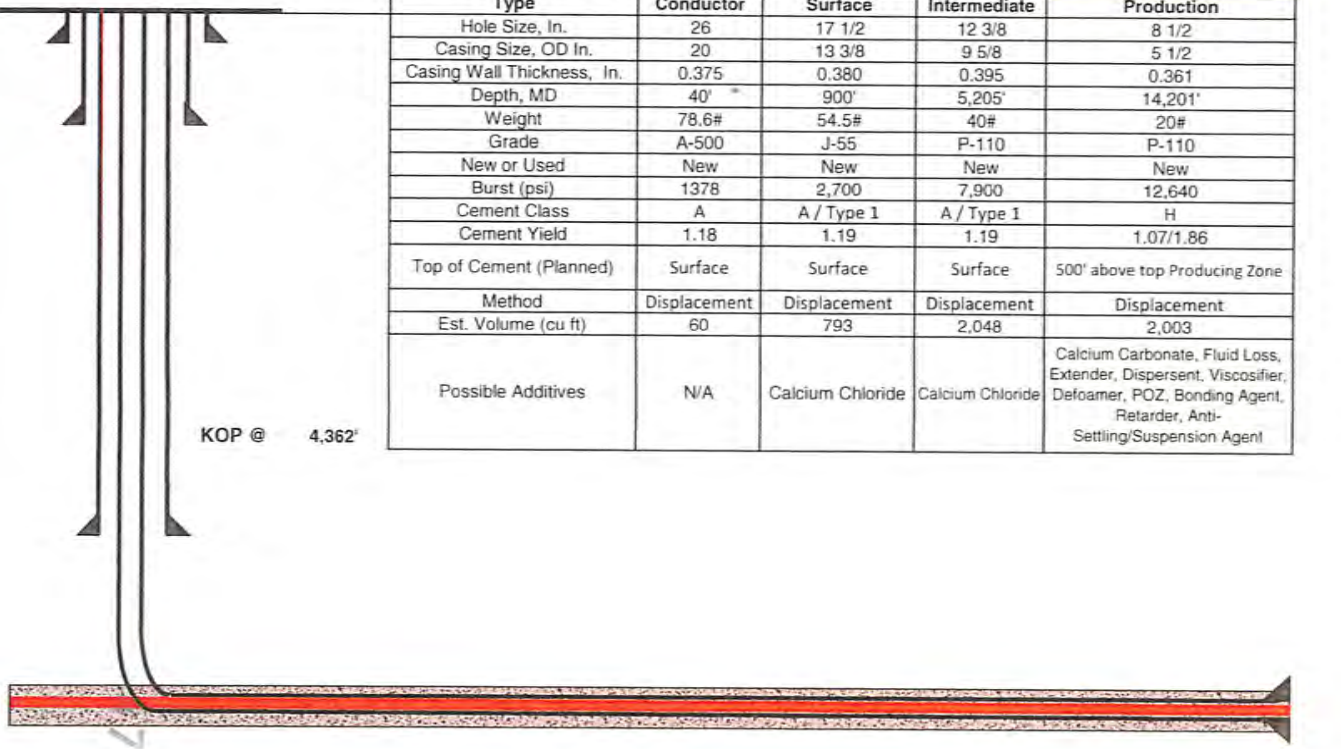

Casing and Cementing			Deepest Fresh Water: 770'	
Type	Conductor	Surface	Intermediate	Production
Hole Size, In.	26	17 1/2	12 3/8	8 1/2
Casing Size, OD In.	20	13 3/8	9 5/8	5 1/2
Casing Wall Thickness, In.	0.375	0.380	0.395	0.361
Depth, MD	40'	900'	5,205'	14,201'
Weight	78.6#	54.5#	40#	20#
Grade	A-500	J-55	P-110	P-110
New or Used	New	New	New	New
Burst (psi)	1378	2,700	7,900	12,640
Cement Class	A	A / Type 1	A / Type 1	H
Cement Yield	1.18	1.19	1.19	1.07/1.86
Top of Cement (Planned)	Surface	Surface	Surface	500' above top Producing Zone
Method	Displacement	Displacement	Displacement	Displacement
Est. Volume (cu ft)	60	793	2,048	2,003
Possible Additives	N/A	Calcium Chloride	Calcium Chloride	Calcium Carbonate, Fluid Loss, Extender, Dispersent, Viscosifier, Defoamer, POZ, Bonding Agent, Retarder, Anti-Settling/Suspension Agent

Proposed Well Work:
Drill and complete a new horizontal well in the Marcellus formation.
Drill the vertical to an approximate depth of 4362'.
Kick off and drill curve. Drill lateral in the Marcellus. Cement casing.

Received
Office of Oil & Gas
MAY 27 2011
4708510282
MAG
5/26/12
4708510282

west virginia department of environmental protection

Office of Oil and Gas
601 57th Street, SE
Charleston, WV 25304
(304) 926-0450
(304) 926-0452 fax

Earl Ray Tomblin, Governor
Randy C. Huffman, Cabinet Secretary
dep.wv.gov

March 18, 2014

Nabors Completion & Production Services Company
1380 Route 286 Hwy E #121
Indiana PA 15701

Re: Cement Variance Request

Dear Sir or Madam,

This agency is approving a variance request for the cement blend listed below to be used on surface and coal protection strings for the drilling of oil and gas wells in the state of West Virginia. The variance cannot be used without requesting its use on a permit application and approval by this agency:

- Type 1 (2% Calcium Chloride-Accelerator, 0.25% Super Flake-Lost Circulation, 5.2% Water, 94% Type "1" Cement)

If you have any questions regarding this matter feel free to contact me at 304-926-0499, ext. 1653.

Sincerely,

James Peterson by GCS

James Peterson
Environmental Resources Specialist / Permitting

4708510282

Received
Office of Oil & Gas
MAY 27 2016

west virginia department of environmental protection

Office of Oil and Gas
601 57th Street, SE
Charleston, WV 25304
(304) 926-0450
(304) 926-0452 fax

Earl Ray Tomblin, Governor
Randy C. Huffman, Cabinet Secretary
dep.wv.gov

BEFORE THE OFFICE OF OIL AND GAS
DEPARTMENT OF ENVIRONMENTAL PROTECTION
STATE OF WEST VIRGINIA

IN THE MATTER OF A VARIANCE FROM	)	**ORDER NO. 2014 - 17**
REGULATION 35 CSR § 4-11.4/11.5/14.1	)	
AND 35 CSR § 8-9.2.h. 4/5/6/8 OF THE	)	
THE OPERATIONAL	)	
REGULATIONS OF CEMENTING OIL	)	
AND GAS WELLS	)	

REPORT OF THE OFFICE

Nabors Completion & Production Services Co. requests approval of a different cement blend for use in cementing surface and coal protection casing of oil and gas wells.

FINDINGS OF FACT

1.) Nabors Completion & Production Services Co. proposes the following cement blend:

- 2% Calcium Chloride (Accelerator)
- 0.25 % Super Flake (Lost Circulation)
- 94% Type "1" Cement
- 5.20 % Water

2.) Laboratory testing results indicate that the blend listed in Fact No.1 will achieve a 500 psi compressive strength within 6 hours and a 2,435 psi compressive strength within 24 hours.

4708510282

Received
Office of Oil & Gas
MAY 27 2016

CONCLUSIONS OF LAW

Pursuant to Articles 6 and 6A, Chapter 22 of the Code of West Virginia, the Office of Oil and Gas has jurisdiction over the subject matter embraced in said notice, and the persons interested therein, and jurisdiction to promulgate the hereinafter prescribed Order.

Pursuant to 35 CSR § 4-11.5 and 35 CSR § 8-9.2.h.8 the Chief of the Office of Oil and Gas may approve different cement blends upon the well operator providing satisfactory proof that different cement types are adequate.

ORDER

It is ordered that Nabors Completion & Production Services Co. may use the cement blend listed in Findings of Fact No.1 for the cementing of surface and coal protection casing of oil and gas wells in the State as may be requested by oil and gas operators. The waiting time on the cement blend shall be **8** hours. The cement blend shall be mixed in strict accordance with the specifications for each blend and weight measurements made on-site to assure the cement slurries meet the minimum weight specifications. A sample shall be collected and, if after **8** hours the cement is not set up, additional time will be required. Nabors Completion & Production Services Co. shall keep a record of cement blend jobs in which the cement blend approved under this order is to be used and made available to the Office of Oil and Gas upon request.

Dated this, the 18th day of March, 2014.

IN THE NAME OF THE STATE OF WEST VIRGINIA

OFFICE OF OIL AND GAS
DEPARTMENT OF ENVIRONMENTAL PROTECTION
OF THE STATE OF WEST VIRGINIA

James Martin, Chief
Office of Oil and Gas

4708510282

Received
Office of Oil & Gas
MAY 27 2016

4708510282

WW-9
(2/15)

API Number 47 - 85 -

Operator's Well No. 515874

STATE OF WEST VIRGINIA
DEPARTMENT OF ENVIRONMENTAL PROTECTION
OFFICE OF OIL AND GAS

FLUIDS/ CUTTINGS DISPOSAL & RECLAMATION PLAN

Operator Name EQT Production Company OP Code 306686

Watershed (HUC 10) North Fork Hughes River Quadrangle Pennsboro

Do you anticipate using more than 5,000 bbls of water to complete the proposed well work? Yes ☑ No ☐

Will a pit be used? Yes ☑ No ☐

If so, please describe anticipated pit waste: Flowback water and residual solids

Will a synthetic liner be used in the pit? Yes ☑ No ☐ If so, what ml.? 60 MAG 3/9/2016

Proposed Disposal Method For Treated Pit Wastes:

- ☐ Land Application
- ■ Underground Injection (UIC Permit Number 0014, 8462, 4037)
- ■ Reuse (at API Number Various)
- ■ Off Site Disposal (Supply form WW-9 for disposal location)
- ☐ Other (Explain)

Will closed loop system be used? If so, describe: Yes, The closed loop system will remove drill cuttings from the drilling fluid. The drill cuttings are then prepared for transportation to an off-site disposal facility.

Drilling medium anticipated for this well (vertical and horizontal)? Air, freshwater, oil based, etc. See Attached

-If oil based, what type? Synthetic, petroleum, etc. Synthetic Mud

Additives to be used in drilling medium? See Attached

Drill cuttings disposal method? Leave in pit, landfill, removed offsite, etc. Landfill

-If left in pit and plan to solidify what medium will be used? (cement, lime, sawdust) N/A

-Landfill or offsite name/permit number? See Attached List

Permittee shall provide written notice to the Office of Oil and Gas of any load of drill cuttings or associated waste rejected at any West Virginia solid waste facility. The notice shall be provided within 24 hours of rejection and the permittee shall also disclose where it was properly disposed.

I certify that I understand and agree to the terms and conditions of the GENERAL WATER POLLUTION PERMIT issued on August 1, 2005, by the Office of Oil and Gas of the West Virginia Department of Environmental Protection. I understand that the provisions of the permit are enforceable by law. Violations of any term or condition of the general permit and/or other applicable law or regulation can lead to enforcement action.

I certify under penalty of law that I have personally examined and am familiar with the information submitted on this application form and all attachments thereto and that, based on my inquiry of those individuals immediately responsible for obtaining the information, I believe that the information is true, accurate, and complete. I am aware that there are significant penalties for submitting false information, including the possibility of fine or imprisonment.

Company Official Signature

Company Official (Typed Name) Victoria J. Roark

Company Official Title Permitting Supervisor

RECEIVED
Office of Oil and Gas
MAR 25 2016
WV Department of Environmental Protection

Subscribed and sworn before me this 3 day of March, 20 16

Rebecca L. Wanstreet Notary Public

My commission expires 4-7-20

OFFICIAL SEAL
NOTARY PUBLIC
STATE OF WEST VIRGINIA
REBECCA L. WANSTREET
EQT PRODUCTION COMPANY
PO BOX 280
BRIDGEPORT, WV 26330
My commission expires April 07, 2020

Form WW-9

4708510282

Operator's Well No. 515874

Proposed Revegetation Treatment: Acres Disturbed 52.03 Prevegetation pH 6.2

Lime 3 Tons/acre or to correct to pH 6.5

4708510282

Fertilizer type Granular 10-20-20

Fertilizer amount 1/3 lbs/acre

Mulch 2 Tons/acre

Seed Mixtures

Temporary		Permanent	
Seed Type	lbs/acre	Seed Type	lbs/acre
KY-31	40	Orchard Grass	15
Alsike Clover	5	Alsike Clover	5
Annual Rye	15		

Attach:
Drawing(s) of road, location, pit and proposed area for land application (unless engineered plans including this info have been provided)

Photocopied section of involved 7.5' topographic sheet.

Plan Approved by: Michael Duff

Comments: Preseed & mulch any disturbed areas per WVDEP regulations. Maintain & upgrade E-n-S as necessary.

Title: Oil & Gas Inspector Date: 3/9/2016

Field Reviewed? ( ) Yes (✓) No

RECEIVED
Office of Oil and Gas
MAR 25 2016
WV Department of
Environmental Protection

4708510282

WW-9

Drilling medium anticipated for this well (vertical and horizontal)? Air, freshwater, oil based, etc.

- Air is used to drill the top-hole sections of the wellbore (surface, intermediate, and pilot). Water based mud may be necessary depending on hole conditions to stabilize and drill the intermediate section. The pilot hole, curve, and lateral sections will be drilled with either air, water based mud, or oil based mud.

Additives to be used in drilling medium?

- Air - biodegradable oil lubricant, detergent, defoaming, water. Water based mud – Barite, viscosifer, alkalinity control, lime, filtration control, deflocculates, biodegradable oil lubricant, defoaming, walnut shell, salt, x-cide, carbonates. Oil based mud – synthetic base oil, emulsifier, salt, lime, viscosifer, alkalinity control, filtration control, deflocculates, biodegradable oil lubricant, defoaming, carbonates.

RECEIVED
Office of Oil and Gas
MAR 04 2016
WV Department of
Environmental Protection

EQT Production Water plan
Offsite disposals for Marcellus wells

4708510282

CWS TRUCKING INC.
P.O. Box 391
Williamstown, WV 26187
740-516-3586
Noble County/Noble Township
Permit # 3390

LAD LIQUID ASSETS DISPOSAL INC.
226 Rankin Road
Washington, PA 15301
724-350-2760
724-222-6080
724-229-7034 fax
Ohio County/Wheeling
Permit # USEPA WV 0014

TRI COUNTY WASTE WATER MANAGEMENT, INC.
1487 Toms Run Road
Holbrook, PA 15341
724-627-7178 Plant
724-499-5647 Office
Greene County/Waynesburg
Permit # TC-1009

Waste Management - Meadowfill Landfill
Rt. 2, Box 68 Dawson Drive
Bridgeport, WV 26330
304-326-6027
Permit #SWF-1032-98
Approval #100785WV

Waste Management - Northwestern Landfill
512 E. Dry Road
Parkersburg, WV 26104
304-428-0602
Permit #SWF-1025 WV-0109400
Approval #100833WV

BROAD STREET ENERGY LLC
37 West Broad Street
Suite 1100
Columbus, Ohio 43215
740-516-5381
Washington County/Belpre Twp.
Permit # 8462

TRIAD ENERGY
P.O. Box 430
Reno, OH 45773
740-516-6021 Well
740-374-2940 Reno Office Jennifer
Nobel County/Jackson Township
Permit # 4037

KING EXCAVATING CO.
Advanced Waste Services
101 River Park Drive
New Castle, Pa. 16101
Facility Permit# PAR000029132

RECEIVED
Office of Oil and Gas
MAR 04 2016
WV Department of
Environmental Protection

4708510282

FLANAGAN LEASE
PEN54 WELL NO.S WV 514474, WV 514475, WV 514476, WV 514477, WV 514478, WV 514479, WV 514480, WV 515874, WV 516206, WV 516207 & WV 516208

NOTE: SEE SITE PLAN PEN54 FOR COMPLETE CONSTRUCTION & EROSION & SEDIMENT CONTROL DETAILS.

SHEET 1 OF 2
SCALE: 1"=500'

0' 500' 1000'

Professional Energy Consultants
A DIVISION OF SMITHLAND SURVEYING INC
SLS SURVEYORS ENGINEERS ENVIRONMENTAL PROJECT MGMT.

DRAWN BY	FILE NO.	DATE	CADD FILE:
K.D.W.	8083	06-01-15	8083PEN54REC.dwg

TOPO SECTIONS OF PENNSBORO 7.5' TOPO QUADRANGLE

MAC 3/9/2016

RECEIVED
Office of Oil and Gas
MAR 25 2016
WV Department of Environmental Protection

47085102 82

EQT

Where energy meets innovation.™

47085

Site Specific Safety Plan

EQT PEN 54 Pad

Pennsboro Quardrant

Toll Gate
Ritchie County, WV

For Wells:

515874

Date Prepared: **February 3, 2016**

EQT Production

Permitting Supervisor
Title

3-1-16
Date

WV Oil and Gas Inspector

Title

3/9/16
Date

RECEIVED
Office of Oil and Gas
MAR 25 2016
WV Department of
Environmental Protection

4708510202
3/9/2016

Section III: Well Work

This Attached Plan will be reviewed with all employees on the work site prior to beginning their work. Any required changes will be inserted into this Plan and made a part of the Plan after being approved by WVOOG.

Documentation

A documented EQT Tailgate Safety Meeting (TSM) Form must be completed for each shift which describes the activities occurring, possible hazards and emergency contact information. Originals must be maintained and kept with the EQT OSR and filed with the well documents to serve as verification of the meeting and communication of the shift activities.

Plan Assimilation and Dissemination

- The Supervisor of Environmental and Safety - Drilling, or their designee, shall be responsible for providing a copy of this plan to the local emergency planning committee (LEPC) or county emergency services (CES) office within at least 7 days from land disturbance or well work.
  - The LEPC or CES representative will sign a receipt (See Appendices) documenting this.
- A copy of this Plan will be available in the following locations:
  - In the on-site mailbox
  - In the On-Site Drilling or Completions Specialist office.
  - West Virginia DEP Office of Oil and Gas
  - LEPC or CES
  - Office of the assigned Environmental and Safety Coordinators
  - Electronically in EQT *Well File Library* (as part of the permit document).

Personal Protective Equipment (PPE)

- At a minimum, all personnel on-site shall wear the following PPE:
  - Hardhat
  - Safety glasses with side shields
  - Hard toe boots
- Additional PPE may be required based on unique job hazards such as:
  - Flame Resistance Clothing (FRC)
  - High visibility vest
  - Hearing Protection
- Additional PPE may be assigned dependent on the site conditions and shall be the discretion of the on-site specialist and the Environmental and Safety Department.
- All additional PPE requirements will be communicated to all personnel.

MARCELLUS/ UPPER DEVONIAN REGION:

Detail of Well Work, Drilling Operations

1. Review pertinent well data.
2. MIRU drilling rig.
3. Install riser and air bowl.
4. Drill surface or mine string hole to required depth on air / foam / water based mud.
   - Surface casing must be set at least 50' and no more than 150' below the deepest freshwater unless necessary to cover workable coal seams.
   - Mine string hole will not be drilled more than 100' below base of the mine. Casing will be set below the mine and a cement basket will be placed above the mine to allow cement to be placed from the basket to surface.
5. Run casing to program depth. Centralize per requirements.
6. Cement to surface per regulation.
7. WOC 8 hrs.
8. Pressure test casing to 20% over Maximum Anticipated Surface Pressure (MASP).
9. If separate mine string was required, prepare riser for the drilling of fresh water protective hole section as follows:
   a. TIH with drilling assembly.
   b. Drill out mine string and to section TD.
   c. Run water protective string (surface casing) to prescribed depth per regulation.
   d. Cement casing to surface per regulation.

RECEIVED
Office of Oil and Gas
MAR 25 2016
WV Department of
Environmental Protection

Section V: BOP and Well Control

MAC 3/9/2016

BOP equipment and assembly installation schedule:

BOP Equipment Marcellus/Upper Devonian Region						
Size (in)	Operation	Hole Section	Type	Pressure Class	Test Pressure (psi)	Testing Frequency
13-5/8"	Drilling	Intermediate	Annular	3M	2100	Initial
13-5/8"	Drilling	Pilot	Annular	3M	2100	Initial, Weekly, Trip
13-5/8"	Drilling	Production	Annular	5M	3500	Initial,Weekly, Trip
13-5/8"	Drilling	Production	Blind	5M	4000	Initial,Weekly, Trip
13-5/8"	Drilling	Production	Pipe	5M	4000	Initial,Weekly, Trip
7-1/16"	Completions	Production	Cameron U's	5M	5000	Initial
13-5/8"	Drilling	Pilot (Onondaga Tag)	Annular	5M	4000	Initial,Weekly, Trip

BOP Equipment Utica Region						
Size (in)	Operation	Hole Section	Type	Pressure Class	Test Pressure(psi)	Testing Frequency
13-5/8"	Drilling	Intermediate	Annular	3M	2,100	Initial,Weekly, Trip
13-5/8"	Drilling	Intermediate	Pipe	5M	4,000	Initial,Weekly, Trip
13-5/8"	Drilling	Intermediate	Blind	5M	4,000	Initial,Weekly, Trip
13-5/8"	Drilling	Pilot/Production	Annular	5M	3,500	Initial,Weekly, Trip
13-5/8"	Drilling	Pilot/Production	Pipe	10M	8,000	Initial,Weekly, Trip
13-5/8"	Drilling	Pilot/Production	Blind	10M	8,000	Initial,Weekly, Trip

Utica Region

Test BOPs as follows:

- Annular to 250 psi low/2,100 psi high for 30 mins each
- All ram, choke/kill valves, TIW, IBOP and all choke manifold valves to 250 psi low/4,000 psi high for 30 mins each
- Annular to 250 psi low/3,500 psi high for 30 mins each
- All ram, choke/kill valves, TIW, IBOP and all choke manifold valves to 250 psi low/8,000 psi high for 30 mins each

4708510282

Wellhead Detail Marcellus/Upper Devonian Region

Size (in)	Type	M.A.W.P. (psi)
13-3/8" SOW x 13-5/8" 5M	Multi-bowl Well Head	5,000
13-5/8" 5M x 7-1/16 10M	Tubing Head	10,000
2-1/16" 5M	Christmas Tree	5,000

Wellhead Detail Utica Region		
Size (in.)	Type	M.A.W.P. (psi)
13-3/8" x 13-5/8" 10M	Multi-bowl Well Head	10,000
13-5/8" 10M x 7-1/16 15M	Tubing Head	15,000
2 -9/16" 10M	Christmas Tree	15,000

Well Control Trained Personnel:

- Drilling
  - EQT On-Site Specialist – 2 on rotating hitches.
  - Contract Group's – Tool Pusher & Drillers
- Completions & Production
  - EQT On-Site Specialist or Consultant

RECEIVED
Office of Oil and Gas
MAR 25 2016
WV Department of
Environmental Protection

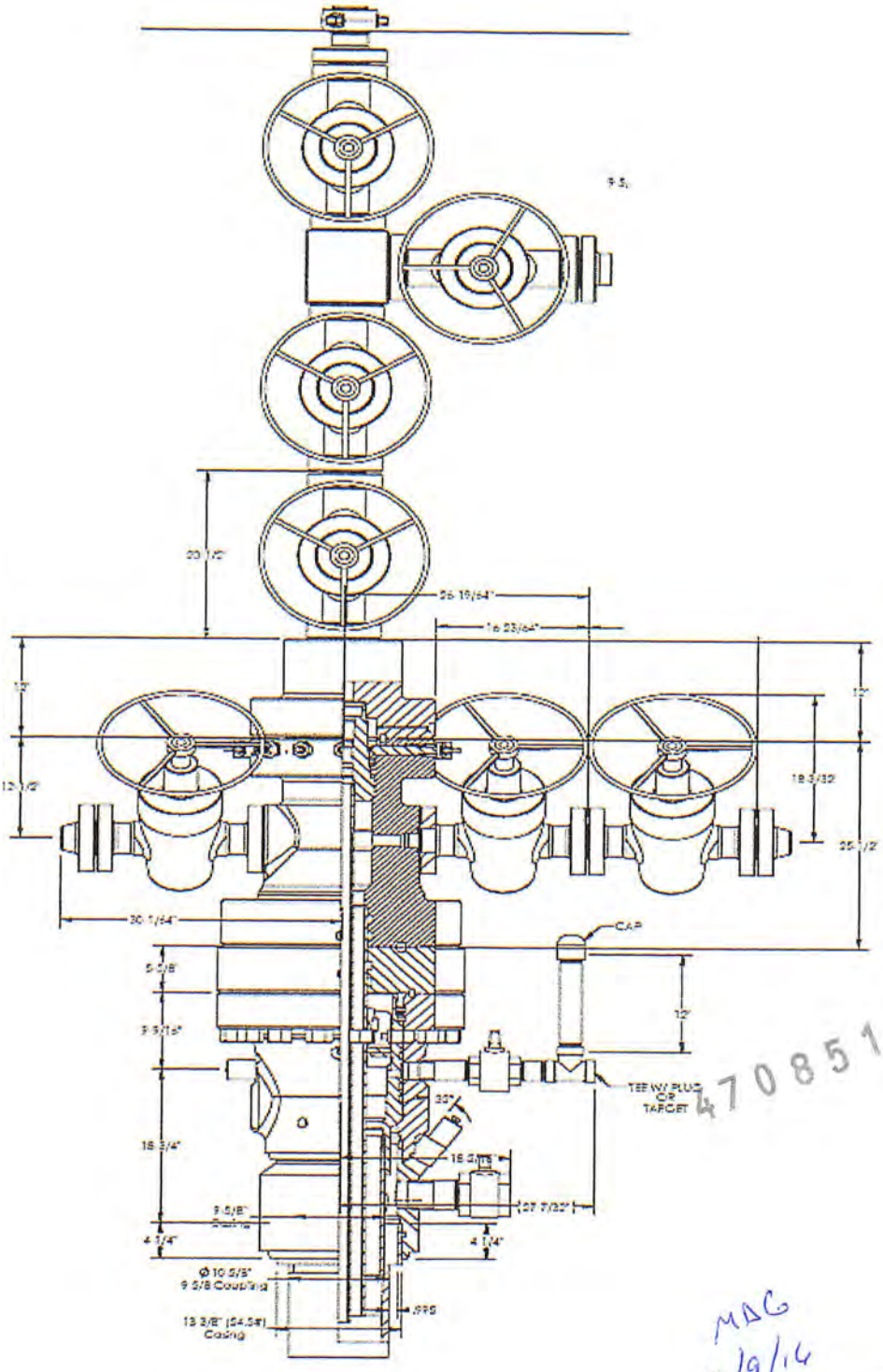

4708510282

MAC
3/9/16

RECEIVED
Office of Oil and Gas
MAR 25 2016
WV Department of
Environmental Protection

Utica Region Well Head Assembly Design

4708510282

Written Description:
Multi-bowl wellhead assembly with a 13 5/8" 10M x 13 3/8" SOW wellhead. A 13 5/8" 10M x 7 1/16" 15M DSA is used between the wellhead and tubing head. The tubing head is 7 1/16" 15M x 7 1/16" 15M. The tree is 2 9/16" 15M. Picture of stack up below.

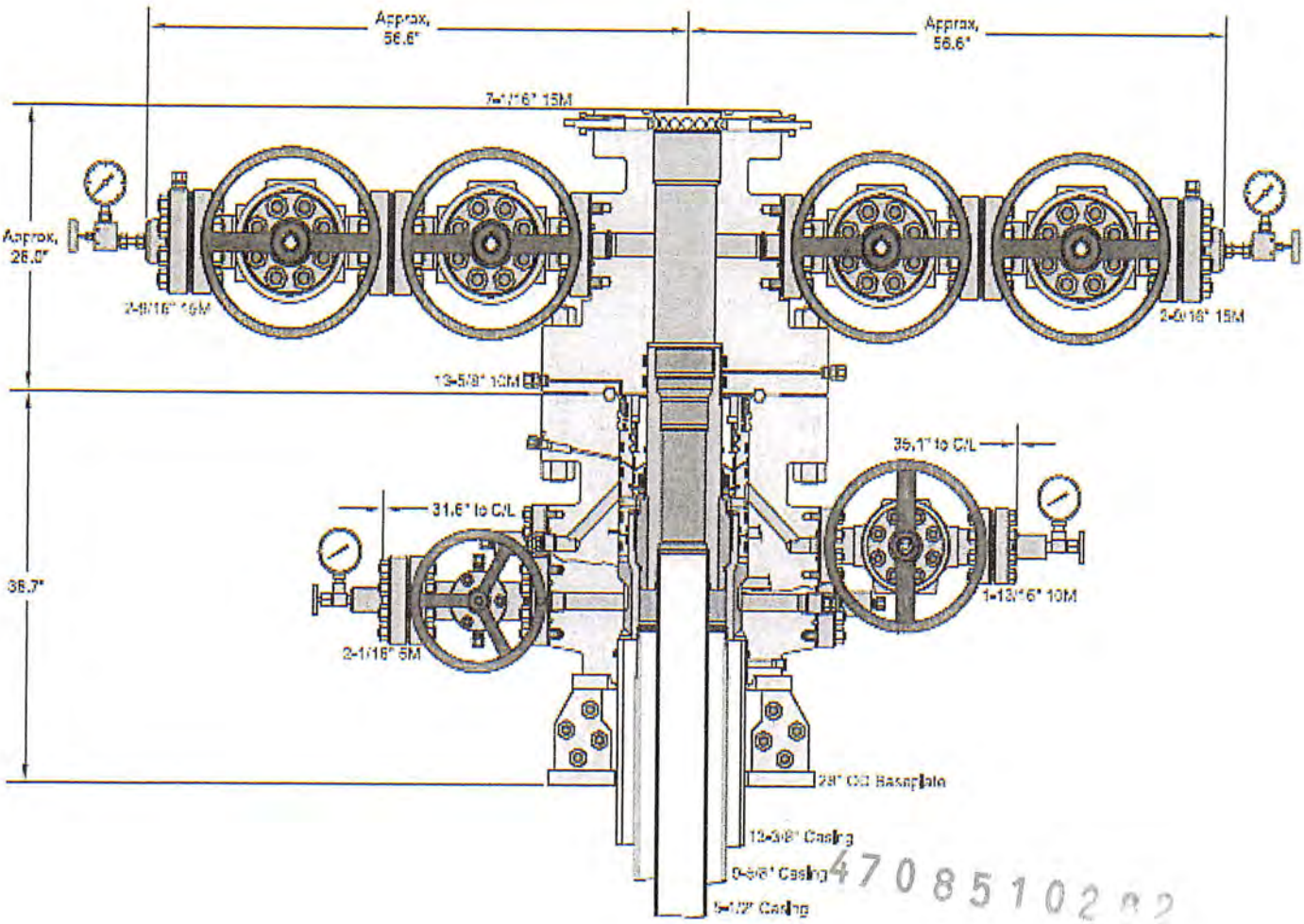

4708510282

MDG
3/9/2016

INFORMATION CONTAINED HEREIN IS THE PROPERTY OF CACTUS WELLHEAD, LLC. REPRODUCTION, DISCLOSURE OR USE THEREOF IS PERMISSIBLE ONLY AS PROVIDED BY CONTRACT OR AS EXPRESSLY AUTHORIZED BY CACTUS WELLHEAD, LLC.

CACTUS WELLHEAD LLC	EQT PRODUCTION NORTHEAST		
13-3/8" X 9-5/8" X 5-1/2" MBU-2LR Wellhead Assembly With 13-5/8" 10M x 7-1/16" 15M CTH-DBLHPS Tubing Head & 2-9/16" 15M Tubing Head Valves	DRAWN	DLE	04NOV2015
	APPRV		
	DRAWING NO	DNE0000013	

RECEIVED
Office of Oil and Gas
MAR 2 9 2016
WV Department of
Environmental Protection

Well Kill Killing Operations

In a well control situation, all influxes are to be handled using the Wait-and-Weight Method or the Driller's Method. With the Wait-and-Weight Method, the influx is circulated out while kill weight mud is simultaneously circulated down the drill pipe and up the annulus. The heavy mud is circulated to the bit at a slow kill rate, and the drill pipe pressure is maintained according to a prepared table that gives drill pipe pressure for the corresponding strokes of kill mud pumped.

The Driller's Method is accomplished in two circulations using constant drill pipe pressure and maintaining constant pump speed. The drill pipe pressure is kept constant by adjusting the choke. Once the annulus is clear of the influx, the mud weight is adjusted to kill-weight. The kill-weight mud is then circulated to the bit using constant pump speed and drill pipe pressure step-down plan. When kill-weight mud has reached the bit, the FCP is maintained until the heavy mud has reached the surface.

4708510282

RECEIVED
Office of Oil and Gas
MAR 25 2016
WV Department of
Environmental Protection

MAC
3/9/16

4708510282
MAC
3/8/2016

Section VI: Hydrogen Sulfide

Purpose

The purpose of this plan is to insure the safety of the all on-site personnel as well as those residents in close proximity. Hazards associated with the possibility of H2S encounters and the warning signs of H_2S exposure will be covered.

Scope

The policy is to consider every encounter with H_2S as potentially lethal until proven otherwise. Upon encountering H_2S, EQT employees or contractors(s) will determine the concentration of H_2S.

General Information

- Immediately upon suspicion or odor of H_2S on location the concentration shall be determined using properly functioning single or multi-gas detection devices which have a sensor calibrated to detect the presence of H_2S gas.
  - All readings should be documented along with the time they were obtained
  - All areas having a reading of greater than 10 ppm H_2S shall be evacuated until the area has been cleared of H_2S or properly trained personnel equipped with appropriate PPE arrive on location.
  - H_2S deadens the sense of smell; the presence or absence of H_2S odor is not an acceptable means for determining the presence of gas.
  - Never walk upwind or uphill towards any suspected source of H_2S; approach using a cross wind approach.
- Identify wind direction and evacuate personnel upwind and uphill of the leak; H_2S is heavier than air and will settle in low-lying areas.
- If necessary, the well will be shut in and the work will be stopped until adequate safety personnel and equipment have arrived on site.
- No work will take place until the appropriate personnel and equipment are in place.
- The primary considerations at this time will be:
  - H_2S concentration
  - Gas Volume
  - Weather Conditions
  - Dwellings in the area.

Personal Protective Equipment

47085102

- The EQT H_2S contractor will have an emergency trailer with SCBA's, additional gas detection equipment and other instrumentation and PPE required for appropriate response.
- All personnel on location; all personnel monitoring adjacent to the location; or all personnel associated with the operation, will be equipped with personal H_2S monitors.
- There will be a H_2S monitor located at the flow line exit, during the drilling of this well, as well as on the Rig Floor.
- This PPE shall be in addition to the PPE requirements listed in EQT's General Safety Policies and Procedures.

Training

- Only personnel whom have been properly trained; or are qualified in the hazards of H_2S, will be allowed on location during operations that have encountered, or projected to encounter H_2S.
- There will be a safety briefing prior to start of each shift or tower and hazards and currently readings of H_2S will be documented on a TSM or JSA.

Personnel Accountability and Briefing (Assembly) Areas

- The sign in sheet of the EQT Tailgate Safety Meeting (TSM) Form shall be used for Accountability of on-site personnel as well as visual confirmation with the current supervisor of the site. Personnel should not leave the site without first informing their immediate supervisor, Emergency Coordinator, and/or On-Site Representative (OSR).
- The sign in roster is located at: EQT Company Trailer
- Primary Assembly Area: EQT Company Trailer
- Secondary Assembly Area: Access road intersection with pad entry
- Tertiary Assembly Area: Start of the access road or a safe location chosen based on conditions.
- Specific considerations for H_2S should include:
  - Windsocks or streamers for indication of wind direction.
  - Being upwind of harmful levels of H_2S
  - Avoiding low lying areas
- Signage will be utilized along the location road, or any other entrances to the location, if H_2S is encountered.

RECEIVED
Office of Oil and Gas
MAR 25 2016
WV Department of
Environmental Protection

4708510282
MA 3/9/2016

Section VII: Collision Avoidance

4708510282

Collision avoidance is managed by utilizing gyro tools, downhole steering tools (MWD/EM), and anti-collision software by engineers. Two drilling scenarios that occur are normal pad drilling and return to pad drilling. EQT categorizes these two scenarios as such because the two scenarios utilize very different mitigation plans.

Normal pad drilling is defined when a top hole rig drills each well on the pad down to kick off point (KOP) and then a bottom hole rig moves onto the pad after the top-hole rig moves off and drills the curve and lateral sections. Normal pad drilling can also be defined when a bottom hole rig moves to a pad and drills each well on the pad from surface to TD (Grassroots Well). Normal pad drilling carries much less risk and thus does not require frequent surveying and collision avoidance maneuvers because no producing wells are present and risk of unexpected pressure or well control events are not present.

Return to pad drilling is a scenario where a top-hole rig or a bottom hole rigs returns to a pad to drill additional well(s) that currently have producing (live) wells on the pad. Return to pad drilling requires more frequent surveying and anti-collision avoidance management because producing wells are present. By utilizing good engineering well design, anti-collision software and frequent surveys, wells can safely be drilled while existing or producing wells exist on the pad.

With both normal and return to pad drilling operations, every well planned to be drilled has a surface plot diagram, 2-D plot diagram, and a pad plot diagram prepared. (Plots attached under "Collision Avoidance Diagrams") In each scenario, a continuous north seeking gyro tools, MWD/EM tools, and anti-collision processes are utilized to mitigate the risk of downhole collisions. Anti-collision processes include conformation of gyro accuracy, evaluation of anti-collision software (Compass or equivalent program), and 2-D/3-D model plotting. In both scenarios, it is EQT's standard operating procedure (SOP) for the on-site supervisor of EQT and the directional drilling company supervisor to confirm the orientation of the directional tools and ensure that the tools are orientated consistent with the directional motor's high side. When anti-collision is a risk and directional assemblies are required to navigate utilizing a gyro tool, it is EQT's SOP to use the Gyro company's muleshoe to ensure the accuracy of the gyro seat in the muleshoe. In addition, when using this muleshoe, it is EQT's SOP to have the EQT's on-site supervisor, directional drilling company supervisor, and gyro company supervisor confirm the alignment and orientation of the tool and ensure that the tools are orientated consistent with the directional motor's high side. This ensures the azimuthal direction is correct when steering the well.

Normal Pad Drilling

In this scenario, there are no existing wells on the pad. A top-hole rig will move on to the pad and drill each well to KOP and then a bottom hole rig will move on after the top hole rig finishes and drill the each well to horizontal TD. At times, the bottom hole rig may drill each well from surface to horizontal TD.

During this scenario, if two wells come within 10 feet or a separation factor of 1.5, each survey is monitored closely and anti-collision is run after each survey until the wells are clear of a collision risk. The frequency of surveys can vary from 30-500' depending on the trajectory of the wells, hole walk, and risk of collision. If a SF ≤ 1.0 or ≤ 5' separation is encountered or a collision occurs, an email notification will be sent by the EQT on-site drilling supervisor to the appropriate state inspector. In the event the proximity of wells get to a point where a collision cannot be avoided or a collision occurs, EQT will properly secure each well and evaluate the most prudent plan forward while communicating plans with the state inspector.

RECEIVED
Office of Oil and Gas
MAR 25 2016
WV Department of
Environmental Protection

Vertical Section:

Each hole is drilled to KOP by either the top-hole rig or bottom hole rig. Once KOP is achieved the final gyro survey is run. No nudges are planned.

PHOENIX TECHNOLOGY SERVICES

EQT Proc

EQT

Where energy meets innovation.

4708510282

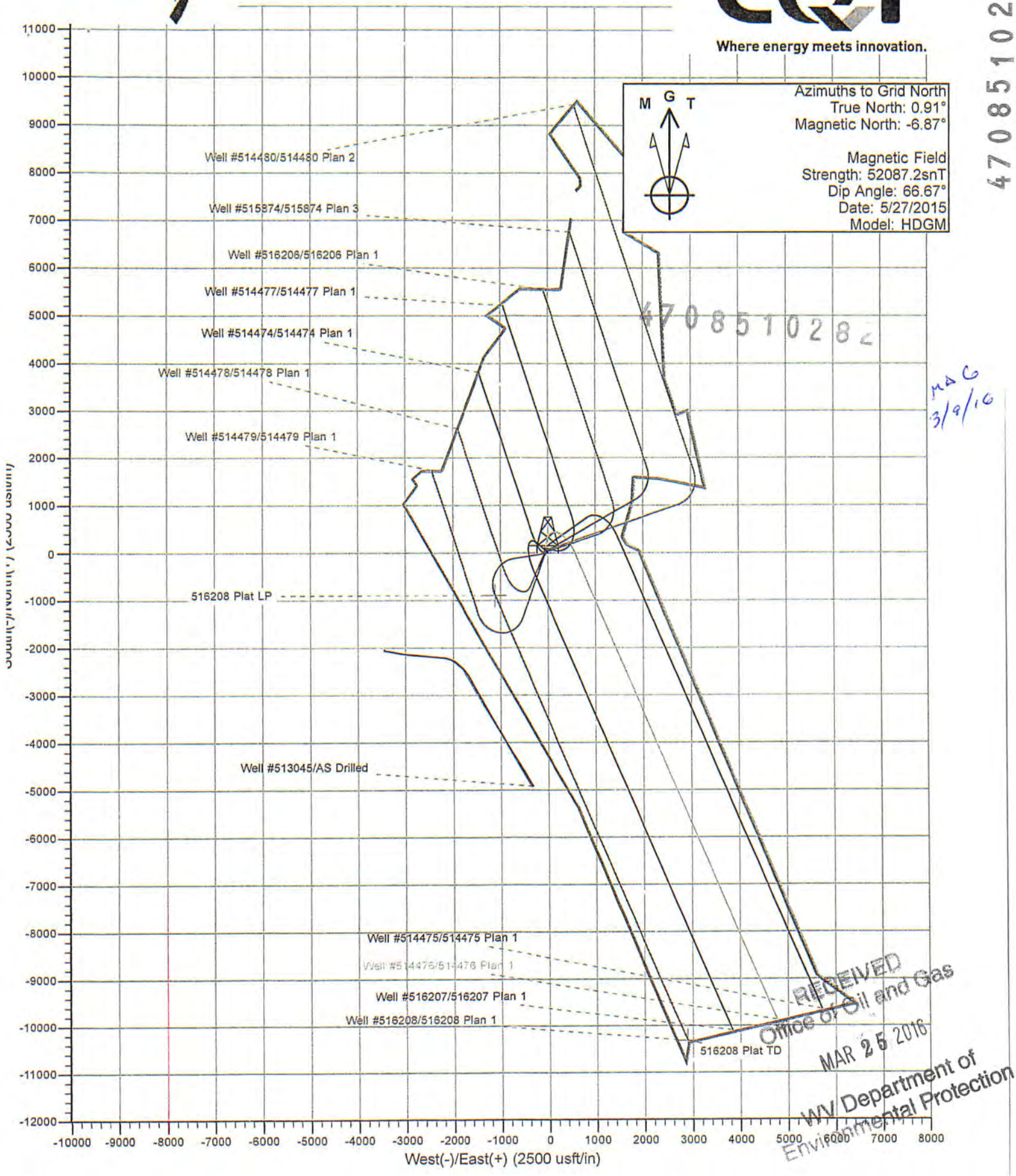

4708510282

MAC 3/9/16

RECEIVED
Office of Oil and Gas
MAR 25 2016
WV Department of
Environmental Protection

WW-6A1
(5/13)

Operator's Well No. 515874 4708510282

INFORMATION SUPPLIED UNDER WEST VIRGINIA CODE
Chapter 22, Article 6A, Section 5(a)(5)
IN LIEU OF FILING LEASE(S) AND OTHER CONTINUING CONTRACT(S)

Under the oath required to make the verification on page 1 of this Notice and Application, I depose and say that I am the person who signed the Notice and Application for the Applicant, and that –

(1) the tract of land is the same tract described in this Application, partly or wholly depicted in the accompanying plat, and described in the Construction and Reclamation Plan;

(2) the parties and recordation data (if recorded) for lease(s) or other continuing contract(s) by which the Applicant claims the right to extract, produce or market the oil or gas are as follows:

Lease Name or Number	Grantor, Lessor, etc.	Grantee, Lessee, etc.	Royalty	Book/Page
See Attached				

Acknowledgement of Possible Permitting/Approval
In Addition to the Office of Oil and Gas

The permit applicant for the proposed well work addressed in this application hereby acknowledges the possibility of the need for permits and/or approvals from local, state, or federal entities in addition to the DEP, Office of Oil and Gas, including but not limited to the following:

- WV Division of Water and Waste Management
- WV Division of Natural Resources WV Division of Highways
- U.S. Army Corps of Engineers
- U.S. Fish and Wildlife Service
- County Floodplain Coordinator

The applicant further acknowledges that any Office of Oil and Gas permit in no way overrides, replaces, or nullifies the need for other permits/approvals that may be necessary and further affirms that all needed permits/approvals should be acquired from the appropriate authority before the affected activity is initiated.

Well Operator: EQT Production Company
By:
Its: Permitting Supervisor

RECEIVED
Office of Oil and Gas
MAR 04 2016
WV Department of
Environmental Protection

FORM WW 6 SHEET 2 OF 2

PEN54
WV 515874
EQT PRODUCTION COMPANY

3,040'

LATITUDE 39°17'30"

LONGITUDE 80°55'00"

12,432'

NAD' 27 GRID NORTH

WELL TIES		
ID	BEARING	DISTANCE
L1	N 22°11' W	1989.19'
L2	N 05°10' E	3814.31'

BUILD OUT DATA		
ID	BEARING	DISTANCE
L3	N 58°20' E	2295.72'

CURVE	ARC LENGTH	RADIUS	CHORD BEARING	CHORD LENGTH
C1	637.85'	573.35'	N 12°53' E	605.46'

LATERAL		
ID	BEARING	DISTANCE
L4	N 18°00' W	3902.77'

CURVE	ARC LENGTH	RADIUS	CHORD BEARING	CHORD LENGTH
C2	162.34	3086.78'	N 15°34' W	162.32'

ID	BEARING	DISTANCE
L5	N 13°08' W	1874.80'

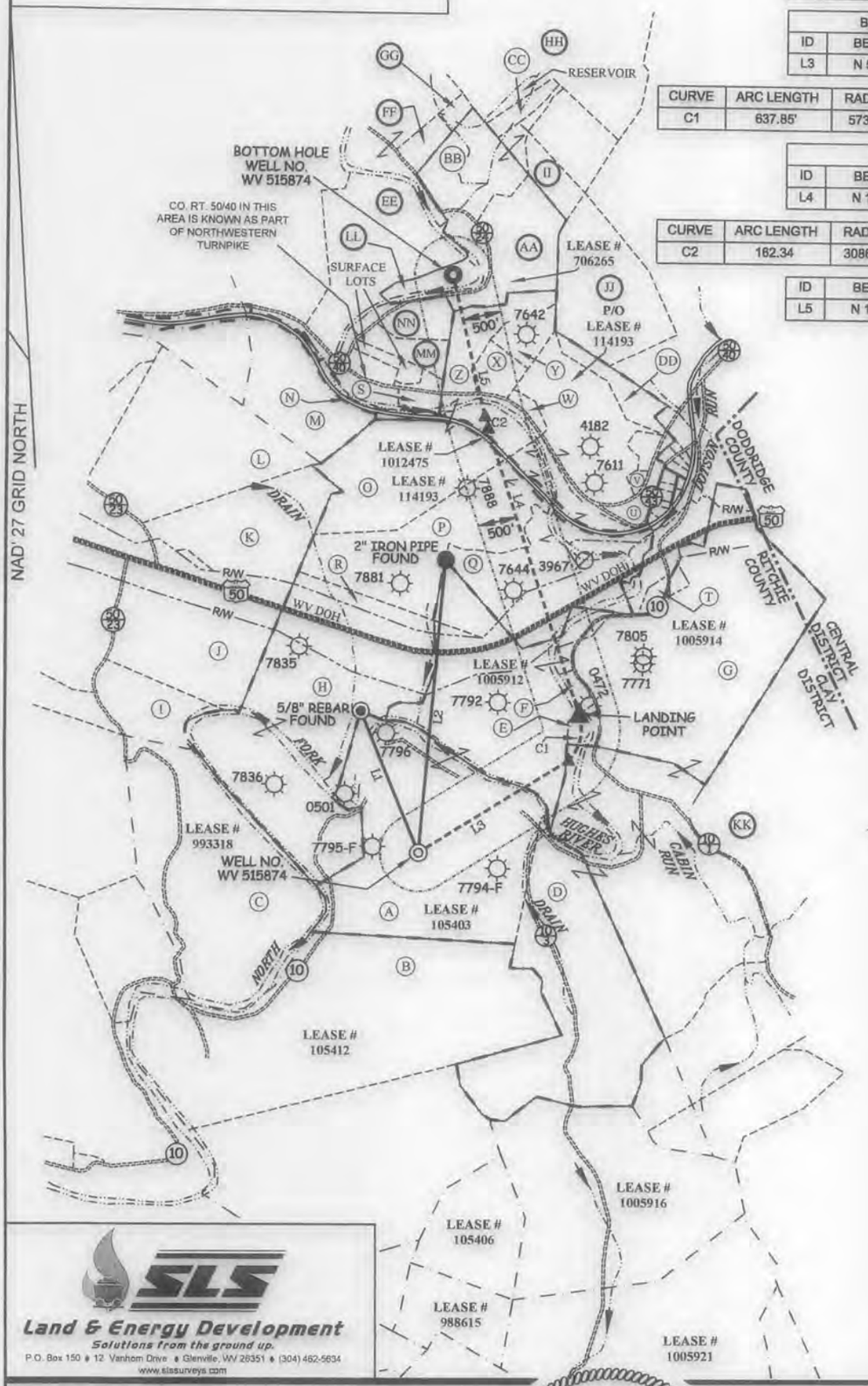

SLS
Land & Energy Development
Solutions from the ground up.
P.O. Box 150 ♦ 12 Vanhorn Drive ♦ Glenville, WV 26351 ♦ (304) 462-5634
www.slssurveys.com

(S.P.C. NORTH ZONE) (UTM(M) ZONE 17 NORTH)

NAD'27 S.P.C.(FT)	N. 279,120.12	E. 1,595,819.44
NAD'27 GEO.	LAT-(N) 39.257534	LONG-(W) 80.927403
NAD'83 UTM (M)	N. 4,345,367.53	E. 506,278.12
	LANDING POINT	
NAD'27 S.P.C.(FT)	N. 280,915.75	E. 1,597,908.20
NAD'27 GEO.	LAT-(N) 39.262554	LONG-(W) 80.920127
NAD'83 UTM (M)	N. 4,345,925.21	E. 506,905.33
	BOTTOM HOLE	
NAD'27 S.P.C.(FT)	N. 286,609.67	E. 1,596,232.79
NAD'27 GEO.	LAT-(N) 39.278112	LONG-(W) 80.926363
NAD'83 UTM (M)	N. 4,347,651.32	E. 506,365.96

EARL N. THOMPSON
LICENSED
No. 2288
STATE OF
WEST VIRGINIA
PROFESSIONAL SURVEYOR

(+) DENOTES LOCATION OF WELL ON UNITED STATES TOPOGRAPHIC MAPS.

LEGEND

- LEASE LINE
- SURFACE LINE
- WELL LATERAL
- OFFSET LINE
- TIE LINE
- CREEK
- ROAD
- RAIL ROAD
- COUNTY ROUTE
- STATE ROUTE
- PROPOSED WELL
- EXISTING WELL
- PERMITTED WELL
- CLAY DISTRICT TAX MAP–PARCEL C–00–00

COUNTY NAME

PERMIT

SCALE 1" = 2000'

DATE JUNE 24, 20 15

REVISED MAY 12, 20 16

OPERATORS WELL NO. WV 515874

API WELL NO. 47 — 085 — 10282 HGA
STATE COUNTY PERMIT

STATE OF WEST VIRGINIA
DIVISION OF
ENVIRONMENTAL PROTECTION
OFFICE OF OIL AND GAS

WELL OPERATOR EQT PRODUCTION COMPANY
ADDRESS 115 PROFESSIONAL PLACE P.O. BOX 280
BRIDGEPORT, WV 26330

DESIGNATED AGENT REX C. RAY
ADDRESS 115 PROFESSIONAL PLACE P.O. BOX 280
BRIDGEPORT, WV 26330

PEN54
WV 515874
EQT PRODUCTION COMPANY

SUBSURFACE EASEMENT		
HEARTWOOD FORESTLAND FUND IV LP	196.90 AC.±	TAX MAP 31 PARCEL 11

NOTES ON SURVEY

1. NO WATER WELLS WERE FOUND WITHIN 250' OF PROPOSED GAS WELL. NO AGRICULTURAL BUILDINGS ≥ 2500 SQ. FT. OR DWELLINGS WERE FOUND WITHIN 625' OF THE CENTER OF PROPOSED WELL PAD.
2. WELL SPOT CIRCLE & TOPO MARK SCALE IS 1"=2000'

A	JERRY MORTON ET AL	243.50 ACRES±	TM C-31-05
B	HEARTWOOD FORESTLAND FUND IV LP	185.3 ACRES±	TM C-31-14
C	DONALD & BARBARA DEEM	133.07 ACRES±	TM C-31-10
D	HEARTWOOD FORESTLAND FUND IV LP	196.90 ACRES±	TM C-31-11
E	ROGER SATTERFIELD	3 ACRES±	TM C-31-5.2
F	JOSEPH FLANAGAN ET AL	2.5 ACRES±	TM C-31-5.3
G	ANTERO TREATMENT LLC	175.85 ACRES±	TM C-31-6
H	JUDITH & JO ANN ROBINSON	106.265 ACRES±	TM C-31-22
I	VIRGINIA COTTRILL	25.5 ACRES±	TM C-31-04
J	VIRGINIA COTTRILL	55.73 ACRES±	TM C-26-56.2
K	VIRGINIA COTTRILL	57.63 ACRES±	TM C-26-56.1
L	VIRGINIA COTTRILL	84.35 ACRES±	TM C-26-56
M	WV RAILROAD MAINTENANCE AUTHORITY	48.14 ACRES±	TM C-26-19
N	WV RAILROAD MAINTENANCE AUTHORITY	P/O 1141.03 ACRES±	TM C-26-X
O	ROY & LINDA HAMMOND	77.088 ACRES±	TM C-26-57
P	JANICE WILLIAMS	111.876 ACRES±	TM C-26-58.9
Q	EQT PRODUCTION COMPANY	46.63 ACRES±	TM C-26-58
R	JANICE WILLIAMS	1.715 ACRES±	TM C-26-58.2
S	EUSTACE LAMM ET AL	2.28 ACRES±	TM C-26-20.1
T	EARL DAUGHERTY	1.80 ACRES±	TM C-26-52.1
U	JEAN & KRISTINE KNUTSEN	5.34 ACRES±	TM C-26-58.3
V	KATRINA DOTSON	1.01 ACRES±	TM C-26-58.4
W	KEVIN & MICHELE ESTEP	2.912 ACRES±	TM C-26-57.1
X	BRIAN & JULIE RICHEY	7.69 ACRES±	TM C-26-58.8
Y	FERYL & MAHLON HARRIS	8.38 ACRES±	TM C-26-58.1
Z	FERYL & MAHLON HARRIS	16.62 ACRES±	TM C-26-58.6
AA	WILLIAM & JANET BROADWATER	37.565 ACRES±	TM C-26-12
BB	CITY OF PENNSBORO	25.246 ACRES±	TM C-26-12.1
CC	CITY OF PENNSBORO	4.778 ACRES±	TM C-26-5.1
DD	MOUNTVIEW CONFERENCE CHURCH	10.41 ACRES±	TM C-26-58.5
EE	TODD G. GILLENWATER	65 ACRES±	TM C-26-11
FF	TERRY & JANET HALL	5.71 ACRES±	TM C-26-4.4
GG	CITY OF PENNSBORO	2.625 ACRES±	TM C-26-4.3
HH	P.M. MANAGEMENT COMPANY	83.022 ACRES±	TM C-26-05
II	WILLIAM & JANET BROADWATER	8.203 ACRES±	TM C-26-4.1
JJ	WILLIAM & JANET BROADWATER	50 ACRES±	TM C-26-4.2
KK	CAROL COGAR ET AL	172.44 ACRES±	TM C-32-01
LL	TODD G. GILLENWATER	10.18 ACRES±	TM C-26-11.1
MM	CARLA POLING ET AL	5.4 ACRES±	TM C-26-23
NN	CARLA POLING ET AL	11.43 ACRES±	TM C-26-22

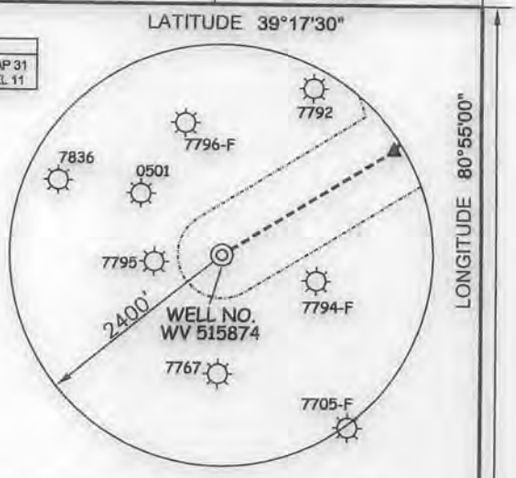

(S.P.C. NORTH ZONE) (UTM(M) ZONE 17 NORTH)

NAD'27 S.P.C.(FT)	N. 279,120.12	E. 1,595,819.44
NAD'27 GEO.	LAT-(N) 39.257534	LONG-(W) 80.927403
NAD'83 UTM (M)	N. 4,345,367.53	E. 506,278.12
	LANDING POINT	
NAD'27 S.P.C.(FT)	N. 280,915.75	E. 1,597,908.20
NAD'27 GEO.	LAT-(N) 39.262554	LONG-(W) 80.920127
NAD'83 UTM (M)	N. 4,345,925.21	E. 506,905.33
	BOTTOM HOLE	
NAD'27 S.P.C.(FT)	N. 286,609.67	E. 1,596,232.79
NAD'27 GEO.	LAT-(N) 39.278112	LONG-(W) 80.926363
NAD'83 UTM (M)	N. 4,347,651.32	E. 506,365.96

REFERENCES

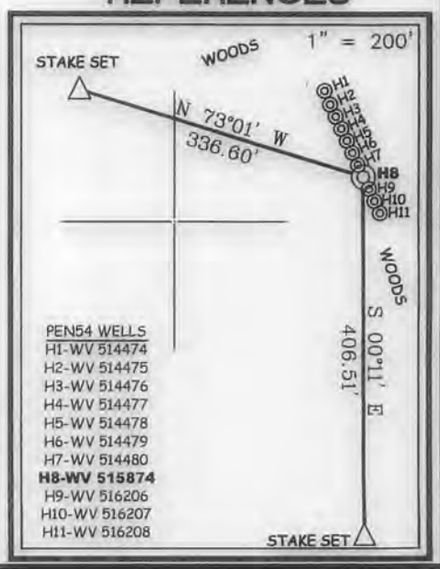

ROYALTY OWNERS		
GUY FLANNAGAN ET AL	126 AC.±	LEASE NO. 1005912
MARY LEE AZELVANDRE ET AL	500 AC.±	LEASE NO. 114193
WEST VIRGINIA RAIL AUTHORITY	24.30 AC.±	LEASE NO. 1012475
CAROL A. MARSH	72 AC.±	LEASE NO. 706265

SLS
Land & Energy Development
Solutions from the ground up.
P.O. Box 150 ♦ 12 Vanhorn Drive ♦ Glenville, WV 26351 ♦ (304) 462-5634
www.slssurveys.com

I THE UNDERSIGNED, HEREBY CERTIFY THAT THIS PLAT IS CORRECT TO THE BEST OF MY KNOWLEDGE AND BELIEF AND SHOWS ALL THE INFORMATION REQUIRED BY LAW AND THE REGULATIONS ISSUED AND PRESCRIBED BY THE DIVISION OF ENVIRONMENTAL PROTECTION.

P.S. 2288 Earl N. Thompson

EARL N. THOMPSON * LICENSED * No. 2288 STATE OF WEST VIRGINIA PROFESSIONAL SURVEYOR

(+) DENOTES LOCATION OF WELL ON UNITED STATES TOPOGRAPHIC MAPS.

DATE JUNE 24 , 20 15

REVISED 02/08/16 & 05/12/16

OPERATORS WELL NO. WV 515874

API WELL NO. 47 — 085 — 10282 H6A
STATE COUNTY PERMIT

MINIMUM DEGREE OF ACCURACY 1 / 2500 FILE NO. 8083P515874R2.dwg

SCALE SEE NOTE 2

HORIZONTAL & VERTICAL CONTROL DETERMINED BY DGPS (SURVEY GRADE TIE TO CORS NETWORK)

STATE OF WEST VIRGINIA
DIVISION OF ENVIRONMENTAL PROTECTION
OFFICE OF OIL AND GAS

WELL TYPE: OIL ___ GAS X LIQUID INJECTION ___ WASTE DISPOSAL ___ IF "GAS" PRODUCTION X STORAGE ___ DEEP ___ SHALLOW X

LOCATION :

PAD ELEVATION 1,016' WATERSHED NORTH FORK HUGHES RIVER

DISTRICT CLAY COUNTY RITCHIE QUADRANGLE PENNSBORO 7.5'

SURFACE OWNER JERRY MORTON ET AL ACREAGE 243.50±

ROYALTY OWNER ELLEN S. FRANCAVIGLIA ET AL ACREAGE 268±

PROPOSED WORK : LEASE NO. 105403

DRILL X CONVERT ___ DRILL DEEPER ___ REDRILL ___ FRACTURE OR STIMULATE X PLUG OFF OLD FORMATION ___ PERFORATE NEW FORMATION ___ PLUG AND ABANDON ___ CLEAN OUT AND REPLUG ___ OTHER ___

PHYSICAL CHANGE IN WELL (SPECIFY) ___ TARGET FORMATION MARCELLUS

ESTIMATED DEPTH 6,275'

COUNTY NAME

PERMIT

WELL OPERATOR EQT PRODUCTION COMPANY **DESIGNATED AGENT** REX C. RAY

ADDRESS 115 PROFESSIONAL PLACE P.O. BOX 280 BRIDGEPORT, WV 26330 **ADDRESS** 115 PROFESSIONAL PLACE P.O. BOX 280 BRIDGEPORT, WV 26330

SLS
12498

PEN54
WV 515874
EQT PRODUCTION COMPANY

4708510282

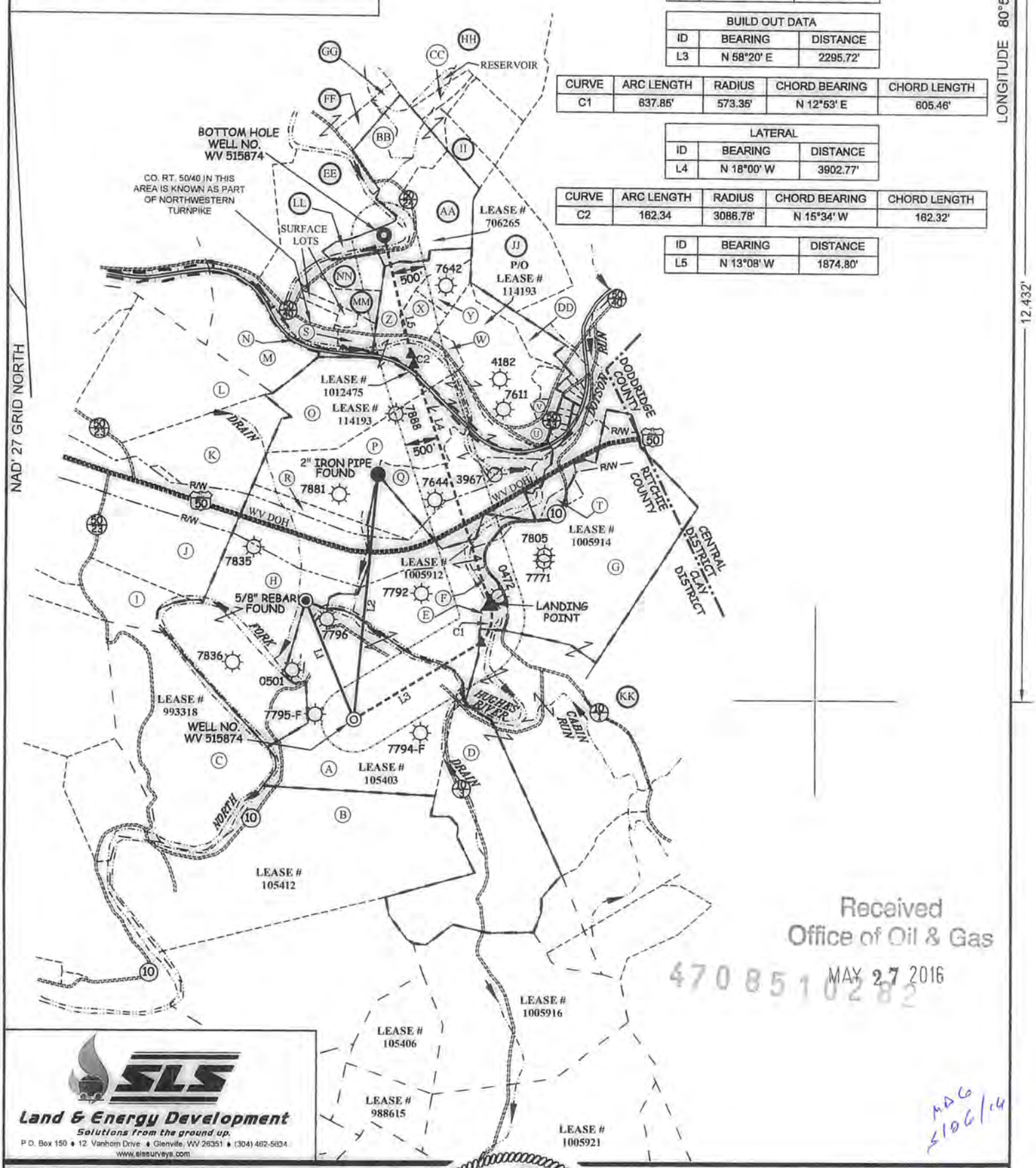

WELL TIES		
ID	BEARING	DISTANCE
L1	N 22°11' W	1989.19'
L2	N 05°10' E	3814.31'

BUILD OUT DATA		
ID	BEARING	DISTANCE
L3	N 58°20' E	2295.72'

CURVE	ARC LENGTH	RADIUS	CHORD BEARING	CHORD LENGTH
C1	637.85'	573.35'	N 12°53' E	605.46'

LATERAL		
ID	BEARING	DISTANCE
L4	N 18°00' W	3902.77'

CURVE	ARC LENGTH	RADIUS	CHORD BEARING	CHORD LENGTH
C2	162.34	3086.78'	N 15°34' W	162.32'

ID	BEARING	DISTANCE
L5	N 13°08' W	1874.80'

Received
Office of Oil & Gas
MAY 27 2016
4708510282

SLS
Land & Energy Development
Solutions from the ground up.
P.O. Box 150 ♦ 12 Vanhorn Drive ♦ Glenville, WV 26351 ♦ (304) 462-5634
www.slssurveys.com

MAG 5/06/16

(S.P.C. NORTH ZONE) (UTM(M) ZONE 17 NORTH)

NAD'27 S.P.C.(FT)	N. 279,120.12	E. 1,595,819.44
NAD'27 GEO.	LAT-(N) 39.257534	LONG-(W) 80.927403
NAD'83 UTM (M)	N. 4,345,367.53	E. 506,278.12
LANDING POINT		
NAD'27 S.P.C.(FT)	N. 280,915.75	E. 1,597,908.20
NAD'27 GEO.	LAT-(N) 39.262554	LONG-(W) 80.920127
NAD'83 UTM (M)	N. 4,345,925.21	E. 506,905.33
BOTTOM HOLE		
NAD'27 S.P.C.(FT)	N. 286,609.67	E. 1,596,232.79
NAD'27 GEO.	LAT-(N) 39.278112	LONG-(W) 80.926363
NAD'83 UTM (M)	N. 4,347,651.32	E. 506,365.96

EARL N. THOMPSON
LICENSED
No. 2288
STATE OF
WEST VIRGINIA
PROFESSIONAL SURVEYOR
5/12/16

(+) DENOTES LOCATION OF WELL ON UNITED STATES TOPOGRAPHIC MAPS.

LEGEND

LEASE LINE
SURFACE LINE
WELL LATERAL
OFFSET LINE
TIE LINE
CREEK
ROAD
RAIL ROAD
COUNTY ROUTE
STATE ROUTE
PROPOSED WELL
EXISTING WELL
PERMITTED WELL
CLAY DISTRICT TAX MAP–PARCEL C–00–00

COUNTY NAME
PERMIT

SCALE 1" = 2000'

DATE JUNE 24 , 20 15

REVISED MAY 12 , 20 16

OPERATORS WELL NO. WV 515874

API WELL NO. 47 — — —
STATE COUNTY PERMIT

STATE OF WEST VIRGINIA
DIVISION OF
ENVIRONMENTAL PROTECTION
OFFICE OF OIL AND GAS

WELL OPERATOR EQT PRODUCTION COMPANY
ADDRESS 115 PROFESSIONAL PLACE P.O. BOX 280
BRIDGEPORT, WV 26330

DESIGNATED AGENT REX C. RAY
ADDRESS 115 PROFESSIONAL PLACE P.O. BOX 280
BRIDGEPORT, WV 26330

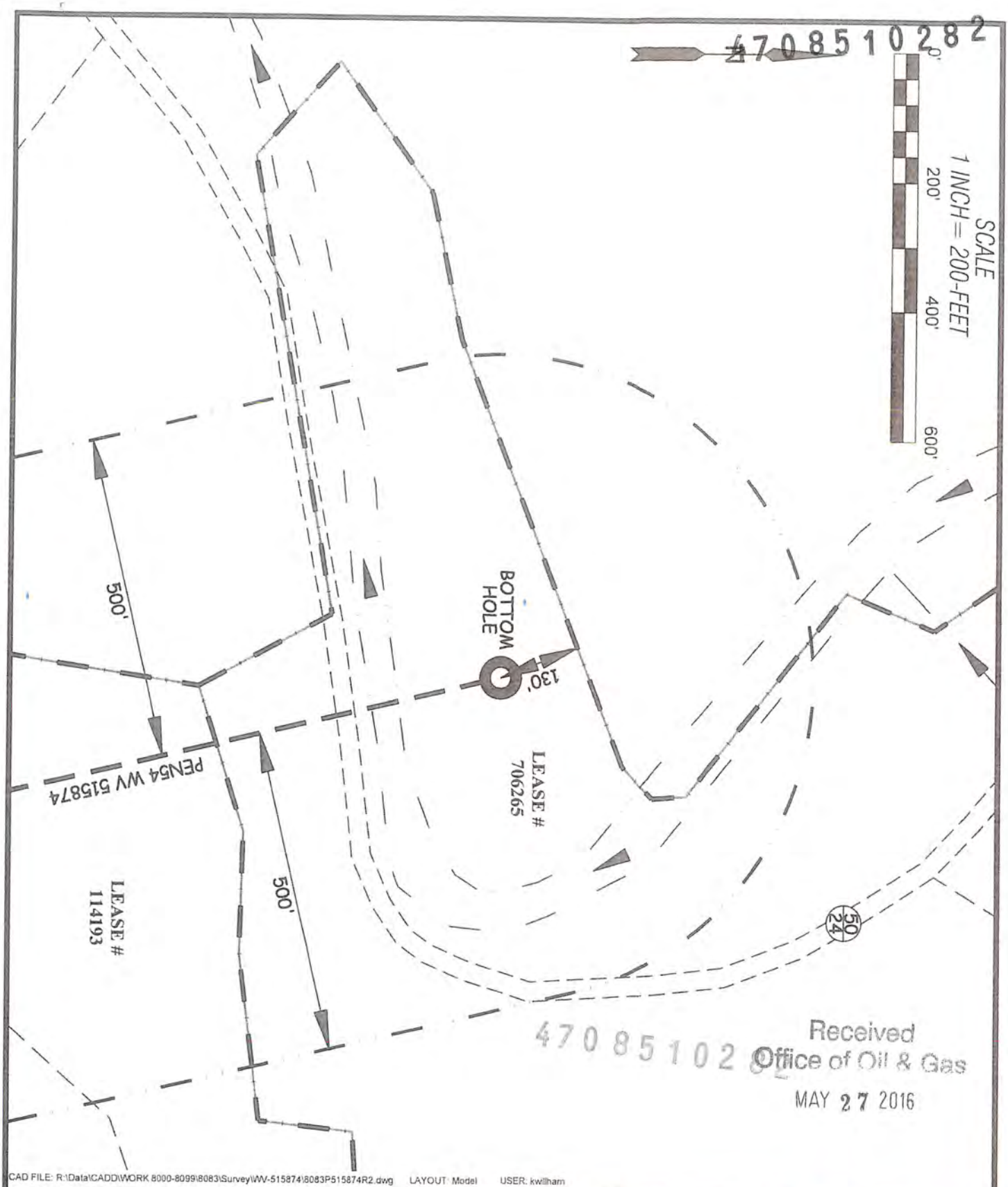

4708510282
Received
Office of Oil & Gas
MAY 27 2016

CAD FILE: R:\Data\CADD\WORK 8000-8099\8083\Survey\WV-515874\8083P515874R2.dwg LAYOUT: Model USER: kwilham

EXHIBIT MAP

SHOWING BLOWUP OF PEN54
H8 BOTTOM HOLE
IN RELATION TO LEASE LINES

JOB #: 8083
DRAWN BY: K.D.W.
DATE: 05-12-16
SCALE: 1" = 200'

SLS
Land & Energy Development
Solutions from the ground up.
P.O. Box 150 • 12 Vanhorn Drive • Glenville, WV 26351 • (304) 462-5634
www.slssurveys.com

EQT
Where energy meets innovation.

MPG
5/20/16

WW-6A1
(5/13)

Operator's Well No. 515874

INFORMATION SUPPLIED UNDER WEST VIRGINIA CODE
Chapter 22, Article 6A, Section 5(a)(5)
IN LIEU OF FILING LEASE(S) AND OTHER CONTINUING CONTRACT(S)

Under the oath required to make the verification on page 1 of this Notice and Application, I depose and say that I am the person who signed the Notice and Application for the Applicant, and that –

(1) the tract of land is the same tract described in this Application, partly or wholly depicted in the accompanying plat, and described in the Construction and Reclamation Plan;

(2) the parties and recordation data (if recorded) for lease(s) or other continuing contract(s) by which the Applicant claims the right to extract, produce or market the oil or gas are as follows:

Lease Name or Number	Grantor, Lessor, etc.	Grantee, Lessee, etc.	Royalty	Book/Page
See Attached				

Acknowledgement of Possible Permitting/Approval
In Addition to the Office of Oil and Gas

The permit applicant for the proposed well work addressed in this application hereby acknowledges the possibility of the need for permits and/or approvals from local, state, or federal entities in addition to the DEP, Office of Oil and Gas, including but not limited to the following:

- WV Division of Water and Waste Management
- WV Division of Natural Resources WV Division of Highways
- U.S. Army Corps of Engineers
- U.S. Fish and Wildlife Service
- County Floodplain Coordinator

4708510282

The applicant further acknowledges that any Office of Oil and Gas permit in no way overrides, replaces, or nullifies the need for other permits/approvals that may be necessary and further affirms that all needed permits/approvals should be acquired from the appropriate authority before the affected activity is initiated.

Well Operator: EQT Production Company
By:
Its: Permitting Supervisor

Received
Office of Oil & Gas
MAY 27 2016

WW-6A1 attachment Operator's Well No. 515874

4708510282

Lease No.	Grantor, Lessor, etc.	Grantee, Lessee, etc.	Royalty	Book/Page
105403	**Ellen S. Francaviglia, et al (current royalty owner)**		***	
	W.A. Flanagan, et al (original lessor)	The Philadelphia Company of West Virginia		LB63/295
	The Philadelphia Company of West Virginia	Pittsburgh and West Virginia Gas Company		DB55/362
	Pittsburgh and West Virginia Gas Company	Equitable Gas Company		DB 126/473
	Equitable Gas Company	Equitrans, Inc.		LB 201/253
	Equitrans,Inc.	Equitrans,LP.		AB269/182
	Equitrans,LP	Equitable Production/Eastern States, Inc.		DB234/830
	Equitable Production/Eastern States, Inc.	Equitable Production Company		CB557/56
	Equitable Production Company	EQT Production Company		DB 281/346 Doddridge
3-31-11	The Heartwood Forestland Fund IV, L.P.	EQT Production Company	n/a	342/294 Subsurface
	Marcellus Rights			
1005912	**Guy M. Flanagan, et al (current royalty owner)**		***	
	Gregory L. Flanagan (original lessor)	Energy Corporation of America		LB201/110
	Energy Corporation of America	Antero Resources Corportation		257/377
	Antero Resources Corportation	EQT Production Company		DB277/1037
114193	**Mary Lee Azelvandre, et al (current royalty owner)**		***	
	Harry L. Broadwater and Sadie E. Broadwater, etal	W.J. Rowland		LB33/533
	W.J. Rowland	The Philadelphia Company of West Virginia		DB126/418
	The Philadelphia Company of West Virginia	Pittsburgh and West Virginia Gas Company		LB55/362
	Pittsburgh and West Virginia Gas Company	Equitable Gas Company		DB126/473
	Equitable Gas Company	Equitrans, Inc.		LB201/253
	Equitrans,Inc.	Equitrans,LP.		AB269/182
	Equitrans,LP	Equitable Production/Eastern States, Inc.		DB234/830
	Equitable Production/Eastern States, Inc.	EQT Production Company		CB557/56
	Equitable Production/Eastern States, Inc.	EQT Production Company		DB281/346 Doddridge
1012475	**West Virginia State Rail Authority (current royalty owner)**		min pd 1/8th	
	West Virginia State Rail Authority (original lessor)	EQT Production Company		LB295/860
706265	**Carol A Marsh (current royalty owner)**		***	
	Sherman Marsh, et ux (original lessor)	Carnegie Natural Gas Company		LB32/55
	Carnegie Natural Gas Company	Carnegie Production Company		LB 228/859
	Carnegie Production Company	Equitable Production-Eastern States, Inc.		see attached
	Equitable Production-Eastern States, Inc.	Equitable Production Company		see attached
	Equitable Production Company	EQT Production Company		CB6/443

*** We will pay one-eighth of the total amount paid to or received by or allowed to the owner of the working interest at the wellhead for the oil or gas so extracted, produced, or marketed before deducting the amount to be paid to or set aside for the owner of the oil or gas in place, on all such oil or gas to be extracted, produced, or marketed from the well.

4708510282

Received
Office of Oil & Gas
MAY 27 2016

4708510282

EQT Production Company
2400 Zenith Ridge Rd.
Suite 200
Canonsburg, PA 15317
www.eqt.com

Todd Klaner
Manager, Permitting
tklaner@eqt.com

Via E-Mail

February 8, 2016

WV DEP Reviewer

RE: EQT Production Company
PAD ID – PEN54
Well# - 515874
Ritchie County

Dear Reviewer,

This well indicated by this permit application contains a Subsurface Easement Agreement for non-productive portions of the well bore. Attached is a Memorandum of Subsurface Use Agreement which gives EQT the right to drill below the surface of the tract 31/11 shown on the well plat.

EQT Production understands that the WVDEP will issue the permit in the normal process subject to the completeness of the requirements of the Office of Oil and Gas and does not take a position with regards to the property rights under this agreement.

EQT Production agrees that the WVDEP's issuance of the permit is in no way an affirmance or validation of EQT Production's claimed rights.

Regards,

Todd Klaner
Manager, Permitting
EQT Production Company

4708510282

4708510282

Cross Reference
DEED 283-542

SUBSURFACE RIGHT-OF-WAY AND EASEMENT AGREEMENT

This SUBSURFACE RIGHT-OF-WAY AND EASEMENT AGREEMENT ("Agreement") is made the 11 day of ~~November, 2015~~ January 2016, between **THE HEARTWOOD FORESTLAND FUND IV, L.P.** (hereinafter "Grantor" whether one or more), whose address is 1512 East Franklin Street, Suite 104, Chapel Hill, NC. 27514-2816 and **EQT PRODUCTION COMPANY**, (hereinafter "EQT"), whose corporate headquarters are located at 625 Liberty Avenue, Suite 1700, Pittsburgh, PA, 15222.

Property. Grantor owns that certain tract of land located in Clay District, Ritchie County, West Virginia containing 196.90 acres, more or less, and conveyed to Grantor in Deed Book 283, at page 542.

1. Subsurface. For purposes of this Agreement, the subsurface shall be limited to the subsurface region and underground lying below the deepest economically mineable and merchantable coal seam.

2. Grant. In consideration of Ten Dollars and other good and valuable consideration, the receipt and sufficiency of which is hereby acknowledged, Grantor grants to EQT a non-exclusive, perpetual right of way and subsurface easement within and underlying the Land for the purpose of locating and maintaining a total of two wellbores (PEN 54) for the production of hydrocarbons by EQT from EQT's adjacent mineral tracts and leases. This right of way and easement shall run with the land and shall remain in force and effect until released and relinquished by EQT back to the Grantor, in writing.

3. Wellbores. Upon completion of any wellbore within the subsurface underlying the Land (the "Subsurface Land"), the subsurface easement in the area of the wellbore and the one hundred (100') feet on each side of the wellbore that parallels it shall become an *exclusive* right of way and easement in that area. The wellbore locations are generally described in the plat(s) filed with the West Virginia Department of Environmental Protection (the "DEP") for well(s): If an as-built plat is not available from the DEP for a wellbore located within the Subsurface Land, any third-party with the right to operate within the Subsurface Land may contact EQT's land department for a copy of such as-built plat. After the date of this Agreement, EQT shall provide notice of additional wellbores located within the remaining Subsurface Land by filing an amendment, affidavit or other appropriate document.

4. No Surface Operations. This Agreement does not grant EQT the right to conduct any operations on the surface of the Land. No surface operations shall be conducted on the Land by EQT unless the parties enter into a separate agreement.

5. Miscellaneous Provisions

(a) This instrument may be executed in one or more counterparts, each of which will be deemed to be an original copy of this instrument and all of which will be deemed to comprise one single instrument.

(b) The parties agree that this Agreement shall be filed of record together with all exhibits thereto.

(c) For no additional consideration, Grantor shall execute such further documents as may be reasonably requested by EQT from time to time to effectuate the intent of this Agreement.

Received
Office of Oil & Gas
MAY 27 2016

IN WITNESS WHEREOF, effective as of the date first above written. This Agreement shall inure to the benefit of and be binding upon the parties hereto and their respective successors, assigns, heirs and administers and executors.

4708510282

Tracie D. Mc Donald
RITCHIE County 01:38:41 PM
Instrument No 201600001721
Date Recorded 02/03/2016
Document Type RDAE
Pages Recorded 4
Book-Page 342-294
Recording Fee $5.00
Additional $6.00

4708510282

DEED 283-542

WITNESS the following signatures:

HEARTWOOD FORESTLAND FUND IV, L.P.

By: Heartwood Forestland Advisors IV, LLC

Its: General Partners

By: The Forestland Group LLC

Its: Manager

By: Michael A. Hincher

Its: Vice President of Forestland Operations

EQT PRODUCTION COMPANY

By: John W. Damato

Its: Attorney in Fact

COMMONWEALTH OF VIRGINIA;
COUNTY OF WASHINGTON:

Before me, Tammy R. McKinnon, a Notary Public, on this day personally appeared Michael A. Hincher, known to me to be the Vice President of Forestland Operation of **The Forestland Group, LLC**, subscribed to the foregoing instrument, and acknowledged to me that he executed the instrument for the purposes and consideration therein expressed as his/her free act and deed. Given under my hand and seal of office this 11 day of ~~November, 2015~~ January, 2016.

My Commission expires: May 31, 2018.

[SEAL] TAMMY R. McKINNON
NOTARY PUBLIC
Commonwealth of Virginia
Reg. #168556

Tammy R. McKinnon
Notary Public

STATE OF WEST VIRGINIA;
COUNTY OF HARRISON:

Before me, Tina Maxwell, a Notary Public, on this day personally appeared John W. Damato, known to me to be the Attorney in Fact of **EQT PRODUCTION COMPANY**, subscribed to the foregoing instrument, and acknowledged to me that he executed the instrument for the purposes and consideration therein expressed as his/her free act and deed. Given under my hand and seal of office this 25th day of ~~November~~ January, 2016.

My Commission expires: August 29, 2019.

[SEAL] OFFICIAL SEAL
NOTARY PUBLIC
STATE OF WEST VIRGINIA
TINA MAXWELL
EQT PRODUCTION COMPANY
115 PROFESSIONAL PLACE
BRIDGEPORT WV 26330
My Commission Expires August 29, 2019

0282

Tina Maxwell
Notary Public

Prepared by: EQT Production Company, 625 Liberty Avenue, Suite 1700, Pittsburgh, PA 15222

Received
Office of Oil & Gas
MAY 27 2016

4708510282

PENNSYLVANIA DEPARTMENT OF STATE
CORPORATION BUREAU
ROOM 308 NORTH OFFICE BUILDING
P.O. BOX 8722
HARRISBURG, PA 17105-8722

156

CARNEGIE PRODUCTION COMPANY

THE CORPORATION BUREAU IS HAPPY TO SEND YOU YOUR FILED DOCUMENT. PLEASE NOTE THE FILE DATE AND THE SIGNATURE OF THE SECRETARY OF THE COMMONWEALTH. THE CORPORATION BUREAU IS HERE TO SERVE YOU AND WANTS TO THANK YOU FOR DOING BUSINESS IN PENNSYLVANIA. IF YOU HAVE ANY QUESTIONS PERTAINING TO THE CORPORATION BUREAU, CALL (717) 787-1057.

ENTITY NUMBER: 2645671

MICROFILM NUMBER: 2000096

0308-0311

4708510282

X
X

Received
Office of Oil & Gas
MAY 27 2016

200096 - 308

DEC 2 9 2000

Microfilm Number _____ Filed with the Department of State on _____

Entity Number 2719730

_____
Secretary of the Commonwealth

ARTICLES OF MERGER-DOMESTIC BUSINESS CORPORATION

DSCB:15-1926 (Rev 90)

In compliance with the requirements of 15 Pa.C.S. § 1926 (relating to articles of merger or consolidation), the undersigned business corporations, desiring to effect a merger, hereby state that:

1. The name of the corporation surviving the merger is: EQUITABLE PRODUCTION - EASTERN STATES, INC.

2. (Check and complete one of the following):

___ The surviving corporation is a domestic business corporation and the (a) address of its current registered office in this Commonwealth or (b) name of its commercial registered office provider and the county of venue is (the Department is hereby authorized to correct the following information to conform to the records of the Department):

(a) _____
Number and Street City State Zip County

(b) c/o: _____
Name of Commercial Registered Office Provider County

For a corporation represented by a commercial registered office provider, the county in (b) shall be deemed the county in which the corporation is located for venue and official publication purposes.

__X__ The surviving corporation is a qualified foreign business corporation incorporated under the laws of _____ and the (a) address of its current registered office in this Commonwealth or (b) name of its commercial registered office provider and the county of venue is (the Department is hereby authorized to correct the following information to conform to the records of the Department):

(a) _____
Number and Street City State Zip County

(b) c/o: CT Corporation System ALLEGHENY
Name of Commercial Registered Office Provider County

For a corporation represented by a commercial registered office provider, the county in (b) shall be deemed the county in which the corporation is located for venue and official publication purposes.

___ The surviving corporation is a nonqualified foreign business corporation incorporated under the laws of _____ and the address of its principal office under the laws of such domiciliary jurisdiction is:

_____
Number and Street City State Zip

3. The name and the address of the registered office in this Commonwealth or name of its commercial registered office provider and the county of venue of each other domestic business corporation and qualified foreign business corporation which is a party to the plan of merger are as follows:

Name of Corporation	Address of Registered Office or Name of Commercial Registered Office Provider	County
Carnegie Production Company	One Oxford Centre, Suite 3300, Pittsburgh, PA 15219-6401	Allegheny

4708510282

PA025 - 10/1999 CT System Online

Received
Office of Oil & Gas
MAY 27 2016

PA DEPT OF STATE

2000 DEC 29 PM 4:06 412 281 5212 P.16/22

DSCB:15-1926 (Rev 90)-2

4. **(Check, and if appropriate complete, one of the following):**

___The plan of merger shall be effective upon filing these Articles of Merger in the Department of State.

_X_The plan of merger shall be effective on: December 31, 2000 (Date) at 12:1[illegible] a.m. (Hour)

5. The manner in which the plan of merger was adopted by each domestic corporation is as follows:

Name of Corporation	**Manner of Adoption**
Carnegie Production Company	Adopted by action of the board of directors of the corporation
	pursuant to 15 PA. C. S. Section 1924(b)(2)

6. **(Strike out this paragraph if no foreign corporation is a party to the merger).** The plan was authorized, adopted or approved, as the case may be, by the foreign business corporation (or each of the foreign business corporations) party to the plan in accordance with the laws of the jurisdiction in which it is incorporated.

7. **(Check, and if appropriate complete, one of the following):**

_X_The plan of merger is set forth in full in Exhibit A attached hereto and made a part hereof.

___Pursuant to 15 Pa.C.S. § 1901 (relating to omission of certain provisions from filed plans) the provisions, if any, of the plan of merger that amend or constitute the operative Articles of Incorporation of the surviving corporation as in effect subsequent to the effective date of the plan are set forth in full in Exhibit A attached hereto and made a part hereof. The full text of the plan of merger is on file at the principal place of business of the surviving corporation, the address of which is:

Number and Street ____ City ____ State ____ Zip ____ County

IN TESTIMONY WHEREOF, the undersigned corporation or each undersigned corporation has caused these Articles of Merger to be signed by a duly authorized officer thereof this 29th day of December, 2000.

Equitable Production - Eastern States, Inc.
(Name of Corporation)

BY: [signature]
(Signature)

TITLE: VP and Corporate Secretary

Carnegie Production Company
(Name of Corporation)

BY: [signature] 4708510282
(Signature)

TITLE: VP

PA025 - 10/14/99 CT System Online

Received
Office of Oil & Gas
MAY 27 2016

State of Delaware

Office of the Secretary of State

I, HARRIET SMITH WINDSOR, SECRETARY OF STATE OF THE STATE OF DELAWARE, DO HEREBY CERTIFY THE ATTACHED IS A TRUE AND CORRECT COPY OF THE CERTIFICATE OF MERGER, WHICH MERGES:

"EQUITABLE PRODUCTION - EASTERN STATES, INC.", A DELAWARE CORPORATION,

WITH AND INTO "EQUITABLE PRODUCTION COMPANY" UNDER THE NAME OF "EQUITABLE PRODUCTION COMPANY", A CORPORATION ORGANIZED AND EXISTING UNDER THE LAWS OF THE STATE OF PENNSYLVANIA, AS RECEIVED AND FILED IN THIS OFFICE THE THIRTIETH DAY OF APRIL, A.D. 2001, AT 12 O'CLOCK P.M.

A FILED COPY OF THIS CERTIFICATE HAS BEEN FORWARDED TO THE NEW CASTLE COUNTY RECORDER OF DEEDS.

4708510282

Harriet Smith Windsor

Harriet Smith Windsor, Secretary of State

3386289 8100M

010206565

AUTHENTICATION: 1109924

DATE: 05-01-01

CERTIFICATE OF MERGER
OF
EQUITABLE PRODUCTION – EASTERN STATES, INC.
INTO
EQUITABLE PRODUCTION COMPANY

The undersigned corporation DOES HEREBY CERTIFY:

FIRST: That the names and states of incorporation of each of the constituent corporations of the merger are as follows:

NAME	STATE OF INCORPORATION
Equitable Production – Eastern States, Inc.	Delaware
Equitable Production Company	Pennsylvania

SECOND: That an Agreement of Merger between the parties to the merger has been approved, adopted, certified, executed and acknowledged by each of the constituent corporations in accordance with the requirements of Section 252 of the General Corporation Law of Delaware.

THIRD: That the Articles of Incorporation of Equitable Production Company, a Pennsylvania corporation, which is the surviving corporation, shall continue in full force and effect as the Certificate of Incorporation of the surviving corporation.

FOURTH: That the executed Agreement of Merger is on file at an office of the surviving corporation, the address of which is 301 Grant Street, Suite 3300, Oxford Centre, Pittsburgh, Pennsylvania 15219.

FIFTH: That a copy of the Agreement of Merger will be furnished, on request and without cost, to any stockholder of any constituent corporation.

SIXTH: That Equitable Production Company survives the merger and may be served with process in the State of Delaware in any proceeding for enforcement of any obligation of any constituent Delaware corporation as well as for enforcement of any obligation of the surviving corporation arising from the merger, including any suit or other proceeding to enforce the right of any stockholder, as determined in appraisal proceedings pursuant to the provisions of Section 262 of the General Corporation Law of Delaware, and it does hereby irrevocably appoint the Secretary of State of Delaware as its agent to accept service of process in any such suit or other proceeding. The address to which a copy of such process shall be mailed by the Secretary of State of Delaware is 301 Grant Street, Suite 3300, Oxford Centre, Pittsburgh, PA 15219 until the surviving corporation shall have hereafter designated in writing to the said Secretary of State a different address for such purpose.

SEVENTH: That this Certificate of Merger shall be effective on April 30, 2001.

Dated: April 26, 2001

4708510282

EQUITABLE PRODUCTION COMPANY

By: _____
Henry E. Reich, Jr., Vice President

STATE OF DELAWARE
SECRETARY OF STATE
DIVISION OF CORPORATIONS
FILED 12:00 PM 04/30/2001
010206565 – 2075827

APR-30-2001 11:34 CT CORPORATION SYSTEM 412 281 5212 P.02/02

4708510282

May16, 2016

Mr. James Martin
West Virginia Department of Environmental Protection
Office of Oil and Gas
601 57th Street SE
Charleston, WV 25304

Re: PEN54 well pad, well number 515874
Clay District, Ritchie County

Dear Mr. Martin,

EQT Production Company is submitting an application for a new well work permit for the above well number. Upon information and belief, Operator's lease and/ or other real property rights permit it to conduct drilling operations for the subject well in the location shown on the plat, including under any public roads that the well lateral crosses.

Sincerely,

Vicki Roark
Permitting Supervisor-WV

4708510282
Received
Office of Oil & Gas
MAY 27 2016

WW-6AC
(1/12)

STATE OF WEST VIRGINIA
DEPARTMENT OF ENVIRONMENTAL PROTECTION, OFFICE OF OIL AND GAS
NOTICE CERTIFICATION

Date of Notice Certification: _____

API No. 47- 85 -_____
Operator's Well No. 515874
Well Pad Name: PEN54

Notice has been given:
Pursuant to the provisions in West Virginia Code § 22-6A, the Operator has provided the required parties with the Notice Forms listed below for the tract of land as follows:

State:	WV	UTM NAD 83	Easting:	506,278.12
County:	Ritchie		Northing:	4,345,367.53
District:	Clay	Public Road Access:		RT50
Quadrangle:	Pennsboro	Generally used farm name:		Jerry Morton et al
Watershed:	North Fork Hughes River			

Pursuant to West Virginia Code § 22-6A-7(b), every permit application filed under this section shall be on a form as may be prescribed by the secretary, shall be verified and shall contain the following information: (14) A certification from the operator that (i) it has provided the owners of the surface described in subdivisions (1), (2) and (4), subsection (b), section ten of this article, the information required by subsections (b) and (c), section sixteen of this article; (ii) that the requirement was deemed satisfied as a result of giving the surface owner notice of entry to survey pursuant to subsection (a), section ten of this article six-a; or (iii) the notice requirements of subsection (b), section sixteen of this article were waived in writing by the surface owner; and Pursuant to West Virginia Code § 22-6A-11(b), the applicant shall tender proof of and certify to the secretary that the notice requirements of section ten of this article have been completed by the applicant.

Pursuant to West Virginia Code § 22-6A, the Operator has attached proof to this Notice Certification that the Operator has properly served the required parties with the following: *PLEASE CHECK ALL THAT APPLY	OOG OFFICE USE ONLY
☐ 1. NOTICE OF SEISMIC ACTIVITY or ☑ NOTICE NOT REQUIRED BECAUSE NO SEISMIC ACTIVITY WAS CONDUCTED	☐ RECEIVED/ NOT REQUIRED
☐ 2. NOTICE OF ENTRY FOR PLAT SURVEY or ☑ NO PLAT SURVEY WAS CONDUCTED	☐ RECEIVED
☑ 3. NOTICE OF INTENT TO DRILL or ☐ NOTICE NOT REQUIRED BECAUSE NOTICE OF ENTRY FOR PLAT SURVEY WAS CONDUCTED or 4708510282 ☐ WRITTEN WAIVER BY SURFACE OWNER (PLEASE ATTACH)	☐ RECEIVED/ NOT REQUIRED
☑ 4. NOTICE OF PLANNED OPERATION	☐ RECEIVED
☑ 5. PUBLIC NOTICE	☐ RECEIVED
☑ 6. NOTICE OF APPLICATION	☐ RECEIVED

Required Attachments:
The Operator shall attach to this Notice Certification Form all Notice Forms and Certifications of Notice that have been provided to the required parties and/or any associated written waivers. For the Public Notice, the operator shall attach a copy of the Class II Legal Advertisement with publication date verification or the associated Affidavit of Publication. The attached Notice Forms and Certifications of Notice shall serve as proof that the required parties have been noticed as required under West Virginia Code § 22-6A. Pursuant to West Virginia Code § 22-6A-11(b), the Certification of Notice to the person may be made by affidavit of personal service, the return receipt card or other postal receipt for certified mailing.

WW-6AC
(1/12)

Certification of Notice is hereby given:

THEREFORE, I Victoria J. Roark, have read and understand the notice requirements within West Virginia Code § 22-6A. I certify that as required under West Virginia Code § 22-6A, I have served the attached copies of the Notice Forms, identified above, to the required parties through personal service, by registered mail or by any method of delivery that requires a receipt or signature confirmation. I certify under penalty of law that I have personally examined and am familiar with the information submitted in this Notice Certification and all attachments, and that based on my inquiry of those individuals immediately responsible for obtaining the information, I believe that the information is true, accurate and complete. I am aware that there are significant penalties for submitting false information, including the possibility of fine and imprisonment.

Well Operator:	EQT Production Company	Address:	115 Professional Place PO Box 280
By:	Victoria J. Roark		Bridgeport WV 26330
Its:	Permitting Supervisor	Facsimile:	304-848-0041
Telephone:	304-848-0076	Email:	vroark@eqt.com

NOTARY SEAL
OFFICIAL SEAL
NOTARY PUBLIC
STATE OF WEST VIRGINIA
REBECCA L. WANSTREET
EQT PRODUCTION COMPANY
PO BOX 280
BRIDGEPORT, WV 26330
My commission expires April 07, 2020

Subscribed and sworn before me this 3 day of March 2016.

Rebecca L. Wanstreet Notary Public

My Commission Expires 4-7-20

Oil and Gas Privacy Notice:

The Office of Oil and Gas processes your personal information, such as name, address and telephone number, as part of our regulatory duties. Your personal information may be disclosed to other State agencies or third parties in the normal course of business or as needed to comply with statutory or regulatory requirements, including Freedom of Information Act requests. Our office will appropriately secure your personal information. If you have any questions about our use or your personal information, please contact DEP's Chief Privacy Officer at depprivacyofficer@wv.gov.

4708510282

RECEIVED
Office of Oil and Gas
MAR 04 2016
WV Department of
Environmental Protection

WW-6A
(9-13)

API NO. 47- 85 -
OPERATOR WELL NO. 515874
Well Pad Name: PEN54

STATE OF WEST VIRGINIA
DEPARTMENT OF ENVIRONMENTAL PROTECTION, OFFICE OF OIL AND GAS
NOTICE OF APPLICATION

Notice Time Requirement: notice shall be provided no later than the **filing date of permit application.**

Date of Notice: 3/3/16 **Date Permit Application Filed:** 3/3/16

Notice of:

☑ PERMIT FOR ANY WELL WORK

☐ CERTIFICATE OF APPROVAL FOR THE CONSTRUCTION OF AN IMPOUNDMENT OR PIT

4708510282

Delivery method pursuant to West Virginia Code § 22-6A-10(b)

☐ PERSONAL SERVICE

☐ REGISTERED MAIL

☑ METHOD OF DELIVERY THAT REQUIRES A RECEIPT OR SIGNATURE CONFIRMATION

Pursuant to W. Va. Code § 22-6A-10(b) no later than the filing date of the application, the applicant for a permit for any well work or for a certificate of approval for the construction of an impoundment or pit as required by this article shall deliver, by personal service or by registered mail or by any method of delivery that requires a receipt or signature confirmation, copies of the application, the erosion and sediment control plan required by section seven of this article, and the well plat to each of the following persons: (1) The owners of record of the surface of the tract on which the well is or is proposed to be located; (2) The owners of record of the surface tract or tracts overlying the oil and gas leasehold being developed by the proposed well work, if the surface tract is to be used for roads or other land disturbance as described in the erosion and sediment control plan submitted pursuant to subsection (c), section seven of this article; (3) The coal owner, operator or lessee, in the event the tract of land on which the well proposed to be drilled is located [sic] is known to be underlain by one or more coal seams; (4) The owners of record of the surface tract or tracts overlying the oil and gas leasehold being developed by the proposed well work, if the surface tract is to be used for the placement, construction, enlargement, alteration, repair, removal or abandonment of any impoundment or pit as described in section nine of this article; (5) Any surface owner or water purveyor who is known to the applicant to have a water well, spring or water supply source located within one thousand five hundred feet of the center of the well pad which is used to provide water for consumption by humans or domestic animals; and (6) The operator of any natural gas storage field within which the proposed well work activity is to take place. (c)(1) If more than three tenants in common or other co-owners of interests described in subsection (b) of this section hold interests in the lands, the applicant may serve the documents required upon the person described in the records of the sheriff required to be maintained pursuant to section eight, article one, chapter eleven-a of this code. (2) Notwithstanding any provision of this article to the contrary, notice to a lien holder is not notice to a landowner, unless the lien holder is the landowner. W. Va. Code R. § 35-8-5.7.a requires, in part, that the operator shall also provide the Well Site Safety Plan ("WSSP") to the surface owner and any water purveyor or surface owner subject to notice and water testing as provided in section 15 of this rule.

☐ Application Notice ☐ WSSP Notice ☐ E&S Plan Notice ☐ Well Plat Notice is hereby provided to:

☑ SURFACE OWNER(s)
Name: See Attached
Address: _____
_____
Name: _____
Address: _____
_____

☑ SURFACE OWNER(s) (Road and/or Other Disturbance)
Name: See Attached
Address: _____
_____
Name: _____
Address: _____
_____

☑ SURFACE OWNER(s) (Impoundments or Pits)
Name: See Attached
Address: _____
_____

☑ COAL OWNER OR LESSEE
Name: See Attached
Address: _____
_____

☐ COAL OPERATOR
Name: _____
Address: _____
_____

☐ SURFACE OWNER OF WATER WELL AND/OR WATER PURVEYOR(s)
Name: _____
Address: _____
_____

☐ OPERATOR OF ANY NATURAL GAS STORAGE FIELD
Name: _____
Address: _____
_____

*Please attach additional forms if necessary

RECEIVED
Office of Oil and Gas
MAR 04 2016
WV Department of
Environmental Protection

WW-6A
(8-13)

API NO. 47- 85 -
OPERATOR WELL NO. 515874
Well Pad Name: PEN54

Notice is hereby given:
Pursuant to West Virginia Code § 22-6A-10(b), notice is hereby given that the undersigned well operator has applied for a permit for well work or for a certificate of approval for the construction of an impoundment or pit.

This Notice Shall Include:
Pursuant to W. Va. Code § 22-6A-10(b), this notice shall include: (1) copies of the application; (2) the erosion and sediment control plan required by section seven of this article; and (3) the well plat.

Pursuant to W. Va. Code § 22-6A-10(f), this notice shall include: (1) a statement of the time limits for filing written comments; (2) who may file written comments; (3) the name and address of the secretary for the purpose of filing the comments and obtaining additional information; and (4) a statement that the persons may request, at the time of submitting written comments, notice of the permit decision and a list of persons qualified to test water.

Pursuant to W. Va. Code R. § 35-8-5.7.a, the operator shall provide the Well Site Safety Plan to the surface owner and any water purveyor or surface owner subject to notice and water testing as provided in section 15 of this rule.

Pursuant to W. Va. Code R. § 35-8-15.2.c, this notice shall: (1) contain a statement of the surface owner's and water purveyor's right to request sampling and analysis; (2) advise the surface owner and water purveyor of the rebuttable presumption for contamination or deprivation of a fresh water source or supply; advise the surface owner and water purveyor that refusal to allow the operator to conduct a pre-drilling water well test constitutes a method to rebut the presumption of liability; (3) advise the surface owner and water purveyor of his or her independent right to sample and analyze any water supply at his or her own expense; advise the surface owner and water purveyor whether or not the operator will utilize an independent laboratory to analyze any sample; and (4) advise the surface owner and or water purveyor that he or she can obtain from the Chief a list of water testing laboratories in the subject area capable of and qualified to test water supplies in accordance with standard acceptable methods.

Additional information related to horizontal drilling may be obtained from the Secretary, at the WV Department of Environmental Protection headquarters, located at 601 57th Street, SE, Charleston, WV 25304 (304-926-0450) or by visiting www.dep.wv.gov/oil-and-gas/pages/default.aspx.

4708501282

Well Location Restrictions
Pursuant to W. Va. Code § 22-6A-12, Wells may not be drilled within two hundred fifty feet measured horizontally from any existing water well or developed spring used for human or domestic animal consumption. The center of well pads may not be located within six hundred twenty-five feet of an occupied dwelling structure, or a building two thousand five hundred square feet or larger used to house or shelter dairy cattle or poultry husbandry. This limitation is applicable to those wells, developed springs, dwellings or agricultural buildings that existed on the date a notice to the surface owner of planned entry for surveying or staking as provided in section ten of this article or a notice of intent to drill a horizontal well as provided in subsection (b), section sixteen of this article was provided, whichever occurs first, and to any dwelling under construction prior to that date. This limitation may be waived by written consent of the surface owner transmitted to the department and recorded in the real property records maintained by the clerk of the county commission for the county in which such property is located. Furthermore, the well operator may be granted a variance by the secretary from these distance restrictions upon submission of a plan which identifies the sufficient measures, facilities or practices to be employed during well site construction, drilling and operations. The variance, if granted, shall include terms and conditions the department requires to ensure the safety and protection of affected persons and property. The terms and conditions may include insurance, bonding and indemnification, as well as technical requirements. (b) No well pad may be prepared or well drilled within one hundred feet measured horizontally from any perennial stream, natural or artificial lake, pond or reservoir, or a wetland, or within three hundred feet of a naturally reproducing trout stream. No well pad may be located within one thousand feet of a surface or ground water intake of a public water supply. The distance from the public water supply as identified by the department shall be measured as follows: (1) For a surface water intake on a lake or reservoir, the distance shall be measured from the boundary of the lake or reservoir. (2) For a surface water intake on a flowing stream, the distance shall be measured from a semicircular radius extending upstream of the surface water intake. (3) For a groundwater source, the distance shall be measured from the wellhead or spring. The department may, in its discretion, waive these distance restrictions upon submission of a plan identifying sufficient measures, facilities or practices to be employed during well site construction, drilling and operations to protect the waters of the state. A waiver, if granted, shall impose any permit conditions as the secretary considers necessary. (c) Notwithstanding the foregoing provisions of this section, nothing contained in this section prevents an operator from conducting the activities permitted or authorized by a Clean Water Act Section 404 permit or other approval from the United States Army Corps of Engineers within any waters of the state or within the restricted areas referenced in this section. (d) The well location restrictions set forth in this section shall not apply to any well on a multiple well pad if at least one of the wells was permitted prior to the effective date of this article. (e) The secretary shall, by December 31, 2012, report to the Legislature on the noise, light, dust and volatile organic compounds generated by the drilling of horizontal wells as they relate to the well location restrictions regarding occupied dwelling structures pursuant to this section. Upon a finding, if any, by the secretary that the well location restrictions regarding occupied dwelling structures are inadequate or otherwise require alteration to address the items

RECEIVED
Office of Oil and Gas
MAR 04 2015
WV Department of
Environmental Protection

examined in the study required by this subsection, the secretary shall have the authority to propose for promulgation legislative rules establishing guidelines and procedures regarding reasonable levels of noise, light, dust and volatile organic compounds relating to drilling horizontal wells, including reasonable means of mitigating such factors, if necessary.

Water Well Testing:
Pursuant to West Virginia Code § 22-6A-10(d), notification shall be made, with respect to surface landowners identified in subsection (b) or water purveyors identified in subdivision (5), subsection (b) of this section, of the opportunity for testing their water well. The operator shall provide an analysis to such surface landowner or water purveyor at their request.

Water Testing Laboratories:
Pursuant to West Virginia Code § 22-6A-10(i), persons entitled to notice pursuant to subsection (b) of this section may contact the department to ascertain the names and locations of water testing laboratories in the subject area capable and qualified to test water supplies in accordance with standard accepted methods. In compiling that list of names the department shall consult with the state Bureau for Public Health and local health departments. A surface owner and water purveyor has an independent right to sample and analyze any water supply at his or her own expense. The laboratory utilized by the operator shall be approved by the agency as being certified and capable of performing sample analyses in accordance with this section.

Rebuttable Presumption for Contamination or Deprivation of a Fresh Water Source or Supply:

W. Va. Code § 22-6A-18 requires that (b) unless rebutted by one of the defenses established in subsection (c) of this section, in any action for contamination or deprivation of a fresh water source or supply within one thousand five hundred feet of the center of the well pad for horizontal well, there is a rebuttable presumption that the drilling and the oil or gas well or either was the proximate cause of the contamination or deprivation of the fresh water source or supply. (c) In order to rebut the presumption of liability established in subsection (b) of this section, the operator must prove by a preponderance of the evidence one of the following defenses: (1) The pollution existed prior to the drilling or alteration activity as determined by a predrilling or prealteration water well test. (2) The landowner or water purveyor refused to allow the operator access to the property to conduct a predrilling or prealteration water well test. (3) The water supply is not within one thousand five hundred feet of the well. (4) The pollution occurred more than six months after completion of drilling or alteration activities. (5) The pollution occurred as the result of some cause other than the drilling or alteration activity. (d) Any operator electing to preserve its defenses under subdivision (4), subsection (c) of this section shall retain the services of an independent certified laboratory to conduct the predrilling or prealteration water well test. A copy of the results of the test shall be submitted to the department and the surface owner or water purveyor in a manner prescribed by the secretary. (e) Any operator shall replace the water supply of an owner of interest in real property who obtains all or part of that owner's supply of water for domestic, agricultural, industrial or other legitimate use from an underground or surface source with a comparable water supply where the secretary determines that the water supply has been affected by contamination, diminution or interruption proximately caused by the oil or gas operation, unless waived in writing by that owner. (f) The secretary may order the operator conducting the oil or gas operation to: (1) Provide an emergency drinking water supply within twenty-four hours; (2) Provide temporary water supply within seventy-two hours; (3) Within thirty days begin activities to establish a permanent water supply or submit a proposal to the secretary outlining the measures and timetables to be used in establishing a permanent supply. The total time in providing a permanent water supply may not exceed two years. If the operator demonstrates that providing a permanent replacement water supply cannot be completed within two years, the secretary may extend the time frame on case-by-case basis; and (4) Pay all reasonable costs incurred by the real property owner in securing a water supply. (g) A person as described in subsection (b) of this section aggrieved under the provisions of subsections (b), (e) or (f) of this section may seek relief in court... (i) Notwithstanding the denial of the operator of responsibility for the damage to the real property owner's water supply or the status of any appeal on determination of liability for the damage to the real property owner's water supply, the operator may not discontinue providing the required water service until authorized to do so by the secretary or a court of competent jurisdiction.

Written Comment:
Pursuant to West Virginia Code § 22-6A-11(a), all persons described in subsection (b), section ten of this article may file written comments with the secretary as to the location or construction of the applicant's proposed well work within thirty days after the application is filed with the secretary. All persons described in West Virginia Code § 22-6A-10(b) may file written comments as to the location or construction of the applicant's proposed well work to the Secretary at:

Chief, Office of Oil and Gas
Department of Environmental Protection
601 57th St. SE
Charleston, WV 25304
(304) 926-0450

Such persons may request, at the time of submitting written comments, notice of the permit decision and a list of persons qualified to test water. **NOTE: YOU ARE NOT REQUIRED TO FILE ANY COMMENT.**

RECEIVED
Office of Oil and Gas
MAR 04 2016
WV Department of
Environmental Protection

WW-6A
(8-13)

API NO. 47- 85 -
OPERATOR WELL NO. 515874
Well Pad Name: PEN54

Time Limits and Methods for Filing Comments.

The law requires these materials to be served on or before the date the operator files its Application. You have **THIRTY (30) DAYS** after the filing date to file your comments. Comments must be filed in person or received in the mail by the Chief's office by the time stated above. You may call the Chief's office to be sure of the date. Check with your postmaster to ensure adequate delivery time or to arrange special expedited handling. If you have been contacted by the well operator and you have signed a "voluntary statement of no objection" to the planned work described in these materials, then the permit may be issued at any time.

Pursuant to West Virginia Code § 22-6A-11(c)(2), Any objections of the affected coal operators and coal seam owners and lessees shall be addressed through the processes and procedures that exist under sections fifteen, seventeen and forty, article six of this chapter, as applicable and as incorporated into this article by section five of this article. The written comments filed by the parties entitled to notice under subdivisions (1), (2), (4), (5) and (6), subsection (b), section ten of this article shall be considered by the secretary in the permit issuance process, but the parties are not entitled to participate in the processes and proceedings that exist under sections fifteen, seventeen or forty, article six of this chapter, as applicable and as incorporated into this article by section five of this article.

Comment Requirements

Your comments must be in writing and include your name, address and telephone number, the well operator's name and well number and the approximate location of the proposed well site including district and county from the application. You may add other documents, such as sketches, maps or photographs to support your comments.

Disclaimer: All comments received will be placed on our web site http://www.dep.wv.gov/oil-and-gas/Horizontal-Permits/Pages/default.aspx and the applicant will automatically be forwarded an email notice that such comments have been submitted. The applicant will be expected to provide a response to comments submitted by any surface owner, water purveyor or natural gas storage operator noticed within the application.

Permit Denial or Condition

The Chief has the power to deny or condition a well work permit. Pursuant to West Virginia Code § 22-6A-8(d), the permit may not be issued or be conditioned, including conditions with respect to the location of the well and access roads prior to issuance if the director determines that:

(1) The proposed well work will constitute a hazard to the safety of persons;
(2) The plan for soil erosion and sediment control is not adequate or effective;
(3) Damage would occur to publicly owned lands or resources; or
(4) The proposed well work fails to protect fresh water sources or supplies.

4708510282

A permit may also be denied under West Virginia Code § 22-6A-7(k), the secretary shall deny the issuance of a permit if the secretary determines that the applicant has committed a substantial violation of a previously issued permit for a horizontal well, including the applicable erosion and sediment control plan associated with the previously issued permit, or a substantial violation of one or more of the rules promulgated under this article, and in each instance has failed to abate or seek review of the violation within the time prescribed by the secretary pursuant to the provisions of subdivisions (1) and (2), subsection (a), section five of this article and the rules promulgated hereunder, which time may not be unreasonable.

Pursuant to West Virginia Code § 22-6A-10(g), any person entitled to submit written comments to the secretary pursuant to subsection (a), section eleven of this article, shall also be entitled to receive from the secretary a copy of the permit as issued or a copy of the order modifying or denying the permit if the person requests receipt of them as a part of the written comments submitted concerning the permit application. Such persons may request, at the time of submitting written comments, notice of the permit decision and a list of persons qualified to test water.

RECEIVED
Office of Oil and Gas
MAR 04 2016
WV Department of
Environmental Protection

WW-6A
(8-13)

API NO. 47- 85 -
OPERATOR WELL NO. 515874
Well Pad Name: PEN54

Notice is hereby given by:

Well Operator: EQT Production Company
Telephone: 304-848-0076
Email: vroark@eqt.com

Address: 115 Professional Place PO Box 280
Bridgeport WV 26330
Facsimile: 304-848-0041

Oil and Gas Privacy Notice:

The Office of Oil and Gas processes your personal information, such as name, address and telephone number, as part of our regulatory duties. Your personal information may be disclosed to other State agencies or third parties in the normal course of business or as needed to comply with statutory or regulatory requirements, including Freedom of Information Act requests. Our office will appropriately secure your personal information. If you have any questions about our use or your personal information, please contact DEP's Chief Privacy Officer at depprivacyofficer@wv.gov.

OFFICIAL SEAL
NOTARY PUBLIC
STATE OF WEST VIRGINIA
REBECCA L. WANSTREET
EQT PRODUCTION COMPANY
PO BOX 280
BRIDGEPORT, WV 26330
My commission expires April 07, 2020

Subscribed and sworn before me this 3 day of March 2016.

Rebecca L Wanstreet Notary Public

My Commission Expires 4-7-20

4708510[illegible]

RECEIVED
Office of Oil and Gas
MAR 04 2016
WV Department of
Environmental Protection

WATER SOURCE LOCATIONS FOR FLANAGAN LEASE PEN54 WELLS

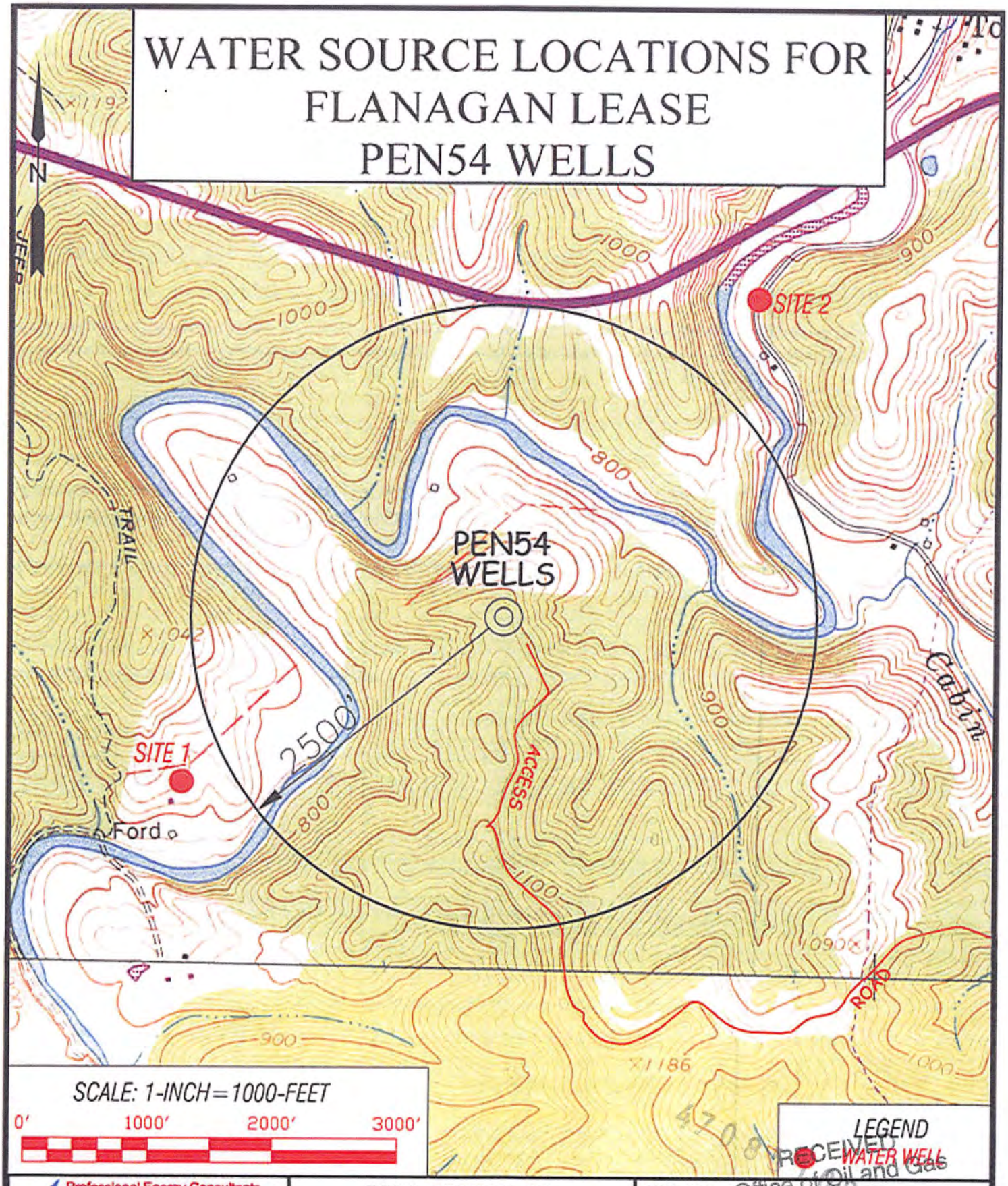

Professional Energy Consultants
A DIVISION OF SMITH LAND SURVEYING, INC.
SLS
SURVEYORS ENGINEERS ENVIRONMENTAL PROJECT MGMT.

DRAWN BY	FILE NO.	DATE	CADD FILE:
K.D.W.	8083	06/02/15	8083WSPEN54.dwg

TOPO SECTION OF:
PENNSBORO, WV 7.5' QUAD

DISTRICT	COUNTY	TAX MAP-PARCEL NO.
CLAY	RITCHIE	31-09

OPERATOR:
EQT PRODUCTION COMPANY
115 PROFESIONAL PLACE
P.O. BOX 280
BRIDGEPORT, WV 26330

RECEIVED
Office of Oil and Gas
JUN 04 2015
WV Department of
Environmental Protection

Surface Owners:

Jerry Morton
406 Cabin Run
Pennsboro, WV 26415

Randy Collins, Natalie Collins, Kate Collins
5368 Muscovy RD
Middleburg, FL 32068

Corrected 03/07/16

4708510282

RECEIVED
Office of Oil and Gas
MAR 04 2016
WV Department of
Environmental Protection

Surface Owners: Access Road & Other Disturbance

Jerry Morton
406 Cabin Run
Pennsboro, WV 26415

Randy Collins, Natalie Collins, Kate Collins
5368 Muscovy RD
Middleburg, FL 32068

Heartwood Forestland Fund IV, L.P.
1512 East Franklin Street, Suite 104,
Chapel Hill NC. 27514-2816

Coastal Forest Resources
dba Coastal Timberlands Company
PO Box 709
Buckhannon, WV 26201

4708510282

RECEIVED
Office of Oil and Gas
MAR 04 2016
WV Department of
Environmental Protection

Surface Owners: Pits or Impoundments

Jerry Morton
406 Cabin Run
Pennsboro, WV 26415

Randy Collins, Natalie Collins, Kate Collins
5368 Muscovy RD
Middleburg, FL 32068

4708510282

RECEIVED
Office of Oil and Gas
MAR 04 2016
WV Department of
Environmental Protection

Coal Owner(s)

Phyllis A Rymer
21166 State Rt 676
Marietta OH 45750

Mollie Harrington, Charles W. Morrison,
Claire Leugers
Trustees of Joan N Morrison Residuary Trust
102 NE Cypress Trail
Jensen Beach FL 34957

Braden M Nida
150 Seneca Dr.
Marietta OH 45750

Carolyn W Wilson
3731 Buffalo Lane
Montrose CO 81401

Anita W Gass
14190 Green St
Grand Haven MI 49417

Marsha Spenst
1111 Maxwell Ave
Boulder CO 80304

Byron Whealen
678 N 38th Ave
Deerfield Beach FL 33442

Rebecca Pearson
1812 W Mountain
Ft Collins CO 80521

Robert Singleton
1561 Connell Rd
Charleston WV 25314

Monica Singleton
2504 22nd Ave
Parkersburg WV 26101

Deborah K Latham
Trustee of the Deborah K Latham Living Trust
1810 10th Pike
Vero Beach FL 32960

Dewey W Jones
PO Box 172
Griffithsville WV 25521

Patricia A Zinn
315 South 4th St
Douglas WY 82633

James P Rogers Jr
400 E. Pinal Street
Catalina AZ 87539

Virginia R Terry
8868 State RT. 555
Cutler OH 45724

Samuel C Rogers
204 Eleanor St
Pennsboro WV 26415

Joyce L Wilson
FKA Joyce L Fowler
150 County Rd 4603
Bogata TX 75417

James R. Coffield
1842 Tonawanda Ave
Akron OH 44305

Linda J Chambers
47 Weber St
Richwood WV 26261

Stephen Ward
2610 New York Ave
Parkersburg WV 26101

First National Bank of Oregon
Trustee for Lathan Flanagan
31033 Foxridge Ln
Eugene OR 97405

Appalachian Royalty Co
3049 Robert C Byrd Dr
Beckley WV 25801

Linda Sue Hill
626 Thorn Grove Pike Rd
Strawberry Plains TN 37871

Warren R & Lena G Haught
12864 Staunton Turnpike
Smithville WV 26178

Nelva Jean Ford
8805 Mid Haven Circle
Granbury TX 76048

Barry D Haught , Ira Haught,
Robin J Cook
Trustees for the Haught Family Trust
210 E Main St
Harrisville WV 26362

4708510282

RECEIVED
Office of Oil and Gas
MAR 04 2016
WV Department of
Environmental Protection

Coal Owners Continued:

Holmes & Vada J Lemon
1295 South Spring St
Harriville WV 26362

Karen Louise Plants
PO box 7304
Glen Rose TX 76043

Betty Lou Fankhauser
753 Cedarcrest Dr
Bound Brook NJ 08805

Patricia L Moore
170 Birdhouse Land
Bridgeport WV 26330

Philip Latham Sherror
203 SW Bridge St #124
Grants Pass OR 97526

Ann S Batta
FKA Ann Sherror Killen
PO Box 27570
San Deigo CA 92198

Ellen Sherror Francaviglia
3117 Lakeview Dr.
Salem OR 97304

Joseph Flanagan
PO Box 2
Smithville WV 26178

Gregory Flanagan
34 Willow St
Pennsboro WV 26415

4708510282

RECEIVED
Office of Oil and Gas
MAR 04 2016
WV Department of
Environmental Protection

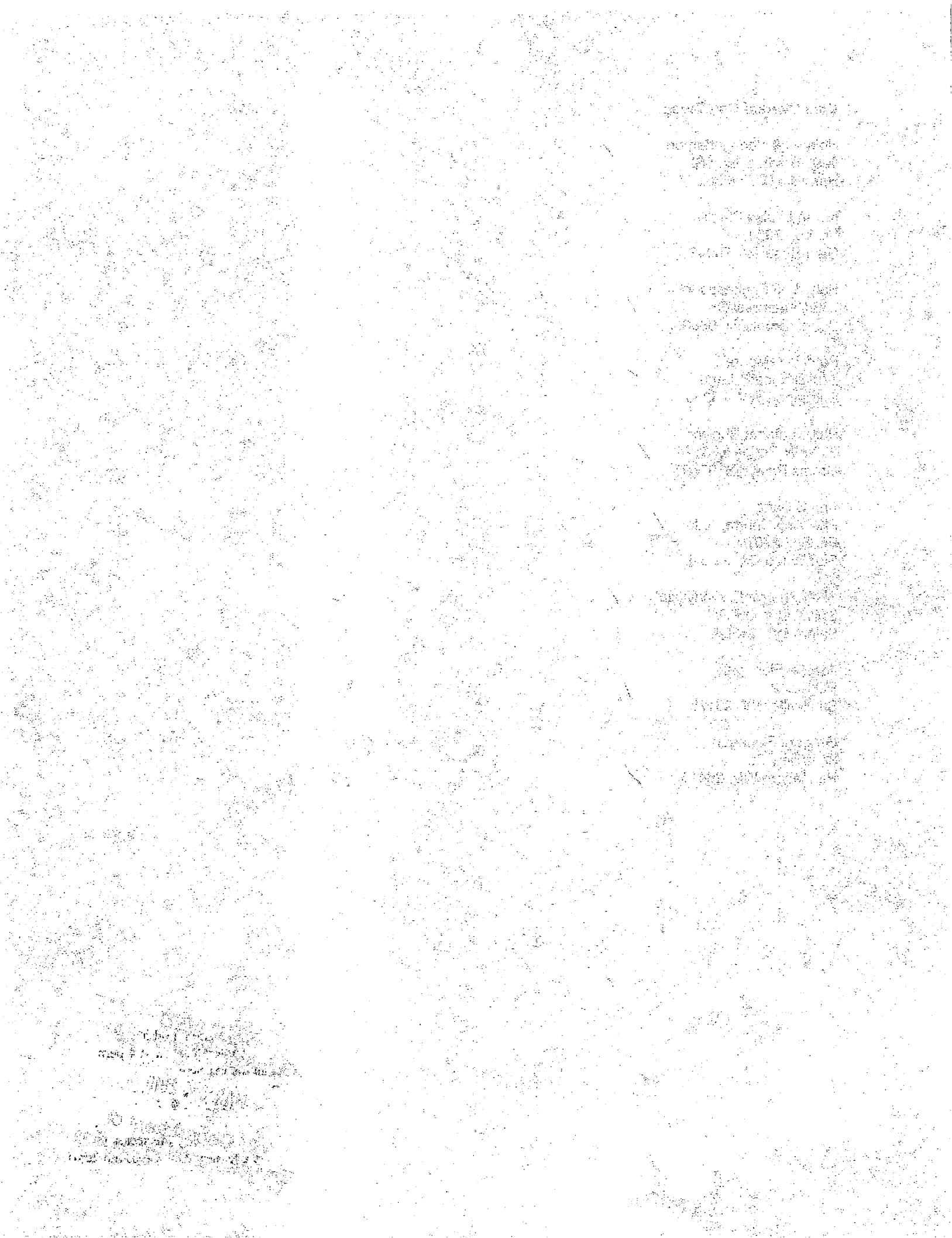

WW-6A4
(1/12)

Operator Well No. 515874

STATE OF WEST VIRGINIA
DEPARTMENT OF ENVIRONMENTAL PROTECTION, OFFICE OF OIL AND GAS
NOTICE OF INTENT TO DRILL

Pursuant to W. Va. Code § 22-6A-16(b), the Notice of Intent to Drill is only required if the notice requirements of W. Va. Code § 22-6A-10(a) have NOT been met or if the Notice of Intent to Drill requirement has NOT been waived in writing by the surface owner.

Notice Time Requirement: Notice shall be provided at least **TEN (10)** days prior to filing a permit application.
Date of Notice: 02/09/2016 **Date Permit Application Filed:** 02/19/2016

Delivery method pursuant to West Virginia Code § 22-6A-16(b)

☐ HAND DELIVERY ☒ CERTIFIED MAIL RETURN RECEIPT REQUESTED

Pursuant to W. Va. Code § 22-6A-16(b), at least ten days prior to filing a permit application, an operator shall, by certified mail return receipt requested or hand delivery, give the surface owner notice of its intent to enter upon the surface owner's land for the purpose of drilling a horizontal well: *Provided,* That notice given pursuant to subsection (a), section ten of this article satisfies the requirements of this subsection as of the date the notice was provided to the surface owner: *Provided, however,* That the notice requirements of this subsection may be waived in writing by the surface owner. The notice, if required, shall include the name, address, telephone number, and if available, facsimile number and electronic mail address of the operator and the operator's authorized representative.

Notice is hereby provided to the SURFACE OWNER(s):

Name: See Attached
Address:

Name: See Attached
Address:

Notice is hereby given:
Pursuant to West Virginia Code § 22-6A-16(b), notice is hereby given that the undersigned well operator has an intent to enter upon the surface owner's land for the purpose of drilling a horizontal well on the tract of land as follows:

State:	WV	UTM NAD 83 Easting:	506,278.12
County:	Ritchie	Northing:	4,345,367.53
District:	Clay	Public Road Access:	RT50
Quadrangle:	Pennsboro	Generally used farm name:	Jerry Morton et al
Watershed:	North Fork Hughes River		

4703510282

This Notice Shall Include:
Pursuant to West Virginia Code § 22-6A-16(b), this notice shall include the name, address, telephone number, and if available, facsimile number and electronic mail address of the operator and the operator's authorized representative. Additional information related to horizontal drilling may be obtained from the Secretary, at the WV Department of Environmental Protection headquarters, located at 601 57th Street, SE, Charleston, WV 25304 (304-926-0450) or by visiting www.dep.wv.gov/oil-and-gas/pages/default.aspx.

Notice is hereby given by:

Well Operator:	EQT Production Company	Authorized Representative:	Victoria Roark
Address:	115 Professional Place PO Box 280	Address:	115 Professional Place PO Box 280
	Bridgeport WV 26330		Bridgeport WV 26330
Telephone:	304-848-0076	Telephone:	304-848-0076
Email:	vroark@eqt.com	Email:	vroark@eqt.com
Facsimile:	304-848-0041	Facsimile:	304-848-0041

Oil and Gas Privacy Notice:
The Office of Oil and Gas processes your personal information, such as name, address and telephone number, as part of our regulatory duties. Your personal information may be disclosed to other State agencies or third parties in the normal course of business or as needed to comply with statutory or regulatory requirements, including Freedom of Information Act requests. Our office will appropriately secure your personal information. If you have any questions about our use or your personal information, please contact DEP's Chief Privacy Officer at depprivacyofficer@wv.gov.

RECEIVED
Office of Oil and Gas
MAR 04 2016
WV Department of
Environmental Protection

WW-6A5
(1/12)

Operator Well No. 515874

STATE OF WEST VIRGINIA
DEPARTMENT OF ENVIRONMENTAL PROTECTION, OFFICE OF OIL AND GAS
NOTICE OF PLANNED OPERATION

Notice Time Requirement: notice shall be provided no later than the **filing date of permit application.**
Date of Notice: 3/3/16 **Date Permit Application Filed:** 3/3/16

Delivery method pursuant to West Virginia Code § 22-6A-16(c)

☒ CERTIFIED MAIL RETURN RECEIPT REQUESTED ☐ HAND DELIVERY

4705102297

Pursuant to W. Va. Code § 22-6A-16(c), no later than the date for filing the permit application, an operator shall, by certified mail return receipt requested or hand delivery, give the surface owner whose land will be used for the drilling of a horizontal well notice of the planned operation. The notice required by this subsection shall include: (1) A copy of this code section; (2) The information required to be provided by subsection (b), section ten of this article to a surface owner whose land will be used in conjunction with the drilling of a horizontal well; and (3) A proposed surface use and compensation agreement containing an offer of compensation for damages to the surface affected by oil and gas operations to the extent the damages are compensable under article six-b of this chapter. (d) The notices required by this section shall be given to the surface owner at the address listed in the records of the sheriff at the time of notice.

Notice is hereby provided to the SURFACE OWNER(s)
(at the address listed in the records of the sheriff at the time of notice):

Name: See Attached
Address:

Name: See Attached
Address:

Notice is hereby given:
Pursuant to West Virginia Code § 22-6A-16(c), notice is hereby given that the undersigned well operator has developed a planned operation on the surface owner's land for the purpose of drilling a horizontal well on the tract of land as follows:

State:	WV	UTM NAD 83 Easting:	506,278.12
County:	Ritchie	Northing:	4,345,367.53
District:	Clay	Public Road Access:	RT50
Quadrangle:	Pennsboro	Generally used farm name:	Jerry Morton et al
Watershed:	North Fork Hughes River		

This Notice Shall Include:
Pursuant to West Virginia Code § 22-6A-16(c), this notice shall include: (1)A copy of this code section; (2) The information required to be provided by **W. Va. Code § 22-6A-10(b)** to a surface owner whose land will be used in conjunction with the drilling of a horizontal well; and (3) A proposed surface use and compensation agreement containing an offer of compensation for damages to the surface affected by oil and gas operations to the extent the damages are compensable under article six-b of this chapter. Additional information related to horizontal drilling may be obtained from the Secretary, at the WV Department of Environmental Protection headquarters, located at 601 57th Street, SE, Charleston, WV 25304 (304-926-0450) or by visiting www.dep.wv.gov/oil-and-gas/pages/default.aspx.

Well Operator:	EQT Production Company	Address:	115 Professional Place PO Box 280
Telephone:	304-848-0076		Bridgeport WV 26330
Email:	vroark@eqt.com	Facsimile:	304-848-0041

Oil and Gas Privacy Notice:
The Office of Oil and Gas processes your personal information, such as name, address and telephone number, as part of our regulatory duties. Your personal information may be disclosed to other State agencies or third parties in the normal course of business or as needed to comply with statutory or regulatory requirements, including Freedom of Information Act requests. Our office will appropriately secure your personal information. If you have any questions about our use or your personal information, please contact DEP's Chief Privacy Officer at depprivacyofficer@wv.gov.

RECEIVED
Office of Oil and Gas
MAR 04 2016
WV Department of
Environmental Protection

Surface Owners:

Jerry Morton
406 Cabin Run
Pennsboro, WV 26415

Randy Collins, Natalie Collins, Kate Collins
5368 Muscovy RD
Middleburg, FL 32068

47 051 02 0

RECEIVED
Office of Oil and Gas
MAR 04 2016
WV Department of
Environmental Protection

Surface Owners: Access Road & Other Disturbance

Jerry Morton
406 Cabin Run
Pennsboro, WV 26415

Randy Collins, Natalie Collins, Kate Collins
5368 Muscovy RD
Middleburg, FL 32068

Heartwood Forestland Fund IV, L.P.
1512 East Franklin Street, Suite 104,
Chapel Hill NC. 27514-2816

Coastal Forest Resources
dba Coastal Timberlands Company
PO Box 709
Buckhannon, WV 26201

47 0 05102 82

RECEIVED
Office of Oil and Gas
MAR 04 2016
WV Department of
Environmental Protection

Surface Owners: Pits or Impoundments

Jerry Morton
406 Cabin Run
Pennsboro, WV 26415

Corrected

Randy Collins, Natalie Collins, Kate Collins
5368 Muscovy RD
Middleburg, FL 32068

4700510282

RECEIVED
Office of Oil and Gas
MAR 04 2016
WV Department of
Environmental Protection

WEST VIRGINIA DEPARTMENT OF TRANSPORTATION
Division of Highways
1900 Kanawha Boulevard East • Building Five • Room 110
Charleston, West Virginia 25305-0430 • (304) 558-3505

Earl Ray Tomblin
Governor

Paul A. Mattox, Jr., P. E.
Secretary of Transportation/
Commissioner of Highways

May 15, 2015

James A. Martin, Chief
Office of Oil and Gas
Department of Environmental Protection
601 57th Street, SE
Charleston, WV 25304

47 0 3510282

Subject: DOH Permit for the PEN 54 Pad Site, Ritchie County

514474 PEN54H1	514475 PEN54H2	514476 PEN54H3
514477 PEN54H4	514478 PEN54H5	514479 PEN54H6
514480 PEN54H7	515874 PEN54H8	516206 PEN54H9
516207 PEN54H10	516208 PEN54H11	516209 PEN54H12
516210 PEN54H13		

Dear Mr. Martin,

This well site will be accessed from Permit #03-2015-0161 issued to EQT Production Company for access to the State Road. The well site is located off of Ritchie County Route 10/1 SLS. Approved permit must be received before the start of construction.

The operator has signed a STATEWIDE OIL AND GAS ROAD MAINTENANCE BONDING AGREEMENT and provided the required Bond. This operator is currently in compliance with the DOH OIL AND GAS POLICY dated January 3, 2012.

Very Truly Yours,

Gary K. Clayton

Gary K. Clayton, P.E.
Regional Maintenance Engineer
Central Office O&G Coordinator

Cc: Nick Bumgardner
EQT Production Company
CH, OM, D-3, File

RECEIVED
Office of Oil and Gas
MAR 04 2016
WV Department of
Environmental Protection

Anticipated Frac Additives

Chemical Names and CAS numbers

Material	Ingredient	CAS Number
Water		
Sand	Hydrotreated light petroleum distillate	14808-60-7
Friction Reducer	Tributyl tetradecyl phosphonium chloride	64742-47-8
Biocide	Ammonium chloride	81741-28-8
Scale Inhibitor	Hydrochloric Acid	12125-02-9
15% Hydrochloric Acid	Propargyl Alcohol	7647-01-0
Corrosion Inhibitor	Methanol	107-19-7
Corrosion Inhibitor	Guar Gum	67-56-1
Gelling Agent	Sodium Persulfate	9000-30-0
Oxidizing Breaker	Potassium Carbonate	7775-27-1
Buffering Agent		584-08-7

4709510282

4708510282

EQT Production

Hydraulic Fracturing Monitoring Plan

Pad ID: PEN54

Ritchie County, WV

2/29/16

RECEIVED
Office of Oil and Gas
MAR 04 2016
WV Department of
Environmental Protection

47 085 10289

Purpose

The purpose of this pad-specific Hydraulic Fracturing Monitoring Plan is to identify and notify conventional well operators near EQT hydraulic fracturing in Ritchie County, WV prior to hydraulic fracturing at the following EQT wells on the PEN54 pad: 514474, 514475,514476,514477,514478, 514479, 514480, 515874, 516206, 516207, 516208, 516209, and 516210.

Due to the apparent presence of unique geological conditions, the potential for communication between deep geologic zones exists in this area. This potential communication, via natural gas, water, or both, may occur between hydraulically fractured wells in the Marcellus formation (approximately 6,300' TVD) and existing conventional natural gas wells in the partially-depleted, relatively high permeability Alexander formation (approximately 5,200' TVD).

The plan is being implemented as an additional safety measure to be utilized in conjunction with existing best management practices and emergency action plans for the site. These additional measures include pre-notification of conventional well operators of the timing and location of the hydraulic fracturing, establishment of measures conventional well operators should implement, and assurance that the OOG is notified of the timeline, as well as any issues that may arise during fracturing.

1. Communications with Conventional Well Operators

EQT, using available data (WV Geological Survey, WVDEP website, and IHS data service), has identified all known conventional wells and well operators within 1,500 feet of this pad and the lateral sections. A map showing these wells along with a list of the wells and operators is included in **Attachment A**.

Upon approval of this plan, EQT will notify these operators, via letter, of the hydraulic fracturing schedule for these wells. A copy of this letter is included in **Attachment B**.

The letter provides recommendations to these conventional operators to 1) increase their monitoring of their wells during that time period, 2) ensure that their well head equipment is sound, and 3) provide immediate notification to EQT and the OOG in the event of any changes in their well conditions.

Specifically, the letter recommends that conventional well operators conduct the following activities during and after fracturing operations:

1. Inspect their surface equipment prior to fracturing to establish integrity and establish pre-frac well conditions
2. Observe wells closely during and after fracturing and monitor for abnormal increases in water, gas or pressure
3. Inspect or install master valves rated to 3,000 psi or other necessary equipment for wellhead integrity
4. Notify the OOG and EQT if any changes in water, gas production, pressure, or other anomalies are identified

2. Reporting

EQT will provide information relating to the hydraulic fracturing schedule, communication with conventional operators, and ongoing monitoring of the work upon request of OOG or immediately in the event of any noted abnormalities.

RECEIVED
Office of Oil and Gas
MAR 04 2016
WV Department of
Environmental Protection

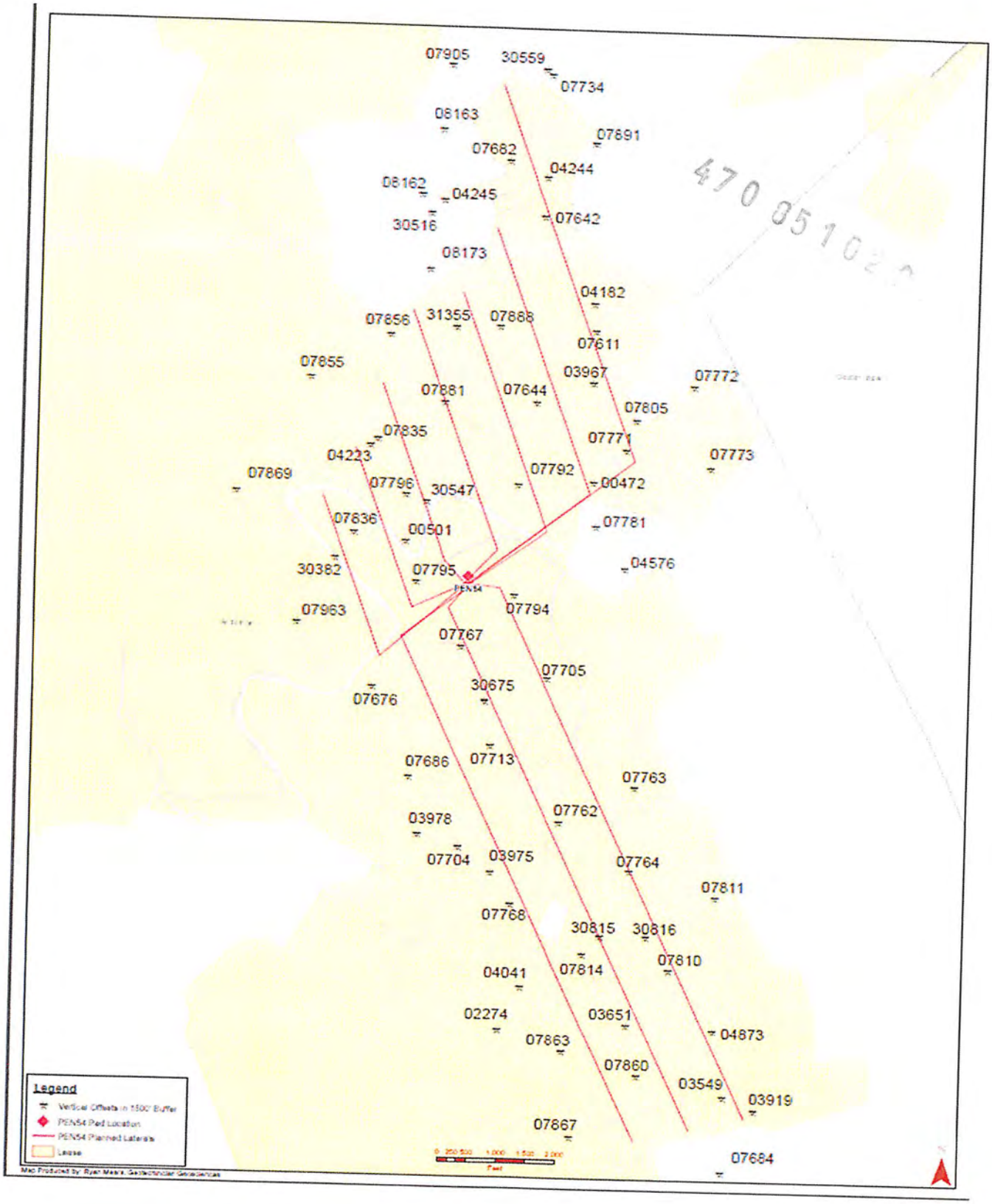

RECEIVED
Office of Oil and Gas
MAR 04 2016
WV Department of
Environmental Protection

Attachment A (pg 1)

Well ID	Prior Operator on Record	Operator-DEP*	Status	Latitude	Longitude	Vertical TD	Closest Distance from PEN54 Lateral Map View	PEN54 Horizontal TVD minus Offset Vertical TD	Hypotenuse Distance	Producing Formation	Gas Show/Pay Zone Depths	Notes
4708500472	McBurney, Glen F	OPERATOR UNKNOWN	Abandoned Well	39.263	-80.9199	1796	113	7106	7106.898409	Big Unjin	1752	
4708500501		OPERATOR UNKNOWN	Abandoned Well	39.2598	-80.9311	1777	265	7087	7091.952764	Big Unjin	1705	
4708502274	Hodge, T.F.	MOUNTAIN STATE OIL COMPANY LLC	GAS - Active	39.2349	-80.9249	2404	1319	7714	7825.954063	Big Lime, Big Injun, Berea, U. Dev	1842-2367	
4708503549	Mulvin Oil Corp.	MOUNTAIN STATE OIL COMPANY LLC	GAS - Active	39.2316	-80.9113	2534	184	7844	7846.157786	Berea	2450	
4708503651	Mulvin Oil Corp.	MOUNTAIN STATE OIL COMPANY LLC	GAS - Active	39.2352	-80.9172	1980	231	7290	7293.658958	Big Injun	1880	
4708503919	Carnegie Natural Gas Co	EPC	Plugged	39.23089	-80.9094	2079	202	7389	7391.760616			
4708503967		EPC	Plugged	39.268067	-80.920055	1764	239	7074	7078.036239			
4708503975		EPC	Abandoned Well	39.24291	-80.92554	1924	303	7234	7240.342879	Big Injun	1668-1849	
4708503978		EPC	GAS - Active	39.24479	-80.92999	1845	1177	7155	7251.162252	Big Injun	1653-1790	
4708504041	Mulvin Oil Corp.	MOUNTAIN STATE OIL COMPANY LLC	GAS - Active	39.2371	-80.9236	2506	658	7816	7843.648386	Big Injun, Weir	2006-2284	
4708504182	Haught, Glen L and Sons	KEY OIL COMPANY	GAS - Active	39.2722	-80.9201	2410	235	7720	7723.575921	Big Injun, Weir	1876-2141	
4708504223	Haught, Glen L and Sons	G HAUGHT & SONS	Never Drilled	39.26472	-80.93333	1051	249	10636	10638.91428			
4708504244	Carnegie Natural Gas Co	EPC	Abandoned Well	39.27859	-80.92312	2017	180	7327	7329.210667			
4708504245	Carnegie Natural Gas Co	EPC	Plugged	39.277328	-80.929227	1732	1020	7042	7115.487615			
4708504576	Perkins Oil and Gas	PERKINS OIL & GAS INC	GAS - Active	39.2586	-80.9179	2535	1459	7845	7979.517905	Big Injun	1672-1757	
4708504873	Carnegie Natural Gas Co	EPC	O&G - Active	39.235	-80.912	5990	135	11300	11300.80639	Bradford, Riley, Benson, Alexander	4222-5040	
4708507611	Haddad & Brooks, Inc.	KEY OIL COMPANY	GAS - Active	39.2708	-80.92	5213	97	10523	10523.44706	Riley, Benson, Alexander	4300-4984	
4708507642	Haddad & Brooks, Inc.	KEY OIL COMPANY	GAS - Active	39.2766	-80.9232	5300	75	10610	10610.26508	Riley, Benson, Alexander	4429-5094	
4708507644	Haddad & Brooks, Inc.	KEY OIL COMPANY	GAS - Active	39.267	-80.9234	5375	351	10685	10690.76358	Riley, Benson, Alexander	4500-5186	
4708507676	Eastern American Energy Corp	ENERGY CORPORATION OF AMERICA	O&G - Active	39.2523	-80.9329	4506	822	9816	9850.357354	Maxton, Big Injun, Warren, Riley	1688-4346	
4708507682	KC Energy, A Partnership	KEY OIL COMPANY	GAS - Active	39.2794	-80.9254	5123	333	10433	10438.31299	Riley, Benson, Alexander	4215-4891	
4708507684	Eastern American Energy Corp	ENERGY CORPORATION OF AMERICA	O&G - Active	39.2277	-80.9113	5389	967	10699	10742.61095	Warren, Riley	3427-4602	
4708507686	Eastern American Energy Corp	ENERGY CORPORATION OF AMERICA	O&G - Active	39.2477	-80.9306	4942	906	10252	10291.95511	Warren, Riley	3307-4797	
4708507704	Eastern American Energy Corp	ENERGY CORPORATION OF AMERICA	O&G - Active	39.2442	-80.9275	4988	620	10298	10316.64694	Warren, Bradford	3335-4475	
4708507705	Eastern American Energy Corp	ENERGY CORPORATION OF AMERICA	O&G - Active	39.2529	-80.9224	4953	84	10263	10263.34375	Big Injun, Warren, Speechley, Riley	1909-4447	
4708507713	Eastern American Energy Corp	ENERGY CORPORATION OF AMERICA	O&G - Active	39.2494	-80.9257	4678	336	9988	9993.649984	Warren, Speechley, Riley	3381-4528	
4708507734		KEY OIL COMPANY	O&G - Active	39.2839	-80.923	5220	839	10530	10563.37167	Riley, Benson, Alexander	4322-5013	
4708507762	Eastern American Energy Corp	ENERGY CORPORATION OF AMERICA	O&G - Active	39.2455	-80.9215	4773	174	10083	10084.50123	Maxton, Keener, Warren, Riley	1932-4587	
4708507763	Eastern American Energy Corp	ENERGY CORPORATION OF AMERICA	GAS - Active	39.2474	-80.917	5013	670	10323	10344.71986	Maxton, Keener, Warren, Riley	1900-4525	
4708507764	Eastern American Energy Corp	ENERGY CORPORATION OF AMERICA	GAS - Active	39.2431	-80.9172	4521	15	9831	9831.011443	Big Injun, Warren, Bradford	1792-4310	
4708507767	Eastern American Energy Corp	ENERGY CORPORATION OF AMERICA	O&G - Active	39.2544	-80.9276	4678	90	9988	9988.405478	Warren, Riley	3349-4491	
4708507768	Eastern American Energy Corp	ENERGY CORPORATION OF AMERICA	GAS - Active	39.2413	-80.9243	4604	219	9914	9916.418557	Maxton, Big Injun, Warren, Speachley, Riley	1858-4522	
4708507771	Eastern American Energy Corp	ENERGY CORPORATION OF AMERICA	GAS - Active	39.2647	-80.918	5286	86	10596	10596.34899	Warren, Riley, Benson	3265-5058	
4708507772	Eastern American Energy Corp	ENERGY CORPORATION OF AMERICA	O&G - Active	39.268	-80.914	5265	1373	10575	10663.75891	Warren, Riley, Benson, Alexander	3255-5061	
4708507773	Eastern American Energy Corp	ENERGY CORPORATION OF AMERICA	GAS - Active	39.2639	-80.9129	5265	1288	10575	10653.14831	Warren, Speechley, Riley, Benson	3252-5082	
4708507781	Eastern American Energy Corp	ENERGY CORPORATION OF AMERICA	GAS - Active	39.2607	-80.9197	5046	547	10356	10370.4361	Warren, Riley, Alexander	3064-4866	
4708507792	Eastern American Energy Corp	ENERGY CORPORATION OF AMERICA	GAS - Active	39.2628	-80.9244	5148	205	10458	10460.00903	Warren, Riley, Alexander	3176-4978	
4708507794	Eastern American Energy Corp	ENERGY CORPORATION OF AMERICA	O&G - Active	39.2571	-80.9245	5160	160	10470	10471.22247	Maxton, Keener, Big Injun, Warren, Riley, Benson	1640-4969	
4708507795	Eastern American Energy Corp	ENERGY CORPORATION OF AMERICA	GAS - Active	39.2577	-80.9304	5221	205	10531	10532.99511	Big Injun, Warren, Riley, Benson	1838-5033	
4708507796	Eastern American Energy Corp	ENERGY CORPORATION OF AMERICA	GAS - Active	39.2619	-80.9299	5027	251	10337	10340.04691	Keener, Big Injun, Warren, Riley, Benson	1590-4862	
4708507805		PERKINS OIL & GAS INC	GAS - Active	39.2662	-80.9174	2275	250	7585	7589.118855	Big Injun	1876	
4708507810	Eastern American Energy Corp	ENERGY CORPORATION OF AMERICA	GAS - Active	39.2381	-80.9147	5456	106	10766	10766.52182	Warren, Riley	3472-4621	
4708507811	Eastern American Energy Corp	ENERGY CORPORATION OF AMERICA	GAS - Active	39.2418	-80.912	4817	1138	10127	10190.73957	Maxton, Keener, Warren, Balltown, Riley	2004-4664	
4708507814	Eastern American Energy Corp	ENERGY CORPORATION OF AMERICA	GAS - Active	39.2388	-80.9199	4452	399	9762	9770.150715	Maxton, Warren, Riley	1642-4321	
4708507835	Eastern American Energy Corp	ENERGY CORPORATION OF AMERICA	GAS - Active	39.265	-80.9329	5331	399	10641	10648.47792	Warren, Riley, Alexander	3334-5124	
4708507836	Eastern American Energy Corp	ENERGY CORPORATION OF AMERICA	GAS - Active	39.2602	-80.9342	5075	282	10385	10388.82809	Warren, Riley, Benson	3133-4639	
4708507855	Eastern American Energy Corp	ENERGY CORPORATION OF AMERICA	GAS - Active	39.2681	-80.937	5365	1235	10675	10746.20165	Warren, Riley, Alexander	3322-5106	
4708507856	Eastern American Energy Corp	ENERGY CORPORATION OF AMERICA	GAS - Active	39.2704	-80.9323	5314	514	10624	10636.42666	Warren, Riley, Alexander	3280-5068	
4708507860	Eastern American Energy Corp	ENERGY CORPORATION OF AMERICA	O&G - Active	39.2326	-80.9165	4446	434	9756	9765.64857	Warren, Riley	3133-4274	
4708507863	Eastern American Energy Corp	ENERGY CORPORATION OF AMERICA	O&G - Active	39.2338	-80.921	4534	472	9844	9855.309229	Warren, Riley	3212-4354	
4708507867	Eastern American Energy Corp	ENERGY CORPORATION OF AMERICA	GAS - Active	39.2294	-80.9204	5196	966	10506	10550.31715	Warren, Riley, Benson	3193-4981	
4708507869	Eastern American Energy Corp	ENERGY CORPORATION OF AMERICA	GAS - Active	39.2622	-80.9413	5380	1477	10690	10791.5536	Warren, Riley, Alexander	3445-5221	
4708507881	Eastern American Energy Corp	ENERGY CORPORATION OF AMERICA	GAS - Active	39.267	-80.9289	5272	5	10582	10582.00118	Warren, Riley, Alexander	3315-5112	
4708507888	Eastern American Energy Corp	ENERGY CORPORATION OF AMERICA	GAS - Active	39.2709	-80.9257	5280	402	10590	10597.62728	Warren, Riley, Alexander	3315-5121	
4708507891	Eastern American Energy Corp	ENERGY CORPORATION OF AMERICA	GAS - Active	39.2804	-80.9203	5371	1149	10681	10742.62361	Warren, Riley, Benson, Alexander	3390-5193	
4708507905	Eastern American Energy Corp	ENERGY CORPORATION OF AMERICA	GAS - Active	39.2843	-80.929	5146	942	10456	10498.34749	Riley, Alexander	4331-5015	
4708507963	Eastern American Energy Corp	ENERGY CORPORATION OF AMERICA	GAS - Active	39.2555	-80.9375	5172	1156	10482	10545.55167	Riley	4338-4712	
4708508162		KEY OIL COMPANY	GAS - Active	39.2776	-80.9306	5140	1412	10450	10544.96297	Riley, Benson, Alexander	4326-4994	
4708508163		KEY OIL COMPANY	GAS - Active	39.281	-80.9294	5090	1216	10400	10470.84791	Riley, Benson, Alexander	4276-4933	
4708508173		KEY OIL COMPANY	GAS - Active	39.2738	-80.93	4991	712	10301	10325.57722	Riley, Benson, Alexander	4239-4891	
4708530382		I H BEREN	GAS - Active	39.25889	-80.93528	1860	161	7170	7171.807373	Big Injun	1709-1714	
4708530516		HOPE NAT GAS	GAS - Active	39.27667	-80.93	1733	1143	7043	7135.145268	Maxton, Big Injun	1550-1694	
4708530547		PGH & WV GAS	GAS - Active	39.26222	-80.93111	1823	35	7133	7133.085868	Big Injun, Squaw	1708-1800	
4708530559		PGH & WV GAS	GAS - Active	39.28417	-80.92333	1837	784	7147	7189.872391	Maxton	1577-1595	
4708530675		PGH & WV GAS	GAS - Active	39.25167	-80.92611	2041	107	7351	7351.778696	Maxton, Big Injun	1750-1994	
4708530815		F S DEEM	Unknown	39.23972	-80.91889	1693	2	7003	7003.000286	Unknown	Unknown	
4708530816		F S DEEM	Unknown	39.23972	-80.91611	1087	232	10618	10620.53426	Unknown	Unknown	
4708531355		EPC	Unknown	39.27083	-80.92833	1999	310	7309	7315.571133	Maxton, Big Injun	1767-1994	

4708510282

RECEIVED
Office of Oil and Gas
MAR 04 2016
WV Department of
Environmental Protection

Attachment A (pg2)

625 Liberty Ave, Suite 1700
Pittsburgh PA 15222
www.eqt.com

TEL: (412) 395-3305
FAX: (412) 395-2156

John Centofanti
Corporate Director,
Environmental Affairs

(date)

[Conventional Well Operator]
[address]
[state]

4703510282

RE: Ritchie County Hydraulic Fracturing Notice

Dear Sir/Madam,

EQT has developed a Marcellus pad (Pennsboro 54 pad) located in Ritchie County, WV. As an owner or operator of conventional natural gas wells in this area, we are requesting your assistance in this matter.

Due to the apparent presence of unique geological conditions, the potential for communication between deep geologic zones exists in this area. This potential communication, via natural gas, water, or both, may occur between hydraulically fractured wells in the Marcellus formation (approximately 6,300' TVD) and existing conventional natural gas wells in the partially-depleted, relatively high permeability, Alexander formation (approximately 5,200' TVD).

EQT anticipates conducting hydraulic fracturing at the Pennsboro 54 pad during the [first,second, third,fourth] quarter of [year]. We have identified conventional natural gas wells operated by your company within 1,500' (lateral distance) of our new/planned laterals. Plats for each well on this pad are attached.

We recommend that conventional well operators conduct the following activities before, during, and after fracturing operations:

1. Inspect surface equipment, prior to fracturing, to establish integrity and establish well conditions.
2. Observe wells closely during and after fracturing and monitor for abnormal increases in water, gas, or pressure.
3. Inspect or install master valves rated to 3,000 psi or other necessary equipment for wellhead integrity.
4. Notify the OOG and EQT if any changes in water, gas production, pressure, or other anomalies are identified.

Please feel free to contact me at 412-395-3305 with any questions or comments. You may also contact the West Virginia Office of Oil and Gas at 304-926-0440.

Sincerely,
EQT Production

John Centofanti
Corporate Director, Environmental Affairs

cc: James Martin, WV Office of Oil and Gas

RECEIVED
Office of Oil and Gas
MAR 04 2016
WV Department of
Environmental Protection

Attachment B

$WORKSPACE$
$PENTRILS$
$PLTDRVR$

API# 8510222
API# 8510225
API# 8510226
API# 8510227
API# 8510228
API# 8510229
API# 8510230
API# 8510231
API# 8510232

PROJECT INFORMATION

PROJECT NAME: EQT PEN 54

SURFACE OWNER:

1. RANDY, NATALIE & KATE COLLINS
   CLAY DISTRICT, RITCHIE COUNTY, WV
   TAX MAP 31-05 (1/2 INTEREST)
   TOTAL PROPERTY AREA: 243.50 +/- ACRES
   TOTAL DISTURBANCE AREA: 32.67 +/- ACRES
2. JERRY MORTON
   CLAY DISTRICT, RITCHIE COUNTY, WV
   TAX MAP 31-05 (1/2 INTEREST)
   TOTAL PROPERTY AREA: 243.50 +/- ACRES
   TOTAL DISTURBANCE AREA: 32.67 +/- ACRES
3. HEARTWOOD FORESTLAND FUND IV LLC
   CLAY DISTRICT, RITCHIE COUNTY, WV
   TAX MAP 31-11, 31-14, 31-15
   TOTAL PROPERTY AREA: 590.19 +/- ACRES
   TOTAL DISTURBANCE AREA: 18.63 +/- ACRES
4. COASTAL FOREST RESOURCES DBA COASTALTIMBERLANDS.COM
   CLAY DISTRICT, RITCHIE COUNTY, WV
   TAX MAP 32-02
   TOTAL PROPERTY AREA: 42.51 +/- ACRES
   TOTAL DISTURBANCE AREA: 0.73 +/- ACRES

OIL AND GAS ROYALTY OWNER:
W. FLANAGAN HRS, ET AL (500 +/- ACRES)
CLAY DISTRICT
RITCHIE COUNTY, WV

SITE LOCATION:
THE EQT PEN 54 WELL PAD IS LOCATED 1.9 MILES +/- SOUTHEAST OF THE JUNCTION OF US ROUTE 50 AND WV 74.

LOCATION COORDINATES

EQT PEN 54 WELL PAD CENTER
LATITUDE: 39.257810 LONGITUDE: 80.927222 (NAD 83)
EQT PEN 54 FLOWBACK PIT CENTER
LATITUDE: 39.256871 LONGITUDE: 80.926494 (NAD 83)
EQT PEN 54 COMPLETION PIT CENTER
LATITUDE: 39.258129 LONGITUDE: 80.923194 (NAD 83)

GENERAL DESCRIPTION

THE WELL PAD, FLOWBACK PIT, ACCESS ROAD, AND COMPLETION PIT ARE BEING CONSTRUCTED TO AID IN THE DEVELOPMENT OF INDIVIDUAL MARCELLUS SHALE GAS WELLS.

SITE DISTURBANCE COMPUTATIONS

WELL PAD/FLOWBACK PIT AREA = 14.66 +/- ACRES
ACCESS ROAD AREA = 30.53 +/- ACRES
COMPLETION PIT AREA = 6.84 +/- ACRES
TOTAL SITE DISTURBANCE AREA = 52.03 +/- ACRES

ENTRANCE PERMIT

EQT PRODUCTION COMPANY WILL OBTAIN AN ENCROACHMENT PERMIT (FORM MM-109) FROM THE WEST VIRGINIA DEPARTMENT OF TRANSPORTATION DIVISION OF HIGHWAYS, PRIOR TO COMMENCEMENT OF CONSTRUCTION ACTIVITIES.

MISS UTILITY STATEMENT

MISS UTILITY OF WEST VIRGINIA WAS NOTED FOR THE LOCATING OF UTILITIES PRIOR TO THIS PROJECT DESIGN; TICKET #1430282102. IN ADDITION, MISS UTILITY WILL BE CONTACTED PRIOR TO START OF THE PROJECT.

ENVIRONMENTAL NOTES

A WETLAND DELINEATION WAS PERFORMED BY POTESTA & ASSOCIATES ON 9/6/2013, 9/12/2013, 9/13/2013, 10/14/2014, 10/15/2014, AND 1/15/2015 TO REVIEW THE SITE FOR WATERS AND WETLANDS THAT ARE MOST LIKELY WITHIN THE REGULATORY PURVIEW OF THE U.S. ARMY CORPS OF ENGINEERS (USACE) AND/OR THE WEST VIRGINIA DEPARTMENT OF ENVIRONMENTAL PROTECTION (WVDEP). THE 10/2/2013 AND 2/5/2015 REPORT FOR EQT PEN 54 PREPARED BY POTESTA & ASSOCIATES, INC., SUMMARIZES THE RESULTS OF THE FIELD DELINEATION. THE REPORT DOES NOT, IN ANY WAY, REPRESENT A JURISDICTIONAL DETERMINATION OF THE LANDWARD LIMITS OF WATERS AND WETLANDS WHICH MAY BE REGULATED BY THE USACE OR THE WVDEP. IT IS STRONGLY RECOMMENDED THAT THE AFORMENTIONED AGENCIES BE CONSULTED IN AN EFFORT TO GAIN WRITTEN CONFIRMATION OF THE DELINEATION DESCRIBED BY THIS REPORT PRIOR TO ENGAGING CONSTRUCTION ON THE PROPERTY DESCRIBED HEREIN. THE DEVELOPER SHALL OBTAIN THE APPROPRIATE PERMITS FROM THE FEDERAL AND/OR STATE REGULATORY AGENCIES PRIOR TO ANY PROPOSED IMPACTS TO WATERS OF THE U.S., INCLUDING WETLAND FILLS AND STREAM CROSSINGS.

GEOTECHNICAL NOTES

A SUBSURFACE INVESTIGATION HAS NOT BEEN PERFORMED AS OF 02/17/2015. THE ENGINEER AND SURVEYOR ARE NOT RESPONSIBLE FOR UNFORSEEN SUBSURFACE IRREGULARITIES CAUSING ADDITIONAL WORK OR ADDITIONAL CONSTRUCTION MEASURES REQUIRED BEYOND THOSE STANDARD PRACTICES SHOWN ON THIS PLAN AS A RESULT OF ANY OTHER GEOTECHNICAL COMPLICATIONS ENCOUNTERED DURING CONSTRUCTION.

RESTRICTIONS NOTES

1. THERE ARE INTERMITTENT STREAMS, LAKES, PONDS, OR RESERVOIRS WITHIN 100 FEET OF THE PROJECT LOD. THERE ARE WETLANDS WITHIN 100 FEET OF THE LOD, AND A WAIVER FROM THE WVDEP WILL BE APPLIED FOR THROUGH THE ARMY CORPS OF ENGINEERS BY EQT PRODUCTION COMPANY.
2. THERE ARE NO NATURALLY PRODUCING TROUT STREAMS WITHIN 300 FEET OF THE PAD AND LOD.
3. THERE ARE NO GROUNDWATER INTAKE OR PUBLIC WATER SUPPLY FACILITIES WITHIN 1000 FEET OF THE PAD AND LOD.
4. THERE ARE NO KNOWN EXISTING WATER WELLS OR DEVELOPED SPRINGS WITHIN 250 FEET OF THE WELL(S) BEING DRILLED. STANTEC AND SMITH LAND SURVEYING ARE NOT RESPONSIBLE FOR ANY EXISTING WATER WELL OR DEVELOPED SPRING DISCOVERED DURING CONSTRUCTION.
5. THERE ARE NO OCCUPIED DWELLING STRUCTURES WITHIN 625 FEET OF THE CENTER OF THE PAD.
6. THERE ARE NO AGRICULTURAL BUILDINGS LARGER THAN 2,500 SQUARE FEET WITHIN 625 FEET OF THE CENTER OF THE PAD.

$DATE$
WORKSPACE: DOT_2006 (SURVEY FEET)
$FILE$

EQT PEN 54 SI
EQT PRODUCTIO
PROPOSED WELL NO. H1 WV5
H3 WV 514476, H4 WV5144
H6 WV514479, H7 WV514480, H8 W
H10 WV516207, H11
SITUATE ON THE WATERS OF N
RIVER IN CLAY DISTRICT, RIT

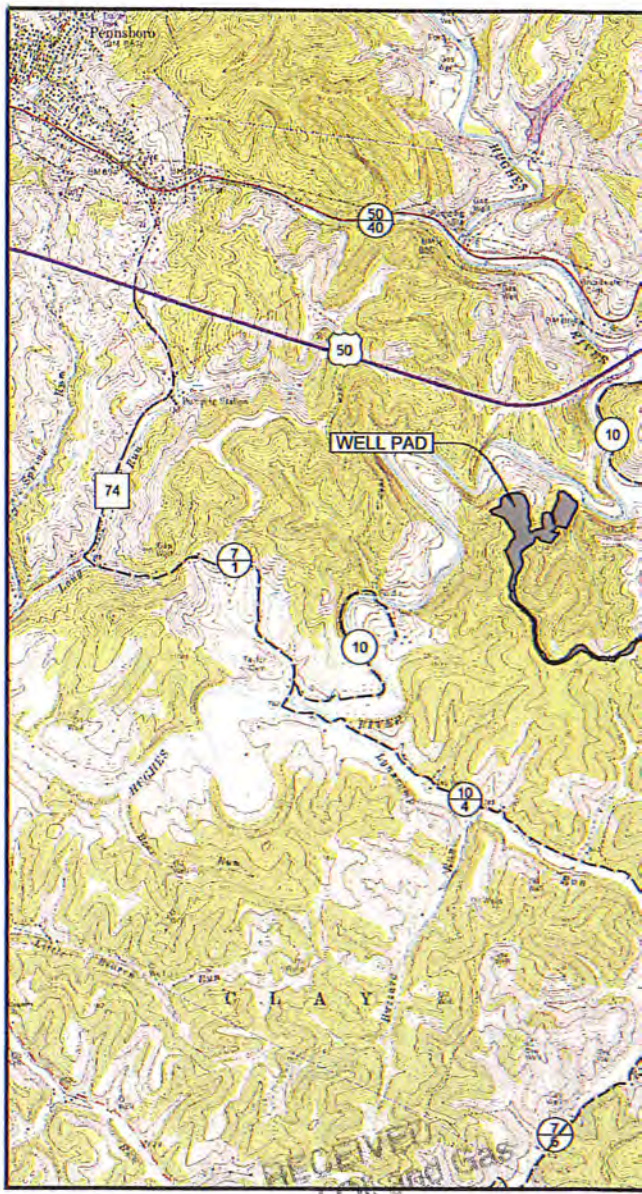

PENNSBORO QUADRANG
WEST VIRGINIA
7.5 MINUTE SERIES

2000' 0'

RECEIVED
Office of Oil and Gas
MAR 25 2016
WV Department of
Environmental Protection

TE PLAN
N COMPANY

4474, H2 WV514475,
7, H5 WV514478,
V515874, H9 WV516206,
WV516208
ORTH FORK HUGHES
CHIE COUNTY, WV

APPROVED
WVDEP OOG
8/14/2015

4703510282

4703510282

Stantec
111 ELKINS STREET
FAIRMONT, WV 26554
PHONE: 304-367-9401

LIST OF DRAWINGS	
SHEET NO.	DESCRIPTION
1	TITLE SHEET
2	GENERAL NOTES
3-4	OVERALL PLAN SHEET INDEX
5-12	ACCESS ROAD AND WELL SITE LAYOUT
13-23	WELL PAD/FLOWBACK PIT/ COMPLETION PIT CROSS SECTIONS
24-29	ACCESS ROAD PROFILE
30-33	ACCESS ROAD CROSS SECTIONS
34	EXCESS MATERIAL STOCKPILE PROFILES
35-37	EXCESS MATERIAL STOCKPILE CROSS SECTIONS
38	TOPSOIL STOCKPILE PROFILES
39-44	TOPSOIL STOCKPILE CROSS SECTIONS
45-47	RECLAMATION PLAN
48-51	CONSTRUCTION DETAILS
52-53	CONSTRUCTION QUANTITIES

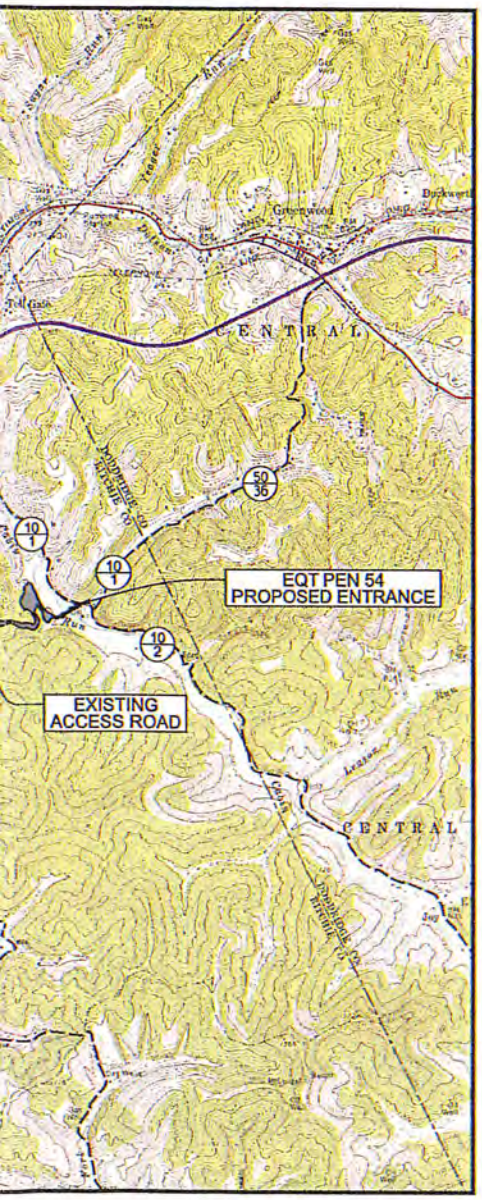

NORTH
GRID NORTH AND ELEVATIONS SHOWN HEREON WERE ESTABLISHED BY SURVEY GRADE GPS

LEGEND

EX. INDEX CONTOUR	1550	PROP. INDEX CONTOUR	1550
EX. INTERMEDIATE CONTOUR		PROP. INTERMEDIATE CONTOUR	
EX. BOUNDARY LINE		PROP. CUT LINE	C
EX. EDGE OF ROAD PAVEMENT		PROP. FILL LINE	F
EX. GUARDRAIL		PROP. LIMITS OF DISTURBANCE	
EX. FENCELINE		ENVIRONMENTAL ASSESSMENT AREA OF DELINEATION	
EX. GATE		PROP. WELL HEAD	
EX. OVERHEAD UTILITY	E	PROP. CONTAINMENT BERM	
EX. OVERHEAD UTILITY R/W		PROP. ROAD CENTERLINE	
EX. UTILITY POLE		PROP. FLAT BOTTOM DITCH WITH CHECK DAMS	
EX. GUY WIRE		PROP. V-DITCH WITH CHECK DAMS	
EX. TELEPHONE LINE	T	PROP. CULVERT	
EX. GASLINE	G	PROP. RIP-RAP OUTLET PROTECTION	
EX. GASLINE R/W		PROP. RIP-RAP INLET PROTECTION	
EX. WATERLINE	W	PROP. COMPOST FILTERSOCK	CF
EX. WATER WELL		PROP. TREELINE	
EX. GAS WELL		PROP. ROCK CONSTRUCTION ENTRANCE	
EX. TREELINE		X-SECTION GRID INDEX	
EX. REFERENCE TREE		X-SECTION GRID INTERMEDIATE	
EX. DELINEATED STREAM		X-SECTION PROPOSED GRADE	
EX. DELINEATED WETLAND		X-SECTION EXISTING GRADE	
EX. BUILDING			

Professional Energy Consultants
A DIVISION OF SMITH LAND SURVEYING, INC.
SLS
SURVEYORS
ENGINEERS
ENVIRONMENTAL
PROJECT MGMT.
WWW.SLSSURVEYS.COM
(304) 462-5634

RICHARD L. GAINES
REGISTERED
17224
STATE OF
WEST VIRGINIA
PROFESSIONAL ENGINEER
8-3-2015

THIS DOCUMENT WAS PREPARED BY:
STANTEC
FOR:
EQT PRODUCTION COMPANY

MISS Utility of West Virginia
1-800-245-4848
West Virginia State Law
(Section XIV, Chapter 24-C)
Requires that you call two
business days before you dig in
the state of West Virginia.
IT'S THE LAW!!

Michael Dale
3/9/16

OPERATOR
EQT PRODUCTION COMPANY
OPERATOR ID: 306686
P.O. BOX 280
BRIDGEPORT, WV 26630
PHONE: (304) 348-3870

ENGINEER
STANTEC CONSULTING,INC.
111 ELKINS STREET
FAIRMONT, WV 26554
PHONE: (304) 367-9401

SURVEYOR
SMITH LAND SURVEYING, INC.
12 VANHORN DRIVE
PO BOX 150
GLENVILLE, WV 26351
PHONE: (304) 462-5634

TITLE SHEET
EQT PEN 54
CLAY DISTRICT
RITCHIE COUNTY, WV

DATE:	02/24/2015
SCALE:	AS SHOWN
DESIGNED BY:	RJH
FILE NO.:	SLS-8083
SHEET	1 OF 53
REV:	08/03/2015

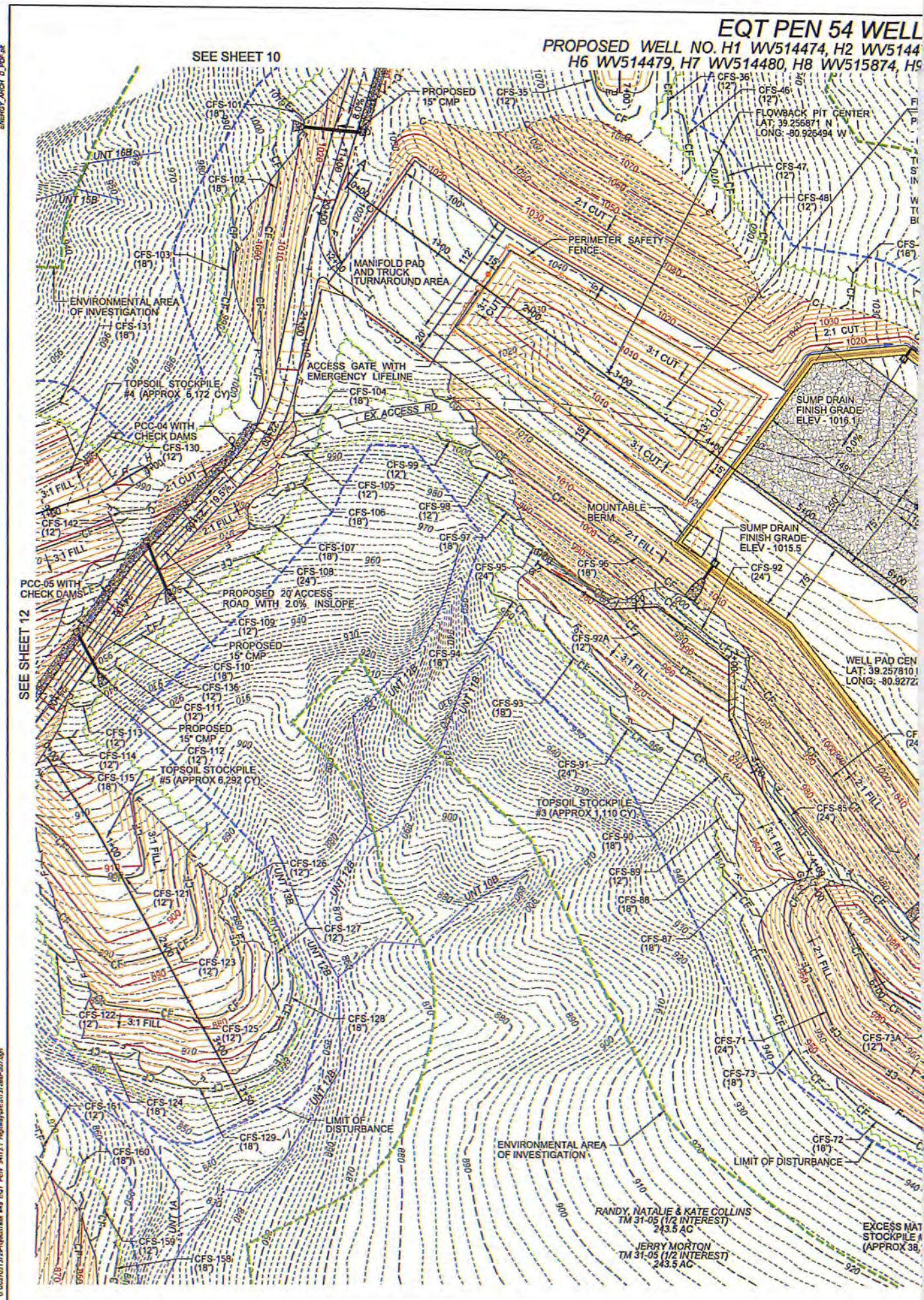
EQT PEN 54 WELL
PROPOSED WELL NO. H1 WV514474, H2 WV5144
H6 WV514479, H7 WV514480, H8 WV515874, H9
SEE SHEET 10
SEE SHEET 12
PROPOSED 15" CMP
FLOWBACK PIT CENTER
LAT: 39.256871 N
LONG: -80.926494 W
PERIMETER SAFETY FENCE
MANIFOLD PAD AND TRUCK TURNAROUND AREA
ACCESS GATE WITH EMERGENCY LIFELINE
ENVIRONMENTAL AREA OF INVESTIGATION
TOPSOIL STOCKPILE #4 (APPROX 6,172 CY)
PCC-04 WITH CHECK DAMS
PCC-05 WITH CHECK DAMS
PROPOSED 20' ACCESS ROAD WITH 2.0% INSLOPE
TOPSOIL STOCKPILE #5 (APPROX 6,292 CY)
TOPSOIL STOCKPILE #3 (APPROX 1,110 CY)
MOUNTABLE BERM
SUMP DRAIN FINISH GRADE ELEV - 1016.1
SUMP DRAIN FINISH GRADE ELEV - 1015.5
WELL PAD CEN
LAT: 39.257810
LONG: -80.9272
LIMIT OF DISTURBANCE
ENVIRONMENTAL AREA OF INVESTIGATION
RANDY, NATALIE & KATE COLLINS TM 31-05 (1/2 INTEREST) 243.5 AC
JERRY MORTON TM 31-05 (1/2 INTEREST) 243.5 AC
EXCESS MAT
STOCKPILE #
(APPROX 38,
EX ACCESS RD
UNT 16B
UNT 15B
UNT 12B
UNT 10B
UNT 7A
2:1 CUT
3:1 CUT
2:1 FILL
3:1 FILL

PAD SITE PLAN

75, H3 WV514476, H4 WV514477, H5 WV514478,
WV516206, H10 WV516207, H11 WV516208

4708510282

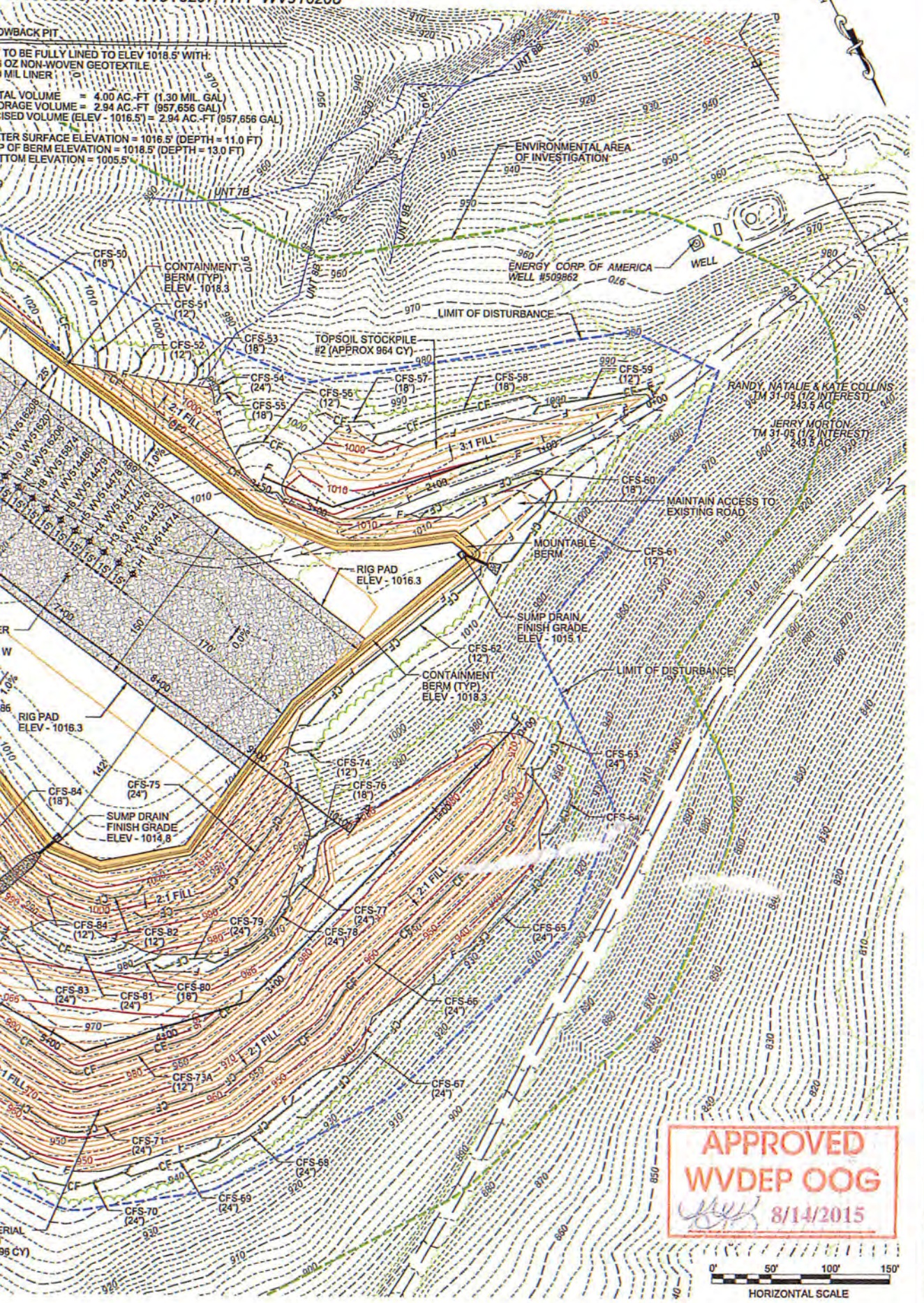

Stantec
111 ELKINS STREET
FAIRMONT, WV 26554
PHONE: 304-367-9401

Professional Energy Consultants
A DIVISION OF SURVEYING INC.
SLS
SURVEYORS
ENGINEERS
ENVIRONMENTAL
PROJECT MGMT.
WWW.SLSSURVEYS.COM
(304) 462-5634

RICHARD L. GAINES
REGISTERED
17220
STATE OF
WEST VIRGINIA
PROFESSIONAL ENGINEER

THIS DOCUMENT WAS PREPARED BY:
STANTEC
FOR:
EQT PRODUCTION COMPANY

WELL PAD LAYOUT
EQT PEN 54
CLAY DISTRICT
RITCHIE COUNTY, WV

MAC 3/9/16

DATE:	02/24/2015
SCALE:	AS SHOWN
DESIGNED BY:	RJH
FILE NO.:	SLS-8083
SHEET	11 OF 53
REV:	08/03/2015