West Virginia Department of Environmental Protection
Division of Air Quality

Joe Manchin III
Governor

Stephanie R. Timmermeyer
Cabinet Secretary

Permit to Operate

Pursuant to

Title V

of the Clean Air Act

Issued to:

Koppers Inc.
Follansbee Tar Plant, Follansbee, West Virginia
R30-00900001-2006

John A. Benedict
Director

Issued: January 4, 2006 • Effective: January 18, 2006
Expiration: January 4, 2011 • Renewal: July 4, 2010

Permit Number: **R30-00900001-2006**

Permittee: **Koppers Inc.**

Facility Name: **Follansbee Tar Plant**

Mailing Address: **436 Seventh Ave, Pittsburgh, PA 15219**

This permit is issued in accordance with the West Virginia Air Pollution Control Act (West Virginia Code §§ 22-5-1 et seq.) and 45CSR30 — Requirements for Operating Permits. The permittee identified at the above-referenced facility is authorized to operate the stationary sources of air pollutants identified herein in accordance with all terms and conditions of this permit.

Facility Location:	Follansbee, Brooke County, West Virginia
Mailing Address:	100 Koppers Road, P. O. Box 665 Follansbee, WV 26037
Telephone Number:	(304) 527-0110; FAX Number: (304) 527-1813
Type of Business Entity:	Corporation
Facility Description:	The Follansbee Tar Plant produces chemical oils, refined tars, and various grades of coal tar pitch from crude coke oven tar.
SIC Codes:	2865 Primary; NA Secondary; NA Tertiary
UTM Coordinates:	533.46 km Easting • 4465.02 km Northing • Zone 17

Any person whose interest may be affected, including, but not necessarily limited to, the applicant and any person who participated in the public comment process, by a permit issued, modified or denied by the Secretary may appeal such action of the Secretary to the Air Quality Board pursuant to article one [§§ 22B-1-1 et seq.], Chapter 22B of the Code of West Virginia. West Virginia Code §22-5-14.

Issuance of this Title V Operating Permit does not supersede or invalidate any existing permits under 45CSR13, 14 or 19, although all applicable requirements from such permits governing the facility's operation and compliance have been incorporated into the Title V Operating Permit.

Table of Contents

1.0. Emission Units and Active R13, R14, and R19 Permits 8
1.1. Emission Units 8
1.2. Active R13, R14, and R19 Permits 24

2.0. General Conditions ..... 25~~3~~
2.1. Definitions ..... 25~~3~~
2.2. Acronyms ..... 25~~3~~
2.3. Permit Expiration and Renewal ..... 26~~4~~
2.4. Permit Actions ..... 26~~4~~
2.5. Reopening for Cause ..... 26~~4~~
2.6. Administrative Permit Amendments ..... 27~~5~~
2.7. Minor Permit Modifications ..... 27~~5~~
2.8. Significant Permit Modification ..... 27~~5~~
2.9. Emissions Trading ..... 27~~5~~
2.10. Off-Permit Changes ..... 27~~5~~
2.11. Operational Flexibility ..... 28~~6~~
2.12. Reasonably Anticipated Operating Scenarios ..... 29~~7~~
2.13. Duty to Comply ..... 29~~7~~
2.14. Inspection and Entry ..... 29~~7~~
2.15. Schedule of Compliance ..... 30~~8~~
2.16. Need to Halt or Reduce Activity not a Defense ..... 30~~8~~
2.17. Emergency ..... 30~~8~~
2.18. Federally-Enforceable Requirements ..... 31~~29~~
2.19. Duty to Provide Information ..... 31~~29~~
2.20. Duty to Supplement and Correct Information ..... 31~~29~~
2.21. Permit Shield ..... 32~~0~~
2.22. Credible Evidence ..... 32~~0~~
2.23. Severability ..... 32~~0~~
2.24. Property Rights ..... 32~~0~~
2.25. Acid Deposition Control ..... 33~~1~~

3.0. Facility-Wide Requirements ..... 34~~2~~
3.1. Limitations and Standards ..... 34~~2~~
3.2. Monitoring Requirements ..... 38~~5~~
3.3. Testing Requirements ..... 39~~6~~
3.4. Recordkeeping Requirements ..... 40~~37~~
3.5. Reporting Requirements ..... 41~~38~~
3.6. Compliance Plan ..... 43~~0~~
3.7. Permit Shield ..... 43~~0~~

4.0. Boilers Group 001 Requirements ..... 46~~2~~
4.1. Limitations and Standards ..... 46~~2~~
4.2. Monitoring Requirements ..... ~~4~~50
4.3. Testing Requirements ..... ~~4~~50
4.4. Recordkeeping Requirements ..... 50~~6~~
4.5. Reporting Requirements ..... 51~~46~~

5.0. Tar Distillation Unit Group 002 Requirements ..... 52~~47~~
5.1. Limitations and Standards ..... 52~~47~~
5.2. Monitoring Requirements ..... 54~~8~~
5.3. Testing Requirements ..... 54~~8~~
5.4. Recordkeeping Requirements ..... 54~~8~~
5.5. Reporting Requirements ..... 54~~9~~

6.0. Debenzolizer Unit Group 003 ~~and Acid Wash Group 004~~ Requirements ..... 55~~0~~
6.1. Limitations and Standards ..... 55~~0~~
6.2. Monitoring Requirements ..... 55~~0~~
6.3. Testing Requirements ..... 55~~0~~
6.4. Recordkeeping Requirements ..... 55~~0~~
6.5. Reporting Requirements ..... 55~~1~~

7.0. Naphthalene Distillation Unit Group 005 and Base Plant Group 006 Requirements ... 56~~1~~
7.1. Limitations and Standards ..... 56~~1~~
7.2. Monitoring Requirements ..... 59~~1~~
7.3. Testing Requirements ..... 59~~1~~
7.4. Recordkeeping Requirements ..... 59~~1~~
7.5. Reporting Requirements ..... 60~~54~~

8.0. Pencil Pitch Unit Group 008 Requirements ..... 61~~55~~
8.1. Limitations and Standards ..... 61~~55~~
8.2. Monitoring Requirements ..... 62~~56~~
8.3. Testing Requirements ..... 62~~56~~
8.4. Recordkeeping Requirements ..... 62~~56~~
8.5. Reporting Requirements ..... 62~~56~~

9.0. Product Loading Group 009 Requirements ..... 63~~57~~
9.1. Limitations and Standards ..... 63~~57~~
9.2. Monitoring Requirements ..... 64~~57~~
9.3. Testing Requirements ..... 64~~57~~
9.4. Recordkeeping Requirements ..... 64~~58~~
9.5. Reporting Requirements ..... 64~~58~~

10.0. Tanks Regulated Group 00AB 659
10.1. Limitations and Standards 659
10.2. Monitoring Requirements 670
10.3. Testing Requirements 670
10.4. Recordkeeping Requirements 670
10.5. Reporting Requirements 680

11.0 Effluent Plant Group 00C Requirements 691
11.1. Limitations and Standards 691
11.2. Monitoring Requirements 691
11.3. Testing Requirements 691
11.4. Recordkeeping Requirements 691
11.5. Reporting Requirements 691

12.0 Barge and Tankcar Heating Group 00D Requirements 7062
12.1. Limitations and Standards 7062
12.2. Monitoring Requirements 7062
12.3. Testing Requirements 7062
12.4. Recordkeeping Requirements 7062
12.5. Reporting Requirements 7062

13.0 Equipment Leaks Group 007 Requirements. 7163
13.1. Limitations and Standards 7163
13.2. Monitoring Requirements 7263
13.3. Testing Requirements 7263
13.4. Recordkeeping Requirements 7263
13.5. Reporting Requirements 7263

14.0 Source-Specific Requirements [Sections of 40 C.F.R. Part 61 Subpart J - Applicable to this Facility (Equipment in Benzene Service)] 7364
14.1. Limitations and Standards 7364
14.2. Monitoring Requirements 7465
14.3. Testing Requirements 7465
14.4. Recordkeeping Requirements 7465
14.5. Reporting Requirements 7465

15.0 Source-Specific Requirements [Sections of 40 C.F.R. Part 61 Subpart FF - Applicable to this Facility (Equipment in Benzene Service)] 7566
15.1. Limitations and Standards 7566
15.2. Monitoring Requirements 7667
15.3. Testing Requirements 7667
15.4. Recordkeeping Requirements 8071
15.5. Reporting Requirements 8172

16.0 Source-Specific Requirements [Sections of 40 C.F.R. Part 63 Subpart F - Applicable to this Facility (Equipment in Naphthalene Service)] ..... 82~~73~~
16.1. Limitations and Standards ..... 82~~73~~
16.2. Monitoring Requirements ..... 87~~77~~
16.3. Testing Requirements ..... 87~~78~~
16.4. Recordkeeping Requirements ..... 87~~78~~
16.5. Reporting Requirements ..... 88~~79~~

17.0 Source-Specific Requirements [Sections of 40 C.F.R. Part 63 Subpart G - Applicable to this Facility (Equipment in Naphthalene Service)] ..... 89~~80~~
17.1. Limitations and Standards ..... 89~~80~~
17.2. Monitoring Requirements ..... 92~~83~~
17.3. Testing Requirements ..... 96~~87~~
17.4. Recordkeeping Requirements ..... 97~~88~~
17.5. Reporting Requirements ..... 98~~89~~

18.0 Source-Specific Requirements [Sections of 40 C.F.R. Part 63 Subpart H – Applicable to this Facility (Equipment in Benzene Service and Naphthalene Service)] ..... 99~~90~~
18.1. Limitations and Standards ..... 99~~90~~
18.2. Monitoring Requirements ..... 115~~106~~
18.3. Testing Requirements ..... 117~~107~~
18.4. Recordkeeping Requirements ..... 118~~108~~
18.5. Reporting Requirements ..... 122~~112~~

19.0 Control Devices Source-Specific Requirements ~~[Sections of 40 C.F.R. Part 63 Subpart FFFF – Applicable to this Facility]~~ ..... 124~~114~~
19.1. Limitations and Standards ..... 124~~114~~
19.2. Monitoring Requirements ..... 126~~114~~
19.3. Testing Requirements ..... 127~~114~~
19.4. Recordkeeping Requirements ..... 127~~114~~
19.5. Reporting Requirements ..... 128~~114~~

20.0 Source-Specific Requirements [Reserved ~~Sections of 40 C.F.R. Part 63 Subpart DDDDD - Applicable to this Facility~~] ..... 129~~115~~
20.1. Limitations and Standards ..... 129~~115~~
20.2. Monitoring Requirements ..... 129~~115~~
20.3. Testing Requirements ..... 129~~115~~
20.4. Recordkeeping Requirements ..... 129~~115~~
20.5. Reporting Requirements ..... 129~~115~~

21.0. Creosote Processing Unit Group 00F Requirements [Sections of 40 C.F.R. Part 63 Subpart MMM] ..... 130~~116~~
21.1. Limitations and Standards ..... 130~~116~~
21.2. Monitoring Requirements ..... 135~~120~~
21.3. Testing Requirements ..... 135~~121~~
21.4. Recordkeeping Requirements ..... 136~~121~~
21.5. Reporting Requirements ..... 139~~124~~

APPENDIX A – Alternate Fuel Sampling Plan for 45CSR2 and 45CSR10 ..... 142~~127~~

1.0. Emission Units and Active R13, R14, and R19 Permits

1.1. Emission Units

Emission Unit ID	Emission Point ID	Emission Unit Description	Year Installed	Design Capacity	Control Device
Boilers Group 001					
992 ~~001-01~~	~~Stack~~ 992	Boiler #2 ~~Manufacturer: B&W~~	~~01/01/~~1941	50 MMBtu/hr ~~Liquid Fuel:~~ ~~3,200,000 gal/yr~~ ~~137,000 Btu/gal~~ ~~% Sulfur: 0.25~~	None
993 ~~001-02~~	~~Stack~~ 993	Boiler #3 ~~Manufacturer: Zurn Industries~~	~~01/01/~~1988	75 MMBtu/hr ~~Natural Gas:~~ ~~657 MMcf/yr~~ ~~Liquid Fuel:~~ ~~2,700,000 gal/yr~~ ~~137,000 Btu/gal~~ ~~% Sulfur: 0.25~~	None
995 ~~001-04~~	~~Stack~~ 995	Boiler #5 ~~Manufacturer: Keeler~~ ~~In 1988 Modified from burning oil to burning only natural gas~~	~~01/01/~~1977 ~~01/01/1988~~	132 MMBtu/hr ~~Natural Gas:~~ ~~1,156 MMcf/yr~~	None
Tar Distillation, #1 Column as Continuous Operation Group 002					
881 ~~002-01~~	~~Stack~~ 881	Tube Heater #1 ~~Manufacturer: Born Engineering~~		10 MMBtu/hr	None
882 ~~002-02~~	~~Stack~~ 882	Tube Heater #2 ~~Manufacturer: Born Engineering~~		10 MMBtu/hr	None
884 ~~002-03~~	~~Stack~~ 884	Tube Heater #4 ~~Manufacturer: Born Engineering~~		10 MMBtu/hr	None
VT01 ~~002-06~~	~~Stack~~ 774a or 778~~31/~~	#1 Column ~~(Fractionator) (Vent VT01)~~ ~~Consist of: Tar Still Single Bypass Distillation Unit Run Continuously or Batch Distillation Operation Product: Chemical Oils, Coal Tar Distillates, Pitches, Refined Tars To Tube Heater #31 via Seal Oil Tank~~		85 ~~75,000,000~~ Gallons per minute of ~~Coal~~ Tar	774a or 778~~31~~
VT02 ~~002-09~~	~~Stacks 831/774~~ 779	#1 Pitch Flash Column ~~(Vent VTPF~~) ~~Products: Heavy Distillate Oil Hard Carbon Pitch~~			None ~~831 or 774~~

Emission Unit ID	Emission Point ID	Emission Unit Description	Year Installed	Design Capacity	Control Device
VT03 ~~002-07~~	~~Stack~~ 774a or 778~~31/~~	#2 Column ~~/ #4 Column (Vent VT24)~~ ~~Consist of: Tar Stills Multiple Pass Distillation Unit Run Continuously or Batch Distillation Operation Product: Chemical Oils, Coal Tar Distillates, Pitches, Refined Tars To Tube Heater #31 via Seal Oil Tank~~		85 ~~75,000,000~~ Gallons per minute of ~~Coal~~ Tar	774a or 778~~31~~
VT04	774a or 778	#4 Column		100 Gallons of Tar per minute	Stacks 774a or 778
VT05	774a or 778	#4 Pitch Flash Column			Stacks 774a or 778
VT63 ~~002-08~~	~~Stack~~ 774a or 778~~31/~~	Decanter #63 ~~Vent (VTDC)~~ ~~Used to Separate Oil and Water~~		12,900 Gallons	774a or 778~~31~~
VT64 ~~002-08~~	~~Stack~~ 774a or 778~~31/~~	Decanter #64 ~~Vent (VTDC)~~ ~~Used to Separate Oil and Water~~		12,900 Gallons	774a or 778~~31~~
VT65 ~~002-08~~	~~Stack~~ 774a or 778~~31/~~	Decanter #65 ~~Vent (VTDC)~~ ~~Used to Separate Oil and Water~~		12,900 Gallons	774a or 778~~31~~
VTMP ~~002-00A~~	~~Stack~~ 774a or 778~~31/~~	Melt Pot Tank ~~(VTMP)~~ ~~Max Temp: 203 °F~~	Future ~~2005~~	15,000 gallon ~~Liquid Throughput: 1,000,000 gal/yr Solid Throughput: 5,000 tons/yr~~	774a or 778~~31~~
Scrubber A	774a or 778	Scrubber A (Oil)		Maximum Flow Rate: 250 gal/min	774a or 778
Debenzolizer Unit Group 003					
VTDB ~~003-01~~	~~Stack~~ 774a or 778~~31/~~	Debenzolizer Unit ~~(VTDB) Vent~~ ~~Consist of: Distillation Column Runs Continuously Product: Debenzolizer Overheads and Benzene Free Chemical Oil To Tube Heater #31 via Seal Oil Tanks~~	2008 ~~12/01/1998 04/01/1999~~	100 ~~50,000,000~~ Gallons of RCO per minute	~~To Tank 89~~ ~~Then to~~ 774a or 778~~31~~
~~Acid Washers Group 004~~					
~~004-01~~	~~No emission points to atmosphere.~~	~~Acid Washer~~ ~~Benzene free chemical oil feed into bottom of column and caustic fed at the top of column. Only fugitive leaks are generated and are included as part of Group 007.~~			

Emission Unit ID	Emission Point ID	Emission Unit Description	Year Installed	Design Capacity	Control Device
Naphthalene Distillation Group 005					
VT32 ~~005-04~~	~~Stack~~ 774a or 778~~31/~~	Solvent Column #32 ~~Vent (VT32~~) ~~#32 Column~~		52,560,000 ~~19,280,000~~ Gallons of Benzene Free Oil ~~Naphthalene~~ per year	774a or 778~~31~~
VT31 ~~005-04~~	None ~~vents (Tank 3N) No vent to atmosphere unless emergency release where it~~	Naphthalene Column #31 ~~#31 Column Vent is under negative pressure. Thus negligible emissions.~~		22,897,480 ~~19,280,000~~ Gallons of Naphthalene per year	Vents to (Tank 3N)
831 ~~005-05~~	~~Stack~~ 831~~/~~	#31 Tube Heater ~~Manufacturer: Born Engineering~~	~~9/30/1994~~	27 MMBtu/hr	None
~~005-06~~	~~Stack 774~~	~~Flare (Back-up Control Device To #31 Tube Heater) Manufacturer: Zeco, Inc.~~	~~8/19/1994~~	~~13.76 MMBtu/hr~~	~~None~~
~~Scrubber A~~	~~Stacks 831/774~~	~~Scrubber A (Oil) Manufacturer: Koppers~~		~~Maximum Flow Rate: 250 gal/min~~	~~831 or 774~~
~~Scrubber C~~	~~Stacks 831/774~~	~~Scrubber C (Oil) Vent (VT32) Manufacturer: Koppers~~		~~Maximum Flow Rate: 250 gal/min~~	~~831 or 774~~
~~Scrubber F~~	~~Stacks 831/774~~	~~Scrubber F Manufacturer: Koppers~~			~~831 or 774~~
Base Plant Group 006					
BW02 ~~006-01~~	BW02 ~~Fugitive~~	#2 Washer ~~– Solvent from #31 Column are washed with 25% Sulfuric Acid to extract the tar base.~~		12,000 gallons ~~Base Washer~~	None
BW03 ~~006-02~~	BW03 ~~Fugitive~~	#3 Washer ~~– Solvent from #31 Column are washed with 25% Sulfuric Acid to extract the tar base.~~		12,000 gallons ~~Base Washer~~	None
Equipment Leak Group 007					
007	Fugitive	Entire Facility not covered by a LDAR Plan			None
Pencil Pitch Area Group 008					
008-01	~~Stack~~ 773	Hot Oil Heater ~~Fuel: Natural Gas~~		5 MMBtu/hr	None
008-02	~~Stack~~ 771	Pencil Pitch Dryer (770) ~~Fuel: Natural Gas~~		6 MMBtu/hr	Pencil Pitch Baghouse
~~008-03~~	~~Stack 771~~	~~Pencil Pitch Baghouse Manufacturer: Wheelabrator~~			~~None~~

Emission Unit ID	Emission Point ID	Emission Unit Description	Year Installed	Design Capacity	Control Device
Product Loading Group 009					
R-1	Vehicle	Loading Rack ~~and Barges when Loading CCOT~~ ~~Location: River Dock~~ ~~Spout Number: 1~~ ~~Material Transferred: Various~~			None
R-2	Vehicle	Loading Rack ~~Location: River Dock~~ ~~Spout Number: 2~~ ~~Material Transferred: Various~~			None
LR 1-1	Vehicle	Loading Rack ~~Location: Railroad Track 1~~ ~~Spout on Track: 1~~ ~~Material Transferred: Various~~			None
LR 1-2	Vehicle	Loading Rack ~~Location: Railroad Track 1~~ ~~Spout on Track: 2~~ ~~Material Transferred: Various~~			None
LR 1-3	Vehicle	Loading Rack ~~Location: Railroad Track 1~~ ~~Spout on Track: 3~~ ~~Material Transferred: Various~~			None
LR 1-4	Vehicle	Loading Rack ~~Location: Railroad Track 1~~ ~~Spout on Track: 4~~ ~~Material Transferred: Various~~			None
LR 1-5	Vehicle	Loading Rack ~~Location: Railroad Track 1~~ ~~Spout on Track: 5~~ ~~Material Transferred: Various~~			None
LR 2-1	Vehicle	Loading Rack ~~Location: Railroad Track 2~~ ~~Spout on Track: 1~~ ~~Material Transferred: Various~~			None
LR 2-2	~~Stacks~~ 774a or 778~~31/~~	Loading Rack ~~Location: Railroad Track 2~~ ~~Spout on Track: 2~~ ~~Material Transferred: Naphthalene, Various~~			774a or 778~~31~~ ~~Srubber A~~
LR 3-1	Vehicle	Loading Rack ~~Location: Railroad Track 3~~ ~~Spout on Track: 1~~ ~~Material Transferred: Various~~			None
LR 3-2	774a or 778 ~~Stack 776~~	Loading Rack ~~Location: Railroad Track 3~~ ~~Spout on Track: 2~~ ~~Material Transferred: Pitch and Refined Tar and PSB, Various~~			774a or 778 ~~776~~ ~~(Scrubber D)~~

Emission Unit ID	Emission Point ID	Emission Unit Description	Year Installed	Design Capacity	Control Device
LR 4-1	774a or 778 ~~Vehicle~~	Loading Rack ~~Location: Railroad Track 4~~ ~~Spout on Track: 1~~ ~~Material Transferred: Various~~			774a or 778 ~~None~~
LR 4-2	774a or 778 ~~Vehicle~~	Loading Rack ~~Location: Railroad Track 4~~ ~~Spout on Track: 2~~ ~~Material Transferred: Various~~			774a or 778 ~~None~~
LR 4-3	Vehicle	Loading Rack ~~Location: Railroad Track 4~~ ~~Spout on Track: 3~~ ~~Material Transferred: Various~~			None
LR 4-4	Vehicle	Loading Rack ~~Location: Railroad Track 4~~ ~~Spout on Track: 4~~ ~~Material Transferred: Various~~			None
LR 4-5	~~Stack~~ 777	Loading Rack ~~Location: Railroad Track 4~~ ~~Spout on Track: 5~~ ~~Material Transferred: Pitch, Refined Tar, PSB, Various~~			777 (Scrubber E)
LR 4-6	Vehicle	Loading Rack ~~Location: Railroad Track 4~~ ~~Spout on Track: 6~~ ~~Material Transferred: Various~~			None
LR 5-1	Vehicle	Loading Rack ~~Location: Truck Spout~~ ~~Spout No.: 1~~ ~~Material Transferred: Various~~			None
LR 5-2	774a or 778 ~~Vehicle~~	Loading Rack ~~Location: Truck Spout~~ ~~Spout No.: 2~~ ~~Material Transferred: Various~~			774a or 778 ~~None~~
LR 5-3	774a or 778 ~~Stack 776~~	Loading Rack ~~Location: Truck Spout~~ ~~Spout No.: 3~~ ~~Material Transferred: Pitch and Refined Tar and PSB, Various~~			774a or 778 ~~776~~ ~~(Scrubber D)~~
LR 5-4	~~Stack~~ 777	Loading Rack ~~Location: Truck Spout~~ ~~Spout No.: 4~~ ~~Material Transferred: Pitch, Refined Tar, PSB, Various~~			777 (Scrubber E)
LR 5-5	~~Stack~~ 777	Loading Rack ~~Location: Truck Spout~~ ~~Spout No.: 5~~ ~~Material Transferred: Pitch, Refined Tar, PSB, Various~~			777 (Scrubber E)

Emission Unit ID	Emission Point ID	Emission Unit Description	Year Installed	Design Capacity	Control Device
LR 5-6	Vehicle	Loading Rack ~~Location: Truck Spout~~ ~~Spout No.: 6~~ ~~Material Transferred: Various~~			None
LR 5-7	Vehicle	Loading Rack ~~Location: Truck Spout~~ ~~Spout No.: 7~~ ~~Material Transferred: Various~~			None
LR 5-8	Vehicle	Loading Rack ~~Location: Truck Spout~~ ~~Spout No.: 8~~ ~~Material Transferred: Various~~			None
LR 5-9	Vehicle	Loading Rack			None
LR 5-10	Vehicle	Loading Rack			None
~~776~~	~~Stack 776~~	~~Scrubber D (Oil)~~ ~~Manufacturer: Koppers~~		~~Maximum Flow Rate: 250 gal/min~~	~~None~~
~~777~~	~~Stack 777~~	~~Scrubber E (Oil)~~ ~~Manufacturer: Koppers~~		~~Maximum Flow Rate: 250 gal/min~~	~~None~~
Tanks ~~Not Regulated~~ Group 00A					
1M	~~Vent Tank~~ 1M	Tank 1M ~~Stores: Crude Methyl Naphthalene/Bottom Column Oil, Various~~ ~~Roof Type: Fixed~~	Pre – 1970 ~~1916~~	25,910 Gallons	None
2N	774a or 778 ~~Vent Tank 2N~~	Tank 2N ~~Stores: NSR, Various~~ ~~Roof Type: Fixed~~	Pre – 1970 ~~1945~~	25,910 Gallons	774a or 778 ~~None~~
3N	774a or 778~~31/~~	Tank 3N ~~Stores: Naphthalene, Various~~ ~~Roof Type: Fixed~~	Pre – 1970 ~~1945~~	25,564 gallons	774a or 778~~31~~ ~~Scrubber C to~~
4N	~~Vent Tank~~ 4N	Tank 4N ~~Stores: Empty, Various~~ ~~Roof Type: Fixed~~	Pre – 1970 ~~1945~~	25,910 Gallons	None
5N	~~Vent Tank~~ 5N	Tank 5N ~~Stores: Empty, Various~~ ~~Roof Type: Fixed~~	Pre – 1970 ~~1945~~	25,910 Gallons	None
6R	~~Vent Tank~~ 6R	Tank 6R ~~Stores: NSR, , Various~~ ~~Roof Type: Fixed~~	Pre – 1970 ~~1945~~	25,910 Gallons	None
1 ~~00B-2N~~	~~Vent Tank~~ 1	Tank 1 ~~Stores: Carbon Black Oil, Various~~ ~~Roof Type: Fixed~~	1945	440,638~~40~~ Gallons ~~36,000 Gallons/hr~~	None
2	~~Vent Tank~~ 2	Tank 2 ~~Stores: Fuel, Tar, Various~~ ~~Roof Type: Fixed~~	1945	440,638 Gallons	None

Emission Unit ID	Emission Point ID	Emission Unit Description	Year Installed	Design Capacity	Control Device
3 ~~00B-20~~	~~Vent Tank~~ 3	Tank 3 ~~Stores: Carbon Black Oil, Various~~ ~~Roof Type: Fixed~~	1926	514,077 Gallons ~~60,000 Gallons/hr~~	None
4 ~~00B-2E~~	4 ~~Stack 775~~	Tank 4 ~~Stores: Crude Coal Tar, Various~~ ~~Roof Type: Fixed~~	1945	514,077 Gallons ~~60,000 Gallons/hr~~	None ~~775~~ ~~(Scrubber B)~~
5 ~~00B-2L~~	~~Vent Tank~~ 5	Tank 5 ~~Stores: Cap Water/ CCOT, Various~~ ~~Roof Type: Fixed~~	1945	518, 077~~484~~ Gallons ~~24,000 Gallons/hr~~	None
6 ~~00B-20~~	774a or 778~~31/~~	Tank 6 ~~Stores: Crude Coal Tar CCOT, Various~~ ~~Roof Type: Fixed~~	1951	518,484 Gallons ~~60,000 Gallons/hr~~	774a or 778~~31~~ ~~Scrubber A to~~
7 ~~00B-1Y~~	774a or 778~~31/~~	Tank 7 ~~Stores: Acid Chemical Free Oil-AFCO, Various~~ ~~Roof Type: Fixed~~	1951	528,765 Gallons ~~6,600 Gallons/hr~~	774a or 778~~31~~ ~~Scrubber F to~~
8	~~Vent~~ 8	Tank 8 ~~Stores: Slop, Various~~ ~~Roof Type: Fixed~~	1951	528,765 Gallons	None
9 ~~00B-1Z~~	774a or 778~~31/~~	Tank 9 ~~Stores: Acid Chemical Free Oil - AFCO~~ ~~Roof Type: Fixed~~	1994	514,077 Gallons ~~6,600 Gallons/hr~~	774a or 778~~31~~ ~~Scrubber F to~~
10 ~~00B-2F~~	774a or 778~~31/~~	Tank 10 ~~Stores: Middle Oil, Various~~ ~~Roof Type: Fixed~~	1965	99,525 Gallons ~~11,100 Gallons/hr~~	774a & or 778~~31~~
11 ~~00B-2D~~	774a or 778~~31/~~	Tank 11 ~~Stores: Liquid Fuel, Various~~ ~~Roof Type: Fixed~~	1965 ~~1993~~	99,525 Gallons ~~18,000 Gallons/hr~~ ~~Annual Benzene through put: 980,000 Gallons per year~~	774a &or 778~~31~~
13	774a or 778 ~~Stack 776~~	Tank 13 ~~Stores: Refined Tar / Pavement Sealer Base, Various~~ ~~Roof Type: Fixed~~	1948	67,682 Gallons	774a or 778 ~~776~~ ~~(Scrubber D)~~
14	774a or 778 ~~Stack 776~~	Tank 14 ~~Stores: Refined Tar / Pavement Sealer Base, Various~~ ~~Roof Type: Fixed~~	1948	56,853 Gallons	774a or 778 ~~776~~ ~~(Scrubber D)~~
15	~~Vent Tank~~ 15	Tank 15 ~~Stores: Empty, Various~~ ~~Roof Type: Fixed~~	2003 ~~1956~~	60,162 Gallons	None
16	~~Vent Tank~~ 16	Tank 16 ~~Stores: Empty, Various~~ ~~Roof Type: Fixed~~	1956	60,162 Gallons	None
17	774a or 778 ~~Vent 17~~	Tank 17 ~~Stores: Heavy Oil, Various~~ ~~Roof Type: Fixed~~	1957	60,162 Gallons	774a or 778 ~~None~~

Emission Unit ID	Emission Point ID	Emission Unit Description	Year Installed	Design Capacity	Control Device
18	~~Vent Tank~~ 18	Tank 18 ~~Stores: Empty~~ ~~Roof Type: Fixed, Various~~	1957	60,162 Gallons	None
20	~~Vent Tank~~ 20	Tank 20 ~~Stores: Empty~~ ~~Roof Type: Fixed, Various~~	1951	37,902 Gallons	None
21	~~Vent Tank~~ 21	Tank 21 ~~Stores: Sodium Cresylate, Various~~ ~~Roof Type: Fixed~~	1936	94,003 Gallons	None
23 ~~00B-32~~	~~Vent Tank~~ 23	Tank 23 ~~Stores: Low Boiling Tar Bases, Various~~ ~~Roof Type: Fixed~~	1936	94,003 Gallons ~~1,200 Gallons/hr~~	None
24 ~~00B-2T~~	~~Vent Tank~~ 24	Tank 24 ~~Stores: Unwashed Solvent, Various~~ ~~Roof Type: Fixed~~	1959	58,752 Gallons ~~720 Gallons/hr~~	None
25 ~~00B-2U~~	~~Vent Tank~~ 25	Tank 25 ~~Stores: Unwashed Solvent , Various~~ ~~Roof Type: Fixed~~	1959	58,752 Gallons ~~720 Gallons/hr~~	None
28	~~Vent Tank~~ 28	Tank 28 ~~Stores: Plant Water, Various~~ ~~Roof Type: Fixed~~	1941	58,752 Gallons	None
30 ~~00B-21~~	774a or 778~~31/~~	Tank 30 ~~Stores:-Crude Coal Tar-CCOT, Various~~ ~~Roof Type: Fixed~~	1965	210,566 Gallons ~~60,000 Gallons/hr~~	774a or 778~~31~~
33 ~~00B-2V~~	~~Vent Tank~~ 33	Tank 33 ~~Stores: Unwashed Solvent, Various~~ ~~Roof Type: Fixed~~	1940	15,546 Gallons ~~720 Gallons/hr~~	None
40 ~~00B-22~~	774a or 778~~31/~~	Tank 40 ~~Stores:-Crude Coal Tar-CCOT, Various~~ ~~Roof Type: Fixed~~	1926	251,898 Gallons ~~60,000 Gallons/hr~~	774a or 778~~31~~
41 ~~00B-23~~	774a or 778~~31/~~	Tank 41 ~~Stores:-Crude Coal Tar-CCOT, Various~~ ~~Roof Type: Fixed~~	1926	251,898 Gallons ~~60,000 Gallons/hr~~	774a or 778~~31~~
42	~~Vent Tank~~ 42	Tank 42 ~~Stores: Sodium Cresylate, Various~~ ~~Roof Type: Fixed~~	1937	~~1,~~251,898 Gallons	None
48 ~~00B-24~~	774a or 778~~31/~~	Tank 48 ~~Stores:-Crude Coal Tar-CCOT, Various~~ ~~Roof Type: Fixed~~	1995	514,077 Gallons ~~60,000 Gallons/hr~~	774a or 778~~31~~ ~~Scrubber A to~~
49 ~~00B-25~~	774a or 778~~31/~~	Tank 49 ~~Stores: Crude Coal Tar - CCOT, Various~~ ~~Roof Type: Fixed~~	1995	514,077 Gallons ~~60,000 Gallons/hr~~	774a or 778~~31~~ ~~Scrubber A to~~
50	774a or 778 ~~Vent Tank 50~~	Tank 50 ~~Stores: Naphthalene Still Residue, Various~~ ~~Roof Type: Fixed~~	2007 ~~1928~~	1,065,991 ~~1,078,117~~ Gallons	774a or 778 ~~None~~
51 ~~00B-2J~~	~~Vent Tank~~ 51	Tank 51 ~~Stores: Cap Water/ CCOT, Various~~ ~~Roof Type: Fixed~~	1928	1,065,991 ~~1,075,128~~ Gallons ~~24,000 Gallons/hr~~	None ~~Submerged Fill~~

Emission Unit ID	Emission Point ID	Emission Unit Description	Year Installed	Design Capacity	Control Device
52 ~~00B-2K~~	~~Vent Tank~~ 52	Tank 52 ~~Stores: Cap Water/ CCOT, Various~~ ~~Roof Type: Fixed~~	1928~~9~~	1,065,991 ~~1,062,945~~ Gallons ~~24,000 Gallons/hr~~	None ~~Submerged Fill~~
53	~~Vent Tank~~ 53	Tank 53 ~~Stores: River Water, Various~~ ~~Roof Type: Fixed~~	1948	1,062,945 Gallons	None
54	~~Vent Tank~~ 54	Tank 54 ~~Stores: Slop/Distillate, Various~~ ~~Roof Type: Fixed~~	1963	514,077 Gallons	None
55 ~~00B-28~~	774a or 778~~31/~~	Tank 55 ~~Stores: Refined Chemical Oil, Various~~ ~~Roof Type: Fixed~~	1969	913,710 Gallons ~~36,000 Gallons/hr~~	774a or 778~~31~~ ~~Scrubber A to~~
56 ~~00B-2A~~	774a or 778~~31/~~	Tank 56 ~~Stores: Refined Chemical Oil, Various~~ ~~Roof Type: Fixed~~	1969	913,710 Gallons ~~36,000 Gallons/hr~~	774a or 778~~31~~ ~~Scrubber A to~~
57	~~Vent Tank~~ 57	Tank 57 **Stores:** ~~Sodium Cresylate, Various~~ ~~Roof Type: Fixed~~	1969	440,638~~9~~ Gallons	None
58 ~~00B-26~~	774a or 778~~31/~~	Tank 58 ~~Stores: Crude Coal Tar/CCOT, Various~~ ~~Roof Type: Fixed~~	1973	435,280 Gallons ~~60,000 Gallons/hr~~	774a or 778~~31~~ ~~Scrubber A to~~
59 ~~00B-31~~	~~Vent Tank~~ 59	Tank 59 ~~Stores: Low Boiling Tar Bases , Various~~ ~~Roof Type: Fixed~~	1975	514,077 Gallons ~~1,200 Gallons/hr~~	None
70	~~Vent Tank~~ 70	Tank 70 ~~Stores: Crude Methyl Naphthalene/Bottom Column Oil, Various~~ ~~Roof Type: Fixed~~	1956	9,649 Gallons	None
71	~~Vent Tank~~ 71	Tank 71 ~~Stores: Refined Tar/Pavement Sealer Base, Various~~ ~~Roof Type: Fixed~~	1956	9,649 Gallons	None
72	~~Vent Tank~~ 72	Tank 72 ~~Stores: Refined Tar/Pavement Sealer Base, Various~~ ~~Roof Type: Fixed~~	1956	9,649 Gallons	None
73	~~Vent Tank~~ 73	Tank 73 ~~Stores: Crude Methyl Naphthalene/Bottom Column Oil, Various~~ ~~Roof Type: Fixed~~	1956	9,649 Gallons	None
82	774a or 778 ~~Vent Tank 82~~	Tank 82 ~~Stores: Naphthalene Still Residue, Various~~ ~~Roof Type: Fixed~~	1966	148,116 Gallons	774a or 778 ~~None~~

Emission Unit ID	Emission Point ID	Emission Unit Description	Year Installed	Design Capacity	Control Device
83	774a or 778~~31/~~	Tank 83 ~~Stores: Naphthalene, Various~~ ~~Roof Type: Fixed~~	1966 ~~1997~~	105,797 Gallons	774a or 778~~31~~ ~~Scrubber C to~~
84 ~~002-2G~~	~~Vent Tank~~ 84	Tank 84 ~~Stores: Acid Chemical Free Oil / Cresylate , Various~~ ~~Roof Type: Fixed~~	1937	105,797 Gallons ~~6,600 Gallons/hr~~	None
85 ~~00B-2H~~	~~Vent Tank~~ 85	Tank 85 ~~Stores: Acid Chemical Free Oil / Cresylate, Various~~ ~~Roof Type: Fixed~~	1937	105,797 Gallons ~~6,600 Gallons/hr~~	None
87	~~Vent Tank~~ 87	Tank 87 ~~Stores: Sodium Carbonate, Various~~ ~~Roof Type: Fixed~~	1947	105,444 Gallons	None
88	~~Vent Tank~~ 88	Tank 88 ~~Stores: Naphthalene Still Residue, Various~~ ~~Roof Type: Fixed~~	1937	105,797 Gallons	None
89 ~~00B-27~~	774a or 778~~31/~~	Tank 89 ~~Stores: Refined Chemical Oil, Various~~ ~~Roof Type: Fixed~~	1941	105,797 Gallons ~~36,000 Gallons/hr~~	774a or 778~~31~~ ~~Scrubber A to~~
100	~~Vent Tank~~ 100	Tank 100 ~~Stores: Refined Tar/Pave Base Sealer, Various~~ ~~Roof Type: Fixed~~	1987 ~~1951~~	17,872 Gallons	None
126 ~~00F-01~~	774a or 778~~31/~~	Tank 126 ~~Stores: Creosote, Various~~ ~~Roof Type: Fixed~~	1970 ~~1981~~	60,162~~910~~ Gallons ~~2,000 Gallons/hr~~	774a or 778~~31~~ ~~Scrubber A to~~
127 ~~00F-01~~	774a or 778~~31/~~	Tank 127 ~~Stores: Creosote, Various~~ ~~Roof Type: Fixed~~	1970	60, 162~~158~~ Gallons ~~2,000 Gallons/hr~~	774a or 778~~31~~ ~~Scrubber A to~~
151	~~Vent Tank~~ 151	Tank 151 ~~Stores: WWTP Sludge (Biological) , Various~~ ~~Roof Type: Fixed~~	1965	110,159 Gallons	None
152	~~Vent Tank~~ 152	Tank 152 ~~Stores: WWTP Sludge (Biological) , Various~~ ~~Roof Type: Fixed~~	1965	158,630 Gallons	None
153	~~Vent Tank~~ 153	Tank 153 ~~Stores: Caustic Soda, Various~~ ~~Roof Type: Fixed~~	1977	11,750 Gallons	None
251	774a or 778 ~~Vent Tank 251~~	Tank 251 ~~Stores: Refined Tar/Pave Base Sealer, Various~~ ~~Roof Type: Fixed~~	1957	19,976 Gallons	774a or 778 ~~None~~

Emission Unit ID	Emission Point ID	Emission Unit Description	Year Installed	Design Capacity	Control Device
252	774a or 778 ~~Vent Tank 252~~	Tank 252 ~~Stores: Refined Tar/Pave Base Sealer, Various~~ ~~Roof Type: Fixed~~	1957	19,976 Gallons	774a or 778 ~~None~~
253	774a or 778 ~~Vent Tank 253~~	Tank 253 ~~Stores: Refined Tar/Pave Base Sealer, Various~~ ~~Roof Type: Fixed~~	1957	19,976 Gallons	774a or 778 ~~None~~
254	774a or 778 ~~Vent Tank 254~~	Tank 254 ~~Stores: Crude Methyl Naphthalene/Bottom Column Oil, Various~~ ~~Roof Type: Fixed~~	1957	19,976 Gallons	774a or 778 ~~None~~
300	~~Vent Tank~~ 300	Tank 300 ~~Stores: Empty, Various~~ ~~Roof Type: Fixed~~	1951	5,339 Gallons	None
301	~~Vent Tank~~ 301	Tank 301 ~~Stores: Empty, Various~~ ~~Roof Type: Fixed~~	1944	5,26~~3~~9 Gallons	None
302	~~Vent Tank~~ 302	Tank 302 ~~Stores: Empty, Various~~ ~~Roof Type: Fixed~~	1940	5,239 Gallons	None
303 ~~00B-33~~	~~Vent Tank~~ 303	Tank 303 ~~Stores: Priming&Refractory Oil, Various~~ ~~Roof Type: Fixed~~	1944	5,269 Gallons ~~6,000 Gallons/hr~~	None
304 ~~00B-34~~	~~Vent Tank~~ 304	Tank 304 ~~Stores: Priming&Refractory Oil, Various~~ ~~Roof Type: Fixed~~	1944	5,269 Gallons ~~6,000 Gallons/hr~~	None
305 ~~00B-35~~	~~Vent Tank~~ 305	Tank 305 ~~Stores: Priming&Refractory Oil, Various~~ ~~Roof Type: Fixed~~	1944	5,269 Gallons ~~6,000 Gallons/hr~~	None
308	~~Vent Tank~~ 308	Tank 308 ~~Stores: Sulfuric Acid, Various~~ ~~Roof Type: Fixed~~	1965	13,891 Gallons	None
323	~~Vent Tank~~ 323	Tank 323 ~~Stores: Caustic Soda, Various~~ ~~Roof Type: Fixed~~	1940	9,988 Gallons	None
337	~~Vent Tank~~ 337	Tank 337 ~~Stores: Caustic Soda, Various~~ ~~Roof Type: Fixed~~	1967	19,976 ~~30,000~~ Gallons	None
351	~~Vent Tank~~ 351	Tank 351 ~~Stores: Empty, Various~~ Roof ~~Type: Fixed~~	1945	16,193 Gallons	None
352	~~Vent Tank~~ 352	Tank 352 ~~Stores: Empty, Various~~ ~~Roof Type: Fixed~~	1945	16,143 Gallons	None

Emission Unit ID	Emission Point ID	Emission Unit Description	Year Installed	Design Capacity	Control Device
360 ~~00B-2Y~~	~~Vent Tank~~ 360	Tank 360 ~~Stores: Low-Boiling Tar Bases, Various~~ **Roof Type:** Fixed	1945	25,910 Gallons ~~1,200 Gallons/hr~~	None
361 ~~00b-2Z~~	~~Vent Tank~~ 361	Tank 361 ~~Stores: Low-Boiling Tar Bases, Various~~ ~~Roof Type: Fixed~~	1945	25,910 Gallons ~~1,200 Gallons/hr~~	None
362 ~~00B-2W~~	~~Vent Tank~~ 362	Tank 362 ~~Stores: Unwashed Solvent, Various~~ ~~Roof Type: Fixed~~	1945	25,910 Gallons ~~6,400 Gallons/hr~~	None
363 ~~00B-30~~	~~Vent Tank~~ 363	Tank 363 ~~Stores: Low-Boiling Tar Bases, Various~~ ~~Roof Type: Fixed~~	1945	25,910 Gallons ~~1,200 Gallons/hr~~	None
364 ~~00B-2X~~	~~Vent Tank~~ 364	Tank 364 ~~Stores: Debenzolizer Solvent, Various~~ ~~Roof Type: Fixed~~	1945	25,910 ~~15,158~~ Gallons ~~6,400 Gallons/hr~~	None
377	~~Vent Tank~~ 377	Tank 377 ~~Stores: Empty, Various~~ ~~Roof Type: Fixed~~	1955	13,452 Gallons	None
378	~~Vent Tank~~ 378	Tank 378 ~~Stores: Empty, Various~~ ~~Roof Type: Fixed~~	1955	13,452 Gallons	None
381	~~Vent Tank~~ 381	Tank 381 ~~Stores: Slop, Various~~ ~~Roof Type: Fixed~~	1942	105,797 Gallons	None
382 ~~00B-2I~~	774a or 778 ~~Vent Tank 382~~	Tank 382 ~~Stores: Acid Free Chemical Oil/Cresylate, Various~~ ~~Roof Type: Fixed~~	1952	251,898~~618~~ Gallons ~~24,000 Gallons/hr~~	774a or 778 ~~None~~
383 ~~00B-2M~~	~~Vent Tank~~ 383	Tank 383 ~~Stores: Crystal Free Neutral Oil, Various~~ ~~Roof Type: Fixed~~	1959	21,151 Gallons ~~24,000 Gallons/hr~~	None
406	774a or 778 ~~Stack 776~~	Tank 406 ~~Stores: Refined Tar / Pavement Sealer Base, Various~~ ~~Roof Type: Fixed~~	1951	22,843 Gallons	774a or 778 ~~776 (Scrubber D)~~
407	774a or 778 ~~Stack 776~~	Tank 407 ~~Stores: Refined Tar / Pavement Sealer Base, Various~~ ~~Roof Type: Fixed~~	1951	22,843 Gallons	774a or 778 ~~776 (Scrubber D)~~
408	~~Vent Tank~~ 408	Tank 408 ~~Stores: Crude Methyl Naphthalene/Bottom Column Oil, Various~~ ~~Roof Type: Fixed~~	1951	22,843 Gallons	None
501 ~~00B-38~~	~~Vent Tank~~ 501	Tank 501 ~~Stores: Wastewater, Various~~ ~~Roof Type: Fixed~~	1972	499,683 Gallons ~~7,200 Gallons/hr~~	None

Emission Unit ID	Emission Point ID	Emission Unit Description	Year Installed	Design Capacity	Control Device
502 ~~00B-39~~	~~Vent Tank~~ 502	Tank 502 ~~Stores: Wastewater, Various~~ ~~Roof Type: Fixed~~	1972	499,683 Gallons ~~7,200 Gallons/hr~~	None
553	~~Vent Tank~~ 553	Tank 553 ~~Stores: Empty and Clean, Various~~ ~~Roof Type: Fixed~~	Pre -1970 ~~1953~~	21,327 Gallons	None
560	~~Vent Tank~~ 560	Tank 560 ~~Stores: DAF Sludge, Oil/Solid Mixture, Various~~ ~~Roof Type: Fixed~~	1953	25,592 Gallons	None
561	~~Vent Tank~~ 561	Tank 561 ~~Stores: DAF Sludge, Oil/Solid Mixture, Various~~ ~~Roof Type: Fixed~~	1953	25,592 Gallons	None
580 ~~00B-3A~~	~~Vent Tank~~ 580	Tank 580 ~~Stores: Wastewater, Various~~ ~~Roof Type: Fixed~~	1953	110,159 Gallons ~~18,016 Gallons/hr~~	None
623	774a or 778~~31/~~	Tank 623 ~~Stores: Naphthalene, Various~~ ~~Roof Type: Fixed~~	1965	456,254 Gallons	774a or 778~~31~~ ~~Scrubber C to~~
801	~~Stack~~ 777	Tank 801 ~~Stores: Pitch, Various~~ ~~Roof Type: Fixed~~	1963	63,546 Gallons	777 (Scrubber E)
802	~~Stack~~ 777	Tank 802 ~~Stores: Pitch, Various~~ ~~Roof Type: Fixed~~	1963	63,546 Gallons	777 (Scrubber E)
803	~~Vent Tank~~ 803	Tank 803 ~~Stores: Empty, Various~~ ~~Roof Type: Fixed~~	1963	11,311 Gallons	None
804	~~Stack~~ 777	Tank 804 ~~Stores: Pitch, Various~~ ~~Roof Type: Fixed~~	1966	63,546 ~~55,943~~Gallons	777 (Scrubber E)
805	~~Vent Tank~~ 777 ~~805~~	Tank 805 ~~Stores: Pitch, Various~~ ~~Roof Type:~~	1967	34,264 Gallons	777 (Scrubber E) ~~None~~
806	~~Stack~~ 777	Tank 806 ~~Stores: Pitch, Various~~ ~~Roof Type: Fixed~~	1975	63,546 ~~65,267~~ Gallons	777 (Scrubber E)
808	777	Tank 808	2008	237,944 Gallons	777 (Scrubber E)
~~00B-36~~	~~Vent Tank 540~~	~~Tank 540~~ ~~Stores: Wastewater, Various~~ ~~Roof Type: Fixed~~	~~1953~~	~~259,095 Gallons~~ ~~10,816 Gallons/hr~~	~~None~~
~~00B-37~~	~~Vent Tank 541~~	~~Tank 541~~ ~~Stores: Wastewater, Various~~ ~~Roof Type: Fixed~~	~~1953~~	~~259,095 Gallons~~ ~~10,816 Gallons/hr~~	~~None~~

Emission Unit ID	Emission Point ID	Emission Unit Description	Year Installed	Design Capacity	Control Device
775	~~Stack~~ 775	Scrubber B ~~Manufacturer: Koppers~~		~~Maximum Flow Rate:~~ 250 gal/min	None
~~Tanks-Regulated (Stores Benzene Containing Materials) Group 00B~~					
Effluent Plant Group 00C					
API	Aeration Basin	American Petroleum Institute (API) Separator ~~(50' X 9' X 4')~~ ~~Skims Oil and Stores it in Tank 511 - WWTP~~ ~~Water is sent Tanks 540 and 541~~		180.274 gal/min ~~of process water and 120.000 gal/min of non process water~~	Biological Treatment ~~Control: 95%~~ ~~Enclosed~~
DAF	Aeration Basin	Dissolved Air Floatation (DAF) Separator ~~- WWTP~~ ~~Receives Waster Water from Tanks 540, 541, 501, and 502~~ ~~Removes: Oils and Solids from Wastewater with Polymer~~ ~~Stores oil/solid mixture in Tanks 560 and 561~~		180.274 gal/min ~~of process water and 120.000 gal/min of non process water~~	Biological Treatment ~~Control: 95%~~ ~~Enclosed~~
Aeration Tank	Fugitive	Aeration Basin (Tank) ~~Processes Waste Water - WWTP~~ ~~Processed Waste Water goes to the Clarifier~~		1,000,000 Gallon	None
Clarifier	Fugitive	Primary Clarifier ~~Processes Waste Water - WWTP~~ ~~Processed Waste Water goes to the Clarifier~~		360,000 Gallons ~~for Solid Removal~~	None
510	Aeration Basin	Tank 510 ~~Stores: Sludge/Oil, Process Water - WWTP, Various~~ ~~Roof Type: Fixed~~			Biological Treatment ~~Control: 95%~~ ~~Enclosed~~
511	Aeration Basin	Tank 511 ~~Stores: Sludge/Oil, Various Skimmed Oil - Slop Water - WWTP~~ ~~Roof Type: Fixed~~			Biological Treatment ~~Control: 95%~~ ~~Enclosed~~
540	540	Tank 540	2006	259,095 Gallons	Biological Treatment
541	541	Tank 541	1953	259,095 Gallons	Biological Treatment
Barge and Tankcar Heating Group 00D					
Z01-1	Tankcar Vent	CCOT Tankcar Heating			None
Z01-1	Barge Vent	CCOT Barge Heating			None
Z01-2	Barge Vent	RCO Barge Heating			None
Z01-3	774a or 778~~31/~~	RCO Tankcars Heating			774a or 778~~31~~

Emission Unit ID	Emission Point ID	Emission Unit Description	Year Installed	Design Capacity	Control Device
Tankcar Cleaning Group 00E					
00E	Fugitive	Tankcar Cleaning Station ~~Cleaning Material: Oils~~ ~~Material Removed by Heating Oil~~ ~~Material is Pumped to a Storage Tank and Recycled~~ ~~Cycle takes about 3 days~~		48 Tankcars are Cleaned per year	None
Creosote Processing Unit Group 00F					
~~00F-01~~	~~831/774~~	~~Tank 126~~ ~~Stores: Creosote, Various~~ ~~Roof Type: Fixed~~	~~1981~~	~~60, 910 Gallons~~ ~~2,000 Gallons/hr~~	~~Scrubber A to 831/774~~
~~00F-01~~	~~831/774~~	~~Tank 127~~ ~~Stores: Creosote, Various~~ ~~Roof Type: Fixed~~	~~1970~~	~~60, 158 Gallons~~ ~~2,000 Gallons/hr~~	~~Scrubber A to 831/774~~
221 ~~00F-01~~	774a or 778 ~~Vent Tank 221~~	Tank 221 ~~Stores: Creosote, Various~~ ~~Roof Type: Fixed~~	1956	54,146~~2~~ Gallons ~~3,610 Gallons/hr~~	774a or 778 ~~None~~
222 ~~00F-01~~	774a or 778 ~~Vent Tank 222~~	Tank 222 ~~Stores: Creosote, Various~~ ~~Roof Type: Fixed~~	1956	54,146~~2~~ Gallons ~~3,610 Gallons/hr~~	774a or 778 ~~None~~
223 ~~00F-01~~	774a or 778 ~~Vent Tank 223~~	Tank 223 ~~Stores: Creosote, Various~~ ~~Roof Type: Fixed~~	1956	54,146~~2~~ Gallons ~~3,610 Gallons/hr~~	774a or 778 ~~None~~
224 ~~00F-01~~	774a or 778 ~~Vent Tank 224~~	Tank 224 ~~Stores: Creosote, Various~~ ~~Roof Type: Fixed~~	1956	54,146~~2~~ Gallons ~~3,610 Gallons/hr~~	774a or 778 ~~None~~
Control Devices					
778	778	Thermal Oxider Manufacture: John Zinc Number of Burners: 3	2008	22.3 MMBtu/hr per Burner	None
774a	774a	Flare Manufacturer: Zeco, Inc.	8/19/1994	13.76 MMBtu/hr	None
771	771	Pencil Pitch Baghouse Manufacturer: Wheelabrator	1993		None
777	777	Scrubber E (Oil) Manufacturer: Koppers		Maximum Flow Rate: 250 gal/min	None
Slop Conveying and Recycling Group 00G					
Z03	Fugitive	Slop Conveyor	2007		None
Paved Roadways					
Z04	Fugitive	Paved Roadways			None

LIST OF CONTROL DEVICES

CONTROL DEVICE	SOURCES CONTROLLED	STACK ID
~~#31 Tube Heater~~ Flares or Thermal Oxidizer	#1 Column	774a or 778~~31~~
	~~#1 Pitch Flash Column~~	
	#4 Pitch Flash Column	
	#2~~/4~~ Column	
	#4 Column	
	Decanters 63, 64, 65	
	Melt Pot	
	Debenzolizer ~~(through Tank 89)~~	
	#32 Solvent Column	
	Tanks	
	Product Loading; LR 2-2; LR 3-2, LR 5-3; LR 4-1, LR 4-2, LR 5-2	
~~Scrubber A * to~~	~~Tanks 6, 48, 49, 58, 89, 55, 56, 126, 127~~	~~* Scrubber serves as a knock-out device~~
~~#31 Tube Heater~~		~~831~~
~~Scrubber C * to~~	~~Tanks 83, 623, 3N~~	~~* Scrubber serves as a knock-out device~~
	~~Loading Rack LR 2-2~~	
~~#31 Tube Heater~~		~~831~~
~~Scrubber F to~~	~~Tanks 7, 9~~	~~* Scrubber serves as a knock-out device~~
~~#31 Tube Heater~~		~~831~~
~~Flare~~	~~Back up to the #31 Tube Heater~~	~~774~~
~~Scrubber B~~	~~Tank 4~~	~~775~~
~~Scrubber D~~	~~Tanks 13, 14, 406, 407~~	~~776~~
	~~Loading Racks LR 3-2 and LR 5-3~~	
Scrubber E	Tanks 801, 802, 804, 805, 806, 808	777
	Loading Racks LR 4-5, 5-4, 5-5	
Pencil Pitch Baghouse	Pencil Pitch Dryers	771

CCOT - Crude Coke Oven Tar
NSR – Naphthalene Still Residue
RCO – Refined Chemical Oil
Liquid Fuel – Debenzolizer Overheads and/or Unwashed Solvent
AFCO - Acid Free Chemical Oil
AFO - Acid Free Oil
WWTP - Waste Water Treatment Plant
DAF - Dissolved Air Filtration
PSB – Pavement Sealer Base

1.2. Active R13, R14, and R19 Permits

The underlying authority for any conditions from R13, R14, and/or R19 permits contained in this operating permit is cited using the original permits (e.g. R13-0274). The current applicable version of such permit(s) is listed below.

Permit Number	Date of Issuance
R13-2274F	March 3, 2009

2.0. General Conditions

2.1. Definitions

2.1.1. All references to the "West Virginia Air Pollution Control Act" or the "Air Pollution Control Act" mean those provisions contained in W.Va. Code §§ 22-5-1 to 22-5-18.

2.1.2. The "Clean Air Act" means those provisions contained in 42 U.S.C. §§ 7401 to 7671q, and regulations promulgated thereunder.

2.1.3. "Secretary" means the Secretary of the Department of Environmental Protection or such other person to whom the Secretary has delegated authority or duties pursuant to W.Va. Code §§ 22-1-6 or 22-1-8 (45CSR§30-2.12.). The Director of the Division of Air Quality is the Secretary's designated representative for the purposes of this permit.

2.2. Acronyms

CAAA	Clean Air Act Amendments
CBI	Confidential Business Information
CEM	Continuous Emission Monitor
CES	Certified Emission Statement
C.F.R. *or* CFR	Code of Federal Regulations
CO	Carbon Monoxide
C.S.R. *or* CSR	Codes of State Rules
DAQ	Division of Air Quality
DEP	Department of Environmental Protection
FOIA	Freedom of Information Act
HAP	Hazardous Air Pollutant
HON	Hazardous Organic NESHAP
HP	Horsepower
lbs/hr *or* lb/hr	Pounds per Hour
LDAR	Leak Detection and Repair
M	Thousand
MACT	Maximum Achievable Control Technology
MM	Million
MMBtu/hr *or* mmbtu/hr	Million British Thermal Units per Hour
MMCF/hr *or* mmcf/hr	Million Cubic Feet Burned per Hour
NA	Not Applicable
NAAQS	National Ambient Air Quality Standards
NESHAPS	National Emissions Standards for Hazardous Air Pollutants
NO_x	Nitrogen Oxides
NSPS	New Source Performance Standards
PM	Particulate Matter
PM_{10}	Particulate Matter less than 10μm in diameter
pph	Pounds per Hour
ppm	Parts per Million
PSD	Prevention of Significant Deterioration
psi	Pounds per Square Inch
SIC	Standard Industrial Classification
SIP	State Implementation Plan
SO_2	Sulfur Dioxide
TAP	Toxic Air Pollutant
TPY	Tons per Year
TPY	Tons (short) per Year
1 Ton (short)	Equals 2000 pounds
1 Metric Ton	Equals 2204.623 pounds
TRS	Total Reduced Sulfur
TSP	Total Suspended Particulate
USEPA	United States Environmental Protection Agency
UTM	Universal Transverse Mercator
VEE	Visual Emissions Evaluation
VOC	Volatile Organic Compounds

2.3. Permit Expiration and Renewal

2.3.1. Permit duration. This permit is issued for a fixed term of five (5) years and shall expire on the date specified on the cover of this permit, except as provided in 45CSR§30-6.3.b. and 45CSR§30-6.3.c.
[45CSR§30-5.1.b.]

2.3.2. A permit renewal application is timely if it is submitted at least six (6) months prior to the date of permit expiration.
[45CSR§30-4.1.a.3.]

2.3.3. Permit expiration terminates the source's right to operate unless a timely and complete renewal application has been submitted consistent with 45CSR§30-6.2. and 45CSR§30-4.1.a.3.
[45CSR§30-6.3.b.]

2.3.4. If the Secretary fails to take final action to deny or approve a timely and complete permit application before the end of the term of the previous permit, the permit shall not expire until the renewal permit has been issued or denied, and any permit shield granted for the permit shall continue in effect during that time.
[45CSR§30-6.3.c.]

2.4. Permit Actions

2.4.1. This permit may be modified, revoked, reopened and reissued, or terminated for cause. The filing of a request by the permittee for a permit modification, revocation and reissuance, or termination, or of a notification of planned changes or anticipated noncompliance does not stay any permit condition.
[45CSR§30-5.1.f.3.]

2.5. Reopening for Cause

2.5.1. This permit shall be reopened and revised under any of the following circumstances:

a. Additional applicable requirements under the Clean Air Act or the Secretary's legislative rules become applicable to a major source with a remaining permit term of three (3) or more years. Such a reopening shall be completed not later than eighteen (18) months after promulgation of the applicable requirement. No such reopening is required if the effective date of the requirement is later than the date on which the permit is due to expire, unless the original permit or any of its terms and conditions has been extended pursuant to 45CSR§§30-6.6.a.1.A. or B.

b. Additional requirements (including excess emissions requirements) become applicable to an affected source under Title IV of the Clean Air Act (Acid Deposition Control) or other legislative rules of the Secretary. Upon approval by U.S. EPA, excess emissions offset plans shall be incorporated into the permit.

c. The Secretary or U.S. EPA determines that the permit contains a material mistake or that inaccurate statements were made in establishing the emissions standards or other terms or conditions of the permit.

d. The Secretary or U.S. EPA determines that the permit must be revised or revoked and reissued to assure compliance with the applicable requirements.

[45CSR§30-6.6.a.]

2.6. Administrative Permit Amendments

2.6.1. The permittee may request an administrative permit amendment as defined in and according to the procedures specified in 45CSR§30-6.4.
[45CSR§30-6.4.]

2.7. Minor Permit Modifications

2.7.1. The permittee may request a minor permit modification as defined in and according to the procedures specified in 45CSR§30-6.5.a.
[45CSR§30-6.5.a.]

2.8. Significant Permit Modification

2.8.1. The permittee may request a significant permit modification, in accordance with 45CSR§30-6.5.b., for permit modifications that do not qualify for minor permit modifications or as administrative amendments.
[45CSR§30-6.5.b.]

2.9. Emissions Trading

2.9.1. No permit revision shall be required, under any approved economic incentives, marketable permits, emissions trading, and other similar programs or processes for changes that are provided for in the permit and that are in accordance with all applicable requirements.
[45CSR§30-5.1.h.]

2.10. Off-Permit Changes

2.10.1. Except as provided below, a facility may make any change in its operations or emissions that is not addressed nor prohibited in its permit and which is not considered to be construction nor modification under any rule promulgated by the Secretary without obtaining an amendment or modification of its permit. Such changes shall be subject to the following requirements and restrictions:

a. The change must meet all applicable requirements and may not violate any existing permit term or condition.

b. The permittee must provide a written notice of the change to the Secretary and to U.S. EPA within two (2) business days following the date of the change. Such written notice shall describe each such change, including the date, any change in emissions, pollutants emitted, and any applicable requirement that would apply as a result of the change.

c. The change shall not qualify for the permit shield.

d. The permittee shall keep records describing all changes made at the source that result in emissions of regulated air pollutants, but not otherwise regulated under the permit, and the emissions resulting from those changes.

e. No permittee may make any change subject to any requirement under Title IV of the Clean Air Act (Acid Deposition Control) pursuant to the provisions of 45CSR§30-5.9.

f. No permittee may make any changes which would require preconstruction review under any provision of Title I of the Clean Air Act (including 45CSR14 and 45CSR19) pursuant to the provisions of 45CSR§30-5.9.

[45CSR§30-5.9.]

2.11. Operational Flexibility

2.11.1. The permittee may make changes within the facility as provided by § 502(b)(10) of the Clean Air Act. Such operational flexibility shall be provided in the permit in conformance with the permit application and applicable requirements. No such changes shall be a modification under any rule or any provision of Title I of the Clean Air Act (including 45CSR14 and 45CSR19) promulgated by the Secretary in accordance with Title I of the Clean Air Act and the change shall not result in a level of emissions exceeding the emissions allowable under the permit.
[45CSR§30-5.8]

2.11.2. Before making a change under 45CSR§30-5.8., the permittee shall provide advance written notice to the Secretary and to U.S. EPA, describing the change to be made, the date on which the change will occur, any changes in emissions, and any permit terms and conditions that are affected. The permittee shall thereafter maintain a copy of the notice with the permit, and the Secretary shall place a copy with the permit in the public file. The written notice shall be provided to the Secretary and U.S. EPA at least seven (7) days prior to the date that the change is to be made, except that this period may be shortened or eliminated as necessary for a change that must be implemented more quickly to address unanticipated conditions posing a significant health, safety, or environmental hazard. If less than seven (7) days notice is provided because of a need to respond more quickly to such unanticipated conditions, the permittee shall provide notice to the Secretary and U.S. EPA as soon as possible after learning of the need to make the change.
[45CSR§30-5.8.a.]

2.11.3. The permit shield shall not apply to changes made under 45CSR§30-5.8., except those provided for in 45CSR§30-5.8.d. However, the protection of the permit shield will continue to apply to operations and emissions that are not affected by the change, provided that the permittee complies with the terms and conditions of the permit applicable to such operations and emissions. The permit shield may be reinstated for emissions and operations affected by the change:

a. If subsequent changes cause the facility's operations and emissions to revert to those authorized in the permit and the permittee resumes compliance with the terms and conditions of the permit, or

b. If the permittee obtains final approval of a significant modification to the permit to incorporate the change in the permit.

[45CSR§30-5.8.c.]

2.11.4. "Section 502(b)(10) changes" are changes that contravene an express permit term. Such changes do not include changes that would violate applicable requirements or contravene enforceable permit terms and conditions that are monitoring (including test methods), recordkeeping, reporting, or compliance certification requirements.
[45CSR§30-2.39]

2.12. Reasonably Anticipated Operating Scenarios

2.12.1. The following are terms and conditions for reasonably anticipated operating scenarios identified in this permit.

a. Contemporaneously with making a change from one operating scenario to another, the permittee shall record in a log at the permitted facility a record of the scenario under which it is operating and to document the change in reports submitted pursuant to the terms of this permit and 45CSR30.

b. The permit shield shall extend to all terms and conditions under each such operating scenario; and

c. The terms and conditions of each such alternative scenario shall meet all applicable requirements and the requirements of 45CSR30.

[45CSR§30-5.1.i.]

2.13. Duty to Comply

2.13.1. The permittee must comply with all conditions of this permit. Any permit noncompliance constitutes a violation of the West Virginia Code and the Clean Air Act and is grounds for enforcement action by the Secretary or USEPA; for permit termination, revocation and reissuance, or modification; or for denial of a permit renewal application.
[45CSR§30-5.1.f.1.]

2.14. Inspection and Entry

2.14.1. The permittee shall allow any authorized representative of the Secretary, upon the presentation of credentials and other documents as may be required by law, to perform the following:

a. At all reasonable times (including all times in which the facility is in operation) enter upon the permittee's premises where a source is located or emissions related activity is conducted, or where records must be kept under the conditions of this permit;

b. Have access to and copy, at reasonable times, any records that must be kept under the conditions of this permit;

c. Inspect at reasonable times (including all times in which the facility is in operation) any facilities, equipment (including monitoring and air pollution Control equipment), practices, or operations regulated or required under the permit;

d. Sample or monitor at reasonable times substances or parameters to determine compliance with the permit or applicable requirements or ascertain the amounts and types of air pollutants discharged.

[45CSR§30-5.3.b.]

2.15. Schedule of Compliance

2.15.1. For sources subject to a compliance schedule, certified progress reports shall be submitted consistent with the applicable schedule of compliance set forth in this permit and 45CSR§30-4.3.h., but at least every six (6) months, and no greater than once a month, and shall include the following:

a. Dates for achieving the activities, milestones, or compliance required in the schedule of compliance, and dates when such activities, milestones or compliance were achieved; and

b. An explanation of why any dates in the schedule of compliance were not or will not be met, and any preventative or corrective measure adopted.

[45CSR§30-5.3.d.]

2.16. Need to Halt or Reduce Activity not a Defense

2.16.1. It shall not be a defense for a permittee in an enforcement action that it would have been necessary to halt or reduce the permitted activity in order to maintain compliance with the conditions of this permit. However, nothing in this paragraph shall be construed as precluding consideration of a need to halt or reduce activity as a mitigating factor in determining penalties for noncompliance if the health, safety, or environmental impacts of halting or reducing operations would be more serious than the impacts of continued operations.
[45CSR§30-5.1.f.2.]

2.17. Emergency

2.17.1. An "emergency" means any situation arising from sudden and reasonably unforeseeable events beyond the control of the source, including acts of God, which situation requires immediate corrective action to restore normal operation, and that causes the source to exceed a technology-based emission limitation under the permit, due to unavoidable increases in emissions attributable to the emergency. An emergency shall not include noncompliance to the extent caused by improperly designed equipment, lack of preventative maintenance, careless or improper operation, or operator error.
[45CSR§30-5.7.a.]

2.17.2. Effect of any emergency. An emergency constitutes an affirmative defense to an action brought for noncompliance with such technology-based emission limitations if the conditions of 45CSR§30-5.7.c. are met.
[45CSR§30-5.7.b.]

2.17.3. The affirmative defense of emergency shall be demonstrated through properly signed, contemporaneous operating logs, or other relevant evidence that:

a. An emergency occurred and that the permittee can identify the cause(s) of the emergency;

b. The permitted facility was at the time being properly operated;

c. During the period of the emergency the permittee took all reasonable steps to minimize levels of emissions that exceeded the emission standards, or other requirements in the permit; and

d. Subject to the requirements of 45CSR§30-5.1.c.3.C.1, the permittee submitted notice of the emergency to the Secretary within one (1) working day of the time when emission limitations were exceeded due to the emergency and made a request for variance, and as applicable rules provide. This notice, report, and variance request fulfills the requirement of 45CSR§30-5.1.c.3.B. This notice must contain a detailed description of the emergency, any steps taken to mitigate emissions, and corrective actions taken.

[45CSR§30-5.7.c.]

2.17.4. In any enforcement proceeding, the permittee seeking to establish the occurrence of an emergency has the burden of proof.
[45CSR§30-5.7.d.]

2.17.5. This provision is in addition to any emergency or upset provision contained in any applicable requirement.
[45CSR§30-5.7.e.]

2.18. Federally-Enforceable Requirements

2.18.1. All terms and conditions in this permit, including any provisions designed to limit a source's potential to emit and excepting those provisions that are specifically designated in the permit as "State-enforceable only", are enforceable by the Secretary, USEPA, and citizens under the Clean Air Act.
[45CSR§30-5.2.a.]

2.18.2. Those provisions specifically designated in the permit as “State-enforceable only” shall become “Federally-enforceable” requirements upon SIP approval by the USEPA.

2.19. Duty to Provide Information

2.19.1. The permittee shall furnish to the Secretary within a reasonable time any information the Secretary may request in writing to determine whether cause exists for modifying, revoking and reissuing, or terminating the permit or to determine compliance with the permit. Upon request, the permittee shall also furnish to the Secretary copies of records required to be kept by the permittee. For information claimed to be confidential, the permittee shall furnish such records to the Secretary along with a claim of confidentiality in accordance with 45CSR31. If confidential information is to be sent to USEPA, the permittee shall directly provide such information to USEPA along with a claim of confidentiality in accordance with 40 C.F.R. Part 2.
[45CSR§30-5.1.f.5.]

2.20. Duty to Supplement and Correct Information

2.20.1. Upon becoming aware of a failure to submit any relevant facts or a submittal of incorrect information in any permit application, the permittee shall promptly submit to the Secretary such supplemental facts or corrected information.
[45CSR§30-4.2.]

2.21. Permit Shield

2.21.1. Compliance with the conditions of this permit shall be deemed compliance with any applicable requirements as of the date of permit issuance provided that such applicable requirements are included and are specifically identified in this permit or the Secretary has determined that other requirements specifically identified are not applicable to the source and this permit includes such a determination or a concise summary thereof.
[45CSR§30-5.6.a.]

2.21.2. Nothing in this permit shall alter or affect the following:

a. The liability of an owner or operator of a source for any violation of applicable requirements prior to or at the time of permit issuance; or

b. The applicable requirements of the Code of West Virginia and Title IV of the Clean Air Act (Acid Deposition Control), consistent with § 408 (a) of the Clean Air Act.

c. The authority of the Administrator of U.S. EPA to require information under § 114 of the Clean Air Act or to issue emergency orders under § 303 of the Clean Air Act.

[45CSR§30-5.6.c.]

2.22. Credible Evidence

2.22.1. Nothing in this permit shall alter or affect the ability of any person to establish compliance with, or a violation of, any applicable requirement through the use of credible evidence to the extent authorized by law. Nothing in this permit shall be construed to waive any defenses otherwise available to the permittee including but not limited to any challenge to the credible evidence rule in the context of any future proceeding.
[45CSR§30-5.3.e.3.B. and 45CSR38]

2.23. Severability

2.23.1. The provisions of this permit are severable. If any provision of this permit, or the application of any provision of this permit to any circumstance is held invalid by a court of competent jurisdiction, the remaining permit terms and conditions or their application to other circumstances shall remain in full force and effect.
[45CSR§30-5.1.e.]

2.24. Property Rights

2.24.1. This permit does not convey any property rights of any sort or any exclusive privilege.
[45CSR§30-5.1.f.4]

2.25. Acid Deposition Control

2.25.1. Emissions shall not exceed any allowances that the source lawfully holds under Title IV of the Clean Air Act (Acid Deposition Control) or rules of the Secretary promulgated thereunder.

a. No permit revision shall be required for increases in emissions that are authorized by allowances acquired pursuant to the acid deposition control program, provided that such increases do not require a permit revision under any other applicable requirement.

b. No limit shall be placed on the number of allowances held by the source. The source may not, however, use allowances as a defense to noncompliance with any other applicable requirement.

c. Any such allowance shall be accounted for according to the procedures established in rules promulgated under Title IV of the Clean Air Act.

[45CSR§30-5.1.d.]

2.25.2. Where applicable requirements of the Clean Air Act are more stringent than any applicable requirement of regulations promulgated under Title IV of the Clean Air Act (Acid Deposition Control), both provisions shall be incorporated into the permit and shall be enforceable by the Secretary and U. S. EPA.
[45CSR§30-5.1.a.2.]

3.0. Facility-Wide Requirements

3.1. Limitations and Standards

3.1.1. **Open burning.** The open burning of refuse by any person~~, firm, corporation, association or public agency~~ is prohibited except as noted in 45CSR§6-3.1.
[45CSR§6-3.1.]

3.1.2. **Open burning exemptions.** The exemptions listed in 45CSR§6-3.1 are subject to the following stipulation: Upon notification by the Secretary, no person shall cause~~, suffer,~~ or allow ~~permit~~ any form of open burning during existing or predicted periods of atmospheric stagnation. Notification shall be made by such means as the Secretary may deem necessary and feasible.
[45CSR§6-3.2.]

3.1.3. **Asbestos.** The permittee is responsible for thoroughly inspecting the facility, or part of the facility, prior to commencement of demolition or renovation for the presence of asbestos and complying with 40 C.F.R. § 61.145, 40 C.F.R. § 61.148, and 40 C.F.R. § 61.150. The permittee must notify the Secretary at least ten (10) working days prior to the commencement of any asbestos removal on the forms prescribed by the Secretary if the permittee is subject to the notification requirements of 40 C.F.R. § 61.145(b)(3)(i). A copy of this notice is required to be sent to the USEPA, the Division of Waste Management and the Bureau for Public Health - Environmental Health.
[40 C.F.R. 61]

3.1.4. **Odor.** No person shall cause, suffer, allow or permit the discharge of air pollutants which cause or contribute to an objectionable odor at any location occupied by the public.
[45CSR§4-3.1 State-Enforceable only.]

3.1.5. **[Reserved]**

3.1.6. **Standby plan for reducing emissions.** When requested by the Secretary, the permittee shall prepare standby plans for reducing the emissions of air pollutants in accordance with the objectives set forth in Tables I, II, and III of 45CSR11.
[45CSR§11-5.2]

3.1.7. **Emission inventory.** The permittee is responsible for submitting, on an annual basis, an emission inventory in accordance with the submittal requirements of the Division of Air Quality. This report is to be submitted no later than July 1 of each year unless directed by DAQ.
[W.Va. Code § 22-5-4(a)(14)]

3.1.8. **Ozone-depleting substances.** For those facilities performing maintenance, service, repair or disposal of appliances, the permittee shall comply with the standards for recycling and emissions reduction pursuant to 40 C.F.R. Part 82, Subpart F, except as provided for Motor Vehicle Air Conditioners (MVACs) in Subpart B:

a. Persons opening appliances for maintenance, service, repair, or disposal must comply with the prohibitions and required practices pursuant to 40 C.F.R. §§ 82.154 and 82.156.

b. Equipment used during the maintenance, service, repair, or disposal of appliances must comply with the standards for recycling and recovery equipment pursuant to 40 C.F.R. § 82.158.

c. Persons performing maintenance, service, repair, or disposal of appliances must be certified by an approved technician certification program pursuant to 40 C.F.R. § 82.161.

[40 C.F.R. 82, Subpart F]

3.1.9. **Risk Management Plan.** Should this stationary source, as defined in 40 C.F.R. § 68.3, become subject to Part 68, then the owner or operator shall submit a risk management plan (RMP) by the date specified in 40 C.F.R. § 68.10 and shall certify compliance with the requirements of Part 68 as part of the annual compliance certification as required by 40 C.F.R. Part 70 or 71.
[40 C.F.R. 68]

A. Toxic Air Pollutants

3.1.10. Except as provided in 45CSR§27-3.2and 3.3, the owner or operator of a plant that discharges or may discharge a toxic air pollutant into the open air in excess of the amount shown in the Table A of 45CSR27 shall employ BAT at all chemical processing units emitting the toxic air pollutant: Provided, that any source or equipment specifically subject to a federal regulation or standard shall not be required to comply with provisions more stringent than such regulation or standard.
[45CSR§27-3.1., ~~45CSR13, R13-2274D, B.1.,~~ Group 001, 002, 003, 005, 006, 007, 008, 009, 00A, ~~00B~~, 00C, 00D, and 00E] [State-only Enforceable]

3.1.11. All chemical processing units shall be properly instrumented to alert the operator of process upsets, leaks, and other abnormal discharges of toxic air pollutants into the air and the operator shall record all such incidents and the associated emissions estimated from direct measurements of toxic air pollutant concentration and/or calculations using other process measurements.
[45CSR§27-3.4., ~~45CSR13, R13-2274D, B.1.,~~ Group 001, 002, 003, 005, 006, 007, 008, 009, 00A, ~~00B~~, 00C, 00D, and 00E] [State-only Enforceable]

3.1.12. The Director may on a case-by-case basis require the installation and proper operation of monitoring devices to continuously or intermittently determine the concentrations or mass emission rates of toxic air pollutants normally or routinely emitted to the air.
[45CSR§27-3.5., ~~45CSR13, R13-2274D, B.1.,~~ Group 001, 002, 003, 005, 006, 007, 008, 009, 00A, ~~00B~~, 00C, 00D, and 00E] [State-only Enforceable]

3.1.13. All owners and operators subject to the requirements of 45CSR27 shall, by application of BAT, prevent and control fugitive emissions to the air of toxic air pollutants as a result of leakage from equipment in toxic air pollutant service including but not limited to, pump seals, compressor seals, valves, sampling connections, open-ended lines, safety relief valves, and flanges. In no event shall any equipment standard, program, or work practice less stringent than required under 40 C.F.R. Part 61, Subpart V be deemed to represent BAT for control of toxic air pollutant emissions: Provided, that any source or equipment specifically subject to a federal regulation or standard shall not be required to comply with provisions more stringent than such federal regulation and standard. Equipment to be used in toxic air pollutant service installed after the effective date of 45CSR27 shall, to the maximum extent possible, be designed and operated so as to prevent leaks of toxic air pollutants. Koppers monitors equipment in benzene service in accordance with 40 CFR Part 63, Subpart H.
[45CSR§27-4.1., ~~45CSR13, R13-2274D, B.1.,~~ Group 001, 002, 003, 005, 006, 007, 008, 009, 00A, ~~00B~~, 00C, 00D, and 00E] [State-only Enforceable]

3.1.14. Owners and operators of chemical processing units or facilities subject to the requirements of 45CSR27 shall prevent and control working and filling losses of toxic air pollutants from tanks by routing such tank emissions to BAT control devices. The Director may approve the use of floating roof storage tanks as BAT, provided that such tanks are designed and operated in a manner which minimizes toxic air pollutant emissions taking into consideration the toxic air pollutant emission rate, tank size, and control efficiency associated with such tanks. On a case-by-case basis, the Director may exempt very small process or storage tanks or tanks

storing material mixtures containing low mass fractions of toxic air pollutants from the BAT requirements taking into consideration the actual level of emissions control and/or the toxic air pollutant emission rate from the tank.
[45CSR§27-5.1., ~~45CSR13, R13-2274D, B.1.,~~ Group 002, 003, 006, 008, 009, 00A, ~~00B~~, 00C, 00D, and 00E] [State-only Enforceable]

B. Particulate Matter from Manufacturing Processes and Associated Operations

3.1.15. No person shall cause, suffer, allow or permit emission of smoke and/or particulate matter into the open air from any process source operation which is greater than twenty (20) percent opacity, except as noted in 45CSR§§7-3.2 [Sections 3.1.16], 3.3, 3.4, 3.5, 3.6, and 3.7 [Section 3.1.17].
[45CSR§7-3.1.]

3.1.16. The provisions of Sections 3.1.15 [45CSR§7-3.1.] shall not apply to smoke and/or particulate matter emitted from any process source operation which is less than forty (40) percent opacity for any period or periods aggregating no more than five (5) minutes in any sixty (60) minute period.
[45CSR§7-3.2.]

3.1.17. ~~**No person shall cause, suffer, allow or permit visible emissions from any storage structure(s) associated with any manufacturing process(es) that pursuant to Section 3.1.21 [45CSR§7-5.1.] is required to have a full enclosure and be equipped with a particulate matter control device.**~~
~~**[45CSR§7-3.7., Groups 00A, 00B, 00F, Tanks 510 and 511]**~~ **Reserved**

3.1.18. No person shall cause, suffer, allow or permit particulate matter to be vented into the open air from any type source operation or duplicate source operation, or from all air pollution control equipment installed on any type source operation or duplicate source operation in excess of the quantity specified under the appropriate source operation type in 45CSR7, Table 45-7A.
[45CSR§7-4.1.]

3.1.19. Any stack serving any process source operation or air pollution control equipment on any process source operation shall contain flow straightening devices or a vertical run of sufficient length to establish flow patterns consistent with acceptable stack sampling procedures.
[45CSR§7-4.12.]

3.1.20. No person shall cause, suffer, allow, or permit any manufacturing process generating fugitive particulate matter to operate that is not equipped with a system to minimize the emissions of fugitive particulate matter. To minimize means that a particulate capture or suppression system shall be installed to ensure the lowest fugitive particulate emissions reasonably achievable.
[45CSR§7-5.1.]

3.1.22. The owner or operator of a plant shall maintain dust control of the plant premises, and plant owned, leased or controlled access roads, by paving, application of asphalt, chemical dust suppressants or other suitable dust control measures. Good operating practices shall be implemented and when necessary dust suppressants shall be applied in relation to stockpiling and general material handling to prevent dust generation and atmospheric entrainment.
[45CSR§7-5.2.]

3.1.23. Due to unavoidable malfunction of equipment, emissions exceeding those set forth in 45CSR7 may be permitted by the Director for periods not to exceed ten (10) days upon specific application to the Director. Such application shall be made within twenty-four (24) hours of the malfunction. In cases of major equipment failure, additional time periods may be granted by the Director provided a corrective program has been submitted by the owner or operator and approved by the Director.
[45CSR§7-9.1.]

3.1.24. Maintenance operations (as defined in 45CSR7) shall be exempt from the provisions of 45CSR§7-4 provided that at all times the owner or operator shall conduct maintenance operations in a manner consistent with good air pollution control practice for minimizing emissions. Determination of whether acceptable operating and maintenance procedures are being used will be based on information available to the Director which may include, but is not limited to, monitoring results, opacity observations, review of operating and maintenance procedures and inspection of the source.
[45CSR§7-10.3.]

3.1.25. An owner or operator may apply for an alternative visible emission standard for start-up and shutdown periods, on a case-by-case basis, by filing a written petition with the Director. The Director may approve an alternative visible emission standard for start-ups and shutdowns to the visible emission standard required under 45CSR§7-3. The petition shall include a demonstration satisfactory to the Director:

a. That it is technologically or economically infeasible to comply with 45CSR§7-3;

b. That establishes the need for approval of a start-up or shutdown plan based upon information including, but not limited to, monitoring results, opacity observations, operating procedures and source inspections.

c. That the particulate matter weight emission standards under section 4 are being met, as determined in accordance with 45CSR7A - "Compliance Test Procedures For 45CSR7 - ' To Prevent and Control Particulate Air Pollution From Manufacturing Process Operations'"; and

d. That during periods of start-ups and shutdowns the owner or operator shall, to the extent practicable, maintain and operate any manufacturing process including associated air pollution control equipment in a manner consistent with good air pollution control practice for minimizing emissions. Determination of whether acceptable operating and maintenance procedures are being used will be based on information available to the Director which may include, but is not limited to, monitoring results, opacity observations, review of operating and maintenance procedures and inspection of the source.

[45CSR§7-10.4.]

3.1.26. The permitted facility shall be constructed and operated in accordance with the plans and specifications filed in Permit Application R13-2274, R13-2274A, R13-2274B, R13-2274C, R13-2274D, R13-2274E, and R13-2274F and any modifications, administrative updates, or amendments thereto. The Secretary may suspend or revoke a permit if the plans and specifications upon which the approval was based are not adhered to.
[45CSR13, R13-2274, 2.5.1.]

3.1.27. Emissions from the 4 tube heaters, the pencil pitch hot oil heater and the pencil pitch dryer combined, shall not exceed the following:

PM		NO_x		SO_2		CO		VOCs		Total HAPs	
lb/hr	tpy	lb/hr	tpy	lb/hr	tpy	lb/hr	tpy	lb/hr	tpy	lb/hr	tpy
0.52	2.27	6.8	29.9	0.04	0.18	5.71	25.12	0.37	1.65	0.13	0.57

Compliance for 45CSR§§2-4.1. and 4.1.b (particulate matter emissions) and 45CSR§§10-3.1. and 3.1.e (sulfur dioxide emissions) for the tube heaters will be shown by the more stringent requirement in this section.

[45CSR§§2-4.1. and 4.1.b., 45CSR§§10-3.1. and 3.1.e., 45CSR13, R13-2274, 4.1.9., (770, 773, 831, 881, 882, 884)]

3.1.28. Annual emissions from the entire facility shall not exceed the following:

VOCs	Benzene	Naphthalene	Total POM	Total HAPs
44 tpy	3.4 tpy	6.0 tpy	9.9 tpy	24.2 tpy

[45CSR13, R13-2274, 4.1.22.]

3.1.29. Upon the request of the Director or his authorized representative, the permittee shall provide copies of any records/calculations required by this permit.
[45CSR13, R13-2274, 4.5.1.]

3.2. Monitoring Requirements

3.2.1. The permittee shall conduct monitoring/Record Keeping/reporting as follows. [Not required for open stockpiles, haulroads.]

~~a.~~The permittee shall perform monthly **Method 22 like** visible emission observations on **Stacks 771, 774a, 777, 778, and 993. The checks shall be performed during periods of normal operation and appropriate weather conditions, and for a sufficient time interval, but no less than one minute, to determine if any visible emissions are present. If visible emissions are observed, the permittee shall conduct an opacity evaluation in accordance with Method 9 of 40 C.F.R. 60 Appendix A within 24 hours unless the visible emissions are corrected beforehand.** ~~**in accordance with 40 C.F.R. 60 Appendix A, Method 22 the following emission points:**~~

- ~~**Pencil Pitch Baghouse (Stack 771)**~~
- ~~**Scrubber B (Stack 775) controlling emissions from Tank 4 under Group 00B**~~
- ~~**Scrubber D (Stack 776) controlling emissions from Tank 13, 14, 406, 407 under Group 00A and Loading Rack 3-2 and 5-3 under Group 009**~~
- ~~**Scrubber E (Stack 777) controlling emissions from Tank 801, 802, 804, 806 under Group 00A and Loading Rack 4-5, 5-4 and 5-5 under Group 009.**~~

~~**The permittee shall conduct monthly visible emission observations to determine if visible emissions are present. If visible emissions are observed, the permittee shall conduct an opacity evaluation in accordance with 45CSR7A, within 24 hours unless the visible emissions are corrected beforehand and the units are operated at normal operating conditions.**~~

~~**The monthly visible emission obersvations shall consist of Method 22 like visible emission checks.**~~ At a minimum, the observer must be trained and knowledgeable regarding the effects of background contrast, ambient lighting, observer position relative to lighting, wind, and the presence of uncombined water (condensing water vapor) on the visibility of emissions. This training may be obtained from written materials found in the References 1 and 2 from 40 C.F.R. Part 60, Appendix A, Method 22 or from the lecture portion

of the 40 C.F.R. Part 60, Appendix A, Method 9 certification course.

~~**The visible emission check shall be performed during periods of normal facility operation and appropriate weather conditions and for a sufficient time interval, but no less than one (1) minute, to determine if any visible emissions are present.**~~

~~**b.**~~A record of each visible emissions observation shall be maintained~~**, including any data required by 40 C.F.R. 60 Appendix A, Method 22 or 45CSR7A, whichever is appropriate.**~~ The record shall include, at a minimum, the date, time, name of the emission unit, the applicable visible emissions requirement, the results of the observation, the name of the observer, any maintenance or corrective actions taken as a result of the observations. ~~**Records shall be maintained on site for a period of no less than five (5) years stating any monthly, and the times the fugitive dust control system(s) are inoperable and.**~~

[45CSR§30-5.1.c., 45CSR13, R13-2274, 4.2.2. and 4.4.4., Stacks 771, 774a, ~~775, 776,~~ 777, 778 and 993]

3.2.2. At the request of the Director the owner and/or operator of a source shall install such stack gas monitoring devices as the Director deems necessary to determine compliance with the provisions of 45CSR10. The data from such devices shall be readily available at the source location or such other reasonable location that the Director may specify. At the request of the Director, or his or her duly authorized representative, such data shall be made available for inspection or copying. Failure to promptly provide such data shall constitute a violation of 45CSR10.
[45CSR§10-8.2.a., Stacks 774a, 778, ~~831,~~ 881, 882, 884, 992, 993, 995]

3.3. Testing Requirements

3.3.1. **Stack testing.** As per provisions set forth in this permit or as otherwise required by the Secretary, in accordance with the West Virginia Code, underlying regulations, permits and orders, the permittee shall conduct test(s) to determine compliance with the emission limitations set forth in this permit and/or established or set forth in underlying documents. The Secretary, or his duly authorized representative, may at his option witness or conduct such test(s). Should the Secretary exercise his option to conduct such test(s), the operator shall provide all necessary sampling connections and sampling ports to be located in such manner as the Secretary may require, power for test equipment and the required safety equipment, such as scaffolding, railings and ladders, to comply with generally accepted good safety practices. Such tests shall be conducted in accordance with the methods and procedures set forth in this permit or as otherwise approved or specified by the Secretary in accordance with the following:

a. The Secretary may on a source-specific basis approve or specify additional testing or alternative testing to the test methods specified in the permit for demonstrating compliance with 40 C.F.R. Parts 60, 61, and 63, if applicable, in accordance with the Secretary's delegated authority and any established equivalency determination methods which are applicable.

b. The Secretary may on a source-specific basis approve or specify additional testing or alternative testing to the test methods specified in the permit for demonstrating compliance with applicable requirements which do not involve federal delegation. In specifying or approving such alternative testing to the test methods, the Secretary, to the extent possible, shall utilize the same equivalency criteria as would be used in approving such changes under Section 3.3.1.a. of this permit.

c. All periodic tests to determine mass emission limits from or air pollutant concentrations in discharge stacks and such other tests as specified in this permit shall be conducted in accordance with an approved test protocol. Unless previously approved, such protocols shall be submitted to the Secretary in writing at least thirty (30) days prior to any testing and shall contain the information set forth by the Secretary. In addition, the permittee shall notify the Secretary at least fifteen (15) days prior to any testing so the Secretary may have the opportunity to observe such tests. This notification shall include the actual date

and time during which the test will be conducted and, if appropriate, verification that the tests will fully conform to a referenced protocol previously approved by the Secretary.

[WV Code § 22-5-4(a)(15) and 45CSR13, All Groups]

3.4. Recordkeeping Requirements

3.4.1. **Monitoring information.** The permittee shall keep records of monitoring information that include the following:

a. The date, place as defined in this permit and time of sampling or measurements;

b. The date(s) analyses were performed;

c. The company or entity that performed the analyses;

d. The analytical techniques or methods used;

e. The results of the analyses; and

f. The operating conditions existing at the time of sampling or measurement.

[45CSR§30-5.1.c.2.A., 45CSR13, R13-2274, 4.4.1.]

3.4.2. **Retention of records.** The permittee shall retain records of all required monitoring data and support information for a period of at least five (5) years from the date of monitoring sample, measurement, report, application, or record creation date. Support information includes all calibration and maintenance records and all original strip-chart recordings for continuous monitoring instrumentation, and copies of all reports required by the permit. Where appropriate, records may be maintained in computerized form in lieu of the above records.
[45CSR§30-5.1.c.2.B.]

3.4.3. **Odors.** For the purposes of 45CSR4, the permittee shall maintain a record of all odor complaints received. Such record shall contain an assessment of the validity of the complaints as well as any corrective actions taken.
[45CSR§30-5.1.c. State-Enforceable only.]

A. Air Toxic Pollutants

3.4.4. Written records shall be maintained that identify all pumps, compressors, pressure relief valves, valves, sampling connections, open-ended lines, and flanges of a chemical processing unit that are in toxic air pollutant service. These records shall record the results of all monitoring and inspections, emissions control measures applied and the nature, timing, and results of repair efforts.
[45CSR§27-10.3., ~~45CSR13, R13-2274D, B.1.&B.6.,~~ Group 001, 002, 003, 005, 006, 007, 008, 009, 00A, ~~00B~~, 00C, 00D, and 00E]

3.5. Reporting Requirements

3.5.1. **Responsible official.** Any application form, report, or compliance certification required by this permit to be submitted to the DAQ and/or USEPA shall contain a certification by the responsible official that states that, based on information and belief formed after reasonable inquiry, the statements and information in the document are true, accurate and complete.
[45CSR§§30-4.4. *and* 5.1.c.3.D.]

3.5.2. A permittee may request confidential treatment for the submission of reporting required under 45CSR§30-5.1.c.3 pursuant to the limitations and procedures of W.Va. Code § 22-5-10 and 45CSR31.
[45CSR§30-5.1.c.3.E.]

3.5.3. All notices, requests, demands, submissions and other communications required or permitted to be made to the Secretary of DEP and/or USEPA shall be made in writing and shall be deemed to have been duly given when delivered by hand, mailed first class or by private carrier with postage prepaid to the address(es) set forth below or to such other person or address as the Secretary of the Department of Environmental Protection may designate:

If to the DAQ:

Director
WVDEP
Division of Air Quality
601 57th Street SE
Charleston, WV 25304

Phone: 304/926-0475
FAX: 304/926-0478

If to the US EPA:

Associate Director
Office of Enforcement and Permits Review (3AP12)
U. S. Environmental Protection Agency
Region III
1650 Arch Street
Philadelphia, PA 19103-2029

3.5.4. **Certified emissions statement.** The permittee shall submit a certified emissions statement and pay fees on an annual basis in accordance with the submittal requirements of the Division of Air Quality.
[45CSR§30-8.]

3.5.5. **Compliance certification.** The permittee shall certify compliance with the conditions of this permit on the forms provided by the DAQ. In addition to the annual compliance certification, the permittee may be required to submit certifications more frequently under an applicable requirement of this permit. The annual certification shall be submitted to the DAQ and USEPA on or before March 15 of each year, and shall certify compliance for the period ending December 31. The permittee shall maintain a copy of the certification on site for five (5) years from submittal of the certification.
[45CSR§30-5.3.e.]

3.5.6. **Semi-annual monitoring reports.** The permittee shall submit reports of any required monitoring on or before September 15 for the reporting period January 1 to June 30 and on or before March 15 for the reporting period July 1 to December 31. All instances of deviation from permit requirements must be clearly identified in such reports. All required reports must be certified by a responsible official consistent with 45CSR§30-4.4.
[45CSR§30-5.1.c.3.A.]

3.5.7. **Emergencies.** For reporting emergency situations, refer to Section 2.17 of this permit.

3.5.8. **Deviations.**

a. In addition to monitoring reports required by this permit, the permittee shall promptly submit supplemental reports and notices in accordance with the following:

1. Any deviation resulting from an emergency or upset condition, as defined in 45CSR§30-5.7., shall be reported by telephone or telefax within one (1) working day of the date on which the permittee becomes aware of the deviation, if the permittee desires to assert the affirmative defense in accordance with 45CSR§30-5.7. A written report of such deviation, which shall include the probable cause of such deviations, and any corrective actions or preventative measures taken, shall be submitted and certified by a responsible official within ten (10) days of the deviation.

2. Any deviation that poses an imminent and substantial danger to public health, safety, or the environment shall be reported to the Secretary immediately by telephone or telefax. A written report of such deviation, which shall include the probable cause of such deviation, and any corrective actions or preventative measures taken, shall be submitted by the responsible official within ten (10) days of the deviation.

3. Deviations for which more frequent reporting is required under this permit shall be reported on the more frequent basis.

4. All reports of deviations shall identify the probable cause of the deviation and any corrective actions or preventative measures taken.

[45CSR§30-5.1.c.3.C.]

b. The permittee shall, in the reporting of deviations from permit requirements, including those attributable to upset conditions as defined in this permit, report the probable cause of such deviations and any corrective actions or preventive measures taken in accordance with any rules of the Secretary.
[45CSR§30-5.1.c.3.B.]

3.5.9. **New applicable requirements.** If any applicable requirement is promulgated during the term of this permit, the permittee will meet such requirements on a timely basis, or in accordance with a more detailed schedule if required by the applicable requirement.
[45CSR§30-4.3.h.1.B.]

A. Air Toxic Pollutants

3.5.10. The emission to the air of any toxic air pollutant resulting from an abnormal release or spill in excess of the following amounts shall be reported to the Director or his authorized representative not later than 24-hours after the chemical processing unit owner/operator has knowledge of such emission:

a. For ethylene oxide, and vinyl chloride, one (1) pound

b. For acrylonitrile and butadiene, ten (10) pounds

c. For all other toxic air pollutants, fifty (50) pounds.

The owner or operator shall file a written report with the Director stating the details of all such incidents resulting in the emission of more than fifty (50) pounds of any toxic air pollutant within seven (7) days of the occurrence. The owner/operator shall submit to the Director, at his request, records of all abnormal toxic air pollutant discharges to the air.

[45CSR§27-10.4., ~~45CSR13, R13-2274D, B.1.&B.6.,~~ Group 001, 002, 003, 005, 006, 007, 008, 009, 00A, ~~00B~~, 00C, 00D, and 00E]

3.5.11. Any period of failure or inoperability of air pollution control equipment required by 45CSR27 shall be reported to the Director not later than 24-hours after the owner/operator has knowledge of such failure. Such reports shall be made in conjunction with necessary requests for variances as provided under 45CSR§27-12. **[45CSR§27-10.5., ~~45CSR13, R13-2274D, B.1.,~~ Group 001, 002, 003, 005, 006, 007, 008, 009, 00A, ~~00B~~, 00C, 00D, and 00E]**

3.6. Compliance Plan

3.6.1. None

3.7. Permit Shield

3.7.1. The permittee is hereby granted a permit shield in accordance with 45CSR§30-5.6. The permit shield applies provided the permittee operates in accordance with the information contained within this permit.

3.7.2. The following requirements specifically identified are not applicable to the source based on the determinations set forth below. The permit shield shall apply to the following requirements provided the conditions of the determinations are met.

45CSR33 ~~**(06/01/2000)**~~	Acid Rain Provisions and Permits do not apply to Koppers Inc. Follansbee Tar Plant because it is not considered a Title IV (Acid Rain) Source.
40 C.F.R. Part 60 Subpart Dc ~~**(06/09/89)**~~	National Standards of Performance for Small Industrial, Commercial, Institutional Steam Generating Units does not apply to Koppers Inc. Follansbee Tar Plant because KI installed or modified the 75 MMBtu/hr Boiler (#3) before July 9, 1989.
~~**40 C.F.R. Part 60 Subpart Kb 07/23/84**~~	~~**Standards of Performance for Volatile Organic Liquid Storage Vessels (Including Petroleum Liquid Storage Vessels) does not apply to Koppers Inc. Follansbee Tar Plant because the maximum true vapor pressure for the tanks (Tanks 48 and 49) with capacity greater than or equal to 151 m^3 (39,890 gallons) that were built after July 23, 1984 is less than 0.508 pounds per square inch.**~~
40 C.F.R. Part 60 Subpart VV ~~**(01/05/81)**~~	National Standards of Performance for Equipment Leaks of VOC in the Synthetic Organic Chemicals Manufacturing Industry does not apply to Koppers Inc. Follansbee Tar Plant because the facility was constructed prior to January 5, 1981.
40 C.F.R. Part 60 Subpart DDD ~~**(08/30/87) or (01/10/89)**~~	Standards of Performance for Volatile Organic Compound (VOC) Emissions from the Polymer Manufacturing Industry does not apply to Koppers Inc. Follansbee Tar Plant because the facility is not polymer industries.

40 C.F.R. Part 60 Subpart NNN ~~(12/30/83)~~	Standards of Performance for Volatile Organic Compound (VOC) Emissions From Synthetic Organic Chemical Manufacturing Industry (SOCMI) Distillation Operations do not apply to Koppers because all distillation units except the Debenzolizer were constructed after December 1983. The Debenzolizer does not produce any chemicals listed in the rule. It produces concentrated solvent (55% benzene, but different CAS) number and benzene free chemical oil.
40 C.F.R. Part 60 Subpart RRR ~~(06/29/90)~~	National Standards of Performance for Volatile Organic Compounds (VOC) Emissions from Synthetic Organic Chemicals Manufacturing Industry (SOCMI) Reactor Processes does not apply to Koppers Inc. Follansbee Tar Plant because they do not operate reactors (defined as units in which one or more chemicals or reactants other than air are combined or decomposed in such a way that their molecular structures are altered and one or more new organic compounds are formed). Furthermore, they do not produce any chemicals listed in 60.707 except naphthalene, which was constructed prior to June 29, 1990.
40 C.F.R. Part 61 Subpart L ~~(06/06/84)~~	National Emission Standards for Equipment Leaks (Fugitive Emission Sources) of Benzene is not applicable to Koppers Inc. Follansbee Tar Plant since the facility does not operate a coke by-product recovery plant.
40 C.F.R. Part 61 Subpart Y ~~(09/14/89)~~	National Emission Standards for Benzene Emissions from Benzene Storage Vessels is not applied to Koppers Inc. Follansbee Tar Plant because they do not store benzene within the specific gravity range. (Note benzene is not defined so it is assumed to be benzene with CAS No.71-43-2).
40 C.F.R. Part 61 Subpart BB ~~(03/07/90)~~	National Emission Standards for Benzene Emissions from Benzene Transfer Operations because they do not transfer benzene. (Note benzene is not defined so it is assumed to be benzene with CAS No.71-43-2).
40 C.F.R. Part 63 Subpart Y ~~(09/19/95)~~	National Emission Standards for Hazardous Air Pollutants for Marine Tank Vessel Loading Operations does not apply to Koppers Inc. Follansbee Tar Plant because its loading facilities are not an affected source.
40 C.F.R. Part 63 Subpart EEEE ~~(02/03/04)~~	National Emission Standards for Hazardous Air Pollutants: Organic Liquids Distribution (OLD) does not apply to Koppers Inc. Follansbee Tar Plant because its transfer racks and storage tanks do not exceed liquid pressure over 0.1 psia.
40 C.F.R. Part 63 Subpart FFFF	**National Emission Standards for Hazardous Air Pollutants for Miscellaneous Organic Chemical Production and Processes (MON). Koppers is implementing plant wide leak detection and repair (LDAR) program, installing a thermal oxidizer, and modifying the vent and vapor streams from the processes to two flares or thermal oxidizer to reduce their HAPs. Thus, Koppers Inc. Follansbee Tar Plant is not subject to this rule.**
40 C.F.R. Part 63 Subpart DDDDD	**National Emission Standards for Hazardous Air Pollutants for Industrial, Commerical, or Institutional Boilers and Process Heaters. This MACT has been vacated and remanded by the United States Court of Appeals for the District of Columbia Circuit on July 30, 2007.**

40 C.F.R. Part 64	**The Koppers Inc. Follansbee Tar Plant's (1) Creosote Tanks (Pollutant Specific Emission Unit (PSEU)) are not subject to the Compliance Assurance Monitoring (CAM) rule because they are subject to a 40 C.F.R. Part 63 Subpart MMM that was proposed after November 11, 1990. (2) The Pencil Pitch Dryer (008-02) (PSEU) is not subject to CAM since Koppers Inc. did not submit any changes associated the significant modification for this PSEU. (3) The #32 Column, Naphthalene Loading (LR 2-2), and Naphthalene Storage (83, 623, 3N) are subject to 40 C.F.R. Part 63 Subparts F, G, and H (HON – MACT). This equipment was found to be Group 2 sources that do not require a control device. For Group 2 sources, the HON-MACT only requires recordkeeping and reporting. The HON - MACT does not have emission limitations or standards. CAM will be addressed at renewal for the HON-MACT facilities and Pencil Pitch Dryer.**
40 C.F.R. Part 72 ~~**(01/11/93)**~~	Acid Rain Program General Provisions does not apply to Koppers Inc. Follansbee Tar Plant because it is not considered a Title IV (Acid Rain) Source.

4.0. Source-Specific Requirements [Boiler #2 (992 ~~001-01~~), Boiler #3 (993 ~~001-02~~), and Boiler #5 (995 ~~001-04~~) of source Group 001 and emission point ID(s) (~~Stack~~ 992, ~~Stack~~ 993, ~~Stack~~ 995)]

4.1. Limitations and Standards

4.1.1. **Boiler #5 shall fire** only ~~Combustion~~ natural gas or ~~of~~ fuel oil **with a** sulfur **content** of 1-% or less. ~~Combustion of coal not allowed.~~
[45CSR13, R13-2274, 4.1.27., (995) ~~001-04 R13-0167 Special Condition, (Boiler #5)~~]

4.1.2. **Emissions from the combined boilers** ~~Maximum emissions to the atmosphere from Boiler #3~~ shall not exceed the **following:** ~~limits set below:~~

Pollutant	Maximum Hourly Emissions (lb/hr)	Maximum Annual Emissions (tons/year)
Particulate Matter	**11.93** ~~6.30~~	**38.24** ~~15.53~~
~~PM-10~~	~~5.53~~	~~13.64~~
Nitrogen Oxides	**73.8** ~~30.11~~	**246.4** ~~74.25~~
Sulfur Dioxide	**35.89** ~~21.49~~	**109.4** ~~52.99~~
Carbon Monoxide	**19.2** ~~6.30~~	**84.15** ~~27.60~~
Volatile Organic Compounds	**1.24** ~~0.42~~	**5.43** ~~1.81~~
Hexane	**0.38**	**1.64**
Total Hazardous Air Pollutants	**0.52** ~~0.28~~	**2.09** ~~0.93~~

Compliance for 45CSR§§2-4.1. and 4.1.b (particulate matter emissions) and 45CSR§§10-3.1. and 3.1.e (sulfur dioxide emissions) will be shown by the more stringent requirement in this section.

[45CSR§§2-4.1. and 4.1.b., 45CSR§§10-3.1. and 3.1.e., 45CSR13, R13-2274~~D~~, 4.1.7., 4.1.8. ~~A.8., 001-02 (Boiler #3)~~]

4.1.3. Maximum fuel consumption rate of Boiler #3 shall not exceed the rate represented in the following formula:

$$123\cancel{00}y + 63\cancel{55}x = 148{,}500$$

where: y = Annual natural gas consumption (MMcf/yr)
x = Annual solvent consumption (Mgal/yr)
148,500 = Maximum NOx emissions (lb/yr)

[45CSR13, R13-2274~~D~~, 4.1.13. ~~A.9.~~, 993 ~~001-02~~ (Boiler #3)]]

4.1.4. The annual throughput of natural gas to Boiler #3, shall not exceed 657 MMcf/yr. Compliance with the natural gas throughput limit shall be determined using a rolling yearly total. A rolling yearly total shall mean the sum of the throughput at any given time for the previous twelve (12) consecutive months.
[45CSR13, R13-2274~~D~~, 4.1.13. ~~A.9.~~, 993 ~~001-02~~ (Boiler #3)]

4.1.5. The annual throughput of "liquid fuel" to Boiler #3, shall not exceed 2,357,143 ~~.7 MM~~gal/yr. Compliance with the **"liquid fuel"** ~~solvent~~ throughput limit shall be determined using a rolling yearly total. A rolling yearly total shall mean the sum of the throughput at any given time for the previous twelve (12) consecutive months.
[45CSR13, R13-2274~~D~~, 4.1.13. ~~A.9~~., 993 ~~001-02~~ (Boiler #3)]

4.1.6. The "liquid fuel" consumed in Boiler #3, Sections 4.1.4 and 4.1.5, shall be defined as:

(a) Debenzolizer Overhead, which is a benzene-rich light oil that is removed from refined chemical oil by the Debenzolizer. This material is pumped directly from the Debenzolizer Unit (Group 003) to Tank 11 ~~(00B-29)~~ for boiler consumption, and

(b) LB Unwashed Solvent. This product is pumped from solvent storage to Tank 11~~(00B-29)~~ as it is produced.

(c) The combination of these two (2) products accounts for 100% of the "liquid fuel" that is consumed by Boiler #3.

[45CSR30-12.7. ~~45CSR13, R13-2274D, A.10., 001-02 (Boiler #3)~~]

~~**4.1.7. The permitted facility shall be constructed and operated in accordance with information filed in Permit Application R13-2274, R13-2274A, R13-2274B, R13-2274C, R13-2274D and any amendments thereto. The Director may suspend or revoke a permit if the plans and specifications upon which the approval was based are not adhered to.**~~
~~**[45CSR13, R13-2274D, C.3., 001-02 (Boiler #3)]**~~

4.1.7~~8~~. No person shall cause, suffer, allow, or permit emission of smoke and/or particulate matter into the open air from any fuel burning unit which is greater than ten (10) percent opacity based on a six minute block average. **[45CSR§2-3.1.~~, 45CSR13, R13-2274D, B.1.&B.2.~~]**

~~**4.1.9. No person shall cause, suffer, allow or permit the discharge of particulate matter into the open air from all fuel burning units located at one plant, measured in terms of pounds per hour in excess of the amount determined as follows:**~~

~~**b. For Type 'b' fuel burning units, the product of 0.09 and the total design heat inputs for such units in million B.T.U.'s per hour, provided however that no more than six hundred (600) pounds per hour of particulate matter shall be discharged into the open air from all such units.**~~

~~**Boiler Unit Number**~~	~~**Allowable Limits**~~
	~~**lb/hr**~~
~~**2**~~	~~**4.50**~~
~~**3**~~	~~**6.75**~~
~~**5**~~	~~**11.88**~~

~~**Compliance for Boiler #3 for particulate matter emissions will be shown by the more stringent requirement in Section 4.1.2.**~~

~~**[45CSR§§2-4.1. and 4.1.b., 45CSR13, R13-2274D, B.1.]**~~

4.1.8~~10~~. Compliance with the particulate matter stack emissions in Section 4.1.2~~0~~ for Boilers #2 and #5 shall be shown by demonstrating the use of liquid solvent or natural gas instead of solid fuels.
[45CSR§30-5.1.c, (992 and 995) ~~001-01 and 001-04~~]

4.1.9~~11~~. The visible emission standards set forth in 45CSR§2-3 shall apply at all times except in periods of start-ups, shutdowns and malfunctions. Where the Director believes that start-ups and shutdowns are excessive in duration and/or frequency, the Director may require an owner or operator to provide a written report demonstrating that such frequent start-ups and shutdowns are necessary.
[45CSR§2-9.1.~~, 45CSR13, R13-2274D, B.1~~]

4.1.10~~2~~. At all times, including periods of start-ups, shutdowns and malfunctions, owners and operators shall, to the extent practicable, maintain and operate any fuel burning unit(s) including associated air pollution control equipment in a manner consistent with good air pollution control practice for minimizing emissions. Determination of whether acceptable operating and maintenance procedures are being used will be based on information available to the Director which may include, but is not limited to, monitoring results, visible emission observations, review of operating and maintenance procedures and inspection of the source.
[45CSR§2-9.2.~~, 45CSR13, R13-2274D, B.1~~]

4.1.11~~3~~. The owner or operator of a fuel burning unit(s) subject to 45CSR2 shall report to the Director any malfunction of such unit or its air pollution control equipment which results in any excess particulate matter emission rate or excess opacity (i.e., emissions exceeding the standards in 45CSR§§2-3 and 4) as provided in one of the following subdivisions:

a. Excess opacity periods meeting the following conditions may be reported on a quarterly basis unless otherwise required by the Director:

a.1. The excess opacity period does not exceed thirty (30) minutes within any 24-hour period; and

a.2. Excess opacity does not exceed 40%.

b. The owner or operator shall report to the Director any malfunction resulting in excess particulate matter or excess opacity, not meeting the criteria set forth in Section 4.1.12. a~~14~~ [45CSR§2-9.3.a], by telephone, telefax, or e-mail by the end of the next business day after becoming aware of such condition. The owner or operator shall file a certified written report concerning the malfunction with the Director within thirty (30) days providing the following information:

b.1. A detailed explanation of the factors involved or causes of the malfunction;

b.2. The date and time of duration (with starting and ending times) of the period of excess emissions;

b.3. An estimate of the mass of excess emissions discharged during the malfunction period;

b.4. The maximum opacity measured or observed during the malfunction;

b.5. Immediate remedial actions taken at the time of the malfunction to correct or mitigate the effects of the malfunction; and

b.6. A detailed explanation of the corrective measures or program that will be implemented to prevent a recurrence of the malfunction and a schedule for such implementation.

[45CSR§2-9.3.~~, 45CSR13, R13-2274D, B.1~~.]

4.1.12~~4~~. In the event of an unavoidable shortage of fuel having characteristics or specifications necessary for a fuel burning unit to comply with the visible emission standards set forth in 45CSR§2-3 or any emergency situation or condition creating a threat to public safety or welfare, the Director may grant an exception to the otherwise applicable visible emission standards for a period not to exceed fifteen (15) days, provided that visible emissions during the exception period do not exceed a maximum six (6) minute average of thirty (30) percent and that a reasonable demonstration is made by the owner or operator that the emission standards under 45CSR§2-4 will not be exceeded during the exemption period.
[45CSR§2-10.1.~~, R13-2274D, B.1.&B.2~~.]

4.1.13~~5~~. No person shall cause, suffer, allow or permit the discharge of sulfur dioxide into the open air from all stacks located at one plant, measured in terms of pounds per hour, in excess of the amount determined as follows:

d. For Type 'b' and Type 'c' fuel burning units, the product of 3.1 and the total design heat inputs for such units discharging through those stacks in million BTU's per hour.

~~Boiler Unit Number~~	~~Allowable Limits~~ ~~lb/hr~~
~~2~~	~~155.0~~
~~3~~	~~232.5~~
~~5~~	~~409.2~~

~~For Boiler #3,~~ Ccompliance for sulfur dioxide emissions will be shown by the more stringent requirements in Sections 4.1.2.

[45CSR§§10-3.1. and 3.1.e., 45CSR13, R13-2274D, B.1.&B.3.]

4.1. 14~~6~~.Compliance with the sulfur dioxide stack emissions in Section 4.1.2~~16~~ for Boilers #2 and #5 shall be shown by demonstrating the use liquid solvent or natural gas instead of solid fuels.
[45CSR§30-5.1.c., (992 and 995) ~~001-01 and 001-04~~]

4.1.15~~7~~. Unless otherwise approved by the Director, the maximum allowable emission rate for an individual stack shall not exceed by more than twenty-five percent (25%) the emission rate determined by prorating the total emission rate specified in Section 4.1.13~~5~~ [45CSR§10-3.1], ~~Section 4.2.1 [~~45CSR§10-3.2~~]~~, or 45CSR§10-3.3, on the basis of individual unit heat input at design capacity for all fuel burning units discharging through that stack.
[45CSR§§10-3.4. and 3.4.a.~~, 45CSR13, R13-2274D, B.1.&B.3~~.]

4.1.16~~8~~. Due to unavoidable malfunction of equipment or inadvertent fuel shortages, emissions exceeding those provided for in 45CSR10 may be permitted by the Director for periods not to exceed ten (10) days upon specific application to the Director. Such application shall be made within twenty-four (24) hours of the equipment malfunction or fuel shortage. In cases of major equipment failure or extended shortages of conforming fuels, additional time periods may be granted by the Director provided a corrective program has been submitted by the owner or operator and approved by the Director.
[45CSR§10-9.1.~~, 45CSR13, R13-2274D, B.1~~.]

~~**4.1.19. The maximum hourly and annual benzene emissions from Boiler 2 (992), Boiler 3 (993), and Boiler 5 (995) shall not exceed:**~~

~~Emission Source~~	~~Emission Point ID#~~	~~Benzene Emission Control Plan~~	~~Hourly Benzene Emissions (lb/hr)~~	~~Annual Benzene Emissions (lb/yr)~~
~~Boiler 2~~	~~992~~	~~None~~	~~0.00008~~	~~0.7~~
~~Boiler 3~~	~~993~~	~~None~~	~~0.00016~~	~~1.4~~
~~Boiler 5~~	~~995~~	~~None~~	~~0.00028~~	~~2.4~~

~~**[45CSR13, R13-2274D, A.1., Boiler Numbers 2, 3 and 5]**~~

4.2. Monitoring Requirements

4.2.1. **The permittee shall perform the sampling as required by the alternate fuel sampling plan, submitted in 2002 to the WVDEP. The plan requires the liquid fuel to be analyzed quarterly for ash, moisture, total sulfur and higher heating value.**
[45CSR13, R13-2274, 4.2.5.]
~~**Except during startup and shutdown, opacity from Boiler #3 shall not exceed 10 percent based on a six minute block average. In order to determine compliance with this limit the permittee shall conduct monthly visual emission observations in accordance with Method 22 of 40 CFR 60, Appendix A for Boiler #3. These observations shall be conducted during periods of normal facility operation for a sufficient time interval to determine if the unit has visible emissions using procedures outlined in 40CFR60 Appendix A, Method 22. If sources of visible emissions are identified during the survey, the permittee shall conduct an opacity evaluation in accordance with 40CFR60 Appendix A, Method 9, within 24 hours. A 40CFR60 Appendix A, Method 9 evaluation shall not be required if the visible emission condition is corrected within 24 hours and the units are operated at normal operating conditions with no visible emissions being observed.**~~
~~**[45CSR13, R13-2274D45CSR§2-3.2., A.15., 001-02 (Boiler #3)]**~~

4.2**4**.2**1**. To determine compliance with Sections 4.1.1~~2~~ through 4.1.5, the permittee shall keep records of the fuel type and fuel usage for Boilers #2, #3 and #5 on a monthly basis at the facility. ~~**These records shall be maintained on site for a period of no less than five (5) years and certified records by a responsible official shall be made available to the Director or a duly authorized representative of the Director upon request**~~.
[45CSR13, R13-2274~~D~~, 4.2.1.5. ~~B.11. i.~~, (993 and 995) ~~001-02 (Boiler #3)~~]

4.3. Testing Requirements

4.3.1. At such reasonable times as the Director may designate, the owner or operator of any fuel burning unit(s) may be required to conduct or have conducted tests to determine the compliance of such unit(s) with the emission limitations of 45CSR§2-4. Such tests shall be conducted in accordance with the appropriate method set forth in the Appendix to 45CSR2 or other equivalent EPA approved method approved by the Director. The Director, or his duly authorized representative, may at his option witness or conduct such tests. Should the Director exercise his option to conduct such tests, the operator will provide all necessary sampling connections and sampling ports located in such manner as the Director may require, power for test equipment, and the required safety equipment such as scaffolding, railings and ladders to comply with generally accepted good safety practices.

1. Sufficient information on temperatures, velocities, pressures, weights and dimensional values shall be reported to the Director, with such necessary commentary as he may require to allow an accurate evaluation of the reported test results and the conditions under which they were obtained.

[45CSR§§2-8.1.b. and b.1.]

4.4. Recordkeeping Requirements

4.4.1~~2~~. **The permittee shall calculate actual emissions from the plant on a monthly basis and calculate annual emissions on a 12-month rolling average. Actual emissions shall be calculated using recordkeeping data, test results, AP-42 emission factors or other engineering methods. The following records shall be maintained on a monthly basis:**

1. Fuel consumption of the boilers.

2. Operating hours of the boilers.

~~**To determine continual compliance with the emission limits set forth under Section 4.1.2, the permittee shall record for Boiler #3 the daily and monthly hours of operation, the daily and monthly fuel usage by fuel type, and shall compile twelve (12) month rolling totals for hours of operation, and fuel usage**~~

~~by fuel type for Boiler #3. These records shall be maintained on site for a period of not less than five (5) years and certified records by a responsible official shall be made available to the Director or a duly authorized representative of the Director upon request~~.
[45CSR13, R13-2274~~D~~, 4.4.5.1. and 4.4.5.2. ~~B.12., 001-02 (Boiler #3)~~]

4.4.2~~3~~. The owner or operator shall maintain records of the operating schedule and the quantity and quality of fuel consumed in each fuel burning unit in a manner to be established by the Director. Such records are to be maintained on-site and made available to the Director or his duly authorized representative upon request.
[45CSR§2-8.3.c.]

4.4.3~~4~~. Where appropriate the owner or operator of a fuel burning unit(s) may maintain such records in electronic form.
[45CSR§2-8.3.d.]

4.4.4~~5~~. Records shall be maintained on site reporting the results of each test and monthly visual/visible observation or opacity evaluation if required.
~~**[45CSR13, R13-2274D, A.15., 001-02 (Boiler #3)]**~~
[45CSR§30-5.1.c.~~, 001-01 (Boilers #2) and 001-04 (Boiler #5)~~]

4.4.5~~6.~~ The owner or operator of fuel burning unit(s), manufacturing process source(s) or combustion source(s) subject to 45CSR§§10-3, 4 or 5 (Section~~s~~ 4.1.13~~6 and 4.1.17~~) shall maintain on-site a record of all required monitoring data as established in a monitoring plan (Appendix A) pursuant to 45CSR§10-8.2.c. Such records shall be made available to the Director or his duly authorized representative upon request. Such records shall be retained on-site for a minimum of five years.
[45CSR§10-8.3.a, (992 and 993) ~~001-01 (Boilers #2) and 001-02 (Boiler #3)~~]

4.4.6~~7~~. The owner or operator of a fuel burning unit(s) or a combustion source(s) shall maintain records of the operating schedule and the quantity and quality of fuel consumed in each unit in a manner specified by the Director. Such records are to be maintained on-site and made available to the Director or his duly authorized representative upon request.
[45CSR§10-8.3.c, (992 and 993) ~~001-01 (Boilers #2) and 001-02 (Boiler #3)~~]

4.4.7. The permittee shall keep records of all required monitoring data established in the alternate fuel sampling plan that was submitted in 2002 to the WVDEP.
[45CSR§30-5.1.c.]

4.5. Reporting Requirements

4.5.1. ***Reserved***

~~**Upon observing any visible emissions in excess of twenty percent (20%) opacity, or excess of forty (40%) for any period or periods aggregating more than five (5) minutes in any sixty (60) minute period, the Company shall submit a written report, certified by a responsible official, to the Director of the Division of Air Quality within five (5) days after taking said reading.**~~
~~**[45CSR13, R13-2274D, A.15., 001-02 (Boiler #3)]**~~

5.0 Source-Specific Requirements [Tar Distillation (881, 882, 884, VT01, VT02, VT03, VT04, VT05, VT63, VT64, VT65, VTMP VT04, VT05 ~~002-01, 002-02, 002-03,002-06, 002-07, 002-08, 002-09, 002-0A~~,) of source Group 002 and emission point ID(s) (778~~31~~, 774a, 881, 882, 884 ~~Stack Stack Stack Stack Stack~~) and Group 00G (Slop Conveying and Recycling)]

5.1. Limitations and Standards

5.1.1. No person shall cause, suffer, allow or permit the discharge of sulfur dioxide into the open air from all stacks located at one plant, measured in terms of pounds per hour, in excess of the amount determined as follows:

e. For Type 'b' and Type 'c' fuel burning units, the product of 3.1 and the total design heat inputs for such units discharging through those stacks in million BTU's per hour.

~~Tube Heater Number~~	~~Stack Numbers~~	~~Allowable Limits~~ ~~lb/hr~~
~~1~~	~~881~~	~~31~~
~~2~~	~~882~~	~~31~~
~~4~~	~~884~~	~~31~~

Compliance for particulate matter emissions will be shown by the more stringent requirement in Section 3.1.27.

[45CSR§§10-3.1. and 3.1.e., 45CSR13, R13-2274D, B.1., Tube Heaters #1 (881 ~~002-01~~), #2 (882 ~~002-02~~), and #4 (884 ~~002-03~~)]

5.1.2. Compliance with the sulfur dioxide stack emissions in Section ~~5.1.1 and~~ 3.1.27 for Tube Heaters #1, #2 and #4 shall be shown by demonstrating the use natural gas instead of solid fuels.
[45CSR§30-5.1.c., Tube Heaters #1 (881 ~~002-01~~), #2 (882 ~~002-02~~), and #4 (884 ~~002-03~~)]

5.1.3. No person shall cause, suffer, allow, or permit emission of smoke and/or particulate matter into the open air from any fuel burning unit which is greater than ten (10) percent opacity based on a six minute block average.
[45CSR§2-3.1., ~~45CSR13, R13-2274D, B.1.,~~ Tube Heaters #1 (881 ~~002-01~~), #2 (882 ~~002-02~~), and #4 (884 ~~002-03~~)]

~~5.1.4. No person shall cause, suffer, allow or permit the discharge of particulate matter into the open air from all fuel burning units located at one plant, measured in terms of pounds per hour in excess of the amount determined as follows:~~

~~b. For Type 'b' fuel burning units, the product of 0.09 and the total design heat inputs for such units in million B.T.U.'s per hour, provided however that no more than six hundred (600) pounds per hour of particulate matter shall be discharged into the open air from all such units.~~

~~Tube Heater Number~~	~~Stack Numbers~~	~~Allowable Limits~~ ~~lb/hr~~
~~1~~	~~881~~	~~0.90~~
~~2~~	~~882~~	~~0.90~~
~~4~~	~~884~~	~~0.90~~

~~[45CSR§§2-4.1. and 4.1.b., 45CSR13, R13-2274D, B.1., Tube Heaters #1 (002-01), #2 (002-02), and #4 (002-03)]~~

5.1.4~~5~~. Compliance with the particulate matter stack emissions in Section ~~5.1.4~~ 3.1.27 for Tube Heaters #1, #2 and #4 shall be shown by demonstrating the use of natural gas instead of solid fuels.
[45CSR§30-5.1.c., Tube Heaters #1 (881 ~~002-01~~), #2 (882 ~~002-02~~), and #4 (884 ~~002-03~~)]

5.1.5~~6~~. For malfunctions of the Tube Heaters #1, #2, and #4, see Sections 4.1.9~~11~~ and 4.1.11~~3~~.

5.1.6~~7~~. For unavoidable fuel shortages for the Tube Heaters #1, #2, and #4, see Section 4.1.12~~4~~.

5.1.7~~8~~. **The following source must be controlled by either the Thermal Oxidizer (778) or by Flare (774a) at all times: #1 Column (VT01), #2 Column (VT03), #4 Column (VT04), #4 Pitch Flash Column (VT05), Decanter 63 (VT63), 64 (VT64) and 65 (VT65), and Melt Pot (VTMP).**
[45CSR13, R13-2274, 4.1.1.]

~~**The maximum hourly and annual benzene emissions from #1 Column (VT01), #2 Column and #4 Column (VT24), decanter's, #1 Tube Heater (881), #2 Tube Heater (882), #4 Tube Heater (884), and melt pot.**~~

~~Emission Source~~	~~Emission Point ID#~~	~~Benzene Emission Control Plan~~	~~Hourly Benzene Emissions (lb/hr)~~	~~Emissions Annual Benzene Emissions (lb/yr)~~
~~#1 Column~~	~~831/774~~	~~#31 Tube Heater/Flare~~	~~0.00634~~	~~55.5~~
~~#2/#4 Column~~	~~831/774~~	~~#31 Tube Heater/Flare~~	~~0.00634~~	~~55.5~~
~~#1 Tube Heater~~	~~881~~	~~None~~	~~0.00002~~	~~0.2~~
~~#2 Tube Heater~~	~~882~~	~~None~~	~~0.00002~~	~~0.2~~
~~#4 Tube Heater~~	~~884~~	~~None~~	~~0.00002~~	~~0.2~~
~~Decanter's~~	~~831/774~~	~~#31 Tube Heater/Flare~~	~~0.00132~~	~~11.6~~
~~Melt Pot~~	~~831/774~~	~~#31 Tube Heater/Flare~~	~~0.079~~	~~7.16~~

~~**[45CSR13, R13-2274D, A.1.]**~~

5.1. 8~~9~~. ~~**Emissions from the 15,000 gallon horizontal melt pot shall be fed to the #31 Tube Heater at all times, except during the introduction of solid materials through the hatch.**~~ The hatch of the 15,000 gallon horizontal melt pot must be kept in the closed position at all times except during the introduction of solid materials through the hatch.
[45CSR13, R13-2274~~D~~, 4.1.15. ~~A.12.~~, Melt Pot (VTMP ~~002-0A~~)]

~~**5.1.10. Materials processed through the 15,000 gallon horizontal melt pot shall consist of liquid or solid materials which are the result of quality control sampling, product returns, spilled materials, process upsets, and/or vessel cleaning.**~~
~~**[45CSR13, R13-2274D, A.13., Melt Pot (002-0A)]**~~

5.1.9~~11~~. Maximum liquid throughput to the 15,000 gallon horizontal melt pot shall not exceed 1,000,000 gal/year and maximum solid throughput to the 15,000 gallon horizontal melt pot shall not exceed 5,000 tons/year.
[45CSR13, R13-2274~~D~~, 4.1.14. ~~A.14.~~, Melt Pot (VTMP ~~002-0A~~)]

5.2. Monitoring Requirements

5.2.1. **To determine compliance with Section 5.1.8 and 5.1.9, the permittee shall keep monthly records of the total liquid and solid throughput to the 15,000 gallon horizontal melt pot (VTMP). [45CSR13, R13-2274, 4.2.1.6.]**
~~**No additional requirements.**~~

5.3. Testing Requirements

5.3.1. No additional requirements.

5.4. Recordkeeping Requirements

5.4.1. **The permittee shall calculate actual emissions from the plant on a monthly basis and calculate annual emissions on a 12-month rolling average. Actual emissions shall be calculated using recordkeeping data, test results, AP-42 emission factors or other engineering methods. The following records shall be maintained on a monthly basis:**

1. Fuel consumption of the process heaters (Tube Heaters #1 (881), #2 (882), and #4 (884).

2. Operating hours of the process vents (#1 Column (VT01), #2 Column (VT03), #4 Column (VT04), #4 Pitch Flash Column (VT05).

3. Melt pot (VTMP) throughput.

4. Slop throughput to slop conveyor.

~~**To determine compliance with Sections 5.1.9 through 5.1.11, the permittee shall keep monthly records of the total liquid and solid throughput to the 15,000 gallon horizontal melt pot at the facility. These records shall be maintained on site for a period of no less than five (5) years and certified records by a responsible official shall be made available to the Director or a duly authorized representative of the Director upon request.**~~
[45CSR13, R13-2274~~D~~, 4.4.5.1., 4.4.5.2., 4.4.5.5., 4.4.5.8.], ~~B.11. j., Melt Pot (002-0A)~~]

5.5. Reporting Requirements

5.5.1. No additional requirements.

6.0. Source-Specific Requirements [Debenzolizer Unit (VTDB) ~~(003-01)~~ of source Group 003 ~~and Acid Washers of source Group 004~~ and emission point ID(s) (778~~31~~ or 774a ~~Stack~~)]

6.1. Limitations and Standards

6.1.1. Emissions from the Debenzolizer Vent (VTDB ~~C-100~~) must be controlled by either the Thermal Oxidizer (778) or by Flares (774a) at all times ~~shall be fed to Tube Heater~~.
[45CSR13, R13-2274~~D~~, 4.1.1. ~~A.2., #31 Tube Heater (Stack 831)~~]

6.2. Monitoring Requirements

6.2~~4~~.1. On a monthly basis, the permittee shall keep **records of** the average feed rate of Refined Chemical Oil (RCO) to the Debenzolizer Unit (VTDB).
[45CSR13, R13-2274~~D~~, 4.2.1.4. ~~B.,11.d.~~, (VTDB) ~~003-01~~]
~~No additional requirements.~~

6.3. Testing Requirements

6.3.1. No additional requirements.

6.4. Recordkeeping Requirements

6.4.1. **The permittee shall calculate actual emissions from the plant on a monthly basis and calculate annual emissions on a 12-month rolling average. Actual emissions shall be calculated using recordkeeping data, test results, AP-42 emission factors or other engineering methods. The following records shall be maintained on a monthly basis:**

1. Operating hours of the process vents [Debenzolizer Unit (003-01)].

[45CSR13, R13-2274, 4.4.5.2.]

6.5. Reporting Requirements

6.5.1. No additional requirements.

7.0. Source-Specific Requirements [Naphthalene Distillation Unit (NDU) Solvent Column #32 (VT32 ~~005-04~~), Naphthalene Column #31 (VT31 ~~005-04~~), #31 Tube Heater (831 ~~005-05~~) of source Group 005~~, Controls: and Flare (Back-up Control) (005-06) and~~ Base Plant (BW02 and BW03) of source Group 006 and emission point ID(s) (778~~31~~, and 774a ~~Stack Stack~~ for Group 005) and (BW02 and BW03 for Group 006)]

7.1. Limitations and Standards

~~**7.1.1. Tube Heater #31 shall maintain a minimum operational temperature of 1400 °F and a minimum destruction efficiency of 98%.**~~
~~**[45CSR13, R13-2274D, A.2., 005-05 (#31 Tube Heater)]**~~

~~**7.1.2. The temperature in Tube Heater #31 (005-05) must be recorded on a continuous basis when in use.**~~
~~**[45CSR13, R13-2274D, A.2., 005-05 (#31 Tube Heater)]**~~

~~**7.1.3. The backup flare (005-06) shall only be used in case of a malfunction with the #31 tube heater (005-05)**~~.
~~**[45CSR13, R13-2274D, A.3., 005-06 (Flare)]**~~

7.1.14. No person shall cause, suffer, allow, or permit emission of smoke and/or particulate matter into the open air from any fuel burning unit which is greater than ten (10) percent opacity based on a six minute block average.
[45CSR§2-3.1., ~~45CSR13, R13-2274D, B.2.,~~ 831 ~~005-05~~ (#31 Tube Heater)]

~~**7.1.5. No person shall cause, suffer, allow or permit the discharge of particulate matter into the open air from all fuel burning units located at one plant, measured in terms of pounds per hour in excess of the amount determined as follows:**~~

~~**b. For Type 'b' fuel burning units, the product of 0.09 and the total design heat inputs for such units in million B.T.U.'s per hour, provided however that no more than six hundred (600) pounds per hour of particulate matter shall be discharged into the open air from all such units.**~~

~~Unit Number~~	~~Allowable Limits~~
	~~lb/hr~~
~~#31 Tube Heater~~	~~2.43~~

~~**[45CSR§§2-4.1. and 4.1.b., 45CSR13, R13-2274D, B.1., 005-05 (#31 Tube Heater)]**~~

7.1.26. Compliance with the particulate matter stack emissions in Section ~~7.1.5~~ 3.1.27 for #31 Tube Heater shall be shown by demonstrating the use of natural gas instead of solid fuels.
[45CSR§30-5.1.c., 831 ~~005-05~~ (#31 Tube Heater)]

~~**7.1.7. The permitted facility shall be constructed and operated in accordance with information filed in Permit Application R13-2274, R13-2274A, R13-2274B, R13-2274C, R13-2274D and any amendments thereto. The Director may suspend or revoke a permit if the plans and specifications upon which the approval was based are not adhered to.**~~
~~**[45CSR13, R13-2274D, C.3., 005-05 (#31 Tube Heater) and 005-06 (Flare)]**~~

7.1.38. For #31 Tube Heater malfunctions see Sections 4.1.911 and 4.1.113.

7.1.49. For unavoidable fuel shortages for the #31 Tube Heater see 4.1.124.

7.1.5~~10~~. No person shall cause, suffer, allow or permit the discharge of sulfur dioxide into the open air from all stacks located at one plant, measured in terms of pounds per hour, in excess of the amount determined as follows:

e. For Type 'b' and Type 'c' fuel burning units, the product of 3.1 and the total design heat inputs for such units discharging through those stacks in million BTU's per hour.

~~Unit Number~~	~~Design Heat Input~~ ~~MMBtu/hr~~	~~Allowable Limits~~ ~~lb/hr~~
~~Tube Heater #31~~	~~27~~	~~83.7~~

Compliance for sulfur dioxide emissions will be shown by the more stringent requirement in Section 3.1.27.

[45CSR§§10-3.1. and 3.1.e., 45CSR13, R13-2274D, B.1., 831 ~~005-05~~ (#31 Tube Heater)]

7.1.6~~11~~. Compliance with the sulfur dioxide stack emissions in Section ~~7.1.10~~ 3.1.27 for #31 Tube Heater shall be shown by demonstrating the use natural gas instead of solid fuels.
[45CSR§30-5.1.c., 831 ~~005-05~~ (#31 Tube Heater)]

7.1.7~~12~~. Unless otherwise approved by the Director, the maximum allowable emission rate for an individual stack shall not exceed by more than twenty-five percent (25%) the emission rate determined by prorating the total allowable emission rate specified in ~~Section 7.1.10 [~~45CSR§10-3.1~~]~~, on the basis of individual unit heat input at design capacity for all fuel burning units discharging through that stack.
[45CSR§§10-3.4. and 3.4.a., ~~45CSR13, R13-2274D, B.1.,~~ 831 ~~005-05~~ (#31 Tube Heater)]

7.1.8~~13~~. Due to unavoidable malfunction of equipment or inadvertent fuel shortages, emissions exceeding those provided for in 45CSR10 may be permitted by the Director for periods not to exceed ten (10) days upon specific application to the Director. Such application shall be made within twenty-four (24) hours of the equipment malfunction or fuel shortage. In cases of major equipment failure or extended shortages of conforming fuels, additional time periods may be granted by the Director provided a corrective program has been submitted by the owner or operator and approved by the Director.
[45CSR§10-9.1., ~~45CSR13, R13-2274D, B.1.,~~ 831 ~~005-05~~ (#31 Tube Heater)]

~~**7.1.14. No person shall cause, suffer, allow or permit particulate matter to be discharged from any incinerator into the open air in excess of the quantity determined by use of the following formula:**~~

~~**Emissions (lb/hr) = F x Incinerator Capacity (tons/hr)**~~

~~**Where, the factor, F, is as indicated in Table I below:**~~

~~**Table I: Factor, F, for Determining Maximum Allowable Particulate Emissions**~~
~~**Incinerator Capacity Factor F**~~

~~**A. Less than 15,000 lbs/hr 5.43**~~
~~**B. 15,000 lbs/hr or greater 2.72**~~

~~Unit~~	~~Allow PM Emissions~~ ~~lb/hr~~
~~#31 Tube Heater~~	~~18.15~~
~~Flare~~	~~18.15~~

~~**[45CSR§6-4.1., 45CSR13, R13-2274D, B.1., 005-05 (#31 Tube Heater), Flare 005-06]**~~

~~7.1.15. No person shall cause, suffer, allow or permit emission of smoke into the atmosphere from any incinerator which is twenty (20%) percent opacity or greater.~~
~~[45CSR§6-4.3., 45CSR13, R13-2274D, B.1., 005-05 (#31 Tube Heater), Flare 005-06]~~

~~7.1.16. The provisions of Section 7.1.15 [45CSR§6-4.3.] shall not apply to smoke which is less than forty (40%) percent opacity, for a period or periods aggregating no more than eight (8) minutes per start-up, or six (6) minutes in any sixty (60)-minute period for stoking operations.~~
~~[45CSR§6-4.4., 45CSR13, R13-2274D, B.1., 005-05 (#31 Tube Heater), Flare 005-06]~~

~~7.1.17. No person shall cause, suffer, allow or permit the emission of particles of unburned or partially burned refuse or ash from any incinerator which are large enough to be individually distinguished in the open air.~~
~~[45CSR§6-4.545CSR13, R13-2274D, B.1., 005-05 (#31 Tube Heater), Flare 005-06]~~

~~7.1.18. Incinerators, including all associated equipment and grounds, shall be designed, operated and maintained so as to prevent the emission of objectionable odors.~~
~~[45CSR§6-4.6., 45CSR13, R13-2274D, B.1., 005-05 (#31 Tube Heater), Flare 005-06]~~

~~7.1.19. Incineration of Residues and Hazardous Materials--Persons responsible for the incineration of hazardous materials such as insecticides, empty insecticide containers, toxic materials, certain chemical residues, explosives, used bandages and other medical wastes, pathological wastes, human and animal remains and other like materials shall give the utmost care and consideration to the potential harmful effects of the emissions resulting from such activities. Evaluation of these facilities as to adequacy, efficiency and emission potential will be made on an individual basis by the Director, working in conjunction with other appropriate governmental agencies.~~
~~[45CSR§6-4.7., 45CSR13, R13-2274D, B.1., 005-05 (#31 Tube Heater), Flare 005-06]~~

~~7.1.20. Due to unavoidable malfunction of equipment, emissions exceeding those provided for in 45CSR6 may be permitted by the Director for periods not to exceed five (5) days upon specific application to the Director. Such application shall be made within twenty-four (24) hours of the malfunction. In cases of major equipment failure, additional time periods may be granted by the Director provided a corrective program has been submitted by the owner or operator and approved by the Director.~~
~~[45CSR§6-8.2., 45CSR13, R13-2274D, B.1., 005-05 (#31 Tube Heater), Flare 005-06]~~

7.1.9~~21~~. **The #32 Solvent Column (VT32) must be controlled by either the Thermal Oxidizer (778) or by Flares (774a) at all times.**
[45CSR13, R13-2274, 4.1.1.]

~~The hourly and annual benzene emissions from #32 Column (VT32), #31 Tube Heater (831), Flare (774), #2 Base Washer (BW02), and #3 Base Washer (BW03) are:~~

~~Emission Source~~	~~Emission Point ID#~~	~~Benzene Emission Control Plan~~	~~Hourly Benzene Emissions (lb/hr)~~	~~Annual Benzene Emissions (lb/yr)~~
~~#32 Column~~	~~VT32~~	~~#31 Tube Heater/Flare~~	~~0.00018~~	~~1.6~~
~~#31 Tube Heater~~	~~831~~	~~None~~	~~0.00006~~	~~0.5~~
~~Flare~~	~~774~~	~~None~~	~~0.00003~~	~~0.3~~
~~#2 Base Washer~~	~~BW02~~	~~None~~	~~0.00002~~	~~0.2~~
~~#3 Base Washer~~	~~BW03~~	~~None~~	~~0.00002~~	~~0.2~~

~~[45CSR13, R13-2274D, A.1.]~~

7.2. Monitoring Requirements

7.2.1. **No additional requirements.**

~~**Compliance with the visible emission requirements for #31 Tube Heater and Flare shall be determined by conducting monthly Method 22-like visible emission checks. At a minimum, the observer must be trained and knowledgeable regarding the effects of background contrast, ambient lighting, observer position relative to lighting, wind, and the presence of uncombined water (condensing water vapor) on the visibility of emissions. This training may be obtained from written materials found in the References 1 and 2 from 40 C.F.R. Part 60, Appendix A, Method 22 or from the lecture portion of the 40 C.F.R. Part 60, Appendix A, Method 9 certification course.**~~

~~**The visible emission check shall be performed during periods of normal facility operation and appropriate weather conditions and for a sufficient time interval, but no less than one (1) minute, to determine if any visible emissions are present and.**~~

~~**If visible emissions are observed, the permittee shall conduct an opacity evaluation in accordance with Method 9 of 40 C.F.R. 60, Appendix A, within 24 hours unless the visible emissions are corrected beforehand and the units are operated at normal operating conditions.**~~

~~**[45CSR§30-5.1.c., 45CSR§2-3.2., 45CSR13, R13-2274D, B.1., #31 Tube Heaters (005-05) and Flare (005-06)]**~~

7.3. Testing Requirements

7.3.1. No additional requirements.

7.4. Recordkeeping Requirements

7.4.1. The permittee shall calculate actual emissions from the plant on a monthly basis and calculate annual emissions on a 12-month rolling average. Actual emissions shall be calculated using recordkeeping data, test results, AP-42 emission factors or other engineering methods. The following records shall be maintained on a monthly basis:

1. Fuel consumption of the process heaters [Tube Heaters #31 (831)]

2. Operating hours of the process vents [(Solvent Column #32 (VT32), Naphthalene Column #31 (VT31), Base Plant (BW02 and BW03)].

[45CSR13, R13-2274, 4.4.5.1., 4.4.5.2.]

~~**To determine compliance with Sections 7.1.1 and 7.1.2, the permittee shall keep the following records on a monthly basis at the facility:**~~

~~**a. Temperature logs of the #31 Afterburner.**~~

~~**b. Date and duration when the #31 Afterburner is not operational, and the flare is used.**~~

~~**c. The following records must be kept when the backup flare is being used:**~~

~~**1. The date, time, and the duration the flare was used.**~~

~~**2. Volume of auxiliary gas burned.**~~

~~**3. Total volume of gas burned.**~~

~~**d. Monthly reports outlined in the maintenance schedule for the backup flare**~~

~~**[45CSR13, R13-2274D, B.11., e through h.]**~~

7.5. Reporting Requirements

7.5.1. No additional requirements.

8.0. Source-Specific Requirements [Pencil Pitch Area Hot Oil Heater (773 ~~008-01~~), Pencil Pitch Dryer (770 ~~008-02~~), and Pencil Pitch Baghouse (771 ~~008-03~~) of source group 008 and emission point ID(s) (770, 771, and 773~~ Stacks~~)]

8.1. Limitations and Standards

8.1.1.~~A. In addition to maintaining compliance with all existing applicable regulations and permits, the Company also agrees to implement and comply with source specific control measures, emission standards, recordkeeping and reporting requirements, and approved testing procedures established and referenced herein as follows:~~

~~Pitch Dryer~~

Total particulate matter (PM) ~~and PM_{10}~~ emissions from the pencil Pitch dryer shall not exceed 1.86 pounds per hour (lbs/hr). ~~and~~ Compliance with the PM emission limits of this requirement shall demonstrate compliance with the less stringent limits of 22.4 lbs/hr per 45CSR§7-4.1.
[45CSR13, R13-2274, 4.1.28., (770) ~~CO-SIP-91-32, III.8., 008-02~~]

8.1.2. Total PM_{10} emissions from the pencil pitch dryer shall not exceed 0.59 pounds per hour (lbs/hr). ~~respectively~~
[45CSR13, R13-2274, 4.1.28., (770) ~~CO-SIP-91-32, III.8., 008-02~~]

8.1.3.~~B.~~ The Company shall operate and maintain a fabric filter baghouse designed to in~~as~~sure, at minimum, the necessary collection and control efficiencies required to achieve and maintain compliance with the total particulate matter (PM) and PM_{10} emission limitations set forth in Sections 8.1.1 and 8.1.2 ~~.A~~ and the visible emission standards of Sections 3.1.15 and 3.1.16 [45 CSR§§7-3.1 and 7-3.2].
[45CSR13, R13-2274, 4.1.29., (771) ~~CO-SIP-91-32, III.8., 008-02~~]

8.1.4~~2~~. No person shall cause, suffer, allow, or permit emission of smoke and/or particulate matter into the open air from any fuel burning unit which is greater than ten (10) percent opacity based on a six minute block average.
[45CSR§2-3.1., Hot Oil Heater (773)]

~~8.1.3. The maximum allowable hourly and annual benzene emissions for the Hot Oven Heater (773) and Pencil Pitch Dryer (770).~~

~~Emission Source~~	~~Emission Point ID#~~	~~Benzene Emission Control Plan~~	~~Hourly Benzene Emissions (lb/hr)~~	~~Annual Benzene Emissions (lb/yr)~~
~~Hot Oil Heater~~	~~773~~	~~None~~	~~0.00001~~	~~0.1~~
~~Pencil Pitch Dryer~~	~~770~~	~~None~~	~~0.00001~~	~~0.1~~

~~[45CSR13, R13-2274D, A.1.]~~

8.1.5. Compliance with the stack emissions in Section 3.1.27 from the Pencil Pitch Hot Oil Heater and Pencil Pitch Dryer shall be shown by demonstrating the use of natural gas instead of solid fuels or liquid fuels.
[45CSR§30-5.1.c., (770, 773)]

8.1.6. See Section 19.1.13 for Operation and Maintenance of Air Pollution Control Equipment.

8.2. Monitoring Requirements

8.2.1. **See Section 3.2.1for visible emission observation frequency of the Pencil Pitch baghouse stack (771).**
~~**No additional requirement.**~~

8.3. Testing Requirements

8.3.1. No additional requirement.

8.4. Recordkeeping Requirements

8.4.1. **The permittee shall show compliance with Section 8.1.3 by maintaining records of the maintenance performed on the Pencil Pitch baghouse. These records shall include all maintenance work performed on the Pencil Pitch baghouse including the frequency of bag/filter change outs. Records shall state the date and time of the dust collector maintenance, the results, corrective action taken, and the inspector name, if any.**
[45CSR§30-5.1.c.]
~~**No additional requirement.**~~

8.4.2. In addition to showing compliance with the maintenance performed in Section 8.4.2 for Section 8.1.3, the permittee shall completely inspect the Pencil Pitch baghouse on an annual basis. Records shall state the date and time of the annual maintaince, the inspection results, if any corrective action taken, and who performed the inspection.
[45CSR§30-5.1.c.]

8.4.3. See Section 19.4.1 for Record of Maintenance of Air Pollution Control Equipment.

8.4.4. See Section 19.4.2 for Record of Malfunctions of Air Pollution Control Equipment.

8.5. Reporting Requirements

8.5.1. No additional requirement.

9.0. Source-Specific Requirements [Product Loading Racks (LR 2-2, LR 3-2, LR 4-1, LR 4-2, LR 5-2, LR 5-3, LR 4-5, LR 5-4, LR 5-5, R-1, R-2, LR 1-1, LR 1-2, LR 1-3, LR 1-4, LR 1-5, LR 2-1, , LR 3-1, LR 4-3, LR 4-4, LR 4-6, LR 5-1, LR 5-6, LR 5-7, LR 5-8, LR 5-9, LR 5-10) of source Group 009 and emission point ID(s) (774a, 776, 777, 778~~31, Stack, Stack-Stack, Stack~~)]

9.1. Limitations and Standards

9.1.1. The maximum quantity of crude coke oven tar (CCOT) loaded on the barges shall not exceed 3,125,000 gallons per year, and the average fill rate shall not exceed 700 gallons per minute. The barges must be loaded by submerged fill.
[45CSR13, R13-2274~~D~~, 4.1.11. ~~A.5.~~]

~~**9.1.2. The maximum quantity of crude coke oven tar (CCOT) loaded to the tank trucks and rail cars shall not exceed 3,125,000 gallons per year, and the average fill rate shall not exceed 500 gallons per minute. The tank trucks and rail cars must be loaded by submerged fill.**~~
~~**[45CSR13, R13-2274D, A.6.]**~~

9.1.2~~3~~. The permittee shall not load barges and tank trucks/rail cars simultaneously.
[45CSR13, R13-2274~~D~~, 4.1.12 ~~A.7.~~]

~~**9.1.4. The maximum hourly and annual benzene emissions from product loading, loading barges, and trucks:**~~

~~Emission Source~~	~~Emission Point ID#~~	~~Benzene Emission Control Plan~~	~~Hourly Benzene Emissions (lb/hr)~~	~~Annual Benzene Emissions (lb/yr)~~
~~CCOT Barge Loading~~	~~R1 & R2~~	~~Submerged Fill~~	~~4.862~~	~~729.3~~
~~CBO Product Loading~~	~~LR~~	~~None~~	~~0.181~~	~~41.9~~
~~Creosote Product Loading~~	~~LR~~	~~None~~	~~0.132~~	~~68.8~~
~~Debenzolizer Solvent Product Loading~~	~~LR~~	~~None~~	~~0.078~~	~~11.5~~
~~CFNO Product Loading~~	~~LR~~	~~None~~	~~0~~	~~0~~
~~P&R Oil Product Loading~~	~~LR~~	~~None~~	~~0.001~~	~~0~~
~~LBTB Product Loading~~	~~LR~~	~~None~~	~~1.436~~	~~23.9~~

~~**[45CSR13, R13-2274D, A.1.]**~~

9.1.3. Loading Racks LR 4-5, LR 5-4, and LR 5-5 must be controlled by Scrubber E.
[45CSR13, R13-2274, 4.1.5.]

9.1.4. The following materials must be loaded from loading racks controlled by the thermal oxidizers or flares: Petro tar, PSB, MPSB, refined tar, naphthalene, creosote.
[45CSR13, R13-2274, 4.1.17.]

9.1.5. Pitch, either off the still or blended, must be loaded from loading racks controlled by Scrubber E.
[45CSR13, R13-2274, 4.1.17.1.]

9.1.6. Crude tar loading to trucks or railcars shall be loaded via submerge fill.
[45CSR13, R13-2274, 4.1.18.]

9.2. Monitoring Requirements

9.2~~4~~.1. To determine compliance with Section 9.1.1 and ~~through~~ 9.1.2~~3~~, the permittee shall keep the following records on a monthly basis at the facility:

a. Total hours of operation of the barge, tank truck, and rail car loading system when loading (CCOT) crude coke oven tar.

b. Total gallons of (CCOT) crude coke oven tar loaded by the barge, tank truck, and rail car loading facility.

[45CSR13, R13-2274~~D~~, 4.2.1.2 and 4.2.1.3. ~~B.11. b. and c.~~]

9.3. Testing Requirements

9.3.1. No additional requirements.

9.4. Recordkeeping Requirements

9.4.1. **The permittee shall calculate actual emissions from the plant on a monthly basis and calculate annual emissions on a 12-month rolling average. Actual emissions shall be calculated using recordkeeping data, test results, AP-42 emission factors or other engineering methods. The following records shall be maintained on a monthly basis:**

1. Quantity of material loaded at the loading racks.

[45CSR13, R13-2274~~D~~, 4.4.5.4. ~~B.11. b. and c.~~]

~~**9.4.2. No additional requirements.**~~

9.5. Reporting Requirements

9.5.1. No additional requirements.

10.0. Source-Specific Requirements [Tanks ~~Regulated of source~~ Group 00A~~B~~ ~~with Controls~~: ~~#31 Tube Heater for Tanks~~ 2N, 3N, 6, 7, 9, 10, 11, 13, 14, 17, 30, 40, 41, 48, 49, 50, 55, 56, 58, 82, 83, 89, 126, 127, 251, 252, 253, 254, 382, 406, 407, and 623~~; Scrubber B for Tank 4; Submerge Fill for Tanks 51 and 52;~~ Tanks 801, 802, 804, 805, 806, and 808 ~~no add-on controls devices for Tanks~~ 1, 2, 3, 5, 8, 15, 16, 18, 20, 21, 23, 24, 25, 28, 33, 42, 51, 52, 53, 54, 57, 59, 70, 71, 72, 73, 84, 85, 87,88,100, 151, 152, 153, 300, 301, 302, 303, 304, 305, 308, 323, 337, 351, 352, 360, 361, 362, 363, 364, 377, 378, 381, ~~382~~, 383, 408, 501, 502, ~~540, 541~~, 553, 560, 561, 580, 803, 1M, 4N, 5N, and 6R; and emission point ID(s) (778~~31~~, 774a, and 777, ~~775Stack Stack Stack~~)]

10.1 Limitations and Standards

10.1.1. The annual throughput of benzene to Tank 11 shall not exceed 980,000 gallons per year. **[45CSR13, R13-2274~~D~~, 4.1.10. ~~A.4.~~, Tank 11 (11 ~~00B-2D~~)]**

~~**10.1.2. Emissions from the Benzene Storage Tank (Tank 11) (00B-29) shall be fed to Tube Heater #31. [45CSR13, R13-2274D, A.2., #31 Tube Heater (005-05)]**~~

~~**10.1.3. The maximum hourly and annual benzene emissions from Tanks 7, 9, 6, 30, 40, 41, 48, 49, 58, 89, 55, 56, 10, 11, 4, 84, 85, 382, 51, 52, 5, 383, 1, 3, 24, 25, 33, 362, 364, 360, 361, 363, 59, 23, 303, 304, 305, 540, 541, 501, 502, and 580.**~~

~~Emission Source~~	~~Emission Point ID#~~	~~Benzene Emission Control Plan~~	~~Hourly Benzene Emissions (lb/hr)~~	~~Annual Benzene Emissions (lb/yr)~~
~~Tank 7 - AFCO~~	~~7~~	~~#31 Tube Heater/Flare~~	~~0.00053~~	~~2.1~~
~~Tank 9 - AFCO~~	~~9~~	~~#31 Tube Heater/Flare~~	~~0.00053~~	~~2.1~~
~~Tank 6 - CCOT~~	~~6~~	~~#31 Tube Heater/Flare~~	~~0.11834~~	~~47.5~~
~~Tank 30 - CCOT~~	~~30~~	~~#31 Tube Heater/Flare~~	~~0.24166~~	~~41.7~~
~~Tank 40 - CCOT~~	~~40~~	~~#31 Tube Heater/Flare~~	~~0.20184~~	~~45.5~~
~~Tank 41 - CCOT~~	~~41~~	~~#31 Tube Heater/Flare~~	~~0.11834~~	~~3.3~~
~~Tank 48 - CCOT~~	~~48~~	~~#31 Tube Heater/Flare~~	~~0.20184~~	~~104.5~~
~~Tank 49 - CCOT~~	~~49~~	~~#31 Tube Heater/Flare~~	~~0.16751~~	~~82.6~~
~~Tank 58 - CCOT~~	~~58~~	~~#31 Tube Heater/Flare~~	~~0.27482~~	~~123.5~~
~~Tank 89 - RCO~~	~~89~~	~~#31 Tube Heater/Flare~~	~~0.07313~~	~~145.8~~
~~Tank 55 - RCO~~	~~55~~	~~#31 Tube Heater/Flare~~	~~0.03479~~	~~21.4~~
~~Tank 56 - RCO~~	~~56~~	~~#31 Tube Heater/Flare~~	~~0.03479~~	~~42.6~~
~~Tank 10 - Middle Oil~~	~~10~~	~~#31 Tube Heater/Flare~~	~~0.00131~~	~~0.7~~
~~Tank 11 - Conc. Solvent~~	~~11~~	~~#31 Tube Heater/Flare~~	~~1.08696~~	~~99.6~~
~~Tank 4 - CCOT~~	~~4~~	~~Scrubber B~~	~~3.83693~~	~~304.7~~
~~Tank 84 - AFCO/Cresylate~~	~~84~~	~~None~~	~~0.02635~~	~~2~~
~~Tank 85 - AFCO/Cresylate~~	~~85~~	~~None~~	~~0.02635~~	~~2~~

~~Emission Source~~	~~Emission Point ID#~~	~~Benzene Emission Control Plan~~	~~Hourly Benzene Emissions (lb/hr)~~	~~Annual Benzene Emissions (lb/yr)~~
~~Tank 382 - AFCO/Cresylate~~	~~382~~	~~None~~	~~0.0958~~	~~24.5~~
~~Tank 51 - Cap Water~~	~~51~~	~~Submerged Fill~~	~~0.17382~~	~~106.9~~
~~Tank 52 - Cap Water~~	~~52~~	~~Submerged Fill~~	~~0.17382~~	~~106.4~~
~~Tank 383 - CFNO~~	~~383~~	~~None~~	~~0.04274~~	~~0.4~~
~~Tank 1 - CBO~~	~~1~~	~~None~~	~~0.17662~~	~~40.5~~
~~Tank 5 - Cap Water~~	~~5~~	~~None~~	~~0.17382~~	~~87.7~~
~~Tank 3 - CBO~~	~~3~~	~~None~~	~~0.29438~~	~~47~~
~~Tank 24 - Deben. Solvent~~	~~24~~	~~None~~	~~0.0013~~	~~4.5~~
~~Tank 25 - Deben. Solvent~~	~~25~~	~~None~~	~~0.0013~~	~~4.5~~
~~Tank 33 - Deben. Solvent~~	~~33~~	~~None~~	~~0.0013~~	~~0.4~~
~~Tank 362 - Deben. Solvent~~	~~362~~	~~None~~	~~0.01159~~	~~2.3~~
~~Tank 364 - Deben. Solvent~~	~~364~~	~~None~~	~~0.01159~~	~~1.6~~
~~Tank 360 - LBTB~~	~~360~~	~~None~~	~~0.03089~~	~~21.2~~
~~Tank 361 - LBTB~~	~~361~~	~~None~~	~~0.03089~~	~~21.2~~
~~Tank 363 - LBTB~~	~~363~~	~~None~~	~~0.03089~~	~~21.2~~
~~Tank 59 - LBTB~~	~~59~~	~~None~~	~~0.03089~~	~~222.5~~
~~Tank 23 - LBTB~~	~~23~~	~~None~~	~~0.03089~~	~~48.1~~
~~Tank 303 - P&R Oil~~	~~303~~	~~None~~	~~0.01487~~	~~0.3~~
~~Tank 304 - P&R Oil~~	~~304~~	~~None~~	~~0.01487~~	~~0.3~~
~~Tank 305 - P&R Oil~~	~~305~~	~~None~~	~~0.01487~~	~~0.4~~
~~Tank 540 - Process WW~~	~~540~~	~~None~~	~~0.00006~~	~~0.14~~
~~Tank 541 - Process WW~~	~~541~~	~~None~~	~~0.00006~~	~~0.14~~
~~Tank 501 - Non-Process WW~~	~~501~~	~~None~~	~~0.00001~~	~~0.03~~
~~Tank 502 - Non-Process WW~~	~~502~~	~~None~~	~~0.00001~~	~~0.03~~
~~Tank 580 - Combined WW~~	~~580~~	~~None~~	~~0.00008~~	~~0.03~~

~~[45CSR13, R13-2274D, A.1.]~~

10.1.2. Storage Tanks 801, 802, 804, 805, 806, and 808 must be controlled by Scrubber E. [45CSR13, R13-2274, 4.1.5.]

10.1.3. The following materials must be stored or blended in tanks controlled by the thermal oxidizer or flares: Crude tar, crude/petro tar blend, petro tar, RCO, crude and petro distillate off of the columns, PSB, modified PSB, refined tar, benzene free tar, liquid fuel, naphthalene, creosote or petroleum creosote solution, correction oil. [45CSR13, R13-2274, 4.1.16.]

10.1.4. Pitch, either off the still or blended, must be stored in tanks controlled by Scrubber E. [45CSR13, R13-2274, 4.1.16.1.]

10.1.5. No person shall cause, suffer, allow or permit visible emissions from any storage structure(s) associated with any manufacturing process(es) that pursuant to Section 3.1.20 [45CSR§7-5.1.] is required to have a full enclosure and be equipped with a particulate matter control device. [45CSR§7-3.7., Group 00A]

10.2 Monitoring Requirements

10.2~~4~~.1. To determine compliance with Section 10.1.1 the permittee shall keep ~~the following~~ records on a monthly basis of the throughput of benzene to storage Tank 11 at the facility~~:~~.
[45CSR13, R13-2274~~D~~, 4.2.1.1., ~~B.11.a.,~~ Tank 11 (~~00B-2D~~)]
~~a.~~
~~No additional requirements.~~

10.3. Testing Requirements

10.3.1. No additional requirements.

10.4. Recordkeeping Requirements

10.4.1. **The permittee shall calculate actual emissions from the plant on a monthly basis and calculate annual emissions on a 12-month rolling average. Actual emissions shall be calculated using recordkeeping data, test results, AP-42 emission factors or other engineering methods. The following records shall be maintained on a monthly basis:**

1. Content and throughput for the tanks.

[45CSR13, R13-2274, 4.4.5.3.]

10.4.2. Except as provided in 40 C.F.R. § 60.113 (d), the owner or operator subject to 40 C.F.R. Part 60 Subpart K shall maintain a record of the petroleum liquid stored, the period of storage, and the maximum true vapor pressure of that liquid during the respective storage period.
[45CSR16, 40 C.F.R. § 60.113 (a), (Tanks 58, 59, and 806)]

10.4.3. The owner or operator shall keep copies of all records required by 40 C.F.R. § 60.116b, except for the record required by Section 10.4.4 [40 C.F.R. § 60.116b (b)], for at least 2 years. The record required by Section 10.4.4 [40 C.F.R. § 60.116b (b)] will be kept for the life of the source.
[45CSR16, 40 C.F.R. § 60.116b (a), (Tanks 48, 49)]

10.4.4. The owner or operator of each storage vessel as specified in 40 C.F.R. § 60.110b (a) shall keep readily accessible records showing the dimension of the storage vessel and an analysis showing the capacity of the storage vessel.
[45CSR16, 40 C.F.R. § 60.116b (b), (Tanks 48 and 49)]

10.4.5. The owner or operator of each storage vessel either with a design capacity greater than or equal to 151 m^3 storing a liquid with a maximum true vapor pressure greater than or equal to 3.5 kPa shall maintain a record of the VOL stored, the period of storage, and the maximum true vapor pressure of that VOL during the respective storage period.
[45CSR16, 40 C.F.R. § 60.116b (c), (Tanks 48 and 49)]

10.5. Reporting Requirements

10.5.1. **The owner or operator of each storage vessel either with a design capacity greater than or equal to 151 m^3 storing a liquid with a maximum true vapor pressure that is normally less than 5.2 kPa or with a design capacity greater than or equal to 75 m^3 but less than 151 m^3 storing a liquid with a maximum true vapor pressure that is normally less than 27.6 kPa shall notify the Administrator within 30 days when the maximum true vapor pressure of the liquid exceeds the respective maximum true vapor vapor pressure values for each volume range.**
[45CSR16, 40 C.F.R. § 60.7 (a), 40 C.F.R. § 60.116b (d)]

~~**No additional requirements.**~~

11.0 Source-Specific Requirements [Effluent Plant – Group 00C]

11.1. Limitations and Standards

11.1.1. **The API Separator, DAF Separator, Tanks 510, 511, 540, and 541 shall be enclosed and the off-gases directed to the Aeration Basin at the wastewater treatment plant. [45CSR13, R13-2274, 4.1.19.]**

~~**The maximum hourly and annual benzene emissions from the Effluent Plant :**~~

~~Emission Source~~	~~Emission Point ID#~~	~~Benzene Emission Control Plan~~	~~Hourly Benzene Emissions (lb/hr)~~	~~Annual Benzene Emissions (lb/yr)~~
~~WWTP – Tank 510~~	~~510~~	~~Biological Treatment~~	~~0~~	~~0~~
~~WWTP – Tank 510~~	~~511~~	~~Biological Treatment~~	~~0~~	~~0~~
~~WWTP – API Separator~~	~~WWTP~~	~~Biological Treatment~~	~~0~~	~~0~~
~~WWTP – DAF Separator~~	~~WWTP~~	~~Biological Treatment~~	~~0~~	~~0~~
~~WWTP – Clarifier~~	~~WWTP~~	~~Biological Treatment~~	~~0.00013~~	~~1.1~~
~~WWTP – Aeration Basin~~	~~WWTP~~	~~Biological Treatment~~	~~0.04193~~	~~367.3~~

~~**[45CSR13, R13-2274D, A.1.]**~~

11.1.2. No person shall cause, suffer, allow or permit visible emissions from any storage structure(s) associated with any manufacturing process(es) that pursuant to Section 3.1.20 [45CSR§7-5.1.] is required to have a full enclosure and be equipped with a particulate matter control device. [45CSR§7-3.7., Tanks 510, 511, 540, and 541]

11.2 Monitoring Requirements

11.2.1. No additional requirements

11.3 Testing Requirements

11.3.1. No additional requirements

11.4 Recordkeeping Requirements

11.4.1. No additional requirements

11.5 Reporting Requirements

11.5.1. No additional requirements

12.0 Source-Specific Requirements [Barge and Tankcar Heating – Group 00D and Tankcar Cleaning - Group 00E]

12.1. Limitations and Standards

12.1.1. **The RCO Tankcar Heating must be controlled by either the Thermal Oxidizer (778) or by Flares (774a) at all times.**
[45CSR13, R13-2274, 4.1.1.]

~~**The maximum hourly and annual benzene emissions from Barge and Tankcar Heating:**~~

~~Emission Source~~	~~Emission Point ID#~~	~~Benzene Emission Control Plan~~	~~Hourly Benzene Emissions (lb/hr)~~	~~Annual Benzene Emissions (lb/yr)~~
~~CCOT Tankcar Heating~~	~~Z01-1~~	~~None~~	~~0.11938~~	~~6.2~~
~~RCO – Tankcar Heating~~	~~Z01-3~~	~~#31 Tube Heater/Flare~~	~~0.00110~~	~~0.1~~
~~RCO – Barge Heating~~	~~Z01-2~~	~~None~~	~~1.45479~~	~~130.7~~

~~**[45CSR13, R13-2274D, A.1.]**~~

12.2. Monitoring Requirements

12.2.1. No additional requirements

12.3. Testing Requirements

12.3.1. No additional requirements

12.4. Recordkeeping Requirements

12.4.1. **The permittee shall calculate actual emissions from the plant on a monthly basis and calculate annual emissions on a 12-month rolling average. Actual emissions shall be calculated using recordkeeping data, test results, AP-42 emission factors or other engineering methods. The following records shall be maintained on a monthly basis:**

1. Quantity of material unloaded from incoming vehicles requiring heat up

2. Quantity of tankcars cleaned.

[45CSR13, R13-2274, 4.4.5.6. and 4.4.5.7.]

~~**No additional requirements**~~

12.5. Reporting Requirements

12.5.1. No additional requirements

13.0 Source-Specific Requirements [Equipment Leaks – Group 007]

13.1. Limitations and Standards

13.1.1. For all equipment not otherwise subject to the LDAR programs of 40 C.F.R. Part 63 Subparts H and MMM, a plant wide leak detection and repair program shall be implemented.

~~The maximum hourly and annual benzene emissions from Equipment Leaks:~~

~~Emission Source~~	~~Emission Point ID#~~	~~Benzene Emission Control Plan~~	~~Hourly Benzene Emissions (lb/hr)~~	~~Annual Benzene Emissions (lb/yr)~~
~~Equipment Leaks~~	~~EQU~~	~~HON LDAR~~	~~0.47217~~	~~4,135.6~~

[45CSR13, R13-2274~~D~~, 4.1.26., ~~A.1.~~]

13.1.2. An initial LDAR event identifying all components shall be conducted, where the components are identified and instrumentally monitored for leaks. Components include pumps, agitators, valves, connectors, pressure relief devices, open-ended lines or valves, instrumentation systems and closed vent systems.
[45CSR13, R13-2274, 4.1.26.1.]

13.1.3. An initial repair attempt of any leaking equipment must be made within 5 days of finding the leak.
[45CSR13, R13-2274, 4.1.26.2.]

13.1.4. A leak will be defined as an instrument reading of the following concentrations:

1. 10,000 ppm for Agitators

2. 2,000 ppm for Pumps

3. 500 ppm for Valves, Connectors, Pressure Relief Devices, Instrumentation Systems, and Closed Vent Systems

[45CSR13, R13-2274, 4.1.26.3.]

13.1.5. Subsequent monitoring shall be conducted at the following frequency:

1. After the initial event, monitoring shall be conducted every year for a period of 3-years, where 1/3 of the plant is monitored each year.

2. At the end of the 3 year period, the percent leaking equipment (PLE) is to be calculated.

[45CSR13, R13-2274, 4.1.26.4.]

13.1.6. If the PLE is less than 2%, components shall be monitored once every 5-years.
[45CSR13, R13-2274, 4.1.26.4.2.1.]

13.1.7. If the PLE is greater than or equal to 2%, monitoring will continue on the same frequency (1/3 of the plant every year for 3-years). After that 3-year period the PLE shall be calculated again to determine if the monitoring frequency can be decreased to once every 5 years.
[45CSR13, R13-2274, 4.1.26.4.2.2.]

13.1.8. Open-ended lines and valves shall be equipped with a cap, blind flange, plug or a second valve. [45CSR13, R13-2274, 4.1.26.5.]

13.2 Monitoring Requirements

13.2.1. **The permittee shall monitor the applicable equipment of Sections 13.1.1 through 13.1.8 in accordance with 40 C.F.R. Part 60 Appendix A, Method 21.**
[45CSR13, R13-2274, 4.2.6.]
~~**No additional requirements**~~

13.3 Testing Requirements

13.3.1. No additional requirements

13.4 Recordkeeping Requirements

13.4.1. **In order to determine compliance with Sections 13.1.1 through 13.1.8 the permittee shall keep the following records:**

1. Date and results of the initial monitoring event.

2. List of leaking equipment, repair dates and corrective actions.

3. Date and results of all subsequent monitoring.

4. Results of PLE calculations.

[45CSR13, R13-2274, 4.4.6.]

~~**No additional requirements**~~

13.5 Reporting Requirements

13.5.1. No additional requirements

14.0 Source-Specific Requirements [Sections of 40 C.F.R. Part 61 Subpart J - National Emission Standard for Equipment Leaks (Fugitive Emission Source) of Benzene - Applicable to this Facility; (Equipment in Benzene Service)]

14.1. Limitations and Standards

Applicability

14.1.1. The facility is subject to 40 C.F.R. Part 61 Subpart J. However, any sources subject to the equipment leak standards of 40 C.F.R. Part 61 Subpart J must follow the equipment leak requirements of 40 C.F.R. Part 63 Subpart H [Section 18.0].
[45CSR13, R13-2274, 4.1.24.]

14.1.2~~1~~. The provisions of 40 C.F.R. Part 61 Subpart J apply to each of the following sources that are intended to operate in benzene service: pumps, compressors, pressure relief devices, sampling connection systems, open-ended valves or lines, valves, connectors, surge control vessels, bottoms receivers, and control devices or systems required by 40 C.F.R. Part 61 Subpart J.

Note: The overhead equipment from the Debenzolizer to Tank 11 and from Tank 11 to Boiler 2 or 3 may contain material that is "in benzene service". Thus, the overhead equipment is subject to 40 C.F.R. Part 61 Subpart J.

Section 14.1.2~~1~~ does require compliance certification.

[45CSR34~~15~~, 40 C.F.R. § 61.110 (a), 45CSR13, R13-2274, 4.1.24.]

14.1.3~~2~~. If an owner or operator applies for one of the exemptions in Section 14.1.3~~2~~ [40 C.F.R. § 61.110 (c)], then the owner or operator shall maintain records as required in 40 C.F.R. § 61.246 (i).

(1) Any equipment in benzene service that is located at a plant site designed to produce or use less than 1,000 megagrams (1,102 tons) of benzene per year is exempt from the requirements of 40 C.F.R. § 61.112. ~~**Currently, Koppers has the design capabilities to use more than 1,102 tons of benzene per year.**~~

(2) Any process unit (defined in 40 C.F.R. § 61.241) that has no equipment in benzene service is exempt from the requirements of 40 C.F.R. § 61.112. ~~**Koppers does not qualify for this exemption since the Debenzolizer Unit does have equipment in benzene service.**~~

Section 14.1.3~~2~~ does require compliance certification.

[45CSR34~~15~~, 40 C.F.R. § 61.110 (c)]

Definition

14.1.4~~3~~. As used in 40 C.F.R. Part 61 Subpart J, all terms not defined herein shall have the meaning given them in the Act, in 40 C.F.R. Part 61 Subpart A, or in 40 C.F.R. Part 61 Subpart V. ~~**Section 14.1.43 does require compliance certification.**~~
[45CSR34~~15~~, 40 C.F.R. § 61.111]

Standards

14.1.5~~4~~. **The facility is subject to 40 C.F.R. Part 61 Subpart J. However, any sources subject to the equipment leak standards of this rule must follow the equipment leak requirements of** ~~**The Company shall implement a Supplemental Environmental Project (SEP) which will require that all plant equipment which is subject to the Benzene NESHAP (40 C.F.R. Part 61 Subpart J) shall follow the Leak Detection and Repair requirements in**~~ 40 C.F.R. 63 Subpart H **[Section 18.0]**.
[45CSR13, R13-2274, 4.1.24. ~~**CO-R13-E-2005-4, Section III.1.**~~**]**

~~**14.1.5. Each owner or operator subject to the provisions of 40 C.F.R. Part 61 Subpart J shall comply with the requirements of 40 C.F.R. Part 61 Subpart V. Compliance with Section 14.1.5 will be demonstrated by the more stringent leak detection and requirements of 40 C.F.R. Part 63 Subpart H instead of 40 C.F.R. Part 61 Subpart V.**~~
~~**[45CSR15, 40 C.F.R. § 61.112 (a)]**~~

~~**Note: The Debenzolizer Unit is not subject to 40 C.F.R. Part 63 Subparts F, G, and H (HON). This was addressed in Koppers' letter to USEAPA of August 24, 2004. However, Koppers is required to follow CO-R13-E-2005-4, which requires equipment subject to 40 C.F.R. Part 61 Subpart J to follow the LDAR requirements of 40 C.F.R. Part 63 Subpart H.**~~

14.2. Monitoring Requirements

14.2.1. No additional requirements

14.3. Testing Requirements

14.3.1. No additional requirements

14.4. Recordkeeping Requirements

14.4.1. No additional requirements

14.5. Reporting Requirements

14.5.1. No additional requirements

15.0. Source-Specific Requirements [Sections of 40 C.F.R. Part 61 Subpart FF - National Emission Standard for Benzene Waste Operation Applicable to this Facility - Applicable to this Facility (Equipment in Benzene Service)]

15.1. Limitations and Standards

Applicability

15.1.1. The provisions of 40 C.F.R. Part 61 Subpart FF apply to owners and operators of chemical manufacturing plants, coke by-product recovery plants, and petroleum refineries. Koppers is a chemical manufacturing plant that is subject to 40 C.F.R. Part 61 Subpart FF. Section 15.1.1 does require compliance certification.
[45CSR34~~15~~, 40 C.F.R. § 61.340 (a)]

Standards: General

15.1.2. An owner or operator of a facility at which the total annual benzene quantity from facility waste is less than 10 megagrams per year (Mg/yr) (11 ton/yr) shall be exempt from the requirements of 40 C.F.R. § 61.342 (b) and (c). The total annual benzene quantity from facility waste is the sum of the annual benzene quantity for each waste stream at the facility that has a flow-weighted annual average water content greater than 10 percent or that is mixed with water, or other wastes, at any time and the mixture has an annual average water content greater than 10 percent. The benzene quantity in a waste stream is to be counted only once without multiple counting if other waste streams are mixed with or generated from the original waste stream. Other specific requirements for calculating the total annual benzene waste quantity are as follows:

(1) Wastes that are exempted from control under 40 C.F.R §§ 61.342 (c) (2) and 61.342 (c) (3) are included in the calculation of the total annual benzene quantity if they have an annual average water content greater than 10 percent, or if they are mixed with water or other wastes at any time and the mixture has an annual average water content greater than 10 percent.

(2) The benzene in a material subject to 40 C.F.R. Part 61 Subpart FF that is sold is included in the calculation of the total annual benzene quantity if the material has an annual average water content greater than 10 percent.

(3) Benzene in wastes generated by remediation activities conducted at the facility, such as the excavation of contaminated soil, pumping and treatment of groundwater, and the recovery of product from soil or groundwater, are not included in the calculation of total annual benzene quantity for that facility. If the facility's total annual benzene quantity is 10 Mg/yr (11 ton/yr) or more, wastes generated by remediation activities are subject to the requirements of 40 C.F.R §§ 61.342 (c) through (h). If the facility is managing remediation waste generated offsite, the benzene in this waste shall be included in the calculation of total annual benzene quantity in facility waste, if the waste streams have an annual average water content greater than 10 percent, or if they are mixed with water or other wastes at any time and the mixture has an annual average water content greater than 10 percent.

(4) The total annual benzene quantity is determined based upon the quantity of benzene in the waste before any waste treatment occurs to remove the benzene except as specified in Section 15.3.3 (1) (i) (A) through (C) [40 CF.R. §61.355 (c) (1) (i) (A) through (C)].

Note: The total annual benzene quantity from facility waste at the Follansbee Tar Plant is less than 11 tons/yr. Therefore, Koppers is exempt from 40 C.F.R. §§ 61.342 (b) and (c), as well as 40 C.F.R. §§ 61.343 though 61.354. But, Koppers must comply with the recordkeeping and reporting requirements of 40 C.F.R. §§ 61.356 and 61.357 respectively. Koppers must also repeat the determination of the total annual benzene quantity annually and whenever there is change in the process that could cause the quantity to increase to 11 tons/yr or more.

[45CSR34~~15~~, 40 C.F.R. § 61.342 (a)]

15.2. Monitoring Requirements

15.2.1. No additional requirements.

15.3. Testing Requirements

15.3.1. An owner or operator shall determine the total annual benzene quantity from facility waste by the following procedure:

(1) For each waste stream subject to 40 C.F.R. Part 61 Subpart FF having a flow-weighted annual average water content greater than 10 percent water, on a volume basis as total water, or is mixed with water or other wastes at any time and the resulting mixture has an annual average water content greater than 10 percent as specified in Section 15.1.2 [40 C.F.R. § 61.342 (a)], the owner or operator shall:

(i) Determine the annual waste quantity for each waste stream using the procedures specified in Section 15.3.2 [40 C.F.R. § 61.355 (b)].

(ii) Determine the flow-weighted annual average benzene concentration for each waste stream using the procedures specified in Section 15.3.3 [40 C.F.R. § 61.355 (c)].

(iii) Calculate the annual benzene quantity for each waste stream by multiplying the annual waste quantity of the waste stream times the flow-weighted annual average benzene concentration.

(2) Total annual benzene quantity from facility waste is calculated by adding together the annual benzene quantity for each waste stream generated during the year and the annual benzene quantity for each process unit turnaround waste annualized according to Section 15.3.2 (1) [40 C.F.R. § 61.355 (b) (4)].

(3) If the total annual benzene quantity from facility waste is equal to or greater than 10 Mg/yr (11 ton/yr), then the owner or operator shall comply with the requirements of 40 C.F.R. § 61.342 (c), (d), or (e).

(4) If the total annual benzene quantity from facility waste is less than 10 Mg/yr (11 ton/yr) but is equal to or greater than 1 Mg/yr (1.1 ton/yr), then the owner or operator shall:

(i) Comply with the recordkeeping requirements of 40 C.F.R. § 61.356 and reporting requirements of 40 C.F.R. § 61.357; and

(ii) Repeat the determination of total annual benzene quantity from facility waste at least once per year and whenever there is a change in the process generating the waste that could cause the total annual benzene quantity from facility waste to increase to 10 Mg/yr (11 ton/yr) or more.

(5) If the total annual benzene quantity from facility waste is less than 1 Mg/yr (1.1 ton/yr), then the owner or operator shall:

(i) Comply with the recordkeeping requirements of 40 C.F.R. § 61.356 and reporting requirements of 40 C.F.R. § 61.357; and

(ii) Repeat the determination of total annual benzene quantity from facility waste whenever there is a change in the process generating the waste that could cause the total annual benzene quantity from facility waste to increase to 1 Mg/yr (1.1 ton/yr) or more.

[45CSR34~~15~~, 40 C.F.R. § 61.355 (a), All Groups]

15.3.2. For purposes of the calculation required by Section 15.3.1 [40 C.F.R. § 61.355 (a)], an owner or operator shall determine the annual waste quantity at the point of waste generation, unless otherwise provided in 40 C.F.R. § 61.355 (b) (1), (2), and (3) and (4), by one of the methods given in Section 15.3.2 (2) – (4) [40 C.F.R. § 61.355 (b) (5) through (7)].

(1) The determination of annual waste quantity for each process unit turnaround waste generated only at 2 year or greater intervals, may be made by dividing the total quantity of waste generated during the most recent process unit turnaround by the time period (in the nearest tenth of a year) between the turnaround resulting in generation of the waste and the most recent preceding process turnaround for the unit. The resulting annual waste quantity shall be included in the calculation of the annual benzene quantity as provided in Section 15.3.1 (1) (iii) [40 C.F.R. § 61.355 (a) (1) (iii)] for the year in which the turnaround occurs and for each subsequent year until the unit undergoes the next process turnaround. For estimates of total annual benzene quantity as specified in the 90-day report, required under Section 15.5.1 (1) [40 C.F.R. § 61.357 (a) (1)], the owner or operator shall estimate the waste quantity generated during the most recent turnaround, and the time period between turnarounds in accordance with good engineering practices. If the owner or operator chooses not to annualize process unit turnaround waste, as specified in this paragraph, then the process unit turnaround waste quantity shall be included in the calculation of the annual benzene quantity for the year in which the turnaround occurs.

(2) Select the highest annual quantity of waste managed from historical records representing the most recent 5 years of operation or, if the facility has been in service for less than 5 years but at least 1 year, from historical records representing the total operating life of the facility;

(3) Use the maximum design capacity of the waste management unit; or

(4) Use measurements that are representative of maximum waste generation rates.

[45CSR34~~15~~, 40 C.F.R. §§ 61.355 (b) (4) through (7), All Groups]

15.3.3. For the purposes of the calculation required by Section 15.3.1 [40 C.F.R. § 61.355 (a)], an owner or operator shall determine the flow-weighted annual average benzene concentration in a manner that meets the requirements given in Section 15.3.3 (1) [40 C.F.R. § 61.355 (c) (1)], using either of the methods given in Section 15.3.3 (2) and (3) [40 C.F.R. § 61.355 (c) (2) and (c) (3)].

(1) The determination of flow-weighted annual average benzene concentration shall meet all of the following criteria:

(i) The determination shall be made at the point of waste generation except for the specific cases given in Section 15.3.3 (1) (i) (A) through (C) [40 C.F.R. § 61.355 (c) (1) (i) (A), (C), and (D)].

(A) The determination for sour water streams that are processed in sour water strippers shall be made at the point that the water exits the sour water stripper.

(B) The determination for wastes that are received from offsite shall be made at the point where the waste enters the hazardous waste treatment, storage, or disposal facility.

(C) The determination of flow-weighted annual average benzene concentration for process unit turnaround waste shall be made using either of the methods given in Section 15.3.3 (2) or (3) [40 C.F.R. § 61.355 (c) (2) or (c) (3)]. The resulting flow-weighted annual average benzene concentration shall be included in the calculation of annual benzene quantity as provided in Section 15.3.1 (1) (iii) [40 C.F.R. § 61.355 (a) (1) (iii)] for the year in which the turnaround occurs and for each subsequent year until the unit undergoes the next process unit turnaround.

(ii) Volatilization of the benzene by exposure to air shall not be used in the determination to reduce the benzene concentration.

(iii) Mixing or diluting the waste stream with other wastes or other materials shall not be used in the determination -- to reduce the benzene concentration.

(iv) The determination shall be made prior to any treatment of the waste that removes benzene, except as specified in Section 15.3.3 (1) (i) (A) through (C) [40 C.F.R. § 61.355 (c) (1) (i) (A), (C), and (D)].

(v) For wastes with multiple phases, the determination shall provide the weighted-average benzene concentration based on the benzene concentration in each phase of the waste and the relative proportion of the phases.

(2) *Knowledge of the waste.*

The owner or operator shall provide sufficient information to document the flow-weighted annual average benzene concentration of each waste stream. Examples of information that could constitute knowledge include material balances, records of chemicals purchases, or previous test results provided the results are still relevant to the current waste stream conditions. If test data are used, then the owner or operator shall provide documentation describing the testing protocol and the means by which sampling variability and analytical variability were accounted for in the determination of the flow-weighted annual average benzene concentration for the waste stream. When an owner or operator and the Administrator do not agree on determinations of the flow-weighted annual average benzene concentration based on knowledge of the waste, the procedures under Section 15.3.3 (3) [40 C.F.R. § 61.355 (c) (3)] shall be used to resolve the disagreement.

(3) Measurements of the benzene concentration in the waste stream in accordance with the following procedures:

(i) Collect a minimum of three representative samples from each waste stream. Where feasible, samples shall be taken from an enclosed pipe prior to the waste being exposed to the atmosphere.

(ii) For waste in enclosed pipes, the following procedures shall be used:

(A) Samples shall be collected prior to the waste being exposed to the atmosphere in order to minimize the loss of benzene prior to sampling.

(B) A static mixer shall be installed in the process line or in a by-pass line unless the owner or operator demonstrates that installation of a static mixer in the line is not necessary to accurately determine the benzene concentration of the waste stream.

(C) The sampling tap shall be located within two pipe diameters of the static mixer outlet.

(D) Prior to the initiation of sampling, sample lines and cooling coil shall be purged with at least four volumes of waste.

(E) After purging, the sample flow shall be directed to a sample container and the tip of the sampling tube shall be kept below the surface of the waste during sampling to minimize contact with the atmosphere.

(F) Samples shall be collected at a flow rate such that the cooling coil is able to maintain a waste temperature less than 10 °C (50 °F).

(G) After filling, the sample container shall be capped immediately (within 5 seconds) to leave a minimum headspace in the container.

(H) The sample containers shall immediately be cooled and maintained at a temperature below 10 °C (50 °F) for transfer to the laboratory.

(iii) When sampling from an enclosed pipe is not feasible, a minimum of three representative samples shall be collected in a manner to minimize exposure of the sample to the atmosphere and loss of benzene prior to sampling.

(iv) Each waste sample shall be analyzed using one of the following test methods for determining the benzene concentration in a waste stream:

(A) Method 8020, Aromatic Volatile Organics, in "Test Methods for Evaluating Solid Waste, Physical/Chemical Methods," EPA Publication No. SW-846 (incorporation by reference as specified in 40 C.F.R. § 61.18);

(B) Method 8021, Volatile Organic Compounds in Water by Purge and Trap Capillary Column Gas Chromatography with Photoionization and Electrolytic Conductivity Detectors in Series in "Test Methods for Evaluating Solid Waste, Physical/Chemical Methods," EPA Publication No. SW-846 (incorporation by reference as specified in 40 C.F.R. § 61.18);

(C) Method 8240, Gas Chromatography/Mass Spectrometry for Volatile Organics in "Test Methods for Evaluating Solid Waste, Physical/Chemical Methods," EPA Publication No. SW-846 (incorporation by reference as specified in 40 C.F.R. § 61.18);

(D) Method 8260, Gas Chromatography/Mass Spectrometry for Volatile Organics: Capillary Column Technique in "Test Methods for Evaluating Solid Waste, Physical/Chemical Methods," EPA Publication No. SW-846 (incorporation by reference as specified in 40 C.F.R. § 61.18);

(E) Method 602, Purgeable Aromatics, as described in 40 CFR part 136, Appendix A, Test Procedures for Analysis of Organic Pollutants, for wastewaters for which this is an approved EPA methods; or

(F) Method 624, Purgeables, as described in 40 CFR part 136, Appendix A, Test Procedures for Analysis of Organic Pollutants, for wastewaters for which this is an approved EPA method.

(v) The flow-weighted annual average benzene concentration shall be calculated by averaging the results of the sample analyses as follows:

$$\mathbf{C}[\text{bar}] = (1/Q_t) \times \sum_{i=1}^{n} Q_i C_i$$

Where:

C[bar]	=	Flow-weighted annual average benzene concentration for waste stream, ppmw.
Q_t	=	Total annual waste quantity for waste stream, kg/yr (lb/yr).
N	=	Number of waste samples (at least 3).
Q_I	=	Annual waste quantity for waste stream represented by Ci, kg/yr (lb/yr).
C_I	=	Measured concentration of benzene in waste sample i, ppmw.

[45CSR34~~15~~, 40 C.F.R. § 61.355 (c), All Groups]

15.4. Recordkeeping Requirements

15.4.1. Each owner or operator of a facility subject to the provisions of 40 C.F.R. Part 61 Subpart FF shall comply with the recordkeeping requirements of 40 C.F.R. § 61.356. Each record shall be maintained in a readily accessible location at the facility site for a period not less than two years from the date the information is recorded unless otherwise specified.
[45CSR34~~15~~, 40 C.F.R. § 61.356 (a)]

15.4.2. Each owner or operator shall maintain records that identify each waste stream at the facility subject to 40 C.F.R. Part 61 Subpart FF, and indicate whether or not the waste stream is controlled for benzene emissions in accordance with 40 C.F.R. Part 61 Subpart FF. In addition the owner or operator shall maintain the following records:

(1) For each waste stream not controlled for benzene emissions in accordance with 40 C.F.R. Part 61 Subpart FF, the records shall include all test results, measurements, calculations, and other documentation used to determine the following information for the waste stream: waste stream identification, water content, whether or not the waste stream is a process wastewater stream, annual waste quantity, range of benzene concentrations, annual average flow-weighted benzene concentration, and annual benzene quantity.

(2) For each facility where the annual waste quantity for process unit turnaround waste is determined in accordance with Section 15.3.2 (2) [40 C.F.R. § 61.355 (b) (5)], the records shall include all test results, measurements, calculations, and other documentation used to determine the following information: identification of each process unit at the facility that undergoes turnarounds, the date of the most recent turnaround for each process unit, identification of each process unit turnaround waste, the water content of each process unit turnaround waste, the annual waste quantity determined in accordance with Section 15.3.2 (2) [40 C.F.R. § 61.355 (b) (5)], the range of benzene concentrations in the waste, the annual average flow-weighted benzene concentration of the waste, and the annual benzene quantity calculated in accordance with Section 15.3.1 (1) (iii) [40 C.F.R. § 61.355 (a) (1) (iii)].

[45CSR34~~15~~, 40 C.F.R. § 61.356 (b) (1) and (5)]

15.5. Reporting Requirements

15.5.1. If the total annual benzene quantity from facility waste is less than 10 Mg/yr (11 ton/yr) but is equal to or greater than 1 Mg/yr (1.1 ton/yr), then the owner or operator shall submit to the Administrator a report that updates the information listed in 40 C.F.R. § 61.357 (a) (1) through (3). The report shall be submitted annually and whenever there is a change in the process generating the waste stream that could cause the total annual benzene quantity from facility waste to increase to 10 Mg/yr (11 ton/yr) or more. If the information in the annual report required by 40 C.F.R. § 61.357 (a) (1) through (3) is not changed in the following year, the owner or operator may submit a statement to that effect.
[45CSR34~~15~~, 40 C.F.R. § 61.357 (c)]

16.0. Source-Specific Requirements [Sections of 40 C.F.R. Part 63 Subpart F - National Emission Standards for Hazardous Air Pollutants from Synthetic Organic Chemical Manufacturing Industries - Applicable to this Facility; Equipment in Naphthalene Service - Groups 005, 009, 00A]

16.1. Limitations and Standards

Applicability

16.1.1. 40 C.F.R. Part 63 Subpart F provides applicability provisions, definitions, and other general provisions that are applicable to 40 C.F.R. Part 63 Subparts G and H. Section 16.1.1 does require compliance certification. **[45CSR34, 40 C.F.R. § 63.100 (a), 45CSR13, R13-2274, 4.1.23., Group 005, 009, 00A ~~(#32 Column Vent VT32) Group (LR2-2) Group and 00B (Tanks 7, 9, 83, 623, and 3N)~~]**

16.1.2. Except as provided in 40 C.F.R. §§ 63.100 (b) (4) and (c), the provisions of 40 C.F.R. Part 63 Subparts F, G, and H apply to chemical manufacturing process units that meet all the criteria specified in Section 16.1.2 (1), (2), and (3) [40 C.F.R. §§ 63.100 (b) (1), (b) (2), and (b) (3)]:

(1) Manufacture as a primary product one or more of the chemicals listed in Table 1 of 40 C.F.R. Part 63 Subpart F, 40 C.F.R. § 63.100 (b) (1) (i). Koppers manufactures naphthalene as a primary product at the Naphthalene Distillation Unit.

(2) Use as a reactant or manufacture as a product, or co-product, one or more of the organic hazardous air pollutants listed in Table 2 of 40 C.F.R. Part 63 Subpart F. Koppers manufactures naphthalene as a primary product at the Naphthalene Distillation Unit.

(3) These facilities are located at a major source as defined in Section 112(a) of the CAA. The Follansbee Tar Plant site is a major source as defined in section 112(a) of the Clean Air Act.

Section 16.1.2 does require compliance certification.

[45CSR34, 40 C.F.R. §§ 63.100 (b) (1), (2), and (3), Groups 005, 009, 00A ~~(#32 Column Vent VT32) Group (LR2-2) Group and 00B (Tanks 7, 9, 83, 623, and 3N)~~]

16.1.3. The source to which 40 C.F.R. Part 63 Subpart F applies is the collection of all chemical manufacturing process units and the associated equipment at a major source that meet the criteria specified in Section 16.1.2 [40 C.F.R. § 63.100 (b)]. The source includes the process vents; storage vessels; transfer racks; waste management units; maintenance wastewater; heat exchange systems; equipment identified in 40 C.F.R. § 63.149; and pumps, compressors, agitators, pressure relief devices, sampling connection systems, open-ended valves or lines, valves, connectors, instrumentation systems, surge control vessels, and bottoms receivers that are associated with that collection of chemical manufacturing process units. The source also includes equipment required by, or utilized as a method of compliance with, 40 C.F.R. Part 63 Subparts F, G, or H which may include control devices and recovery devices.

(1) 40 C.F.R. Part 63 Subpart F applies to maintenance wastewater and heat exchange systems within a source that is subject to 40 C.F.R. Part 63 Subpart F.

(2) 40 C.F.R. Part 63 Subpart F and Subpart G apply to process vents, storage vessels, transfer racks, equipment identified in 40 C.F.R. § 63.149 of 40 C.F.R. Part 63 Subpart G, and wastewater streams and associated treatment residuals within a source that is subject to 40 C.F.R. Part 63 Subpart F.

(3) 40 C.F.R. Part 63 Subpart F and Subpart H apply to pumps, compressors, agitators, pressure relief devices, sampling connection systems, open-ended valves or lines, valves, connectors,

instrumentation systems, surge control vessels, and bottoms receivers within a source that is subject to 40 C.F.R. Part 63 Subpart F. If specific items of equipment, comprising part of a chemical manufacturing process unit subject to 40 C.F.R. Part 63 Subpart F, are managed by different administrative organizations (e.g., different companies, affiliates, departments, divisions, etc.), those items of equipment may be aggregated with any chemical manufacturing process unit within the source for all purposes under 40 C.F.R. Part 63 Subpart H, providing there is no delay in the applicable compliance date in 40 C.F.R. § 63.100 (k).

Section 16.1.3 does require compliance certification.

[45CSR34, 40 C.F.R. § 63.100 (e), Groups 005, 009, 00A ~~(#32 Column Vent VT32) Group (LR2-2) Group and 00B (Tanks 7, 9, 83, 623, and 3N)~~]]

Definitions

16.1.4. Koppers Inc. Follansbee Tar Plant's Naphthalene Distillation Unit, a Chemical Manufacturing Process Unit, consists of following emission sources as defined:

Process vent means the point of discharge to the atmosphere (or the point of entry into a control device, if any) of a gas stream if the gas stream has the characteristics specified in Sections 16.1.7 through 16.1.13 [40 C.F.R. §§ 63.107 (b) through (h)], or meets the criteria specified in Section 16.1.14 [40 C.F.R. § 63.107 (i)]. For purposes of 40 C.F.R. §§ 63.113 through 63.118, all references to the characteristics of a process vent (e.g., flow rate, total HAP concentration, or TRE index value) shall mean the characteristics of the gas stream.
(Process Vent --- #32 Column Vent VT32 ~~(005-01)~~)

Storage vessel (7means a tank or other vessel that is used to store organic liquids that contain one or more of the organic HAP's listed (Naphthalene) in table 2 of 40 C.F.R. Part Subpart F and that has been assigned, according to the procedures in 40 C.F.R. § 63.100 (g), to a chemical manufacturing process unit that is subject to 40 C.F.R. Part Subpart F. Storage vessel does not include:

(1) Vessels permanently attached to motor vehicles such as trucks, railcars, barges, or ships;

(2) Pressure vessels designed to operate in excess of 204.9 kilopascals and without emissions to the atmosphere;

(3) Vessels with capacities smaller than 38 cubic meters;

(4) Vessels storing organic liquids that contain organic hazardous air pollutants only as impurities;

(5) Bottoms receiver tanks;

(6) Surge control vessels; or

(7) Wastewater storage tanks. Wastewater storage tanks are covered under the wastewater provisions.

(Storage Vessels - - - Group 00A ~~Tanks 7, 9, 83, 623, and 3N~~)

Loading rack means a single system used to fill tank trucks and railcars at a single geographic site. Loading equipment and operations that are physically separate (i.e., do not share common piping, valves, and other equipment) are considered to be separate loading racks.
(Loading Rack --- Group 009 ~~LR2-2~~)

Equipment leak means emissions of organic hazardous air pollutants from a connector, pump, compressor, agitator, pressure relief device, sampling connection system, open-ended valve or line, valve, surge control vessel, bottoms receiver, or instrumentation system in organic hazardous air pollutant service as defined in 40 C.F.R. § 63.161.

Wastewater is not generated by the Naphthalene Distillation Unit, a Chemical Manufacture Process Unit (CMPU).

Naphthalene Column does vent to the atmosphere and therefore it is not an emission source.

Section 16.1.4 does require compliance certification.

[45CSR34, 40 C.F.R. § 63.101 (b), Groups 005, 009, 00A ~~(#32 Column Vent VT32) Group (LR2-2) Group and 00B (Tanks 7, 9, 83, 623, and 3N)~~]

General Standards

16.1.5. Owners and operators of sources subject to 40 C.F.R. Part 63 Subpart F shall comply with the requirements of 40 C.F.R. Part 63 Subpart G and Subpart H.

(1) The provisions set forth in 40 C.F.R. Part 63 Subpart F and Subpart G shall apply at all times except during periods of start-up or shutdown (as defined in 40 C.F.R. § 63.101 of 40 C.F.R. Part 63 Subpart F), malfunction, or non-operation of the chemical manufacturing process unit (or specific portion thereof) resulting in cessation of the emissions to which 40 C.F.R. Part 63 Subpart F and Subpart G apply. However, if a start-up, shutdown, malfunction or period of non-operation of one portion of a chemical manufacturing process unit does not affect the ability of a particular emission point to comply with the specific provisions to which it is subject, then that emission point shall still be required to comply with the applicable provisions of 40 C.F.R. Part 63 Subpart F and Subpart G during the start-up, shutdown, malfunction or period of non-operation. For example, if there is an overpressure in the reactor area, a storage vessel in the chemical manufacturing process unit would still be required to be controlled in accordance with 40 C.F.R. § 63.119 . Similarly, the degassing of a storage vessel would not affect the ability of a process vent to meet the requirements of 40 C.F.R. § 63.113.

(2) The provisions set forth in 40 C.F.R. Part 63 Subpart H shall apply at all times except during periods of start-up or shutdown, malfunction, process unit shutdown (as defined in 40 C.F.R. § 63.161), or non-operation of the chemical manufacturing process unit (or specific portion thereof) in which the lines are drained and depressurized resulting in cessation of the emissions to which 40 C.F.R. Part 63 Subpart H applies.

(3) The owner or operator shall not shut down items of equipment that are required or utilized for compliance with the provisions of 40 C.F.R. Part 63 Subpart F, 40 C.F.R. Part 63 Subpart G, or 40 C.F.R. Part 63 Subpart H during times when emissions (or, where applicable, wastewater streams or residuals) are being routed to such items of equipment, if the shutdown would contravene requirements of 40 C.F.R. Part 63 Subpart F, 40 C.F.R. Part 63 Subpart G, or 40 C.F.R. Part 63 Subpart H applicable to such items of equipment. 40 C.F.R. § 63.102 does not apply if the item of equipment is malfunctioning, or if the owner or operator must shut down the equipment to avoid damage due to a contemporaneous start-up, shutdown, or malfunction of the chemical manufacturing process unit or portion thereof.

(4) During start-ups, shutdowns, and malfunctions when the requirements of 40 C.F.R. Part 63 Subpart F, 40 C.F.R. Part 63 Subpart G, and/or 40 C.F.R. Part 63 Subpart H do not apply pursuant to Section 16.1.5 (1) through (3) [40 C.F.R. § 63.102 (a) (1) through (3)], the owner or operator shall implement, to the extent reasonably available, measures to prevent or minimize excess emissions to the extent practical. For purposes of 40 C.F.R. § 63.102, the term "excess emissions" means emissions in excess of those that would have occurred if there were no start-up, shutdown, or malfunction and the owner or operator complied with the relevant provisions of 40 C.F.R. Part 63 Subpart F, 40 C.F.R. Part 63 Subpart G, and/or 40 C.F.R. Part 63 Subpart H. The measures to be taken shall be identified in the applicable start-up, shutdown, and malfunction plan, and may include, but are not limited to, air pollution control technologies, recovery technologies, work practices, pollution prevention, monitoring, and/or changes in the manner of operation of the source. Back-up control devices are not required, but may be used if available.

[45CSR34, 40 C.F.R. § 63.102 (a), Groups 005, 009, 00A ~~(#32 Column Vent VT32) Group (LR2-2) Group- and 00B (Tanks 7, 9, 83, 623, and 3N)~~]

Identification of Process Vents

16.1. 6. The owner or operator shall use the criteria specified in 40 C.F.R. § 63.107 to determine whether there are any process vents associated with an air oxidation reactor, distillation unit, or reactor that is in a source subject to 40 C.F.R. Part 63 Subpart F. A process vent is the point of discharge to the atmosphere (or the point of entry into a control device, if any) of a gas stream if the gas stream has the characteristics specified in Sections 16.1.7 through 16.1.13 [40 C.F.R. § 63.107 (b) through (h)], or meets the criteria specified in Section 16.1.14 [40 C.F.R. § 63.107 (i)].
[45CSR34, 40 C.F.R. § 63.107 (a), Group 005]

16.1.7. Some, or all, of the gas stream originates as a continuous flow from an air oxidation reactor, distillation unit, or reactor during operation of the chemical manufacturing process unit. Section 16.1.7 does require compliance certification.
[45CSR34, 40 C.F.R. § 63.107 (b), Group 005]

16.1.8. The discharge to the atmosphere (with or without passing through a control device) meets at least one of the conditions specified in Sections 16.1.8 (1) through (3) [40 C.F.R. §§ 63.107 (c) (1) through (3)]. Section 16.1.8 does require compliance certification.

(1) Is directly from an air oxidation reactor, distillation unit, or reactor; or

(2) Is from an air oxidation reactor, distillation unit, or reactor after passing solely (*i.e.*, without passing through any other unit operation for a process purpose) through one or more recovery devices within the chemical manufacturing process unit; or

(3) Is from a device recovering only mechanical energy from a gas stream that comes either directly from an air oxidation reactor, distillation unit, or reactor, or from an air oxidation reactor, distillation unit, or reactor after passing solely (*i.e.*, without passing through any other unit operation for a process purpose) through one or more recovery devices within the chemical manufacturing process unit.

[45CSR34, 40 C.F.R. § 63.107 (c), Group 005]

16.1.9. The gas stream contains greater than 0.005 weight percent total organic HAP at the point of discharge to the atmosphere (or at the point of entry into a control device, if any). Section 16.1.9 does require compliance certification.
[45CSR34, 40 C.F.R. § 63.107 (d), Group 005]

16.1.10. The air oxidation reactor, distillation unit, or reactor is part of a chemical manufacturing process unit that meets the criteria of Section 16.1.7 [40 C.F.R. § 63.100 (b)]. Section 16.1.10 does require compliance certification.
[45CSR34, 40 C.F.R. § 63.107 (e), Group 005]

16.1.11. The gas stream is in the gas phase from the point of origin at the air oxidation reactor, distillation unit, or reactor to the point of discharge to the atmosphere (or to the point of entry into a control device, if any). Section 16.1.11 does require compliance certification.
[45CSR34, 40 C.F.R. § 63.107 (f), Group 005]

16.1.12. The gas stream is discharged to the atmosphere either on-site, off-site, or both. Section 16.1.12 does require compliance certification.
[45CSR34, 40 C.F.R. § 63.107 (g), Group 005]

16.1.13. The gas stream is not any of the items identified in Section 16.1.13 (1) through (9) [40 C.F.R. §§ 63.107 (h) (1) through (9)].

(1) A relief valve discharge.

(2) A leak from equipment subject to 40 C.F.R. Part 63 Subpart H.

(3) A gas stream going to a fuel gas system as defined in 40 C.F.R. § 63.101.

(4) A gas stream exiting a control device used to comply with 40 C.F.R. § 63.113.

(5) A gas stream transferred to other processes (on-site or off-site) for reaction or other use in another process (*i.e.*, for chemical value as a product, isolated intermediate, byproduct, or coproduct, or for heat value).

(6) A gas stream transferred for fuel value (*i.e.*, net positive heating value), use, reuse, or for sale for fuel value, use, or reuse.

(7) A storage vessel vent or transfer operation vent subject to 40 C.F.R. § 63.119 or 40 C.F.R. § 63.126.

(8) A vent from a waste management unit subject to 40 C.F.R. §§ 63.132 through 63.137.

9) A gas stream exiting an analyzer.

Section 16.1.13 does require compliance certification.

[45CSR34, 40 C.F.R. § 63.107 (h), Group 005]

16.1.14. The gas stream would meet the characteristics specified in Sections 16.1.7 through 16.1.12 [40 C.F.R. §§ 63.107 (b) through (g)], but, for purposes of avoiding applicability, has been deliberately interrupted, temporarily liquefied, routed through any item of equipment for no process purpose, or disposed of in a flare that does not meet the criteria in 40 C.F.R. § 63.11 (b), or an incinerator that does not reduce emissions of organic HAP by 98 percent or to a concentration of 20 parts per million by volume, whichever is less stringent. Section 16.1.14 does require compliance certification.
[45CSR34, 40 C.F.R. § 63.107 (i), Group 005]

16.2. Monitoring Requirements

16.2.1. No additional requirements.

16.3. Testing Requirements

16.3.1. No additional requirements.

16.4. Recordkeeping Requirements

16.4.1. Each owner or operator of a source subject to 40 C.F.R. Part 63 Subpart F, 40 C.F.R. Part 63 Subpart G, and 40 C.F.R. Part 63 Subpart H shall keep copies of all applicable reports and records required by 40 C.F.R. Part 63 Subpart F, 40 C.F.R. Part 63 Subpart G, and 40 C.F.R. Part 63 Subpart H for at least 5 years; except that, if 40 C.F.R. Part 63 Subpart G or 40 C.F.R. Part 63 Subpart H require records to be maintained for a time period different than 5 years, those records shall be maintained for the time specified in 40 C.F.R. Part 63 Subpart G or 40 C.F.R. Part 63 Subpart H. If an owner or operator submits copies of reports to the applicable EPA Regional Office, the owner or operator is not required to maintain copies of reports. If the EPA Regional Office has waived the requirement of 40 C.F.R. § 63.10 (a) (4) (ii) for submittal of copies of reports, the owner or operator is not required to maintain copies of reports.

(1) All applicable records shall be maintained in such a manner that they can be readily accessed. The most recent 6 months of records shall be retained on site or shall be accessible from a central location by computer or other means that provides access within 2 hours after a request. The remaining four and one-half years of records may be retained offsite. Records may be maintained in hard copy or computer-readable form including, but not limited to, on paper, microfilm, computer, floppy disk, magnetic tape, or microfiche.

(2) The owner or operator subject to 40 C.F.R. Part 63 Subpart F, 40 C.F.R. Part 63 Subpart G and 40 C.F.R. Part 63 Subpart H shall keep the records specified in 40 C.F.R. § 63.103, as well as records specified in 40 C.F.R. Part 63 Subparts G and H.

(3) Records of start-up, shutdown and malfunction and continuous monitoring system calibration and maintenance are not required if they pertain solely to Group 2 emission points, as defined in 40 C.F.R. § 63.111, that are not included in an emissions average.

[45CSR34, 40 C.F.R. § 63.103 (c), Groups 005, 009, 00A ~~#32 Column Vent VT32, LR2-2, Tanks 7, 9, 83, 623, and 3N~~]

16.4.2. The owner or operator of a chemical manufacturing process unit which meets the criteria of 40 C.F.R. § 63.100 (b) (1) and (3), but not the criteria of 40 C.F.R. § 63.100 (b) (2), shall comply with the requirements of either Section 16.4.2 (1) or (2) [40 C.F.R. § 63.103 (e) (1) or (e) (2)].

(1) Retain information, data, and analysis used to determine that the chemical manufacturing process unit does not use as a reactant or manufacture as a product or co-product any organic hazardous air pollutant. Examples of information that could document this include, but are not limited to, records of chemicals purchased for the process, analyses of process stream composition, engineering calculations, or process knowledge.

(2) When requested by the Administrator, demonstrate that the chemical manufacturing process unit does not use as a reactant or manufacture as a product or co-product any organic hazardous air pollutant.

[45CSR34, 40 C.F.R. § 63.103 (e), Groups 005, 009, 00A ~~#32 Column Vent VT32, LR2-2, Tanks 7, 9, 83, 623, and 3N~~]

16.5. Reporting Requirements

16.5.1. All reports required under 40 C.F.R. Part 63 Subpart F, 40 C.F.R. Part 63 Subpart G and 40 C.F.R. Part 63 Subpart H shall be sent to the Administrator at the addresses listed in 40 C.F.R. § 63.13, except that requests for permission to use an alternative means of compliance as provided for in 40 C.F.R. § 63.102 (b) and application for approval of a nominal efficiency as provided for in 40 C.F.R. § 63.150 (i) (1) through (i) (6) shall be submitted to the Director of the EPA Office of Air Quality Planning and Standards rather than to the Administrator or delegated authority.

(1) Wherever 40 C.F.R. Part 63 Subpart A of this part specifies "postmark" dates, submittals may be sent by methods other than the U.S. Mail (e.g., by fax or courier). Submittals shall be sent on or before the specified date.

(2) If acceptable to both the Administrator and the owner or operator of a source, reports may be submitted on electronic media.

[45CSR34, 40 C.F.R. § 63.103 (d), Group 005, Groups 005, 009, 00A ~~#32 Column Vent VT32, LR2-2, Tanks 7, 9, 83, 623, and 3N~~]

17.0. Source-Specific Requirements [Sections of 40 C.F.R. Part 63 Subpart G - National Emission Standards for Hazardous Air Pollutants from Synthetic Organic Chemical Manufacturing Industry for Process Vents, Storage Vessels, Transfer Operations and Wastewater - Applicable to this Facility; Equipment in Naphthalene Service - Groups 005, 009, 00A]

17.1. Limitations and Standards

Applicability

17.1.1. 40 C.F.R. Part 63 Subpart G applies to all process vents, storage vessels, transfer racks, wastewater streams, and in-process equipment subject to 40 C.F.R. § 63.149 within a source subject to 40 C.F.R. Part 63 Subpart F. Section 17.1.1 does require compliance certification.
[45CSR34, 40 C.F.R. § 63.110 (a), 45CSR13, R13- 2274, 4.1.23 ~~Group 005~~]

Definitions

17.1.2. Koppers Inc. Follansbee Tar Plant has determined that the solvent column as a Group 2 process vent, Tanks 7, 9, 83, 623, and 3N were determined to be Group 2 storage vessels, and the loading rack LR2-2 was determined to be a Group 2 transfer rack. Koppers has also determined there is no wastewater associated with the Naphthalene distillation Unit (Group 005). Group 2 process vent, Group 2 storage vessel, and Group 2 transfer rack are defined as:

Group 2 process vent means a process vent for which the vent stream flow rate is less than 0.005 standard cubic meter per minute, the total organic HAP concentration is less than 50 parts per million by volume or the total resource effectiveness (TRE) index value, calculated according to 40 C.F.R. § 63.115, is greater than 1.0. Koppers calculated their TRE index value of the solvent column at 4.0.

Group 2 storage vessel means a storage vessel that does not meet the definition of a Group 1 storage vessel. A Group 1 storage vessel for an existing facility is a storage vessel with either:

- A vessel capacity greater than or equal to 75 cubic meters (m^3) (19,813 gallons), but less than 151 m^3 (39,889 gallons), with a maximum true vapor pressure greater than or equal to 13.1 kiloPascals (kPa), or 1.9 pounds per square inch (psia); or
- A vessel capacity greater than 151 m^3 (38,889 gallons) with a maximum true vapor pressure greater than or equal to 5.2 kPa, or 0.75 psia

The capacities, service, liquid storage temperatures and maximum true vapor pressures for Storage Vessels 7, 9, 83, 623, and 3N are as follows:

Vessel ID Number	Vessel Service	Vessel Capacity Gallons	Typical Liquid Storage Temperature °F	Maximum True Vapor Pressure PSIA
~~(00B-1Y)~~ Tank 7	Benzene ~~Acid~~ Free Chemical Oil	639,765	180	<0.75
~~(00B-1Z)~~ Tank 9	Benzene ~~Acid~~ Free Chemical Oil	514,077	180	<0.75
83	Naphthalene	105,797	230	<0.75
623	Naphthalene	454,251	230	<0.75
3N	Naphthalene (Slop)	25,561	230	<0.75

Group 2 transfer rack is a transfer rack that does not meet the definition of a Group 1 transfer rack. A Group 1 transfer rack is a transfer rack that annually loads greater than 0.65 million liter (171,711.8 gallons) of liquid products that contain organic hazardous air pollutants with a rack weighted average vapor pressure greater than or equal to 10.3 kilopascals (1.49 PSIA).

Total resource effectiveness index value or *TRE index value* means a measure of the supplemental total resource requirement per unit reduction of organic HAP associated with a process vent stream, based on vent stream flow rate, emission rate of organic HAP, net heating value, and corrosion properties (whether or not the vent stream contains halogenated compounds), as quantified by the equations given under 40 C.F.R. § 63.115.

Note: The design process vent flow rate of the solvent column is greater than 0.005 scmm and the organic HAP concentration is greater than 50 ppmv. However, the TRE index value is greater than 1.0. Therefore, the Solvent Column is a Group 2 process vent. Furthermore, since the TRE index value is greater than 4.0, measurements are not required to determine the flow rate, molar composition and net heating value of the process vent gas stream.

Section 17.1.2 does require compliance certification.

[45CSR34, 40 C.F.R. § 63.111, Group 005, ~~Group~~ 009, ~~Group~~ 00A ~~(#32 Column Vent VT32) (LR2-2) and 00B (Tanks 7, 9, 83, 623, and 3N)~~]

Standards

17.1.3. The owner or operator of an existing source subject to the requirements of 40 C.F.R. Part 63 Subpart G shall control emissions of organic HAP's**.** Koppers is using Section 17.1.4 [40 C.F.R. § 63.112 (e)] to comply with Section 17.1.3 and is not required to calculate the emission rate in 40 C.F.R. § 63.112 (a).
[45CSR34, 40 C.F.R. § 63.112 (a), Group 005, ~~Group~~ 009, ~~Group~~ 00A ~~(#32 Column Vent VT32) (LR2-2) and 00B (Tanks 7, 9, 83, 623, and 3N)~~]

17.1.4. The owner or operator of an existing or new source may comply with the process vent provisions in 40 C.F.R. §§ 63.113 through 63.118, the storage vessel provisions in 40 C.F.R. §§ 63.119 through 63.123, the transfer operation provisions in 40 C.F.R. §§ 63.126 through 63.130, the wastewater provisions in 40 C.F.R. §§ 63.131 through 63.147, the leak inspection provisions in 40 C.F.R. § 63.148, and the provisions in 40 C.F.R. § 63.149.

(1) The owner or operator using this compliance approach shall also comply with the requirements of 40 C.F.R. § 63.151 and 40 C.F.R. § 63.152, as applicable.

(2) The owner or operator using this compliance approach is not required to calculate the annual emission rate specified in 40 C.F.R. § 63.112 (a).

[45CSR34, 40 C.F.R. § 63.112 (e), Group 005, ~~Group~~ 009, ~~Group~~ 00A ~~(#32 Column Vent VT32) (LR2-2) and 00B (Tanks 7, 9, 83, 623, and 3N)~~]

17.1.5. A State may restrict the owner or operator of an existing source to using only the procedures in Section 17.1.4 [40 C.F.R. § 63.112 (e)] to comply with the emission standard in 40 C.F.R. § 63.112 (a). Section 17.1.5 does require compliance certification.
[45CSR34, 40 C.F.R. § 63.112 (g), Group 005, ~~Group~~ 009, ~~Group~~ 00A ~~(#32 Column Vent VT32) (LR2-2) and 00B (Tanks 7, 9, 83, 623, and 3N)~~]

17.1.6. Where the provisions of 40 C.F.R. Part 63 Subpart G require a performance test, waiver of that requirement shall be addressed only as provided in 40 C.F.R. § 63.103 (b) (5). Section 17.1.6 does require compliance certification.

[45CSR34, 40 C.F.R. § 63.112 (h), Group 005, ~~Group~~ 009, ~~Group~~ 00A ~~(#32 Column Vent VT32) (LR2-2) and 00B (Tanks 7, 9, 83, 623, and 3N)~~]

Process Vent Provisions

17.1.7. The owner or operator of a Group 2 process vent with a TRE index value greater than 4.0 shall maintain a TRE index value greater than 4.0, comply with the provisions for calculation of a TRE index value in 40 C.F.R. § 63.115 and the reporting and recordkeeping provisions in Sections 17.4.1, 17.4.2 and 17.5.2 [40 C.F.R. §§ 63.117 (b) and 63.118 (c) and (h)], and is not subject to monitoring or any other provisions of 40 C.F.R. § 63.114 through 40 C.F.R. § 63.118.

[45CSR34, 40 C.F.R. § 63.113 (e), Group 005, ~~Group~~ 009, ~~Group~~ 00A ~~(#32 Column Vent VT32) (LR2-2) and 00B (Tanks 7, 9, 83, 623, and 3N)~~]

17.1.8. Notwithstanding any other provisions of 40 C.F.R. Part 63 Subpart G, in any case where a process vent includes one or more gas streams that are not from a source subject to 40 C.F.R. Part 63 Subpart G (hereafter called "non-HON streams" for purposes of Section 17.1.8 [40 C.F.R. § 63.115 (f)]), and one or more gas streams that meet the criteria in Sections 17.1.7 through 17.1.13 [40 C.F.R. § 63.107(b) through (h)] or the criteria in Section 17.1.14 [40 C.F.R. § 63.107(i)] (hereafter called "HON streams" for purposes of Section 17.1.8 [40 C.F.R. § 63.115 (f)]), the owner or operator may elect to comply with Sections 17.1.8 (1) through (3) [40 C.F.R. § 63.115 (f) (1) through (3)].

(1) The owner or operator may determine the characteristics (flow rate, total organic HAP concentration, and TRE index value) for each HON stream, or combination of HON streams, at a representative point as near as practical to, but before, the point at which it is combined with one or more non-HON streams.

(2) If one or more of the HON streams, or combinations of HON streams, has the characteristics (determined at the location specified in Sections 17.1.8 (1) [40 C.F.R. § 63.115 (f) (1)]) associated with a Group 1 process vent, the combined vent stream is a Group 1 process vent. Except as specified in Sections 17.1.8 (3) [40 C.F.R. § 63.115 (f) (3)], if none of the HON streams, or combinations of HON streams, when determined at the location specified in Sections 17.1.8 (1) [40 C.F.R. § 63.115 (f) (1)], has the characteristics associated with a Group 1 process vent, the combined vent stream is a Group 2 process vent regardless of the TRE index value determined at the location specified in 40 C.F.R. § 63.115 (a). If the combined vent stream is a Group 2 process vent as determined by the previous sentence, but one or more of the HON streams, or combinations of HON streams, has a TRE index value greater than 1 but less than or equal to 4, the combined vent stream is a process vent with a TRE index value greater than 1 but less than or equal to 4. In this case, the owner or operator shall monitor the combined vent stream as required by 40 C.F.R. § 63.114 (b).

(3) Sections 17.1.8 (1) and (2) [40 C.F.R. § 63.115 (f) (1) and (2)] are not intended to apply instead of any other 40 C.F.R. Part 63. If another 40 C.F.R. Part 63 applies to one or more of the non-HON streams contributing to the combined vent stream, that 40 C.F.R. Part 63 may impose emission control requirements such as, but not limited to, requiring the combined vent stream to be classified and controlled as a Group 1 process vent.

[45CSR34, 40 C.F.R. § 63.115 (f), Group 005, Group 009, Group 00A ~~(#32 Column Vent VT32) (LR2-2) and 00B (Tanks 7, 9, 83, 623, and 3N)~~]

Storage Vessel Provisions

17.1.9. For each Group 2 storage vessel that is not part of an emissions average as described in 40 C.F.R. § 63.150, the owner or operator shall comply with the recordkeeping requirement in Section 17.4.3 [40 C.F.R. § 63.123 (a)] and is not required to comply with any other provisions in 40 C.F.R. §§ 63.119 through 63.123.
[45CSR34, 40 C.F.R. §§ 63.119 (a) (3), Group 00A ~~and 00B (Tanks 7, 9, 83, 623, and 3N)~~]

Transfer Rack Provisions

17.1.10. For each Group 2 transfer rack, the owner or operator shall maintain records as required in Section 17.4.4 [40 C.F.R. § 63.130 (f)]. No other provisions for transfer racks apply to the Group 2 transfer rack.
[45CSR34, 40 C.F.R. § 63.126 (c), Group 009 ~~(Loading Rack, LR2-2)~~]

17.2. Monitoring Requirements

17.2.1. To determine the TRE index value, the owner or operator shall conduct a TRE determination and calculate the TRE index value according to the procedures in Sections 17.2.1 (1) or (2) [40 C.F.R. §§ 63.115 (d) (1) or (d) (2)] and the TRE equation in Section 17.2.1 (3) [40 C.F.R. § 63.115 (d) (3)].

(1) Engineering assessment may be used to determine vent stream flow rate, net heating value, TOC emission rate, and total organic HAP emission rate for the representative operating condition expected to yield the lowest TRE index value.

(i) If the TRE value calculated using such engineering assessment and the TRE equation in Section 17.2.1 (3) [40 C.F.R. § 63.115 (d) (3)] is greater than 4.0, then the owner or operator is not required to perform the measurements specified in 17.2.1 (2) [40 C.F.R. § 63.115 (d) (2)].

(ii) If the TRE value calculated using such engineering assessment and the TRE equation in Section 17.2.1 (3) [40 C.F.R. § 63.115 (d) (3)] is less than or equal to 4.0, then the owner or operator is required to perform the measurements specified in Section 17.2.1 (2) [40 C.F.R. § 63.115 (d) (2)] for group determination or consider the process vent a Group 1 vent and comply with the emission reduction specified in 40 C.F.R. § 63.113 (a).

(iii) Engineering assessment includes, but is not limited to, the following:

(A) Previous test results provided the tests are representative of current operating practices at the process unit.

(B) Bench-scale or pilot-scale test data representative of the process under representative operating conditions.

(C) Maximum flow rate, TOC emission rate, organic HAP emission rate, or net heating value limit specified or implied within a permit limit applicable to the process vent.

(D) Design analysis based on accepted chemical engineering principles, measurable process parameters, or physical or chemical laws or properties. Examples of analytical methods include, but are not limited to:

(*1*) Use of material balances based on process stoichiometry to estimate maximum organic HAP concentrations,

(*2*) Estimation of maximum flow rate based on physical equipment design such as pump or blower capacities,

(*3*) Estimation of TOC or organic HAP concentrations based on saturation

conditions,

(*4*) Estimation of maximum expected net heating value based on the vent stream concentration of each organic compound or, alternatively, as if all TOC in the vent stream were the compound with the highest heating value.

(E) All data, assumptions, and procedures used in the engineering assessment shall be documented.

(2) Except as provided in Section 17.2.1 (1) [40 C.F.R. § 63.115 (d) (1)], vent stream flow rate, net heating value, TOC emission rate, and total organic HAP emission rate shall be measured and calculated according to the procedures in Section 17.2.1 (2) (i) through (v) [40 C.F.R. § 63.115 (d) (2) (i) through (v)] and used as input to the TRE index value calculation in Section 17.2.1 (3) [40 C.F.R. § 63.115 (d) (3)].

(i) The vent stream volumetric flow rate (Q_s), in standard cubic meters per minute at 20 degrees Celcius, shall be determined using Method 2, 2A, 2C, or 2D of 40 C.F.R. Part 60, Appendix A, as appropriate. If the vent stream tested passes through a final steam jet ejector and is not condensed, the vent stream volumetric flow shall be corrected to 2.3 percent moisture.

(ii) The molar composition of the vent stream, which is used to calculate net heating value, shall be determined using the following methods:

(A) Method 18 of 40 C.F.R. Part 60, Appendix A to measure the concentration of each organic compound.

(B) American Society for Testing and Materials D1946–77 to measure the concentration of carbon monoxide and hydrogen.

(C) Method 4 of 40 C.F.R. Part 60, Appendix A, to measure the moisture content of the vent stream.

(iii) The net heating value of the vent stream shall be calculated using the following equation:

$$\mathbf{H_T = K_l \left[\sum_{j=1}^{n} C_j H_j \right] (1 - B_{ws})}$$

where:

H_T = Net heating value of the sample, megaJoule per standard cubic meter, where the net enthalpy per mole of vent stream is based on combustion at 25 °C and 760 millimeters of mercury, but the standard temperature for determining the volume corresponding to one mole is 20 °C, as in the definition of Q_s (vent stream flow rate).

K_l = Constant, 1.740×10^{-7} (parts per million)$^{-1}$ (gram-mole per standard cubic meter) (megaJoule per kilocalorie), where standard temperature for (gram-mole per standard cubic meter) is 20 °C.

B_{ws} = Water vapor content of the vent stream, proportion by volume; except that if the vent stream passes through a final steam jet and is not condensed, it shall be assumed that $B_{ws} = 0.023$ in order to correct to 2.3 percent moisture.

C_j = Concentration on a dry basis of compound j in parts per million,as measured for all organic compounds by Method 18 of 40 C.F.R. Part 60, Appendix A and measured for hydrogen and carbon monoxide by American Society for Testing and Materials D1946–77 as indicated in Section 17.2.1 (2) (ii) [40 C.F.R. § 63.115 (d) (2) (ii)].

H_j = Net heat of combustion of compound j, kilocalorie per gram-mole, based on combustion at 25 °C and 760 millimeters mercury. The heats of combustion of vent stream components shall be determined using American Society for Testing and Materials D2382–76 if published values are not available or cannot be calculated.

(iv) The emission rate of TOC (minus methane and ethane) (ETOC) and the emission rate of total organic HAP (EHAP) in the vent stream shall both be calculated using the following equation:

$$\mathbf{E = K2 \left[\sum_{j=1}^{n} Cj\ Mj \right] Qs}$$

where:

E = Emission rate of TOC (minus methane and ethane) or emission rate of total organic HAP in the sample, kilograms per hour.

K_2 = Constant, 2.494×10^{-6} (parts per million)$^{-1}$ (gram-mole per standard cubic meter) (kilogram/gram) (minutes/hour), where standard temperature for (gram-mole per standard cubic meter) is 20°C.

C_j = Concentration on a dry basis of organic compound j in parts per million as measured by Method 18 of 40 C.F.R. Part 60, Appendix A as indicated in Section 17.2.1 (2) (ii) [40 C.F.R. § 63.115 (d) (2) (ii)]. If the TOC emission rate is being calculated, Cj includes all organic compounds measured minus methane and ethane; if the total organic HAP emission rate is being calculated, only organic HAP compounds listed in Table 2 (Appendix F) in 40 C.F.R. Part 63 Subpart F are included.

M_j = Molecular weight of organic compound j, gram/gram-mole.

Q_s = Vent stream flow rate, dry standard cubic meter per minute, at a temperature of 20°C.

(v) In order to determine whether a vent stream is halogenated, the mass emission rate of halogen atoms contained in organic compounds shall be calculated.

(A) The vent stream concentration of each organic compound containing halogen atoms (parts per million by volume, by compound) shall be determined based on the following procedures:

(*1*) Process knowledge that no halogen or hydrogen halides are present in the process, or

(*2*) Applicable engineering assessment as discussed in Section 17.2.1 (1) (iii) [40 C.F.R. § 63.115 (d) (1) (iii)], or

(*3*) Concentration of organic compounds containing halogens measured by Method 18 of 40 C.F.R. Part 60, Appendix A, or

(*4*) Any other method or data that has been validated according to the applicable procedures in Method 301 of 40 C.F.R. Part 63 Appendix A.

(B) The following equation shall be used to calculate the mass emission rate of halogen atoms:

$$E = K2 * Q \left[\sum_{j=1} \sum_{i=1} Cj * Lji * Mji \right]$$

where:

E	=	mass of halogen atoms, dry basis, kilogram per hour.
K_2	=	Constant, 2.494×10^{-6} (parts per million)$^{-1}$ (kilogram-mole per standard cubic meter) (minute/hour), where standard temperature is 20°C.
C_j	=	Concentration of halogenated compound j in the gas stream, dry basis, parts per million by volume.
M_{ji}	=	Molecular weight of halogen atom i in compound j of the gas stream, kilogram per kilogram-mole.
L_{ji}	=	Number of atoms of halogen i in compound j of the gas stream.
Q	=	Flow rate of gas stream, dry standard cubic meters per minute, determined according to Sections 17.2.1 (1) or (2) (i) [40 C.F.R. §§ 63.115 (d) (1) or (d) (2) (i)].
j	=	Halogenated compound j in the gas stream.
i	=	Halogen atom i in compound j of the gas stream.
N	=	Number of halogenated compounds j in the gas stream.
m	=	Number of different halogens i in each compound j of the gas stream.

(3) The owner or operator shall calculate the TRE index value of the vent stream using the equations and procedures in 40 C.F.R. § 63.115.

(i) The equation for calculating the TRE index for a vent stream controlled by a flare or incinerator is as follows:

$$TRE = (1 / E_{HAP}) [a + b (Q_s) + c (H_T) + d (E_{TOC})]$$

where:

TRE	=	TRE index value.
EHAP	=	Hourly emission rate of total organic HAP, kilograms per hour, as calculated in Sections 17.2.1 (1) or (2) (iv) [40 C.F.R. §§ 63.115 (d) (1) or (d) (2) (iv)].
Q_s	=	Vent stream flow rate, standard cubic meters per minute, at a standard temperature of 20 °C, as calculated in Sections 17.2.1 (1) or (2) (i) [40 C.F.R. §§ 63.115 (d) (1) or (d) (2) (i)].
H_T	=	Vent stream net heating value, megaJoules per standard cubic meter, as calculated in Sections 17.2.1 (1) or (2) (iii) [40 C.F.R. §§ 63.115 (d) (1) or (d) (2) (iii)].
E_{TOC}	=	Emission rate of TOC (minus methane and ethane), kilograms per hour, as calculated in Sections 17.2.1 (1) or (2) (iv) [40 C.F.R. §§ 63.115 (d) (1) or (d) (2) (iv)].
a,b,c,d	=	Coefficients presented in Table 1 (Appendix G) of 40 C.F.R. Part 63 Subpart G, selected in accordance with Sections 17.2.1 (3) (ii) or (iii) [40 C.F.R. §§ 63.115 (d) (3) (ii) or (iii)].

(ii) The owner or operator of a nonhalogenated vent stream shall calculate the TRE index value based on the use of a flare, a thermal incinerator with 0 percent heat recovery, and a thermal incinerator with 70 percent heat recovery and shall select the lowest TRE index value. The owner or operator shall use the applicable coefficients in Table 1 (Appendix G) of 40 C.F.R. Part 63 Subpart G for nonhalogenated vent streams located within existing sources and the applicable coefficients in Table 2 of 40 C.F.R. Part 63 Subpart G for nonhalogenated vent streams located within new sources.

(iii) The owner or operator of a halogenated vent stream shall calculate the TRE index value based on the use of a thermal incinerator with 0 percent heat recovery, and a scrubber. The owner or operator shall use the applicable coefficients in Table 1 (Appendix G) of 40 C.F.R. Part 63 Subpart G for halogenated vent streams located within existing sources and the applicable coefficients in Table 2 of 40 C.F.R. Part 63 Subpart G for halogenated vent streams located within new sources.

[45CSR34, 40 C.F.R. § 63.115 (d), Group 005, 009, 00A ~~#32 Column Vent VT32, LR2-2, Tanks 7, 9, 83, 623, and 3N~~]

17.2.2. The owner or operator of a Group 2 process vent shall recalculate the TRE index value, flow, or organic hazardous air pollutants concentration for each process vent, as necessary to determine whether the vent is Group 1 or Group 2, whenever process changes are made that could reasonably be expected to change the vent to a Group 1 vent. Examples of process changes include, but are not limited to, changes in production capacity, production rate, feedstock type, or catalyst type, or whenever there is replacement, removal, or addition of recovery equipment. For purposes of 40 C.F.R. § 63.115 (e), process changes do not include: Process upsets; unintentional, temporary process changes; and changes that are within the range on which the original TRE calculation was based.

(1) The TRE index value, flow rate, or organic HAP concentration shall be recalculated based on measurements of vent stream flow rate, TOC, and organic HAP concentrations, and heating values as specified in 40 C.F.R. §§ 63.115 (a), (b), (c) and (d), as applicable, or on best engineering assessment of the effects of the change. Engineering assessments shall meet the specifications in Section 17.2.1 (1) [40 C.F.R. § 63.115 (d) (1)].

(2) Where the recalculated TRE index value is less than or equal to 1.0, or less than or equal to 4.0 but greater than 1.0, the recalculated flow rate is greater than or equal to 0.005 standard cubic meter per minute, or the recalculated concentration is greater than or equal to 50 parts per million by volume, the owner or operator shall submit a report as specified in Sections 17.5.1 or 17.5.2 [40 C.F.R. §§ 63.118 (g) or (h)], 40 C.F.R. §§ 63.118 (i), or (j) and shall comply with the appropriate provisions in 40 C.F.R. § 63.113 by the dates specified in 40 C.F.R. § 63.100.

[45CSR34, 40 C.F.R. § 63.115 (e), Group 005, 009, 00A ~~#32 Column Vent VT32, LR2-2, Tanks 7, 9, 83, 623, and 3N~~]

17.3. Testing Requirements

17.3.1. No additional Requirements.

17.4. Recordkeeping Requirements

17.4.1. The owner or operator of a Group 2 process vent with a TRE index greater than 4.0 as specified in Section 17.1.7 [40 C.F.R. § 63.113 (e)], shall maintain records and submit as part of the Notification of Compliance Status specified in 40 C.F.R. § 63.152, measurements, engineering assessments, and calculations performed to determine the TRE index value of the vent stream. Documentation of engineering assessments shall include all data, assumptions, and procedures used for the engineering assessments, as specified in Section 17.2.1 (1) [40 C.F.R. § 63.115 (d) (1)]. Koppers reports that their TRE index for the Solvent Column process vent is greater than 4.0.
[45CSR34, 40 C.F.R. § 63.117 (b), Group 005, 009, 00A ~~#32 Column Vent VT32, LR2-2, Tanks 7, 9, 83, 623, and 3N~~]

17.4.2. Each owner or operator subject to the provisions of 40 C.F.R. Part 63 Subpart G and who elects to demonstrate compliance with the TRE index value greater than 4.0 under Section 17.1.7 [40 C.F.R. § 63.113 (e)] or greater than 1.0 under 40 C.F.R. § 63.113 (a) (3) or 40 C.F.R. § 63.113 (d) shall keep up-to-date, readily accessible records of:

(1) Any process changes as defined in Section 17.2.2 [40 C.F.R. § 63.115 (e)]; and

(2) Any recalculation of the TRE index value pursuant to Section 17.2.2 [40 C.F.R. § 63.115 (e)].

[45CSR34, 40 C.F.R. § 63.118 (c), Group 005, 009, 00A ~~#32 Column Vent VT32, LR2-2, Tanks 7, 9, 83, 623, and 3N~~]

17.4.3. Each owner or operator of a Group 1 or Group 2 storage vessel shall keep readily accessible records showing the dimensions of the storage vessel and an analysis showing the capacity of the storage vessel. This record shall be kept as long as the storage vessel retains Group 1 or Group 2 status and is in operation. For each Group 2 storage vessel, the owner or operator is not required to comply with any other provisions of 40 C.F.R. §§ 63.119 through 63.123 other than those required by 40 C.F.R. § 63.123 unless such vessel is part of an emissions average as described in 40 C.F.R. § 63.150.
[45CSR34, 40 C.F.R. § 63.123 (a), Groups 00A and 005~~, 00B and 004, 7, 9, 83, 623, and 3N~~]

17.4.4. Each owner or operator of a Group 1 or Group 2 transfer rack shall record, update annually, and maintain the information specified in Sections 17.4.4 (1) through (3) [40 C.F.R. § 63.130 (f) (1) through (f) (3)] in a readily accessible location on site:

(1) An analysis demonstrating the design and actual annual throughput of the transfer rack;

(2) An analysis documenting the weight-percent organic HAP's in the liquid loaded. Examples of acceptable documentation include but are not limited to analyses of the material and engineering calculations.

(3) An analysis documenting the annual rack weighted average HAP partial pressure of the transfer rack.

(i) For Group 2 transfer racks that are limited to transfer of organic HAP's with partial pressures less than 10.3 kilopascals, documentation is required of the organic HAP's (by compound) that are transferred. The rack weighted average partial pressure does not need to be calculated.

(ii) For racks transferring one or more organic HAP's with partial pressures greater than 10.3 kilopascals, as well as one or more organic HAP's with partial pressures less than 10.3 kilopascals, a rack weighted partial pressure shall be documented. The rack weighted average HAP partial pressure shall be weighted by the annual throughput of each chemical transferred.

[45CSR34, 40 C.F.R. § 63.130 (f), Groups 005 and 009, 00A ~~00B, Loading Rack LR2-2~~]

17.5. Reporting Requirements

17.5.1. Whenever a process change, as defined in Section 17.2.2 [40 C.F.R. § 63.115 (e)], is made that causes a Group 2 process vent to become a Group 1 process vent, the owner or operator shall submit a report within 180 calendar days after the process change as specified in 40 C.F.R. § 63.151 (j). The report shall include:

(1) A description of the process change;

(2) The results of the recalculation of the flow rate, organic HAP concentration, and TRE index value required under Sections 17.2.2 [40 C.F.R. § 63.115 (e)] and recorded under Section 17.4.2 [40 C.F.R. § 63.118 (c)], 40 C.F.R. §§ 63.118 (d), or (e); and

(3) A statement that the owner or operator will comply with the provisions of 40 C.F.R. § 63.113 for Group 1 process vents by the dates specified in 40 C.F.R. Part 63 Subpart F.

[45CSR34, 40 C.F.R. § 63.118 (g), Group 005]

17.5.2. Whenever a process change, as defined in Sections 17.2.2 [40 C.F.R. § 63.115 (e)], is made that causes a Group 2 process vent with a TRE greater than 4.0 to become a Group 2 process vent with a TRE less than 4.0, the owner or operator shall submit a report within 180 calendar days after the process change. The report may be submitted as part of the next periodic report. The report shall include:

(1) A description of the process change,

(2) The results of the recalculation of the TRE index value required under Sections 17.2.2 [40 C.F.R. § 63.115 (e)] and recorded under Section 17.4.2 [40 C.F.R. § 63.118 (c)], and

(3) A statement that the owner or operator will comply with the requirements specified in 40 C.F.R. § 63.113 (d).

[45CSR34, 40 C.F.R. § 63.118 (h), Group 005]

17.5.3. The owner or operator of a source subject to 40 C.F.R. Part 63 Subpart G shall submit the reports listed in Section 17.5.3 [40 C.F.R. § 63.152 (a)].

(3) Periodic Reports described in 40 C.F.R. § 63.152 (c).

[45CSR34, 40 C.F.R. §§ 63.152 (a) (1), (3) and (4), Group 005]

18.0 Source-Specific Requirements [40 C.F.R. Part 63 Subpart H - National Emission Standards for Organic Hazardous for Equipment Leaks - Applicable to this Facility (Equipment in Benzene Service under 40 C.F.R. Part 61 Subpart J, Equipment in Naphthalene Service - Groups 005, 009, 00A]

18.1. Limitations and Standards

Applicablility

18.1.1. The provisions of 40 C.F.R. Part 63 Subpart H apply to pumps, compressors, agitators, pressure relief devices, sampling connection systems, open-ended valves or lines, valves, connectors, surge control vessels, bottoms receivers, instrumentation systems, and control devices or closed vent systems required by 40 C.F.R. Part 63 Subpart H that are intended to operate in organic hazardous air pollutant service 300 hours or more during the calendar year within a source subject to the provisions of a specific subpart in 40 C.F.R. Part 63 that references 40 C.F.R. Part 63 Subpart H. Section 18.1.1 does require compliance certification.
[45CSR34, 40 C.F.R. § 63.160 (a), 45CSR13, R13-2274, 4.1.23., ~~Group 007 and Equipment in Benzene Service under Subpart J~~]

Definitions

18.1.2. Equipment associated with the Naphthalene Distillation Unit (Group 005) is defined as either in heavy liquid or gas/vapor service. Equipment associated with the Debenzolizer Unit (Group 003) is subject to 40 C.F.R. Part 61 Subpart J because the equipment may be *in benzene service*, as defined by 40 C.F.R. Part 61Subpart J. Benzene is defined as either in light liquid or gas/vapor service. Definitions for equipment in:

a. *In Gas/Vapor service* means that a piece of equipment in organic hazardous air pollutant service contains a gas or vapor at operating conditions.

b. *In Liquid service* means that a piece of equipment in organic hazardous air pollutant service is not in gas/vapor service

c. *In Light liquid service* means that a piece of equipment in organic hazardous air pollutant service contains a liquid that meets the following conditions:

(1) The vapor pressure of one or more of the organic compounds is greater than 0.3 kilopascals at 20 °C,

(2) he total concentration of the pure organic compounds constituents having a vapor pressure greater than 0.3 kilopascals at 20 °C is equal to or greater than 20 percent by weight of the total process stream, and

(3) The fluid is a liquid at operating conditions.

Note: Vapor pressures may be determined by the methods described in 40 CFR 60.485 (e) (1).

d. *In Heavy liquid service* means that a piece of equipment in organic hazardous air pollutant service is not in gas/vapor service or in light liquid service.

Section 18.1.2 does require compliance certification.

[45CSR34, 40 C.F.R. § 63.161, ~~Group 007 and Equipment in Benzene Service under Subpart J~~]

Definitions

18.1.2. Equipment associated with the Naphthalene Distillation Unit (Group 005) is defined as either in heavy liquid or gas/vapor service. Equipment associated with the Debenzolizer Unit (Group 003) is subject to 40 C.F.R. Part 61 Subpart J because the equipment may be *in benzene service*, as defined by 40 C.F.R. Part 61Subpart J. Benzene is defined as either in light liquid or gas/vapor service. Definitions for equipment in:

a. *In Gas/Vapor service* means that a piece of equipment in organic hazardous air pollutant service contains a gas or vapor at operating conditions.

b. *In Liquid service* means that a piece of equipment in organic hazardous air pollutant service is not in gas/vapor service

c. *In Light liquid service* means that a piece of equipment in organic hazardous air pollutant service contains a liquid that meets the following conditions:

(1) The vapor pressure of one or more of the organic compounds is greater than 0.3 kilopascals at 20 °C,

(2) he total concentration of the pure organic compounds constituents having a vapor pressure greater than 0.3 kilopascals at 20 °C is equal to or greater than 20 percent by weight of the total process stream, and

(3) The fluid is a liquid at operating conditions.

Note: Vapor pressures may be determined by the methods described in 40 CFR 60.485 (e) (1).

d. *In Heavy liquid service* means that a piece of equipment in organic hazardous air pollutant service is not in gas/vapor service or in light liquid service.

Section 18.1.2 does require compliance certification.

[45CSR34, 40 C.F.R. § 63.161~~, Group 007 and Equipment in Benzene Service under Subpart J~~]

Standards

18.1.3. Compliance with 40 C.F.R. Part 63 Subpart H will be determined by review of the records required by 40 C.F.R. § 63.181 and the reports required 40 C.F.R. § 63.182, review of performance test results, and by inspections.
[45CSR34, 40 C.F.R. § 63.162 (a)~~, Group 007 and Equipment in Benzene Service under Subpart J~~]

18.1.4. Each piece of equipment in a process unit to which 40 C.F.R. Part 63 Subpart H applies shall be identified such that it can be distinguished readily from equipment that is not subject to 40 C.F.R. Part 63 Subpart H. Identification of the equipment does not require physical tagging of the equipment. For example, the equipment may be identified on a plant site plan, in log entries, or by designation of process unit boundaries by some form of weatherproof identification.
[45CSR34, 40 C.F.R. § 63.162 (c)~~, Group 007 and Equipment in Benzene Service under Subpart J~~]

18.1.5. Equipment that is in vacuum service is excluded from the requirements of 40 C.F.R. Part 63 Subpart H. . Section 18.1.5 does require compliance certification.
[45CSR34, 40 C.F.R. § 63.162 (d)~~, Group 007 and Equipment in Benzene Service under Subpart J~~]

18.1.6. Equipment that is in organic HAP service less than 300 hours per calendar year is excluded from the requirements of 40 C.F.R. §§ 63.163 through 63.174 and 40 C.F.R. § 63.178 if it is identified as required in 40 C.F.R. § 63.181 (j). Section 18.1.6 does require compliance certification.
[45CSR34, 40 C.F.R. § 63.162 (e)~~, Group 007 and Equipment in Benzene Service under Subpart J~~]

18.1.7. When each leak is detected as specified in 40 C.F.R. §§ 63.163 and 40 C.F.R. § 63.164; 40 C.F.R. §§ 63.168 and 63.169; 40 C.F.R. §§ 63.172 through 63.174, the following requirements apply:

(1) Clearly identify the leaking equipment.

(2) The identification on a valve may be removed after it has been monitored as specified in Section 18.1.29 (3) [40 C.F.R. § 63.168 (f) (3)], and 40 C.F.R. § 63.175 (e) (7) (i) (D), and no leak has been detected during the follow-up monitoring. If the owner or operator elects to comply using the provisions of Section 18.1.51 (1) (i) [40 C.F.R. § 63.174 (c) (1) (i)], the identification on a connector may be removed after it is monitored as specified in Section 18.1.51 (1) (i) [40 C.F.R. § 63.174 (c) (1) (i)] and no leak is detected during that monitoring.

(3) The identification which has been placed on equipment determined to have a leak, except for a valve or for a connector that is subject to the provisions of Section 18.1.51 (1) (i) [40 C.F.R. § 63.174 (c) (1) (i)], may be removed after it is repaired.

[45CSR34, 40 C.F.R. § 63.162 (f)~~, Group 007 and Equipment in Benzene Service under Subpart J~~]

18.1.8. Except as provided in 40 C.F.R. §§ 63.162 (g) (1), all terms in 40 C.F.R. Part 63 Subpart H that define a period of time for completion of required tasks (e.g., weekly, monthly, quarterly, annual), refer to the standard calendar periods unless specified otherwise in the section or subsection that imposes the requirement.
[45CSR34, 40 C.F.R. § 63.162 (g)~~, Group 007 and Equipment in Benzene Service under Subpart J~~]

18.1.9. In all cases where the provisions of 40 C.F.R. Part 63 Subpart H require an owner or operator to repair leaks by a specified time after the leak is detected, it is a violation of 40 C.F.R. Part 63 Subpart H to fail to take action to repair the leaks within the specified time. If action is taken to repair the leaks within the specified time, failure of that action to successfully repair the leak is not a violation of 40 C.F.R. Part 63 Subpart H. However, if the repairs are unsuccessful, a leak is detected and the owner or operator shall take further action as required by applicable provisions of 40 C.F.R. Part 63 Subpart H.
[45CSR34, 40 C.F.R. § 63.162 (h)~~, Group 007 and Equipment in Benzene Service under Subpart J~~]

1. <u>Standards for Pumps in Light Liquid Service</u>

18.1.10. The provisions of 40 C.F.R. § 63.163 apply to each pump that is in light liquid service. All pumps in light liquid service are meeting Phase III.
[45CSR34, 40 C.F.R. § 63.163 (a)~~, Group 007 and Equipment in Benzene Service under Subpart J~~]

18.1.11. (1) The owner or operator of a process unit subject to 40 C.F.R. Part 63 Subpart H shall monitor each pump monthly to detect leaks by the method specified in Section 18.2.1 [40 C.F.R. § 63.180 (b)] and shall comply with the requirements of Sections 18.1.8 through 18.1.11 [40 C.F.R. §§ 63.163 (a) through (d)], except as provided in 40 C.F.R. §§ 63.162 (b) and 63.163 (e) through (i) and Section 18.1.14 [40 C.F.R. § 63.163 (j)].

(2) The instrument reading, as determined by the method as specified in Section 18.2.1 [40 C.F.R. § 63.180 (b)], that defines a leak for Phase III standard is:

(i) For Phase III, an instrument reading of:

(A) 5,000 parts per million or greater for pumps handling polymerizing monomers;

(B) 2,000 parts per million or greater for pumps in food/medical service; and

(C) 1,000 parts per million or greater for all other pumps.

(3) Each pump shall be checked by visual inspection each calendar week for indications of liquids dripping from the pump seal. If there are indications of liquids dripping from the pump seal, a leak is detected.

[45CSR34, 40 C.F.R. § 63.163 (b), ~~Group 007 and Equipment in Benzene Service under Subpart J~~]

18.1.12. (1) When a leak is detected, it shall be repaired as soon as practicable, but not later than 15 calendar days after it is detected, except as provided in Section 18.1.12 (3) [40 C.F.R. § 63.163 (c) (3)] or Sections 40 C.F.R. § 63.171.

(2) A first attempt at repair shall be made no later than 5 calendar days after the leak is detected. First attempts at repair include, but are not limited to, the following practices where practicable:

(i) Tightening of packing gland nuts.

(ii) Ensuring that the seal flush is operating at design pressure and temperature.

(3) For pumps in Phase III to which a 1,000 parts per million leak definition applies, repair is not required unless an instrument reading of 2,000 parts per million or greater is detected.

[45CSR34, 40 C.F.R. § 63.163 (c)~~, Group 007 and Equipment in Benzene Service under Subpart J~~]

18.1.13. (1) The owner or operator shall decide no later than the first monitoring period whether to calculate percent leaking pumps on a process unit basis or on a source-wide basis. Once the owner or operator has decided, all subsequent percent calculations shall be made on the same basis.

(2) If, in Phase III, calculated on a 6-month rolling average, the greater of either 10 percent of the pumps in a process unit or three pumps in a process unit leak, the owner or operator shall implement a quality improvement program for pumps that complies with the requirements of 40 C.F.R. § 63.176.

(3) The number of pumps at a process unit shall be the sum of all the pumps in organic HAP service, except that pumps found leaking in a continuous process unit within 1 month after start-up of the pump shall not count in the percent leaking pumps calculation for that one monitoring period only.

(4) Percent leaking pumps shall be determined by the following equation:

$$\%PL=((PL-PS)/(PT-PS))\times 100$$

where:

%PL	=	Percent leaking pumps
PL	=	Number of pumps found leaking as determined through monthly monitoring as required in Sections 18.1.11 (1) and (2) [40 C.F.R. §§ 63.163 (b) (1) and (b) (2)].
PT	=	Total pumps in organic HAP service, including those meeting the criteria in 40 C.F.R. §§ 63.163 (e) and (f).

PS = Number of pumps leaking within 1 month of start-up during the current monitoring period.

[45CSR34, 40 C.F.R. § 63.163 (d)~~, Group 007 and Equipment in Benzene Service under Subpart J~~]

18.1.14. Any pump that is designated, as described in Section 18.4.2 (7) (i) [40 C.F.R. § 63.181 (b) (7) (i)], as an unsafe-to-monitor pump is exempt from the requirements of Sections 18.1.9 and 18.1.11 [40 C.F.R. §§ 63.163 (b) and (d)] and 40 C.F.R. § 63.163 (e) if:

(1) The owner or operator of the pump determines that the pump is unsafe to monitor because monitoring personnel would be exposed to an immediate danger as a consequence of complying with Sections 18.1.9 and 18.1.11 [40 C.F.R. §§ 63.163 (b) and (d)] and 40 C.F.R. § 63.163 (e); and

(2) The owner or operator of the pump has a written plan that requires monitoring of the pump as frequently as practical during safe-to-monitor times, but not more frequently than the periodic monitoring schedule otherwise applicable.

[45CSR34, 40 C.F.R. § 63.163 (j)~~, Group 007 and Equipment in Benzene Service under Subpart J~~]

2. <u>Standards for Compressors in Gas /Vapor Service</u>

Note: There are no compressors at the facility subject to 40 C.F.R. Part 63 Subpart H (40 C.F.R. § 63.164).

3. <u>Standards for Pressure Relief Devices (PRD's) in Gas /Vapor Service</u>

18.1.15. Except during pressure releases, each pressure relief device in gas/vapor service shall be operated with an instrument reading of less than 500 parts per million above background except as provided in Section 18.1.16 [40 C.F.R. § 63.165 (b)], as measured by the method specified in Section 18.2.2 [40 C.F.R. § 63.180 (c)].
[45CSR34, 40 C.F.R. § 63.165 (a)~~, Group 007 and Equipment in Benzene Service under Subpart J~~]

18.1.16. (1) After each pressure release, the pressure relief device shall be returned to a condition indicated by an instrument reading of less than 500 parts per million above background, as soon as practicable, but no later than 5 calendar days after each pressure release, except as provided in 40 C.F.R. § 63.171.

(2) No later than 5 calendar days after the pressure release and being returned to organic HAP service, the pressure relief device shall be monitored to confirm the condition indicated by an instrument reading of less than 500 parts per million above background, as measured by the method specified in Section 18.2.2 [40 C.F.R. § 63.180 (c)].

[45CSR34, 40 C.F.R. § 63.165 (b)~~, Group 007 and Equipment in Benzene Service under Subpart J~~]

18.1.17. Any pressure relief device that is routed to a process or fuel gas system or equipped with a closed-vent system capable of capturing and transporting leakage from the pressure relief device to a control device as described in 40 C.F.R. § 63.172 is exempt from the requirements of Sections 18.1.15 and 18.1.16 [40 C.F.R. § 63.165 (a) and (b)]. Section 18.1.17 does require compliance certification.
[45CSR34, 40 C.F.R. § 63.165 (c)~~, Group 007 and Equipment in Benzene Service under Subpart J~~]

18.1.18. (1) Any pressure relief device that is equipped with a rupture disk upstream of the pressure relief device (PRD) is exempt from the requirements of Sections 18.1.15 and 18.1.16 [40 C.F.R. § 63.165 (a) and (b)], provided the owner or operator complies with the requirements in Section 18.1.18 (2) [40 C.F.R. § 63.165 (d) (2)].

(2) After each pressure release, a rupture disk shall be installed upstream of the pressure relief device as soon as practicable, but no later than 5 calendar days after each pressure release, except as provided in 40 C.F.R. § 63.171.

[45CSR34, 40 C.F.R. § 63.165 (d)~~, Group 007 and Equipment in Benzene Service under Subpart J~~]

4. Standards for Sampling Connection Systems

18.1.19. Each sampling connection system shall be equipped with a closed-purge, closed-loop, or closed-vent system, except as provided in 40 C.F.R. § 63.162 (b). Gases displaced during filling of the sample container are not required to be collected or captured.
[45CSR34, 40 C.F.R. § 63.166 (a)~~, Group 007 and Equipment in Benzene Service under Subpart J~~]

18.1.20. Each closed-purge, closed-loop, or closed-vent system as required in Section 18.1.19 [40 C.F.R. § 63.166 (a)] shall:

(1) Return the purged process fluid directly to the process line; or

(2) Collect and recycle the purged process fluid to a process; or

(3) Be designed and operated to capture and transport the purged process fluid to a control device that complies with the requirements of 40 C.F.R. § 63.172; or

(4) Collect, store, and transport the purged process fluid to a system or facility identified in 40 C.F.R. §§ 63.166 (b) (4) (i), (ii), or (iii).

[45CSR34, 40 C.F.R. § 63.166 (b)~~, Group 007 and Equipment in Benzene Service under Subpart J~~]

18.1.21. *In-situ* sampling systems and sampling systems without purges are exempt from the requirements of Section 18.1.19 and 18.1.20 [40 C.F.R. § 63.166 (a) and (b)]. Section 18.1.21 does require compliance certification.
[45CSR34, 40 C.F.R. § 63.166 (c)~~, Group 007 and Equipment in Benzene Service under Subpart J~~]

5. Standards for Open-ended Valves and Line

18.1.22. (1) Each open-ended valve or line shall be equipped with a cap, blind flange, plug, or a second valve, except as provided in 40 C.F.R. § 63.162 (b) and Sections 18.1.25 and 18.1.26 [40 C.F.R. §§ 63.167 (d) and (e)].

(2) The cap, blind flange, plug, or second valve shall seal the open end at all times except during operations requiring process fluid flow through the open-ended valve or line, or during maintenance or repair.

[45CSR34, 40 C.F.R. § 63.167 (a)~~, Group 007 and Equipment in Benzene Service under Subpart J~~]

18.1.23. Each open-ended valve or line equipped with a second valve shall be operated in a manner such that the valve on the process fluid end is closed before the second valve is closed.
[45CSR34, 40 C.F.R. § 63.167 (b)~~, Group 007 and Equipment in Benzene Service under Subpart J~~]

18.1.24. When a double block and bleed system is being used, the bleed valve or line may remain open during operations that require venting the line between the block valves but shall comply with Sections 18.1.22 [40 C.F.R. § 63.167 (a)] at all other times.
[45CSR34, 40 C.F.R. § 63.167 (c)~~, Group 007 and Equipment in Benzene Service under Subpart J~~]

18.1.25. Open-ended valves or lines in an emergency shutdown system which are designed to open automatically in the event of a process upset are exempt from the requirements of Sections 18.1.22 through 18.1.24 [40 C.F.R. §§ 63.167 (a) through (c)].
[45CSR34, 40 C.F.R. § 63.167 (d)~~, Group 007 and Equipment in Benzene Service under Subpart J~~]

18.1.26. Open-ended valves or lines containing materials which would autocatalytically polymerize or, would present an explosion, serious overpressure, or other safety hazard if capped or equipped with a double block and bleed system as specified in Sections 18.1.22 through 18.1.24 [40 C.F.R. §§ 63.167 (a) through (c)] are exempt from the requirements of Sections 18.1.22 through 18.1.24 [40 C.F.R. §§ 63.167 (a) through (c)].
[45CSR34, 40 C.F.R. § 63.167 (e)~~, Group 007 and Equipment in Benzene Service under Subpart J~~]

6. <u>Standards for Valves in Light/Vapor and in Light Liquid Service</u>

18.1.27. The provisions of 40 C.F.R. § 63.168 apply to valves that are either in gas service or in light liquid service. At Koppers, all valves subject to Subpart H in gas/vapor and light liquid service are meeting Phase III.
[45CSR34, 40 C.F.R. § 63.168 (a)~~, Group 007 and Equipment in Benzene Service under Subpart J~~]

18.1.28. The owner or operator of a source subject to 40 C.F.R. Part 63 Subpart H shall monitor all valves, except as provided in 40 C.F.R. § 63.162 (b) and Sections 18.1.33 and 18.1.34 [40 C.F.R. §§ 63.168 (h) and (i)], at the intervals specified in Section 18.1.29 [40 C.F.R. § 63.168 (d)] and shall comply with all other provisions of 40 C.F.R. § 63.168, except as provided in 40 C.F.R. § 63.171, 40 C.F.R. § 63.177, 40 C.F.R. § 63.178, and 40 C.F.R. § 63.179.

(1) The valves shall be monitored to detect leaks by the method specified in Section 18.2.1 [40 C.F.R. § 63.180 (b)].

(2) The instrument reading that defines a leak for Phase III standard is:

(i) For Phase III, an instrument reading of 500 parts per million or greater.

[45CSR34, 40 C.F.R. § 63.168 (b)~~, Group 007 and Equipment in Benzene Service under Subpart J~~]

18.1.29. In Phase III, the owner or operator shall monitor valves for leaks at the intervals specified below:

(1) At process units with 2 percent or greater leaking valves, calculated according to Section 18.1.30 [40 C.F.R. § 63.168 (e)], the owner or operator shall either:

(i) Monitor each valve once per month; or

(ii) Within the first year after the onset of Phase III, implement a quality improvement program for valves that complies with the requirements of 40 C.F.R. § 63.175 (d) or (e) and monitor quarterly.

(2) At process units with less than 2 percent leaking valves, the owner or operator shall monitor each valve once each quarter, except as provided in Sections 18.1.29 (3) and (4) [40 C.F.R. § 63.168 (d) (3) and (d) (4)].

(3) At process units with less than 1 percent leaking valves, the owner or operator may elect to monitor each valve once every 2 quarters.

(4) At process units with less than 0.5 percent leaking valves, the owner or operator may elect to monitor each valve once every 4 quarters.

[45CSR34, 40 C.F.R. § 63.168 (d)~~, Group 007 and Equipment in Benzene Service under Subpart J~~]

18.1.30. (1) Percent leaking valves at a process unit shall be determined by the following equation:

$$\%VL=(VL/(VT+VC))\times 100$$

where:

%VL	=	Percent leaking valves as determined through periodic monitoring required in Sections 18.1.28 and 18.1.29 [40 C.F.R. § 63.168 (b) and (d)].
VL	=	Number of valves found leaking excluding nonrepairables as provided in Section 18.1.30 (3) (i) [40 C.F.R. § 63.168 (e) (3) (i)].
VT	=	Total valves monitored, in a monitoring period excluding valves monitored as required by Section 18.1.31 (3) [40 C.F.R. § 63.168 (f) (3)].
VC	=	Optional credit for removed valves = 0.67 × net number (i.e., total removed−total added) of valves in organic HAP service removed from process unit after the date set forth in 40 C.F.R. § 63.100 (k) for existing process units, and after the date of initial start-up for new sources. If credits are not taken, then VC=0.

(2) For use in determining monitoring frequency, as specified in Section 18.1.29 [40 C.F.R. § 63.168 (d)], the percent leaking valves shall be calculated as a rolling average of two consecutive monitoring periods for monthly, quarterly, or semiannual monitoring programs; and as an average of any three out of four consecutive monitoring periods for annual monitoring programs.

(3) (i) Nonrepairable valves shall be included in the calculation of percent leaking valves the first time the valve is identified as leaking and nonrepairable and as required to comply with Section 18.1.30 (3) (ii) [40 C.F.R. § 63.168 (e) (3) (ii)]. Otherwise, a number of nonrepairable valves (identified and included in the percent leaking calculation in a previous period) up to a maximum of 1 percent of the total number of valves in organic HAP service at a process unit may be excluded from calculation of percent leaking valves for subsequent monitoring periods.

(ii) If the number of nonrepairable valves exceeds 1 percent of the total number of valves in organic HAP service at a process unit, the number of nonrepairable valves exceeding 1 percent of the total number of valves in organic HAP service shall be included in the calculation of percent leaking valves.

[45CSR34, 40 C.F.R. § 63.168 (e)~~, Group 007 and Equipment in Benzene Service under Subpart J~~]

18.1.31. (1) When a leak is detected, it shall be repaired as soon as practicable, but no later than 15 calendar days after the leak is detected, except as provided in 40 C.F.R. § 63.171.

(2) A first attempt at repair shall be made no later than 5 calendar days after each leak is detected.

(3) When a leak has been repaired, the valve shall be monitored at least once within the first 3 months after its repair.

(i) The monitoring shall be conducted as specified in Sections 18.2.1 and 18.2.2 [40 C.F.R. §§ 63.180 (b) and (c)], as appropriate, to determine whether the valve has resumed leaking.

(ii) Periodic monitoring required by Sections 18.1.28 and 18.1.29 [40 C.F.R. § 63.168 (b) and (d)] may be used to satisfy the requirements of Section 18.1.31 (3) [40 C.F.R. § 63.168 (f) (3)], if the timing of the monitoring period coincides with the time specified in Section 18.1.31 (3) [40 C.F.R. § 63.168 (f) (3)]. Alternatively, other monitoring may be performed to satisfy the requirements of Section 18.1.31 (3) [40 C.F.R. § 63.168 (f) (3)], regardless of whether the timing of the monitoring period for periodic monitoring coincides with the time specified in Section 18.1.31 (3) [40 C.F.R. § 63.168 (f) (3)].

(iii) If a leak is detected by monitoring that is conducted pursuant to Section 18.1.31 (3) [40 C.F.R. § 63.168 (f) (3)], the owner or operator shall follow the provisions of Section 18.1.31 (3) (iii) (A) and (3) (iii) (B) [40 C.F.R. § 63.168 (f) (3) (iii) (A) and (f) (3) (iii) (B)], to determine whether that valve must be counted as a leaking valve for purposes of Section 21.1.30 [40 C.F.R. § 63.168 (e)].

(A) If the owner or operator elected to use periodic monitoring required by Sections 18.1.28 and 18.1.29 [40 C.F.R. § 63.168 (b) through (d)] to satisfy the requirements of Section 18.1.31 (3) [40 C.F.R. § 63.168 (f) (3)], then the valve shall be counted as a leaking valve.

(B) If the owner or operator elected to use other monitoring, prior to the periodic monitoring required by Sections 18.1.28 and 21.1.29 [40 C.F.R. § 63.168 (b) and (d)], to satisfy the requirements of Section 18.1.31 (3) [40 C.F.R. § 63.168 (f) (3)], then the valve shall be counted as a leaking valve unless it is repaired and shown by periodic monitoring not to be leaking.

[45CSR34, 40 C.F.R. § 63.168 (f)~~, Group 007 and Equipment in Benzene Service under Subpart J~~]

18.1.32. First attempts at repair include, but are not limited to, the following practices where practicable:

(1) Tightening of bonnet bolts,

(2) Replacement of bonnet bolts,

(3) Tightening of packing gland nuts, and

(4) Injection of lubricant into lubricated packing.

[45CSR34, 40 C.F.R. § 63.168 (g)~~, Group 007 and Equipment in Benzene Service under Subpart J~~]

18.1.33. Any valve that is designated, as described in Section 18.4.2 (7) (ii) [40 C.F.R. § 63.181 (b) (7) (ii)], as an unsafe-to-monitor valve is exempt from the requirements of 40 C.F.R. § 63.168 (b) through (f) if:

(1) The owner or operator of the valve determines that the valve is unsafe to monitor because monitoring personnel would be exposed to an immediate danger as a consequence of complying with Sections 18.1.28 and 18.1.29 [40 C.F.R. § 63.168 (b) and (d)] and 40 C.F.R. § 63.168 (c); and

(2) The owner or operator of the valve has a written plan that requires monitoring of the valve as frequently as practicable during safe-to-monitor times, but not more frequently than the periodic monitoring schedule otherwise applicable.

Section 18.1.33 does require compliance certification.

[45CSR34, 40 C.F.R. § 63.168 (h)~~, Group 007 and Equipment in Benzene Service under Subpart J~~]

18.1.34. Any valve that is designated, as described in Section 18.4.2 (7) (ii) [40 C.F.R. § 63.181 (b) (7) (ii)], as a difficult-to-monitor valve is exempt from the requirements of Sections 18.1.28 and 18.1.29 [40 C.F.R. § 63.168 (b) and (d)] if:

(1) The owner or operator of the valve determines that the valve cannot be monitored without elevating the monitoring personnel more than 2 meters above a support surface or it is not accessible at anytime in a safe manner;

(2) The process unit within which the valve is located is an existing source or the owner or operator designates less than 3 percent of the total number of valves in a new source as difficult-to-monitor; and

(2) The owner or operator of the valve follows a written plan that requires monitoring of the valve at least once per calendar year.

Section 18.1.34 does require compliance certification.

[45CSR34, 40 C.F.R. § 63.168 (i)~~, Group 007 and Equipment in Benzene Service under Subpart J~~]

18.1.35. Any equipment located at a plant site with fewer than 250 valves in organic HAP service is exempt from the requirements for monthly monitoring and a quality improvement program specified in Section 18.1.29 (1) [40 C.F.R. § 63.168 (d) (1)]. Instead, the owner or operator shall monitor each valve in organic HAP service for leaks once each quarter, or comply with Sections 18.1.29 (3) or (4) [40 C.F.R. § 63.168 (d) (3) or (d) (4)] except as provided in Sections 18.1.33 and 18.1.34 [40 C.F.R. § 63.168 (h) and (i)].
[45CSR34, 40 C.F.R. § 63.168 (j), All Groups]

7. <u>Standards for Pumps, Valves, Connectors and Agitators in Heavy Liquid Service and Instrumentation Systems and Pressure Relief Devices in Liquid Service</u>

18.1.36. Pumps, valves, connectors, and agitators in heavy liquid service, pressure relief devices in light liquid or heavy liquid service, and instrumentation systems shall be monitored within 5 calendar days by the method specified in Section 18.2.1 [40 C.F.R. § 63.180 (b)] if evidence of a potential leak to the atmosphere is found by visual, audible, olfactory, or any other detection method. If such a potential leak is repaired as required in Sections 18.1.38 and 18.1.39 [40 C.F.R. § 63.169 (c) and (d)], it is not necessary to monitor the system for leaks by the method specified in Section 18.2.1 [40 C.F.R. § 63.180 (b)].
[45CSR34, 40 C.F.R. § 63.169 (a)~~, Group 007 and Equipment in Benzene Service under Subpart J~~]

18.1.37. If an instrument reading of 10,000 parts per million or greater for agitators, 5,000 parts per million or greater for pumps handling polymerizing monomers, 2,000 parts per million or greater for all other pumps (including pumps in food/medical service), or 500 parts per million or greater for valves, connectors, instrumentation systems, and pressure relief devices is measured, a leak is detected.
[45CSR34, 40 C.F.R. § 63.169 (b)~~, Group 007 and Equipment in Benzene Service under Subpart J~~]

18.1.38. (1) When a leak is detected, it shall be repaired as soon as practicable, but not later than 15 calendar days after it is detected, except as provided in 40 C.F.R. § 63.171.

(2) The first attempt at repair shall be made no later than 5 calendar days after each leak is detected.

(3) For equipment identified in Section 18.1.36 [40 C.F.R. § 63.169 (a)] that is not monitored by the method specified in Section 18.2.1 [40 C.F.R. § 63.180 (b)], repaired shall mean that the visual, audible, olfactory, or other indications of a leak to the atmosphere have been eliminated; that no bubbles are observed at potential leak sites during a leak check using soap solution; or that the system will hold a test pressure.

[45CSR34, 40 C.F.R. § 63.169 (c)~~, Group 007 and Equipment in Benzene Service under Subpart J~~]

18.1.39. First attempts at repair include, but are not limited to, the practices described under Sections 18.1.12 (2) and 18.1.32 [40 C.F.R. §§ 63.163 (c) (2) and 63.168 (g)], for pumps and valves, respectively.
[45CSR34, 40 C.F.R. § 63.169 (d)~~, Group 007 and Equipment in Benzene Service under Subpart J~~]

8. <u>Delay of Repair</u>

18.1.40. Delay of repair of equipment for which leaks have been detected is allowed if repair within 15 days is technically infeasible without a process unit shutdown. Repair of this equipment shall occur by the end of the next process unit shutdown.
[45CSR34, 40 C.F.R. § 63.171 (a)~~, Group 007 and Equipment in Benzene Service under Subpart J~~]

18.1.41. Delay of repair of equipment for which leaks have been detected is allowed for equipment that is isolated from the process and that does not remain in organic HAP service. Section 18.1.41 does require compliance certification.
[45CSR34, 40 C.F.R. § 63.171 (b)~~, Group 007 and Equipment in Benzene Service under Subpart J~~]

18.1.42. Delay of repair for valves, connectors, and agitators is also allowed if:

(1) The owner or operator determines that emissions of purged material resulting from immediate repair would be greater than the fugitive emissions likely to result from delay of repair, and

(2) When repair procedures are effected, the purged material is collected and destroyed or recovered in a control device complying with 40 C.F.R. § 63.172.

[45CSR34, 40 C.F.R. § 63.171 (c)~~, Group 007 and Equipment in Benzene Service under Subpart J~~]

18.1.43. Delay of repair for pumps is also allowed if:

(1) Repair requires replacing the existing seal design with a new system that the owner or operator has determined under the provisions of 40 C.F.R. § 63.176 (d) will provide better performance or:

(i) A dual mechanical seal system that meets the requirements of 40 C.F.R. § 63.163 (e),

(ii) A that meets the requirements of 40 C.F.R. § 63.163 (f), or

(iii) A closed-vent system and control device that meets the requirements of 40 C.F.R. § 63.163 (g); and

(2) Repair is completed as soon as practicable, but not later than 6 months after the leak was detected.

[45CSR34, 40 C.F.R. § 63.171 (d)~~, Group 007 and Equipment in Benzene Service under Subpart J~~]

18.1.44. Delay of repair beyond a process unit shutdown will be allowed for a valve if valve assembly replacement is necessary during the process unit shutdown, valve assembly supplies have been depleted, and valve assembly supplies had been sufficiently stocked before the supplies were depleted. Delay of repair beyond the second process unit shutdown will not be allowed unless the third process unit shutdown occurs sooner than 6 months after the first process unit shutdown.
[45CSR34, 40 C.F.R. § 63.171 (e)~~, Group 007 and Equipment in Benzene Service under Subpart J~~]

9. Standards for Closed-Vent System and Control Devices

Note: 1. Koppers is not subject 40 C.F.R. § 63.172 for equipment associated with the NDU because all emission sources are designated as Group 2 not requiring a closed vent system to a control device.

2. Koppers is also not subject to 40 C.F.R. § 63.172 for equipment in benzene service. Even though there is a closed vent system to a control device from the Debenzolizer and Tank 11, the control device is not controlling emissions from the "equipment" as defined in 40 C.F.R. Part 63 Subpart H and 40 C.F.R. Part 61 Subpart V (i.e., pumps, valves, connectors, etc).

10. Standards for Agitators in Gas/Vapor and in Light Liquid Service

18.1.45. (1) Each agitator shall be monitored monthly to detect leaks by the methods specified in Section 18.2.1 [40 C.F.R. § 63.180 (b)], except as provided in 40 C.F.R. § 63.162 (b).

(2) If an instrument reading of 10,000 parts per million or greater is measured, a leak is detected.

[45CSR34, 40 C.F.R. § 63.173 (a)~~, Group 007 and Equipment in Benzene Service under Subpart J~~]

18.1.46. (1) Each agitator shall be checked by visual inspection each calendar week for indications of liquids dripping from the agitator.

(2) If there are indications of liquids dripping from the agitator, a leak is detected.

[45CSR34, 40 C.F.R. § 63.173 (b)~~, Group 007 and Equipment in Benzene Service under Subpart J~~]

18.1.47. (1) When a leak is detected, it shall be repaired as soon as practicable, but not later than 15 calendar days after it is detected, except as provided in 40 C.F.R. § 63.171.

(2) A first attempt at repair shall be made no later than 5 calendar days after each leak is detected.

[45CSR34, 40 C.F.R. § 63.173 (c)~~, Group 007 and Equipment in Benzene Service under Subpart J~~]

18.1.48. Any agitator that is difficult-to-monitor is exempt from the requirements of Sections 18.1.45 through 18.1.47 [40 C.F.R. §§ 63.173 (a) through (c)] and 40 C.F.R. § 63.173 (d) if:

(1) The owner or operator determines that the agitator cannot be monitored without elevating the monitoring personnel more than two meters above a support surface or it is not accessible at anytime in a safe manner;

(2) The process unit within which the agitator is located is an existing source or the owner or operator designates less than three percent of the total number of agitators in a new source as difficult-to-monitor; and

(3) The owner or operator follows a written plan that requires monitoring of the agitator at least once per calendar year.

Section 18.1.48 does require compliance certification.

[45CSR34, 40 C.F.R. § 63.173 (h)~~, Group 007 and Equipment in Benzene Service under Subpart J~~]

18.1.49. Any agitator that is obstructed by equipment or piping that prevents access to the agitator by a monitor probe is exempt from the monitoring requirements of Sections 18.1.45 through 18.1.47 [40 C.F.R. §§ 63.173 (a) through (c)] and 40 C.F.R. § 63.173 (d). Section 18.1.49 does require compliance certification.
[45CSR34, 40 C.F.R. § 63.173 (i)~~, Group 007 and Equipment in Benzene Service under Subpart J~~]

18.1.50. Any agitator that is designated, as described in Section 18.4.2 (7) (i) [40 C.F.R. § 63.181 (b) (7) (i)], as an unsafe-to-monitor agitator is exempt from the requirements of Sections 18.1.45 through 18.1.47 [40 C.F.R. §§ 63.173 (a) through (c)] and 40 C.F.R. § 63.173 (d) if:

(1) The owner or operator of the agitator determines that the agitator is unsafe to monitor because monitoring personnel would be exposed to an immediate danger as a consequence of complying with Sections 18.1.45 through 18.1.47 [40 C.F.R. §§ 63.173 (a) through (c)] and 40 C.F.R. § 63.173 (d); and

(2) The owner or operator of the agitator has a written plan that requires monitoring of the agitator as frequently as practical during safe-to-monitor times, but not more frequently than the periodic monitoring schedule otherwise applicable.

Section 18.1.50 does require compliance certification.

[45CSR34, 40 C.F.R. § 63.173 (j)~~, Group 007 and Equipment in Benzene Service under Subpart J~~]

11. Standards for Connectors in Gas/Vapor and in Light Liquid Service

18.1.51. The owner or operator of a process unit subject to 40 C.F.R. Part 63 Subpart H shall monitor all connectors in gas/vapor and light liquid service, except as provided in 40 C.F.R. § 63.162 (b), and in Sections 18.1.55 through 18.1.57 [40 C.F.R. § 63.174 (f) through (h)], at the intervals specified in Section 18.1.52 [40 C.F.R. § 63.174 (b)].

(1) The connectors shall be monitored to detect leaks by the method specified in Section 18.2.1 [40 C.F.R. § 63.180 (b)].

(2) If an instrument reading greater than or equal to 500 parts per million is measured, a leak is detected.

[45CSR34, 40 C.F.R. § 63.174 (a)~~, Group 007 and Equipment in Benzene Service under Subpart J~~]

18. 1.52. The owner or operator shall monitor for leaks at the intervals specified in either Sections 18.1.52 (1) or (2) [40 C.F.R. §§ 63.174 (b) (1) or (b) (2)] and in Section 18.1.52 (3) [40 C.F.R. § 63.174 (b) (3)].

(1) For each group of existing process units within an existing source, by no later than 12 months after the compliance date, the owner or operator shall monitor all connectors, except as provided in Sections 18.1.55 through 18.1.57 [40 C.F.R. §§ 63.174 (f) through (h)].

(2) For new sources, within the first 12 months after initial start-up or by no later than 12 months after the date of promulgation of a specific subpart that references 40 C.F.R. Part 63 Subpart H, whichever is later, the owner or operator shall monitor all connectors, except as provided in Sections 18.1.55 through 18.1.57 [40 C.F.R. §§ 63.174 (f) through (h)].

(3) After conducting the initial survey required in Sections 18.1.52 (1) or (2) [40 C.F.R. §§ 63.174 (b) (1) or (b) (2)], the owner or operator shall perform all subsequent monitoring of connectors at the frequencies specified in Section 18.1.52 (3) (i) through (3) (v) [40 C.F.R. § 63.174 (b) (3) (i) through (b) (3) (v)], except as provided in Section 18.1.53 (2) [40 C.F.R. § 63.174 (c) (2)]:

(i) Once per year (i.e., 12-month period), if the percent leaking connectors in the process unit was 0.5 percent or greater during the last required annual or biennial monitoring period.

(ii) Once every 2 years, if the percent leaking connectors was less than 0.5 percent during the last required monitoring period. An owner or operator may comply with this paragraph by monitoring at least 40 percent of the connectors in the first year and the remainder of the connectors in the second year. The percent leaking connectors will be calculated for the total of all monitoring performed during the 2-year period.

(iii) If the owner or operator of a process unit in a biennial leak detection and repair program calculates less than 0.5 percent leaking connectors from the 2-year monitoring period, the owner or operator may monitor the connectors one time every 4 years. An owner or operator may comply with the requirements of this paragraph by monitoring at least 20 percent of the connectors each year until all connectors have been monitored within 4 years.

(iv) If a process unit complying with the requirements of Section 18.1.52 [40 C.F.R. § 63.174 (b)] using a 4-year monitoring interval program has greater than or equal to 0.5 percent but less than 1 percent leaking connectors, the owner or operator shall increase the monitoring frequency to one time every 2 years. An owner or operator may comply with the requirements of Sections 18.1.51 through 18.1.59 [40 C.F.R. § 63.174] by monitoring at least 40 percent of the connectors in the first year and the remainder of the connectors in the second year. The owner or operator may again elect to use the provisions of Section 18.1.52 (3) (iii) [40 C.F.R. § 63.174 (b) (3) (iii)] when the percent leaking connectors decreases to less than 0.5 percent.

(v) If a process unit complying with requirements of Section 18.1.52 (3) (iii) [40 C.F.R. § 63.174 (b) (3) (iii)] using a 4-year monitoring interval program has 1 percent or greater leaking connectors, the owner or operator shall increase the monitoring frequency to one time per year. The owner or operator may again elect to use the provisions of Section 18.1.52 (3) (iii) [40 C.F.R. § 63.174 (b) (3) (iii)] when the percent leaking connectors decreases to less than 0.5 percent.

(4) The use of monitoring data generated before April 22, 1994 to qualify for less frequent monitoring is governed by the provisions of Section 18.2.1 (6) [40 C.F.R § 63.180 (b) (6)].

[45CSR34, 40 C.F.R. § 63.174 (b)~~, Group 007 and Equipment in Benzene Service under Subpart J~~]

18.1.53. (1) (i) Except as provided in Section 18.1.53 (1) (ii) [40 C.F.R. § 63.174 (c) (1) (ii)], each connector that has been opened or has otherwise had the seal broken shall be monitored for leaks when it is reconnected or within the first 3 months after being returned to organic hazardous air pollutants service. If the monitoring detects a leak, it shall be repaired according to the provisions of Section 18.1.54 [40 C.F.R. § 63.174 (d)], unless it is determined to be nonrepairable, in which case it is counted as a nonrepairable connector for the purposes of Section 18.1.58 [40 C.F.R. § 63.174 (i) (2)].

(ii) As an alternative to the requirements in Section 18.1.53 (1) (i) [40 C.F.R. § 63.174 (c) (1) (i)], an owner or operator may choose not to monitor connectors that have been opened or otherwise had the seal broken. In this case, the owner or operator may not count nonrepairable connectors for the purposes of Section 18.1.58 [40 C.F.R. § 63.174 (i) (2)].

The owner or operator shall calculate the percent leaking connectors for the monitoring periods described in Section 18.1.52 [40 C.F.R. § 63.174 (b)], by setting the nonrepairable component, CAN, in the equation in Section 18.1.58 [40 C.F.R. § 63.174 (i) (2)] to zero for all monitoring periods.

(iii) An owner or operator may switch alternatives described in Section 18.1.53 (1) (i) and (1) (ii) [40 C.F.R. § 63.174 (c) (1) (i) and (ii)] at the end of the current monitoring period he is in, provided that it is reported as required in 40 C.F.R. § 63.182 and begin the new alternative in annual monitoring. The initial monitoring in the new alternative shall be completed no later than 12 months after reporting the switch.

(2) As an alternative to the requirements of Section 18.1.52 (3) [40 C.F.R. § 63.174 (b) (3)], each screwed connector 2 inches or less in nominal inside diameter installed in a process unit before the dates specified in Section 18.1.53 (2) (iii) or (2) (iv) [40 C.F.R. § 63.174 (c) (2) (iii) or (c) (2) (iv)] may:

(i) Comply with the requirements of 40 C.F.R. § 63.169, and

(ii) Be monitored for leaks within the first 3 months after being returned to organic hazardous air pollutants service after having been opened or otherwise had the seal broken. If that monitoring detects a leak, it shall be repaired according to the provisions of Section 18.1.54 [40 C.F.R. § 63.174 (d)].

(iii) For sources subject to 40 C.F.R. Part 63 Subparts F and I, the provisions of Section 18.1.53 (2) [40 C.F.R. § 63.174 (c) (2)] apply to screwed connectors installed before December 31, 1992.

(iv) For sources not identified in Section 18.1.53 (2) (iii) [40 C.F.R. § 63.174 (c) (2) (iii)], the provisions of Section 18.1.53 (2) [40 C.F.R. § 63.174 (c) (2)] apply to screwed connectors installed before the date of proposal of the applicable subpart of 40 C.F.R. Part 63 that references 40 C.F.R. Part 63 Subpart H.

[45CSR34, 40 C.F.R. § 63.174 (c)~~, Group 007 and Equipment in Benzene Service under Subpart J~~]

18.1.54. When a leak is detected, it shall be repaired as soon as practicable, but no later than 15 calendar days after the leak is detected, except as provided in Section 18.1.56 [40 C.F.R. § 63.174 (g)] and in 40 C.F.R. § 63.171. A first attempt at repair shall be made no later than 5 calendar days after the leak is detected.
[45CSR34, 40 C.F.R. § 63.174 (d)~~, Group 007 and Equipment in Benzene Service under Subpart J~~]

18.1.55. Any connector that is designated, as described in Section 18.4.2 (7) (i) [40 C.F.R. § 63.181 (b) (7) (i)], as an unsafe-to-monitor connector is exempt from the requirements of Section 18.1.51 [40 C.F.R. § 63.174 (a)] if:

(1) The owner or operator determines that the connector is unsafe to monitor because personnel would be exposed to an immediate danger as a result of complying with Sections 18.1.51 through 18.1.54 [40 C.F.R. § 63.174 (a) through (d)] and 40 C.F.R. § 63.174 (e); and

(2) The owner or operator has a written plan that requires monitoring of the connector as frequently as practicable during safe to monitor periods, but not more frequently than the periodic schedule otherwise applicable.

[45CSR34, 40 C.F.R. § 63.174 (f)~~, Group 007 and Equipment in Benzene Service under Subpart J~~]

18.1.56. Any connector that is designated, as described in Section 18.4.2 (7) (iii) [40 C.F.R. § 63.181 (b) (7) (iii)], as an unsafe-to-repair connector is exempt from the requirements of Sections 18.1.51 through 18.1.54 [40 C.F.R. § 63.174 (a) and (d)] and 40 C.F.R. § 63.174 (e) if:

(1) The owner or operator determines that repair personnel would be exposed to an immediate danger as a consequence of complying with Section 18.1.54 [40 C.F.R. § 63.174 (d)]; and

(2) The connector will be repaired before the end of the next scheduled process unit shutdown.

[45CSR34, 40 C.F.R. § 63.174 (g)~~, Group 007 and Equipment in Benzene Service under Subpart J~~]

18.1.57. (1) Any connector that is inaccessible or is ceramic or ceramic-lined (e.g., porcelain, glass, or glass-lined), is exempt from the monitoring requirements of Sections 18.1.51 and 18.1.53 [40 C.F.R. § 63.174 (a) and (c)] and from the recordkeeping and reporting requirements of Sections 18.4.1 through 18.4.6 [40 C.F.R. § 63.181] and 40 C.F.R. § 63.182. An inaccessible connector is one that is:

(i) Buried;

(ii) Insulated in a manner that prevents access to the connector by a monitor probe;

(iii) Obstructed by equipment or piping that prevents access to the connector by a monitor probe;

(iv) Unable to be reached from a wheeled scissor-lift or hydraulic-type scaffold which would allow access to connectors up to 7.6 meters (25 feet) above the ground;

(v) Inaccessible because it would require elevating the monitoring personnel more than 2 meters above a permanent support surface or would require the erection of scaffold; or

(vi) Not able to be accessed at any time in a safe manner to perform monitoring. Unsafe access includes, but is not limited to, the use of a wheeled scissor-lift on unstable or uneven terrain, the use of a motorized man-lift basket in areas where an ignition potential exists, or access would require near proximity to hazards such as electrical lines, or would risk damage to equipment.

Section 18.1.57 (1) does require compliance certification.

(2) If any inaccessible or ceramic or ceramic-lined connector is observed by visual, audible, olfactory, or other means to be leaking, the leak shall be repaired as soon as practicable, but no later than 15 calendar days after the leak is detected, except as provided in 40 C.F.R. § 63.171 and Section 18.1.56 [40 C.F.R. § 63.174 (g)].

(3) A first attempt at repair shall be made no later than 5 calendar days after the leak is detected.

[45CSR34, 40 C.F.R. § 63.174 (h)~~, Group 007 and Equipment in Benzene Service under Subpart J~~]

18.1.58. For use in determining the monitoring frequency, as specified in Section 18.1.52 [40 C.F.R. § 63.174 (b)], the percent leaking connectors shall be calculated as specified:

For subsequent monitoring periods, use the following equation:

$$\% CL = [(CL - CAN)/(Ct + CC)] \times 100$$

where:

% CL = Percent leaking connectors as determined through periodic monitoring required in Sections 18.1.51 and 18.1.52 [40 C.F.R. § 63.174 (a) and (b)].

CL = Number of connectors, including nonrepairables, measured at 500 parts per million or greater, by the method specified in Section 18.2.1 [40 C.F.R. § 63.180 (b)].

CAN	=	Number of allowable nonrepairable connectors, as determined by monitoring required in Sections 18.1.52 (3) and 18.1.53 [40 C.F.R. § 63.174 (b) (3) and (c)], not to exceed 2 percent of the total connector population, Ct.
Ct	=	Total number of monitored connectors, including nonrepairables, in the process unit.
CC	=	Optional credit for removed connectors = 0.67 × net number (i.e., total removed—total added) of connectors in organic hazardous air pollutants service removed from the process unit after the compliance date set forth in the applicable subpart for existing process units, and after the date of initial start-up for new process units. If credits are not taken, then CC= 0.

[45CSR34, 40 C.F.R. § 63.174 (i) (2)~~, Group 007 and Equipment in Benzene Service under Subpart J~~]

18.1.59. Optional credit for removed connectors.

If an owner or operator eliminates a connector subject to monitoring under Section 18.1.52 [40 C.F.R. § 63.174 (b)], the owner or operator may receive credit for elimination of the connector, as described in Sections 18.1.58 [40 C.F.R. § 63.174 (i)], provided the requirements in Sections 18.1.59 (1) and (2) [40 C.F.R. § 63.174 (j) (1) through (j) (4)] are met.

(1) The connector was welded after the date of proposal of the specific subpart that references 40 C.F.R. Part 63 Subpart H.

(2) The integrity of the weld is demonstrated by monitoring it according to the procedures in Section 18.2.1 [40 C.F.R. § 63.180 (b)] or by testing using X-ray, acoustic monitoring, hydrotesting, or other applicable method.

(3) Welds created after the date of proposal but before the date of promulgation of a specific 40 C.F.R. Part 63 Subpart that references 40 C.F.R. Part 63 Subpart H are monitored or tested by 3 months after the compliance date specified in the applicable 40 C.F.R. Part 63 Subpart.

(4) Welds created after promulgation of the 40 C.F.R. Part 63 Subpart that references 40 C.F.R. Part 63 Subpart H are monitored or tested within 3 months after being welded.

(5) If an inadequate weld is found or the connector is not welded completely around the circumference, the connector is not considered a welded connector and is therefore not exempt from the provisions of 40 C.F.R. Part 63 Subpart H.

Section 18.1.59 does require compliance certification.

[45CSR34, 40 C.F.R. § 63.174 (j)~~, Group 007 and Equipment in Benzene Service under Subpart~~]

18.2. Monitoring Requirements

18.2.1. Monitoring, as required under 40 C.F.R. Part 63 Subpart H, shall comply with the following requirements:

(1) Monitoring shall comply with Method 21 of 40 C.F.R. Part 60, Appendix A.

(2) (i) Except as provided for in Section 18.2.1 (2) (ii) [40 C.F.R. § 63.180 (b) (2) (ii)], the detection instrument shall meet the performance criteria of Method 21 of 40 C.F.R. Part 60, Appendix A, except the instrument response factor criteria in Section 3.1.2 (a) of Method 21 shall be for the average composition of the process fluid not each individual VOC in the stream. For process streams that contain nitrogen, water, air, or other inerts which are not organic HAP's or VOC's, the average stream response factor may be calculated on an inert-free basis. The response factor may be determined at any concentration for which monitoring for leaks will be conducted.

(ii) If no instrument is available at the plant site that will meet the performance criteria specified in Section 18.2.1 (2) (i) [40 C.F.R. § 63.180 (b) (2) (i)], the instrument readings may be adjusted by multiplying by the average response factor of the process fluid, calculated on an inert-free basis as described in Section 18.2.1 (2) (i) [40 C.F.R. § 63.180 (b) (2) (i)].

(3) The instrument shall be calibrated before use on each day of its use by the procedures specified in Method 21 of 40 C.F.R. Part 60, Appendix A.

(4) Calibration gases shall be:

(i) Zero air (less than 10 parts per million of hydrocarbon in air); and

(ii) Mixtures of methane in air at the concentrations specified in Section 18.2.1 (4) (ii) (A) through (4) (ii) (C) [40 C.F.R. § 63.180 (b) (4) (ii) (A) through (b) (4) (ii) (C)]. A calibration gas other than methane in air may be used if the instrument does not respond to methane or if the instrument does not meet the performance criteria specified in Section 18.2.1 (2) (i) [40 C.F.R. § 63.180 (b) (2) (i)]. In such cases, the calibration gas may be a mixture of one or more of the compounds to be measured in air.

(A) For Phase III, a mixture of methane or other compounds, as applicable, and air at a concentration of approximately, but less than, 10,000 parts per million methane for agitators; 2,000 parts per million for pumps in food/medical service; 5,000 parts per million for pumps in polymerizing monomer service; 1,000 parts per million for all other pumps; and 500 parts per million for all other equipment, except as provided in Section 18.2.1 (4) (iii) [40 C.F.R. § 63.180 (b) (4) (iii)].

(iii) The instrument may be calibrated at a higher methane concentration than the concentration specified for that piece of equipment. The concentration of the calibration gas may exceed the concentration specified as a leak by no more than 2,000 parts per million. If the monitoring instrument's design allows for multiple calibration scales, then the lower scale shall be calibrated with a calibration gas that is no higher than 2,000 parts per million above the concentration specified as a leak and the highest scale shall be calibrated with a calibration gas that is approximately equal to 10,000 parts per million. If only one scale on an instrument will be used during monitoring, the owner or operator need not calibrate the scales that will not be used during that day's monitoring.

(5) Monitoring shall be performed when the equipment is in organic HAP service, in use with an acceptable surrogate volatile organic compound which is not an organic HAP, or is in use with any other detectable gas or vapor.

(6) Monitoring data that do not meet the criteria specified in Sections 18.2.1 (1) through (5) [40 C.F.R. §§ 63.180 (b) (1) through (b) (5)] may be used to qualify for less frequent monitoring under the provisions in Section 18.1.29 (2) and (3) [40 C.F.R. §§ 63.168 (d) (2) and (d) (3)] or Sections 18.1.52 (3) (ii) or (3) (iii) [40 C.F.R. §§ 63.174 (b) (3) (ii) or (b) (3) (iii)] provided the data meet the conditions specified in Sections 18.2.1 (6) (i) and (6) (ii) [40 C.F.R. §§ 63.180 (b) (6) (i) and (b) (6) (ii)].

(i) The data were obtained before April 22, 1994.

(ii) The departures from the criteria specified in Sections 18.2.1 (1) through (5) [40 C.F.R. §§ 63.180 (b) (1) through (b) (5)] or from the specified monitoring frequency of 40 C.F.R. § 63.168 (c) are minor and do not significantly affect the quality of the data. Examples of minor departures are monitoring at a slightly different frequency (such as every six weeks instead of monthly or quarterly), following the performance criteria of section 3.1.2(a) of Method 21 of Appendix A of 40 C.F.R. Part 60 instead of Section 18.2.1 (2) [40 C.F.R. §§ 63.180 (b) (2)], or monitoring at a different leak definition if the data would indicate the presence or absence of a leak at the concentration specified in 40 C.F.R. Part 63 Subpart H. Failure to use a calibrated instrument is not considered a minor departure.

[45CSR34, 40 C.F.R. § 63.180 (b)~~, Group 007 and Equipment in Benzene Service under Subpart~~]

18.2.2. When equipment is monitored for compliance as required in 40 C.F.R. § 63.164 (i) and Section 18.1.15 [40 C.F.R. § 63.165 (a)], and 40 C.F.R. § 63.172 (f) or when equipment subject to a leak definition of 500 ppm is monitored for leaks as required by 40 C.F.R. Part 63 Subpart H, the owner or operator may elect to adjust or not to adjust the instrument readings for background. If an owner or operator elects to not adjust instrument readings for background, the owner or operator shall monitor the equipment according to the procedures specified in Sections 18.2.1 (1) through (4) [40 C.F.R. §§ 63.180 (b) (1) through (b) (4)]. In such case, all instrument readings shall be compared directly to the applicable leak definition to determine whether there is a leak. If an owner or operator elects to adjust instrument readings for background, the owner or operator shall monitor the equipment according to the procedures specified in Sections 18.2.2 (1) through (4) [40 C.F.R. §§ 63.180 (c) (1) through (c) (4)].

(1) The requirements of Sections 18.2.1 (1) through (4) [40 C.F.R. §§ 63.180 (b) (1) through (b) (4)] shall apply.

(2) The background level shall be determined, using the same procedures that will be used to determine whether the equipment is leaking.

(3) The instrument probe shall be traversed around all potential leak interfaces as close to the interface as possible as described in Method 21 of 40 C.F.R. Part 60, Appendix A.

(4) The arithmetic difference between the maximum concentration indicated by the instrument and the background level is compared with 500 parts per million for determining compliance.

[45CSR34, 40 C.F.R. § 63.180 (c)~~, Group 007 and Equipment in Benzene Service under Subpart~~]

18.3. Testing Requirements

18.3.1. Each owner or operator subject to the provisions of 40 C.F.R. Part 63 Subpart H shall comply with the test methods and procedures requirements provided in 40 C.F.R. § 63.180.
[45CSR34, 40 C.F.R. § 63.180 (a), All Groups]

18.3.2. (1) Each piece of equipment within a process unit that can reasonably be expected to contain equipment in organic HAP service is presumed to be in organic HAP service unless an owner or operator demonstrates that the piece of equipment is not in organic HAP service. For a piece of equipment to be considered not in organic HAP service, it must be determined that the percent organic HAP content can be reasonably expected not to exceed 5 percent by weight on an annual average basis. For purposes of determining the percent organic HAP content of the process fluid that is contained in or contacts equipment, Method 18 of 40 C.F.R. Part 60, Appendix A shall be used.

(2) (i) An owner or operator may use good engineering judgment rather than the procedures in Section 18.3.2 (1) [40 C.F.R. § 63.180 (d) (1)] to determine that the percent organic HAP content does not exceed 5 percent by weight. When an owner or operator and the Administrator do not agree on whether a piece of equipment is not in organic HAP service, however, the procedures in Section 18.3.2 (1) [40 C.F.R. § 63.180 (d) (1)] shall be used to resolve the disagreement.

(ii) Conversely, the owner or operator may determine that the organic HAP content of the process fluid does not exceed 5 percent by weight by, for example, accounting for 98 percent of the content and showing that organic HAP is less than 3 percent.

(3) If an owner or operator determines that a piece of equipment is in organic HAP service, the determination can be revised after following the procedures in Section 18.3.2 (1) [40 C.F.R. § 63.180 (d) (1)], or by documenting that a change in the process or raw materials no longer causes the equipment to be in organic HAP service.

(4) Samples used in determining the percent organic HAP content shall be representative of the process fluid that is contained in or contacts the equipment.

[45CSR34, 40 C.F.R. § 63.180 (d), All Groups]

18.4. Recordkeeping Requirements

18.4.1. An owner or operator of more than one process unit subject to the provisions of 40 C.F.R. Part 63 Subpart H may comply with the recordkeeping requirements for these process units in one recordkeeping system if the system identifies each record by process unit and the program being implemented (e.g., quarterly monitoring, quality improvement) for each type of equipment. All records and information required by 40 C.F.R. § 63.181 shall be maintained in a manner that can be readily accessed at the plant site. This could include physically locating the records at the plant site or accessing the records from a central location by computer at the plant site.
[45CSR34, 40 C.F.R. § 63.181 (a)~~, Group 007 – Equipment associated with the Naphthalene Distillation Unit and Equipment in Benzene Service under Subpart J~~]

18.4.2. Except as provided in 40 C.F.R. § 63.181 (e), the following information pertaining to all equipment in each process unit subject to the requirements in 40 C.F.R. §§ 63.162 through 63.174 shall be recorded:

(1) (i) A list of identification numbers for equipment (except connectors exempt from monitoring and recordkeeping identified in 40 C.F.R. § 63.174 and instrumentation systems) subject to the requirements of 40 C.F.R. Part 63 Subpart H. Connectors need not be individually identified if all connectors in a designated area or length of pipe subject to the provisions of 40 C.F.R. Part 63 Subpart H are identified as a group, and the number of connectors subject is indicated. With respect to connectors, the list shall be complete no later than the completion of the initial survey required by Section 18.1.52 (1) or (2) [40 C.F.R. § 63.174 (b) (1) or (b) (2)].

(ii) A schedule by process unit for monitoring connectors subject to the provisions of Section 18.1.51 [40 C.F.R. § 63.174 (a)] and valves subject to the provisions of Section 18.1.29 [40 C.F.R. § 63.168 (d)].

(iii) Physical tagging of the equipment to indicate that it is in organic HAP service is not required. Equipment subject to the provisions of 40 C.F.R. Part 63 Subpart H may be identified on a plant site plan, in log entries, or by other appropriate methods.

(3) (i) A list of identification numbers for pressure relief devices subject to the provisions in Section 18.1.15 [40 C.F.R. § 63.165 (a)].

(ii) A list of identification numbers for pressure relief devices equipped with rupture disks, under the provisions of Section 18.1.18 [40 C.F.R. § 63.165 (d)].

(4) Identification of instrumentation systems subject to the provisions of 40 C.F.R. Part 63 Subpart H. Individual components in an instrumentation system need not be identified.

(5) Identification of screwed connectors subject to the requirements of Section 18.1.53 (2) [40 C.F.R. § 63.174 (c) (2)]. Identification can be by area or grouping as long as the total number within each group or area is recorded.

(7) The following information pertaining to all pumps subject to the provisions of Section 18.1.14 [40 C.F.R. § 63.163 (j)], valves subject to the provisions of Sections 18.1.33 and 18.1.34 [40 C.F.R. §§ 63.168 (h) and (i)], agitators subject to the provisions of Sections 18.1.48 through 18.1.50 [40 C.F.R. §§ 63.173 (h) through (j)], and connectors subject to the provisions of Sections 18.1.55 and 18.1.56 [40 C.F.R. §§ 63.174 (f) and (g)] shall be recorded:

(i) Identification of equipment designated as unsafe to monitor, difficult to monitor, or unsafe to inspect and the plan for monitoring or inspecting this equipment.

(ii) A list of identification numbers for the equipment that is designated as difficult to monitor, an explanation of why the equipment is difficult to monitor, and the planned schedule for monitoring this equipment.

(iii) A list of identification numbers for connectors that are designated as unsafe to repair and an explanation why the connector is unsafe to repair.

(8) (i) A list of valves removed from and added to the process unit, as described in Section 18.1.30 (1) [40 C.F.R. § 63.168 (e) (1)], if the net credits for removed valves is expected to be used.

(ii) A list of connectors removed from and added to the process unit, as described in Section 18.1.58 (1) [40 C.F.R. § 63.174 (i) (1)], and documentation of the integrity of the weld for any removed connectors, as required in Section 18.1.59 [40 C.F.R. § 63.174 (j)]. This is not required unless the net credits for removed connectors is expected to be used.

(9) (i) For batch process units that the owner or operator elects to monitor as provided under 40 C.F.R. § 63.178 (c), a list of equipment added to batch product process units since the last monitoring period required in 40 C.F.R. §§ 63.178 (c) (3) (ii) and (3) (iii).

(ii) Records demonstrating the proportion of the time during the calendar year the equipment is in use in a batch process that is subject to the provisions of 40 C.F.R. Part 63 Subpart H. Examples of suitable documentation are records of time in use for individual pieces of equipment or average time in use for the process unit. These records are not required if the owner or operator does not adjust monitoring frequency by the time in use, as provided in 40 C.F.R. § 63.178 (c) (3) (iii).

[45CSR34, 40 C.F.R. § 63.181 (b)~~, Group 007 – Equipment associated with the Naphthalene Distillation Unit and Equipment in Benzene Service under Subpart J~~]

18.4.3. For visual inspections of equipment subject to the provisions of 40 C.F.R. Part 63 Subpart H (e.g., Section 18.1.11 (3) [40 C.F.R. § 63.163 (b) (3)], 40 C.F.R. § 63.163 (e) (4) (i)), the owner or operator shall document that the inspection was conducted and the date of the inspection. The owner or operator shall maintain records as specified in Section 18.4.4 [40 C.F.R. § 63.181 (d)] for leaking equipment identified in this inspection, except as provided in 40 C.F.R. § 63.181 (e). These records shall be retained for 2 years.
[45CSR34, 40 C.F.R. § 63.181 (c)~~, Group 007 – Equipment associated with the Naphthalene Distillation Unit and Equipment in Benzene Service under Subpart J~~]

18.4.4. When each leak is detected as specified in 40 C.F.R. § 63.163 and 40 C.F.R. § 63.164; 40 C.F.R. §§ 63.168 and 63.169; 40 C.F.R. § 63.172 and 40 C.F.R. §§ 63.173 through 63.174, the following information shall be recorded and kept for 2 years:

(1) The instrument and the equipment identification number and the operator name, initials, or identification number.

(2) The date the leak was detected and the date of first attempt to repair the leak.

(3) The date of successful repair of the leak.

(4) Maximum instrument reading measured by Method 21 of 40 CFR part 60, appendix A after it is successfully repaired or determined to be nonrepairable.

(5) "Repair delayed" and the reason for the delay if a leak is not repaired within 15 calendar days after discovery of the leak.

(i) The owner or operator may develop a written procedure that identifies the conditions that justify a delay of repair. The written procedures may be included as part of the startup/shutdown/malfunction plan, required by 40 C.F.R. § 63.6 (e) (3), for the source or may be part of a separate document that is maintained at the plant site. In such cases, reasons for delay of repair may be documented by citing the relevant sections of the written procedure.

(ii) If delay of repair was caused by depletion of stocked parts, there must be documentation that the spare parts were sufficiently stocked on-site before depletion and the reason for depletion.

(6) Dates of process unit shutdowns that occur while the equipment is unrepaired.

(7) (i) Identification, either by list, location (area or grouping), or tagging of connectors that have been opened or otherwise had the seal broken since the last monitoring period required in Section 18.1.52 [40 C.F.R. § 63.174 (b)], as described in Section 18.1.53 (1) [40 C.F.R. § 63.174 (c) (1)], unless the owner or operator elects to comply with the provisions of Section 18.1.53 (1) (ii) [40 C.F.R. § 63.174 (c) (1) (ii)].

(ii) The date and results of monitoring as required in Section 18.1.53 [40 C.F.R. § 63.174 (c)]. If identification of connectors that have been opened or otherwise had the seal broken is made by location under Section 18.4.4 (7) (i) [40 C.F.R. § 63.181 (d) (7) (i)], then all connectors within the designated location shall be monitored.

(8) The date and results of the monitoring required in 40 C.F.R. § 63.178 (c) (3) (i) for equipment added to a batch process unit since the last monitoring period required in 40 C.F.R. §§ 63.178 (c) (3) (ii) and (c) (3) (iii). If no leaking equipment is found in this monitoring, the owner or operator shall record that the inspection was performed. Records of the actual monitoring results are not required.

(9) Copies of the periodic reports as specified in Section 18.5.1 [40 C.F.R. § 63.182 (d)], if records are not maintained on a computerized database capable of generating summary reports from the records.

[45CSR34, 40 C.F.R. § 63.181 (d)~~, Group 007 – Equipment associated with the Naphthalene Distillation Unit and Equipment in Benzene Service under Subpart J~~]

18.4.5. The dates and results of each compliance test required for compressors subject to the provisions in 40 C.F.R. § 63.164 (i) and the dates and results of the monitoring following a pressure release for each pressure relief device subject to the provisions in Sections 18.1.15 and 18.1.16 [40 C.F.R. §§ 63.165 (a) and (b)]. The results shall include:

(1) The background level measured during each compliance test.

(2) The maximum instrument reading measured at each piece of equipment during each compliance test.

[45CSR34, 40 C.F.R. § 63.181 (f)~~, Group 007 – Equipment associated with the Naphthalene Distillation Unit and Equipment in Benzene Service under Subpart J~~]

18.4.6. The owner or operator of equipment in heavy liquid service shall comply with the requirements of either Sections 18.4.6 (1) or (2) [40 C.F.R. §§ 63.181 (i) (1) or (i) (2)], as provided in Section 18.4.6 (3) [40 C.F.R. § 63.181 (i) (3)].

(1) Retain information, data, and analyses used to determine that a piece of equipment is in heavy liquid service.

(2) When requested by the Administrator, demonstrate that the piece of equipment or process is in heavy liquid service.

(3) A determination or demonstration that a piece of equipment or process is in heavy liquid service shall include an analysis or demonstration that the process fluids do not meet the definition of "in light liquid service." Examples of information that could document this include, but are not limited to, records of chemicals purchased for the process, analyses of process stream composition, engineering calculations, or process knowledge.

[45CSR34, 40 C.F.R. § 63.181 (i)~~, Group 007 – Equipment associated with the Naphthalene Distillation Unit and Equipment in Benzene Service under Subpart J~~]

18.5. Reporting Requirements

18.5.1. The owner or operator of a source subject to 40 C.F.R. Part 63 Subpart H shall submit Periodic Reports.

(1) A report containing the information in Sections 18.5.1 (2), (3), and (4) [40 C.F.R. §§ 63.182 (d) (2), (d) (3), and (d) (4)] shall be submitted semiannually starting 6 months after the Notification of Compliance Status, as required in 40 C.F.R. § 63.182 (c). The first periodic report shall cover the first 6 months after the compliance date specified in 40 C.F.R. § 63.100 (k) (3). Each subsequent periodic report shall cover the 6 month period following the preceding period.

(2) For each process unit complying with the provisions of 40 C.F.R. § 63.163 through 40 C.F.R. § 63.174, the summary information listed in Sections 18.5.1 (2) (i) through (iv), (vii) through (xvi) [40 C.F.R. §§ 63.182 (d) (2) (i) through (iv), (vii) through (xvi)] for each monitoring period during the 6-month period.

(i) The number of valves for which leaks were detected as described in Section 18.1.28 [40 C.F.R. § 63.168 (b)], the percent leakers, and the total number of valves monitored;

(ii) The number of valves for which leaks were not repaired as required in Section 18.1.31 [40 C.F.R. § 63.168 (f)], identifying the number of those that are determined nonrepairable;

(iii) The number of pumps for which leaks were detected as described in Section 18.1.11 [40 C.F.R. § 63.163 (b)], the percent leakers, and the total number of pumps monitored;

(iv) The number of pumps for which leaks were not repaired as required in Section 18.1.12 [40 C.F.R. § 63.163 (c)];

(vii) The number of agitators for which leaks were detected as described in Sections 18.1.45 and 21.1.46 [40 C.F.R. §§ 63.173 (a) and (b)];

(viii) The number of agitators for which leaks were not repaired as required in Section 18.1.47 [40 C.F.R. § 63.173 (c)];

(ix) The number of connectors for which leaks were detected as described in Section 18.1.51 [40 C.F.R. § 63.174 (a)], the percent of connectors leaking, and the total number of connectors monitored;

(x) [Reserved]

(xi) The number of connectors for which leaks were not repaired as required in Section 18.1.54 [40 C.F.R. § 63.174 (d)] identifying the number of those that are determined nonrepairable;

(xii) [Reserved]

(xiii) The facts that explain any delay of repairs and, where appropriate, why a process unit shutdown was technically infeasible.

(xiv) The results of all monitoring to show compliance with 40 C.F.R. § 63.164 (i) and Section 18.1.15 [40 C.F.R. § 63.165 (a)] and 40 C.F.R. § 63.172 (f) conducted within the semiannual reporting period.

(xv) If applicable, the initiation of a monthly monitoring program under Section 18.1.29 (1) (i) [40 C.F.R. § 63.168 (d) (1) (i)], or a quality improvement program under either 40 C.F.R. §§ 63.175 or 40 C.F.R. § 63.176.

(xvi) If applicable, notification of a change in connector monitoring alternatives as described in Section 18.1.53 (1) [40 C.F.R. § 63.174 (c) (1)].

(xvii) If applicable, the compliance option that has been selected under 40 C.F.R. § 63.172 (n).

(3) For owners or operators electing to meet the requirements of 40 C.F.R. § 63.178 (b), the report shall include the information listed in Sections 18.5.1 (3) (i) through (v) [40 C.F.R. §§ 63.182 (d) (3) (i) through (v)] for each process unit.

(i) Batch product process equipment train identification;

(ii) The number of pressure tests conducted;

(iii) The number of pressure tests where the equipment train failed the pressure test;

(iv) The facts that explain any delay of repairs; and

(v) The results of all monitoring to determine compliance with 40 C.F.R. § 63.172 (f).

(4) The information listed in 40 C.F.R. § 63.182 (c) for the Notification of Compliance Status for process units with later compliance dates. Any revisions to items reported in earlier Notification of Compliance Status, if the method of compliance has changed since the last report.

[45CSR34, 40 C.F.R. § 63.182 (d)~~, Group 007 – Equipment associated with the Naphthalene Distillation Unit and Equipment in Benzene Service under Subpart J~~]

19.0 Source-Specific Requirements [Control Equipment - Flare (774a), Thermal Oxidizer (778), Scrubber E (777)] ~~Miscellaneous Organic Chemical Production and Processes (MON) - Applicable to this Facility]~~

19.1. Standards and Limitations

19.1.1. The thermal oxidizer and flare shall be designed, maintained and operated so as to achieve a minimum destruction efficiency of 98% for VOCs and HAPs

1. The combustion temperature of the thermal oxidizer (based on a 24 hour average) must not be lower than the combustion temperature at which the oxidizer was operating during the most recent performance test which showed compliance with the limit of Section 19.1.1.

2. In order to maintain a net heating value of at least 200 BTUs per cubic foot for the flare fuel, the permittee shall burn at least 25% by volume natural gas with the waste gas (a ratio of 1 to 3). The 1 to 3 ratio will be determined on an hourly basis, using the calculated hourly fuel flow values of the waste and natural gas.

3. The exit velocity of the flare shall be less than 60 feet per second. The exit velocity shall be determined by dividing the volumetric flow rate of gas being combusted (determined by USEPA Method 2) by the cross-sectional area of the flare tip. Compliance with this provision will be based on a one hour average.

Note: The most recent test temperature for the thermal oxidizer is 1308 ^{o}F. This test was conducted on October 31, 2008.

[45CSR13, R13-2274, 4.1.20., (778, 774a)]

~~The permittee shall comply with all applicable requirements of 40 C.F.R. 63, Subpart FFFF - "National Emission Standards for Hazardous Air Pollutants: Miscellaneous Organic Chemical Manufacture" no later than November 10, 2006 or any revised compliance date published by the USEPA. The permittee shall submit a complete application for a significant Title V permit modification to include the specific requirements of 40 C.F.R. 63, Subpart FFFF in the operating permit on or prior to May 10, 2006 or 6 months prior to any revised compliance date published by the USEPA.~~
~~[45CSR§30-6.5.2.b., 45CSR34, 40 C.F.R. §§ 63.2445 (b), and 63.2515 (b) (1), 45CSR§30-6.5.b.2, Groups 002, 003, 004, 006, 009, 00A, 00B, 00C, 00D, and 00E]~~

19.1.2. Emissions from the flares/Thermal Oxidizer (including SO_2 from Naphthalene and tar distillation) combined shall not exceed the following:

Pollutant	Emissions lb/hr	Emissions tons/year
Particulate Matter	0.28	1.25
Nitrogen Oxides	4.85	21.29
Sulfur Dioxide	52.3	229.3
Carbon Monoxide	5.72	25.11
Volatile Organic Compounds	9.93	8.32
Benzene	2.47	1.95
Naphthalene	2.19	2.45
Total Hazardous Air Pollutants	7.42	6.17

[45CSR13, R13-2274, 4.1.2., 4.1.3., 4.1.4., (778, 774a)]

19.1.3. The flares must be operated with no visible emissions, except for periods not to exceed a total of 5 minutes during any 2 consecutive hours.
[45CSR13, R13-2274, 4.1.21., (774a)]

19.1.4. No person shall cause or allow particulate matter to be discharged from any incinerator into the open air in excess of the quantity determined by use of the following formula:

Emissions (lb/hr) = F x Incinerator Capacity (tons/hr)

Where, the factor, F, is as indicated in Table I below:

Table I: Factor, F, for Determining Maximum Allowable Particulate Emissions

Incinerator Capacity	Factor F
A. Less than 15,000 lbs/hr	5.43
B. 15,000 lbs/hr or greater	2.72

Compliance shall demonstrated by complying with the more stringent limit set forth in Section 19.1.3.

[45CSR§6-4.1., (778, 774a)]

19.1.5. No person shall cause or allow emission of smoke into the atmosphere from any incinerator which is twenty percent (20%) opacity or greater.
[45CSR§6-4.3., (778, 774a)]

19.1.6. The provisions of Section 19.1.5 [45CSR§6-4.3.] shall not apply to smoke which is less than forty percent (40%) opacity, for a period or periods aggregating no more than eight (8) minutes per start-up.
[45CSR§6-4.4., (778, 774a)]

19.1.7. Incinerators, including all associated equipment and grounds, shall be designed, operated and maintained so as to prevent the emission of objectionable odors.
[45CSR§6-4.6., (778, 774a)]

19.1.8. The owner or operator of an incinerator shall post operating instructions for the incinerator clearly visible by the operator from the incinerator charging area. Such posting shall provide instruction for proper operation in order to prevent a violiation of 45CSR6.
[45CSR§6-4.9., (778)]

19.1.9. The owner and operator of an incinerator shall design, construct and operate the facility in accordance with all applicable rules promulgated by the Secretary including, but not limited to, 45CSR13, 45CSR14, 45CSR18, 45CSR19, 45CSR25, 45CSR30 and 45CSR34, as applicable.
[45CSR§6-4.10., (778, 774a), State-Enforceable only]

19.1.10. Due to unavoidable malfunction of equipment, emissions exceeding any limitation in 45CSR6 may be permitted by the Secretary for periods not to exceed five (5) days upon specific application to the Secretary. Such application shall be made within twenty-four (24) hours of the malfunction. In cases of major equipment failure, additional time periods may be granted by the Secretary provided a corrective program has been submitted by the owner or operator and approved by the Secretary.
[45CSR§6-8.2., (778, 774a)]

19.1.11. Emissions from Scrubber E shall not exceed the following:

Pollutant	Emissions lb/hr	Emissions tons/year
Volatile Organic Compounds	5.82	4.46
Total Hazardous Air Pollutants	4.99	3.80

[45CSR13, R13-2274, 4.1.6., (777)]

19.1.12. The outlet temperature of Scrubber E shall not exceed 130 °F. If during the course of monitoring the temperature in accordance with Section 19.2.3, the temperature exceeds 130 °F the permittee will perform testing as outlined in Section 19.3.1.
[45CSR13, R13-2274, 4.1.30., (777)]

19.1.13. Operation and Maintenance of Air Pollution Control Equipment. The permittee shall, to the extent practicable, install, maintain, and operate the thermal oxidizer, flare, Scrubber E, and the pencil pitch fabric filter baghouse and associated monitoring equipment in a manner consistent with safety and good air pollution control practices for minimizing emissions, or comply with any more stringent limits set forth in this permit or as set forth by any State rule, Federal regulation, or alternative control plan approved by the Secretary.
[45CSR13, R13-2274, 4.1.32., (774a, 778, 777, 771)]

19.1.14. If the Piggy back flare is brought back into service, it shall be subject to all of the standards, monitoring, recordkeeping and reporting as the Main flare.
[45CSR13, R13-2274, 4.1.31., (774b)]

19.2. Monitoring Requirements

19.2.1. **Monitoring of the Thermal Oxidizer**

a. Combustion temperature of the thermal oxidizer shall be monitored continuously at the firebox or ductwork immediately downstream of the firebox.

b. The temperature in 19.2.1.a shall be recorded at least once every 15-minutes using a data acquisition system.

c. A daily 24-hour average temperature shall be calculated from data in 19.2.1.b.

[45CSR13, R13-2274, 4.2.3, (778)]

19.2.2. Monitoring of Flares

a. For each flare, the presence of a pilot or flare flame shall be monitored continuously using a thermocouple, ultraviolet beam sensor or infrared sensor.

b. Monitoring data from 19.2.2.a shall be recorded at least once every hour to indicate whether the monitor is continuously operating and whether a flame is present.

c. Flow of the natural gas and waste gas to the Main Flare will be continuously measured using in-line flow meters and automatically recorded every hour. The Pitot tube measuring the flow

of waste gas shall be checked periodically for pluggage. Initially the Pitot tube shall be checked quarterly. If no pluggage is observed during the first four quarterly checks the frequency may be reduced to semi-annually. If no pluggage is observed during the first two semi-annual checks, the frequency may be reduced to yearly. If any subsequent annual inspection shows pluggage, the inspection schedule shall reset to quarterly checks until four consecutive quarterly checks show no pluggage.

d. Flow of natural gas to the flare will be metered using a Coriolis mass flow meter.

e. The flow meters will be calibrated in accordance with manufacturers instructions and frequencies but at a minimum annually.

[45CSR13, R13-2274, 4.2.4., (774a)]

19.2.3. Once per month the permittee shall measure and record the outlet gas temperature of Scrubber E. The temperature shall be measured at the scrubbers stack testing port.
[45CSR13, R13-2274, 4.2.7., (777)]

~~**[Reserved]**~~

19.3. Testing Requirements

19.3.1. **If the outlet temperature of Scrubber E, exceeds the limit of Section 19.1.12, the permittee shall perform a stack test using an appropriate EPA approved method in order to determine compliance with Section 19.1.12. Said testing shall be performed within 60 days of the date it is determined that the outlet temperature from Scrubber E exceeded the maximum required by Section 19.1.12.**
[45CSR13, R13-2274, 4.3.1., (777)]
~~**[Reserved]**~~

19.4. Recordkeeping Requirements

19.4.1. **Record of Maintenance of Air Pollution Control Equipment. For the thermal oxidizer, flare, Scrubber E, and pencil pitch fabric filter baghouse, the permittee shall maintain accurate records of all required pollution control equipment inspection and/or preventative maintenance procedures.**
[45CSR13, R13-2274, 4.4.2., (774a, 778, 777, 771)]
~~**[Reserved]**~~

19.4.2. Record of Malfunctions of Air Pollution Control Equipment. For the thermal oxidizer, flare, Scrubber E, and pencil pitch fabric filter baghouse, the permittee shall maintain records of the occurrence and duration of any malfunction or operational shutdown of the air pollution control equipment during which excess emissions occur. For each such case, the following information shall be recorded:

a. The equipment involved.

b. Steps taken to minimize emissions during the event.

c. The duration of the event.

d. The estimated increase in emissions during the event.

For each such case associated with an equipment malfunction, the additional information shall also be recorded:

e. The cause of the malfunction.

f. Steps taken to correct the malfunction.

g. Any changes or modifications to equipment or procedures that would help prevent future recurrences of the malfunction.

[45CSR13, R13-2274, 4.4.3. (774a, 778, 777, 771)]

19.4.3. In order to determine compliance with Sections 19.1.12 and 19.2.3 the permittee shall keep records of the outlet gas temperature of Scrubber E.
[45CSR13, R13-2274, 4.4.7., (777)]

19.5 Reporting Requirements

19.5.1. [Reserved]

20.0 Source-Specific Requirements [Reserved ~~40 C.F.R. Part 63 Subpart DDDDD – National Emission Standards for Hazardous Air Pollutants for Industrial/Commercial/Institutional Boilers and Process Heaters - Applicable to this Facility]~~

20.1. Standards and Limitations

Applicability

20.1.1. ***Reserved***
~~**Koppers' Follansbee Tar Plant Boilers #2 (001-01), #3 (001-02), #5 (001-04), Tube Heaters #1 (002-01), #2 (002-02), #4 (002-03), and #31 (005-05) shall comply with all applicable requirements of 40 CFR 63 Subpart DDDDD "National Emissions Standards for Hazardous Air Pollutants for Industrial/Commercial/Institutional Boilers and Process Heaters" no later than September 13, 2007 or any revised compliance date published by the USEPA.**~~
~~**[45CSR13, R13-2274D, B.1. and B.7., 45CSR34, 40 C.F.R. §§ 63.7495 (b) and 63.7545 (b), 45CSR§30-6.5.b.2, Boilers (001-01, 001-02, and 001-04), and Tube Heaters (002-01), (002-02), (002-03), (005-05)]**~~

20.2. Monitoring Requirements

20.2.1. [Reserved]

20.3. Testing Requirements

20.3.1. [Reserved]

20.4. Testing Requirements

20.4.1. [Reserved]

20.5. Testing Requirements

20.5.1. [Reserved]

21.0. Source-Specific Requirements [Creosote Processing Unit Group 00F with Controls: Thermal Oxidizer (778) ~~#31 Tube Heater (831)~~ or ~~and~~ Flare (774a) for Tanks ~~126 and 127; No Controls for Tanks~~ 221, 222, 223, and 224; and emission point ID(s) (778~~31 and /~~ or ~~Stack~~ 774a~~, Stack 221, Stack 222, Stack 223, and Stack 224, Stack~~)]

21.1. Limitations and Standards

21.1.1. **The Creosote/Petroleum Creosote Solution Blending Tanks 221, 222, 223, and 224 must be controlled by either the Thermal Oxidizer or by Flares at all times.**
[45CSR13, R13-2274, 4.1.1.]

~~**The maximum hourly and annual benzene emissions from Tanks 126, 127, 221, 222, 223, and 224:**~~

~~Emission Source~~	~~Emission Point ID#~~	~~Benzene Emission Control Plan~~	~~Hourly Benzene Emissions (lb/hr)~~	~~Annual Benzene Emissions (lb/yr)~~
~~Tank 126 – Creosote/CBO~~	~~831/774~~	~~#31 Tube Heater/Flare~~	~~0.0002~~	~~4.2~~
~~Tank 127 – Creosote/CBO~~	~~831/774~~	~~#31 Tube Heater/Flare~~	~~0.00024~~	~~5~~
~~Tank 221 – Creosote~~	~~221~~	~~None~~	~~0.00633~~	~~5.8~~
~~Tank 222 – Creosote~~	~~222~~	~~None~~	~~0.01771~~	~~17.8~~
~~Tank 223 – Creosote~~	~~223~~	~~None~~	~~0.00433~~	~~3.3~~
~~Tank 224 – Creosote~~	~~224~~	~~None~~	~~0.01297~~	~~10.2~~

~~**Total Annual Benzene Emissions per year = 46.3 LB/hr**~~
~~**[45CSR13, R13-2274D, A.1.]**~~

40 C.F.R. Part 63 Subpart MMM National Emission Standards for Pesticide Active Ingredient Production (PAI NESHAP) - - - Koppers Operates only has Process Vents

21.1.2. *Definition of affected source.*

The affected source subject to 40 C.F.R. Part 63 Subpart MMM is the facility-wide collection of pesticide active ingredient (PAI) manufacturing process units (Follansbee Tar Plant manufactures creosote that is a PAI process units) that process, use, or produce HAP, and are located at a site is a major source (Follansbee Tar Plant is a major source), as defined in section 112(a) of the CAA. An affected source also includes waste management units, heat exchange systems, and cooling towers that are associated with the PAI process units. Exemptions from an affected source are specified in 40 C.F.R. § 63.1360 (d).

Koppers Inc. Follansbee Tar Plant has determined that the blend tanks associated with the Creosote Processing Unit are Group 2 Process Vents. The Creosote Processing Unit consist of **the following** ~~six (6)~~ creosote blend tanks (Tanks ~~126, 127,~~ 221, 222, 223, 224). Equipment associated with this process is either in heavy liquid or gas/vapor service. A process tank is defined as "a tank that is used within a process to collect material discharged from a feedstock storage vessel or equipment within the process before the material is transferred to other equipment within the process or a product storage vessel. In many process tanks, unit operations such as reactions and blending are conducted. Other process tanks, such as surge control vessels and bottom receivers, however, may not involve unit operations."

Section 21.1.2 does require compliance certification.

[45CSR34, 40 C.F.R. §§ 63.1360 (a) and 63.1361, 45CSR13, R13-2274, 4.1.25.]

21.1.3. Applicability of 40 C.F.R. Part 63 Subpart MMM except during periods of startup, shutdown, and malfunction.

(1) Each provision set forth in 40 C.F.R. Part 63 Subpart MMM shall apply at all times except that emission limitations shall not apply during periods of startup, shutdown, and malfunction, as defined in 40 C.F.R. § 63.1361, if:

(i) The startup, shutdown, or malfunction precludes the ability of the owner or operator of an affected source to comply with one or more specific emission limitations to which a particular emission point is subject; and

(ii) The owner or operator follows the provisions for periods of startup, shutdown, and malfunction, as specified in Sections 21.4.1 (2) and 21.5.4 [40 C.F.R. § 63.1367 (a) (3) and § 63.1368 (i)].

(2) The provisions set forth in 40 C.F.R. § 63.1363 shall apply at all times except during periods of nonoperation of the PAI process unit (or specific portion thereof) in which the lines are drained and depressurized resulting in the cessation of the emissions to which 40 C.F.R. § 63.1363 applies.

(3) The owner or operator shall not shut down items of equipment that are required or utilized for compliance with the emissions limitations of 40 C.F.R. Part 63 Subpart MMM during times when emissions (or, where applicable, wastewater streams or residuals) are being routed to such items of equipment, if the shutdown would contravene emissions limitations of 40 C.F.R. Part 63 Subpart MMM applicable to such items of equipment. 40 C.F.R. § 63.1360 does not apply if the item of equipment is malfunctioning, or if the owner or operator must shut down the equipment to avoid damage due to a malfunction of the PAI process unit or portion thereof.

(4) During startups, shutdowns, and malfunctions when the emissions limitations of 40 C.F.R. Part 63 Subpart MMM do not apply pursuant to Sections 21.1.3 (1) through (3) [40 C.F.R. §§ 63.1360 (e) (1) through (3)], the owner or operator shall implement, to the extent reasonably available, measures to prevent or minimize excess emissions. For purposes of 40 C.F.R. § 63.1360, "excess emissions" means emissions in excess of those that would have occurred if there were no startup, shutdown, or malfunction and the owner or operator complied with the relevant provisions of 40 C.F.R. Part 63 Subpart MMM. The measures to be taken shall be identified in the applicable startup, shutdown, and malfunction plan, and may include, but are not limited to, air pollution control technologies, work practices, pollution prevention, monitoring, and/or changes in the manner of operation of the source. Back-up control devices are not required, but may be used if available.

[45CSR34, 40 C.F.R. § 63.1360 (e), 45CSR13, R13-2274, 4.1.25.]

21.1.4. On and after the compliance dates specified in 40 C.F.R. § 63.1364, each owner or operator of an affected source subject to the provisions of 40 C.F.R. Part 63 Subpart MMM shall control HAP emissions to the levels specified in 40 C.F.R. § 63.1362 and in 40 C.F.R. § 63.1363, as summarized in Table 2 of 40 C.F.R. Part 63 Subpart MMM.
[45CSR34, 40 C.F.R. § 63.1362 (a), 45CSR13, R13-2274, 4.1.25.]

21.1.5. Process vents.

(1) Organic HAP emissions from existing sources.

The owner or operator of an existing affected source must comply with the requirements in Section 21.1.5 (1) (i) [40 C.F.R. § 63.1362 (b) (2) (i)] .

(i) The uncontrolled organic HAP emission rate shall not exceed 0.15 Mg/yr (330.4 lbs/yr) from the sum of all process vents within a process.

[45CSR34, 40 C.F.R. § 63.1362 (b) (2) (i), 45CSR13, R13-2274, 4.1.25.]

21.1.6. Opening of a safety device.

Opening of a safety device, as defined in 40 C.F.R. § 63.1361, is allowed at any time conditions require it to avoid unsafe conditions.
[45CSR34, 40 C.F.R. § 63.1362 (i), 45CSR13, R13-2274, 4.1.25.]

21.1.7. General equipment leak requirements.

(1) The provisions of 40 C.F.R. § 63.1363 applies to "equipment" as defined in 40 C.F.R. § 63.1361.

(2) Lines and equipment not containing process fluids are not subject to the provisions of 40 C.F.R. § 63.1363. Utilities, and other nonprocess lines, such as heating and cooling systems which do not combine their materials with those in the processes they serve, are not considered to be part of a process.

(3) The provisions of 40 C.F.R. § 63.1363 do not apply to bench-scale processes, regardless of whether the processes are located at the same plant site as a process subject to the provisions of 40 C.F.R. Part 63 Subpart MMM.

(4) Each piece of equipment to which 40 C.F.R. § 63.1363 applies shall be identified such that it can be distinguished readily from equipment that is not subject to 40 C.F.R. § 63.1363. Identification of the equipment does not require physical tagging of the equipment. For example, the equipment may be identified on a plant site plan, in log entries, or by designation of process boundaries by some form of weatherproof identification. If changes are made to the affected source subject to the leak detection requirements, equipment identification for each type of component shall be updated, if needed, within 15 calendar days of the end of each monitoring period for that component.

(5) Equipment that is in vacuum service is excluded from the requirements of 40 C.F.R. § 63.1363.

(6) Equipment that is in organic HAP service, but is in such service less than 300 hours per calendar year, is excluded from the requirements of 40 C.F.R. § 63.1363 if it is identified as required in of Section 21.4.4 [40 C.F.R. § 63.1363 (g)].

(7) When each leak is detected by visual, audible, or olfactory means, or by monitoring as described in Sections 18.2.1 or 18.2.2 [40 C.F.R. §§ 63.180 (b) or (c)], the following requirements apply:

(i) A weatherproof and readily visible identification, marked with the equipment identification number, shall be attached to the leaking equipment.

(ii) The identification on a valve in light liquid or gas/vapor service may be removed after it has been monitored as specified in of 40 C.F.R. § 63.1363 (e) (7) (iii), and no leak has been detected during the follow-up monitoring. If an owner or operator elects to comply with Section 18.53 (1) (i) [40 C.F.R. § 63.174 (c) (1) (i)], the identification on a connector may be removed after it has been monitored as specified in Section 18.53 (1) (i) [40 C.F.R. § 63.174 (c) (1) (i)] and no leak is detected during that monitoring.

(iii) The identification on equipment, except on a valve or connector in light liquid or gas/vapor service, may be removed after it has been repaired.

[45CSR34, 40 C.F.R. § 63.1363 (a) (1), (5) through (10), 45CSR13, R13-2274, 4.1.25.]

21.1.8. References.

The owner or operator shall comply with the provisions of 40 C.F.R. Part 63 Subpart H as specified in Section 21.1.8 (1) through (3) [40 C.F.R. § 63.1363 (b) (1) through (3)]. When the term "process unit" is used in 40 C.F.R. Part 63 Subpart H, it shall mean any group of processes for the purposes of 40 C.F.R. Part 63 Subpart MMM. Groups of processes as used in 40 C.F.R. Part 63 Subpart MMM may be any individual process or combination of processes.

(1) The owner or operator shall comply with the provisions specified in 40 C.F.R. 63.1363 (b) (1).

(2) The owner or operator shall comply with the provisions specified in 40 C.F.R. 63.1363 (b) (2).

Pressure Relief Devices in Gas/Vapor Service

40 C.F.R. § 63.165

Sampling Connection Systems

40 C.F.R. § 63.166

Pumps, Valves, Connectors, and Agitators in Heavy Liquid Service;
Instrumentation Systems; and
Pressure Relief Devices in Liquid Service

40 C.F.R. § 63.169

Open-Ended Lines

See Section 21.1.9.

(3) The owner or operator shall comply with 40 C.F.R. § 63.171, 40 C.F.R. § 63.178, and 40 C.F.R. § 63.180 with the differences specified below.

Delay of Repair

(i) Sections 40 C.F.R. § 63.171, Delay of repair, shall apply except Section 18.1.40 [40 C.F.R. § 63.171 (a)] shall not apply. Delay of repair of equipment for which leaks have been detected is allowed if one of the following conditions exist:

(A) The repair is technically infeasible without a process shutdown. Repair of this equipment shall occur by the end of the next scheduled process shutdown.

(B) The owner or operator determines that repair personnel would be exposed to an immediate danger if attempting to repair without a process shutdown. Repair of this equipment shall occur by the end of the next scheduled process shutdown.

[45CSR34, 40 C.F.R. § 63.1363 (b), 45CSR13, R13-2274, 4.1.25.]

21.1.9. **Standards: open-ended valves or lines**.

(1) (i) Each open-ended valve or line shall be equipped with a cap, blind flange, plug, or a second valve, except as provided in 40 C.F.R. § 63.177 and of Sections 21.1.9 (4) through (6) [40 C.F.R.§ 63.1363 (d) (4) through (6)].

(ii) The cap, blind flange, plug, or second valve shall seal the open end at all times except during operations requiring process fluid flow through the open-ended valve or line, or during maintenance or repair. The cap, blind flange, plug, or second valve shall be in place within 1 hour of cessation of operations requiring process fluid flow through the open-ended valve or line, or within 1 hour of cessation of maintenance or repair.

(2) Each open-ended valve or line equipped with a second valve shall be operated in a manner such that the valve on the process fluid end is closed before the second valve is closed.

(3) When a double block and bleed system is being used, the bleed valve or line may remain open during operations that require venting the line between the block valves but shall comply with Section 21.1.9 (1) [40 C.F.R.§ 63.1363 (d) (1)] at all other times.

(4) Open-ended valves or lines in an emergency shutdown system which are designed to open automatically in the event of a process upset are exempt from the requirements of Sections 21.1.9 (1) through (3) [40 C.F.R.§ 63.1363 (d) (1) through (3)].

(5) Open-ended valves or lines containing materials which would autocatalytically polymerize are exempt from the requirements of Sections 21.1.9 (1) through (3) [40 C.F.R.§ 63.1363 (d) (1) through (3)].

(6) Open-ended valves or lines containing materials which could cause an explosion, serious overpressure, or other safety hazard if capped or equipped with a double block and bleed system as specified in Sections 21.1.9 (1) through (3) [40 C.F.R.§ 63.1363 (d) (1) through (3)] are exempt from the requirements of Sections 21.1.9 (1) through (3) [40 C.F.R. § 63.1363 (d) (1) through (3)].

[45CSR34, 40 C.F.R. § 63.1363 (d), 45CSR13, R13-2274, 4.1.25.]

21.1.10. No person shall cause, suffer, allow or permit visible emissions from any storage structure(s) associated with any manufacturing process(es) that pursuant to Section 3.1.20 [45CSR§7-5.1.] is required to have a full enclosure and be equipped with a particulate matter control device. [45CSR§7-3.7., Group 00F]

21.2. Monitoring Requirements

21.2.1. Monitoring for uncontrolled emission rates.

The owner or operator shall demonstrate continuous compliance with the emission limit in Section 21.1.5 (1) (i) [40 C.F.R § 63.1362 (b) (2) (i)] by calculating daily a 365-day rolling summation of uncontrolled emissions based on the uncontrolled emissions per emission episode, as calculated using the procedures in Section 21.3.1 (2) [40 C.F.R § 63.1365 (c) (2)], and records of the number of batches produced. Each day that the summation for a process exceeds 0.15 Mg/yr is considered a violation of the emission limit. **[45CSR34, 40 C.F.R. § 63.1366 (c), 45CSR13, R13-2274, 4.1.25.**]

21.2.2. Monitoring for equipment leaks.

The standard for equipment leaks is based on monitoring. All monitoring requirements for equipment leaks are specified in 40 C.F.R. § 63.1363.

[45CSR34, 40 C.F.R. § 63.1366 (d), 45CSR13, R13-2274, 4.1.25.]

21.3. Testing Requirements

21.3.1. Initial compliance with process vent provisions.

The owner or operator of an affected source shall demonstrate compliance with the process vent standards in 40 C.F.R. § 63.1362 (b) using the procedures described in 40 C.F.R. § 63.1365 (c) (1) and Section 21.3.1 (2) [40 C.F.R. § 63.1365 (c) (2)].

(1) Compliance with the process vent standards in 40 C.F.R. § 63.1362 (b) shall be demonstrated in accordance with the provisions specified in 40 C.F.R. § 63.1365 (c) (1) (i) through (viii).

(i) Initial compliance with the emission limit cutoffs in Section 21.1.5 (2) (i) [40 C.F.R. § 63.1362 (b) (2) (i)] and 40 C.F.R. § 63.1362 (b) (4) (i) is demonstrated when the uncontrolled organic HAP emissions from the sum of all process vents within a process are less than or equal to 0.15 Mg/yr (330.4 lbs/yr). Uncontrolled HAP emissions shall be determined using the procedures described in 40 C.F.R. § 63.1362 (c) (2).

(2) Uncontrolled emissions.

(ii) Engineering assessments.

Koppers in their Pre-Compliance Plan requested to calculate uncontrolled HAP emissions from the blend tanks using methodology in AP-42, Section 7.1, Organic Liquid Storage Tanks, 9/97. This request was submitted in December 2001.

Each day that the summation for a process exceeds 0.15 Mg/yr (330.4 lbs/yr) is considered a violation of the emission limit.

[45CSR34, 40 C.F.R. § 63.1365 (c), 45CSR13, R13-2274, 4.1.25.]

21.4. Recordkeeping Requirements

21.4.1. Requirements of 40 C.F.R. Part 63 Subpart A.

The owner or operator of an affected source shall comply with the recordkeeping requirements in 40 C.F.R. Part 63 Subpart A as specified in Table 1 of 40 C.F.R. Part 63 Subpart MMM and in Section 21.4.1 (1) and (2) [40 C.F.R. §§ 63.1367 (a) (1) and (3)].

(1) Data retention.

Each owner or operator of an affected source shall keep copies of all records and reports required by 40 C.F.R. Part 63 Subpart MMM for at least 5 years, as specified in 40 C.F.R. § 63.10 (b) (1).

(2) Startup, shutdown, and malfunction plan.

The owner or operator of an affected source shall develop and implement a written startup, shutdown, and malfunction plan as specified in 40 C.F.R. § 63.6 (e) (3). This plan shall describe, in detail, procedures for operating and maintaining the affected source during periods of startup, shutdown, and malfunction and a program for corrective action for a malfunctioning process, air pollution control, and monitoring equipment used to comply with 40 C.F.R. Part 63 Subpart MMM. The owner or operator of an affected source shall keep the current and superseded versions of this plan onsite, as specified in 40 C.F.R. § 63.6 (e) (3) (v). The owner or operator shall keep the startup, shutdown, and malfunction records specified in Sections 21.4.1 (2) (i) through (iii) [40 C.F.R. §§ 63.1367 (a) (3) (i) through (iii)]. Reports related to the plan shall be submitted as specified in 40 C.F.R. § 63.1368 (i).

(i) The owner or operator shall record the occurrence and duration of each malfunction of the process operations or of air pollution control equipment used to comply with 40 C.F.R. Part 63 Subpart MMM, as specified in 40 C.F.R. § 63.6 (e) (3) (iii).

(ii) The owner or operator shall record the occurrence and duration of each malfunction of continuous monitoring systems used to comply with 40 C.F.R. Part 63 Subpart MMM.

(iii) For each startup, shutdown, or malfunction, the owner or operator shall record all information necessary to demonstrate that the procedures specified in the affected source's startup, shutdown, and malfunction plan were followed, as specified in 40 C.F.R. § 63.6 (e) (3) (iii); alternatively, the owner or operator shall record any actions taken that are not consistent with the plan, as specified in 40 C.F.R. § 63.6 (e) (3) (iv).

[45CSR34, 40 C.F.R. § 63.1367 (a) (1) and (3), 45CSR13, R13-2274, 4.1.25.]

21.4.2. Records of equipment operation.

(1) For processes in compliance with the 0.15 Mg/yr emission limit of Sections 21.1.5 (1) (i) [40 C.F.R. §§ 63.1362 (b) (2) (i)], daily records of the rolling annual calculations of uncontrolled emissions.

(2) The owner or operator of an affected source that complies with the standards for process vents, storage tanks, and wastewater systems shall maintain up-to-date, readily accessible records of the information specified in 40 C.F.R. § 63.1.367 (b) (6) (i) through (vii) to document that HAP emissions or HAP loadings (for wastewater) are below the limits specified in 40 C.F.R. § 63.1362:

(i) The initial calculations of uncontrolled and controlled emissions of gaseous organic HAP per batch for each process.

(iii) The number of batches per year for each batch process (Tank Throughput).

[45CSR34, 40 C.F.R. § 63.1367 (b) (4) and (6) (i) and (iii), 45CSR13, R13-2274, 4.1.25.]

21.4.3. Records of equipment leak detection and repair.

The owner or operator of an affected source subject to the equipment leak standards in 40 C.F.R. § 63.1363 shall implement the recordkeeping requirements specified in 40 C.F.R. § 63.1363 (g). All records shall be retained for a period of 5 years, in accordance with the requirements of 40 C.F.R. § 63.10 (b) (1).
[45CSR34, 40 C.F.R. § 63.1367 (c), 45CSR13, R13-2274, 4.1.25.]

21.4.4. Recordkeeping requirements for leak equipment.

(1) General recordkeeping.

The following information pertaining to all equipment subject to the requirements in 40 C.F.R. § 63.1363 shall be recorded:

(i) (A) A list of identification numbers for equipment (except instrumentation systems) subject to the requirements of 40 C.F.R. § 63.1363. Connectors, except those subject to 40 C.F.R. §§ 63.1363 (f), need not be individually identified if all connectors in a designated area or length of pipe subject to the provisions of 40 C.F.R. § 63.1363 are identified as a group, and the number of subject connectors is indicated. The list for each type of equipment shall be completed no later than the completion of the initial survey required for that component. The list of identification numbers shall be updated, if needed, to incorporate equipment changes within 15 calendar days of the completion of each monitoring survey for the type of equipment component monitored.

(iii) (A) A list of identification numbers for pressure relief devices subject to the provisions in Section 18.1.15 [40 C.F.R. § 63.165 (a)].

(B) A list of identification numbers for pressure relief devices equipped with rupture disks, under the provisions of Section 18.1.18 [40 C.F.R. § 63.165 (d)].

(iv) Identification of instrumentation systems subject to the provisions of 40 C.F.R. § 63.1363. Individual components in an instrumentation system need not be identified.

(vi) A list of equipment designated as unsafe-to-monitor or difficult-to-monitor under 40 C.F.R. § 63.1363 (f) and a copy of the plan for monitoring this equipment.

(2) Monitoring records.

When each leak is detected as specified in 40 C.F.R. § 63.1363 (c) and (e) and, 40 C.F.R. § 63.164, 40 C.F.R. §§ 63.169 and 63.174, and 40 C.F.R. § 63.172, the owner or operator shall record the information specified in Sections 21.4.4 (2) (i) through (vi) and (ix) [40 C.F.R. §§ 63.1363 (g) (4) (i) through (vi) and (ix)]. All records shall be retained for 5 years, in accordance with the requirements of 40 C.F.R. § 63.10 (b) (1).

(i) The instrument and the equipment identification number and the operator name, initials, or identification number.

(ii) The date the leak was detected and the date of first attempt to repair the leak.

(iii) The date of successful repair of the leak.

(iv) If postrepair monitoring is required, maximum instrument reading measured by Method 21 of 40 C.F.R. Part 60, Appendix A, after it is successfully repaired or determined to be nonrepairable.

(v) "Repair delayed" and the reason for the delay if a leak is not repaired within 15 calendar days after discovery of the leak.

(A) The owner or operator may develop a written procedure that identifies the conditions that justify a delay of repair. The written procedures may be included as part of the startup/shutdown/malfunction plan, required by 40 C.F.R. § 63.1367 (a), for the source or may be part of a separate document that is maintained at the plant site. Reasons for delay of repair may be documented by citing the relevant sections of the written procedure.

(B) If delay of repair was caused by depletion of stocked parts, there must be documentation that the spare parts were sufficiently stocked onsite before depletion and the reason for depletion.

(vi) If repairs were delayed, dates of process shutdowns that occur while the equipment is unrepaired.

(ix) Copies of the periodic reports as specified in Section 21.5.6 (1) [40 C.F.R. § 63.1363 (h) (3)], if records are not maintained on a computerized database capable of generating summary reports from the records.

(3) Records for components in heavy liquid service.

Information, data, and analysis used to determine that a piece of equipment or process is in heavy liquid service shall be recorded. Such a determination shall include an analysis or demonstration that the process fluids do not meet the criteria of "in light liquid or gas/vapor service." Examples of information that could document this include, but are not limited to, records of chemicals purchased for the process, analyses of process stream composition, engineering calculations, or process knowledge.

(4) Records of exempt components.

Identification, either by list, location (area or group), or other method of equipment in organic HAP service less than 300 hr/yr subject to the provisions of 40 C.F.R. § 63.1363.

[45CSR34, 40 C.F.R. § 63.1363 (g) (2) (i) (A), (iii), (iv), (vi); (4) (i) through (vi) and (ix); (8) and (9), 45CSR13, R13-2274, 4.1.25.]

21.5. Reporting Requirements

21.5.1. The owner or operator of an affected source shall comply with the reporting requirements of Sections 21.5.2 through 21.5.5 [40 C.F.R. § 63.1368 (g) through (j)] and 40 C.F.R. §§ 63.1368 (b) through (f). The owner or operator shall also comply with applicable paragraphs of 40 C.F.R. §§ 63.9 and 63.10, as specified in Table 1 of 40 C.F.R. Part 63 Subpart MMM.
[45CSR34, 40 C.F.R. § 63.1368 (a), 45CSR13, R13-2274, 4.1.25.]

21.5.2. Periodic reports.

The owner or operator shall prepare Periodic reports in accordance with 40 C.F.R. §§ 63.1368 (g) (1) and (2) and submit them to the Administrator.

Content of periodic report.

The owner or operator shall include the information in 40 C.F.R. §§ 63.1368 (g) (2) (i) through (xii), as applicable.

(1) Each Periodic report must include the information in 40 C.F.R. § 63.10 (e) (3) (vi) (A) through (M), as applicable.

(2) The information in Sections 21.5.2 (2) (A) through (D) [40 C.F.R. §§ 63.1368 (g) (2) (iv) (A) through (D)] shall be stated in the Periodic report, when applicable.

(A) No excess emissions.

(B) No exceedances of a parameter.

(C) No excursions.

(D) No continuous monitoring system has been inoperative, out of control, repaired, or adjusted.

[45CSR34, 40 C.F.R. § 63.1368 (g) (2) (i) and (iv), 45CSR13, R13-2274, 4.1.25.]

21.5.3. Notification of process change.

(1) Except as specified in Section 21.5.3 (2) [40 C.F.R. § 63.1368 (h) (2)], whenever a process change is made, or any of the information submitted in the Notification of Compliance Status report changes, the owner or operator shall submit the information specified in Sections 21.5.3 (1) (i) through (iv) [40 C.F.R. § 63.1368 (h) (1) (i) through (iv)] with the next Periodic report required under 40 C.F.R. § 63.1368 (g). For the purposes of Section 21.5.3 [40 C.F.R. § 63.1368 (h)], a process change means the startup of a new process, as defined in 40 C.F.R. § 63.1361.

(i) A brief description of the process change;

(ii) A description of any modifications to standard procedures or quality assurance procedures;

(iii) Revisions to any of the information reported in the original Notification of Compliance Status report under 40 C.F.R. § 63.1368 (f); and

(iv) Information required by the Notification of Compliance Status report under 40 C.F.R. § 63.1368 (f) for changes involving the addition of processes or equipment.

(2) The owner or operator must submit a report 60 days before the scheduled implementation date of either of the following:

(i) Any change in the activity covered by the Precompliance report.

(ii) A change in the status of a control device from small to large.

[45CSR34, 40 C.F.R. § 63.1368 (h), 45CSR13, R13-2274, 4.1.25.]

21.5.4. Reports of startup, shutdown, and malfunction.

For the purposes of 40 C.F.R. Part 63 Subpart MMM, the startup, shutdown, and malfunction reports shall be submitted on the same schedule as the Periodic reports required under 40 C.F.R. § 63.1367 (g) instead of the schedule specified in 40 C.F.R. § 63.10 (d) (5) (i). These reports shall include the information specified in Sections 21.4.1 (2) (i) through (iii) [40 C.F.R. §§ 63.1367 (a) (3) (i) through (iii)] and shall contain the name, title, and signature of the owner or operator or other responsible official who is certifying its accuracy. Reports are only required if a startup, shutdown, or malfunction occurred during the reporting period. Any time an owner or operator takes an action that is not consistent with the procedures specified in the affected source's startup, shutdown, and malfunction plan, the owner or operator shall submit an immediate startup, shutdown, and malfunction report as specified in 40 C.F.R. § 63.10 (d) (5) (ii).
[45CSR34, 40 C.F.R. § 63.1368 (i), 45CSR13, R13-2274, 4.1.25.]

21.5.5. Reports of equipment leaks.

The owner or operator of an affected source subject to the standards in 40 C.F.R. § 63.1363, shall implement the reporting requirements specified in 40 C.F.R. § 63.1363 (h). Copies of all reports shall be retained as records for a period of 5 years, in accordance with the requirements of 40 C.F.R. § 63.10 (b) (1).
[45CSR34, 40 C.F.R. § 63.1368 (j), 45CSR13, R13-2274, 4.1.25.]

21.5.6. Reporting Requirements for Equipment Leaks.

(1) Periodic reports.

The owner or operator of a source subject to 40 C.F.R. § 63.1363 shall submit Periodic reports.

(i) A report containing the information in Sections 21.5.6 (1) (ii) and (iv) [40 C.F.R. § 63.1363 (h) (3) (ii) and (iv)] shall be submitted semiannually. The first Periodic report shall be submitted no later than 240 days after the date the Notification of Compliance Status report is due and shall cover the 6-month period beginning on the date the Notification of Compliance Status report is due. Each subsequent Periodic report shall cover the 6-month period following the preceding period.

(ii) For equipment complying with the provisions of 40 C.F.R. §§ 63.1363 (b), (c), (d), (e), (f), and (g) and the Periodic report shall contain the summary information listed in Sections 21.5.6 (1) (ii) (I) through (L) [40 C.F.R. § 63.1363 (h) (3) (ii) (I) through (L)] for each monitoring period during the 6-month period.

(I) The facts that explain any delay of repairs and, where appropriate, why a process shutdown was technically infeasible.

(J) The results of all monitoring to show compliance with 40 C.F.R. § 63.164 (i) and 18.1.15 [40 C.F.R. § 63.165 (a)] and 40 C.F.R. § 63.172 (f) conducted within the semiannual reporting period.

(K) If applicable, the initiation of a monthly monitoring program under either 40 C.F.R. § 63.1363 (c) (4) (ii) or 40 C.F.R. § 63.136 (e) (4) (i) (A).

(L) If applicable, notification of a change in connector monitoring alternatives as described in Section 18.1.53 (1) [40 C.F.R. § 63.174 (c) (1)].

(iv) Any change in the information submitted under 40 C.F.R. § 63.1363 (h) (2) shall be provided in the next Periodic report.

[45CSR34, 40 C.F.R. § 63.1363 (h) (3) (i), (ii), and (iv), 45CSR13, R13-2274, 4.1.25.]

Appendix A

Koppers Inc.
Follansbee Tar Plant (KI)
45CSR2 and 45CSR10
Monitoring Plan
Section 3.4.16.
Facility ID# 009-00001

Alternate Fuel Sampling Plan
Koppers Industries, Inc.
Follansbee Tar and Chemical Plant
Follansbee, West Virginia

September 2002

Prepared by:

Heath C. Huschak
SHE Coordinator

CONTENTS

Page

INTRODUCTION 1
SOURCE DESCRIPTION 1
MONITORING PLAN 2
CONCLUSIONS 3

FIGURES

1. Material Flow Diagram Depicting Feedstock Usage, Production, Recycling and Waste Generation in the Manufacturing Process
2. Process Flow Diagram-Tar Distillation Columns, Multiple Pass Process
3. Debenzolizer Column
4. Process Flow Diagram-Naphthalene Distillation Unit, Multiple Pass Process

APPENDICES

A. Fuel Usage Data Sheet
B. Summary of Alternative Fuel Sampling

ALTERNATE FUEL SAMPLING PLAN
KOPPERS INDUSTRIES, INC.
FOLLANSBEE TAR PLANT
FOLLANSBEE, WEST VIRGINIA

INTRODUCTION

This Alternate Fuel Sampling Plan was prepared by Air/Compliance Consultants, Inc. (ACCI) and Koppers Industries, Inc. for the Follansbee Tar Plant (KII) located in Follansbee, West Virginia. KII and ACCI developed this plan to meet the monitoring, recordkeeping and reporting requirements of 45 CSR 2, 45 CSR 10, and the final revised guidance and clarification document, *Policy on Regulations 2 and 10 Record Keeping and Reporting Requirements* (Policy), provided by the Office of Air Quality (rev. 7/6/98).

SOURCE DESCRIPTION

The KII Follansbee plant processes Crude Coke Oven Tar (CCOT) and Refined Chemical Oil (RCO) into a variety of products including refined Tar, Creosote, naphthalene and pitch. Figure 1 shows a material flow diagram for the facility that depicts the flow of products, wastes co-products and recycled materials. CCOT is made in either the #2/ #4 multiple pass continuous distillation unit or the #1 unit single pass unit which operates as a batch process. The light fraction coming off this process is RCO. Additional RCO is also shipped in from other facilities. Figure 2 shows a flow diagram for the multiple pass tar distillation process. RCO is fed into a debenzolizer column that strips the benzene from the raw feed. The concentrated benzene product is transferred to storage in Tank 11 for eventual use as fuel for the boiler. Figure 3 depicts the debenzolizer column.

RCO from the tar columns and purchased RCO are fed into the bottom of a continuous acid washing column and combined with caustic to wash the tar acids. This acid free oil then passes through another double pass distillation column (#31 and #32 columns) to produce naphthalene. Debenzolized solvent and NSR are the co-products from this process which are sometimes

recycled for use as fuel in the boiler house. Figure 4 contains a flow diagram of the naphthalene distillation unit.

Steam is used throughout the plant to heat tanks, process materials and distill products. The main boiler house has 3 boilers (No. 2, No. 3 and No. 5) which provide steam to the balance of the plant. Boiler #2 is a B&W boiler rated at 50 Million British Thermal Units per hour (MMBtu/hr) and is fueled primarily by excess process oils. It also has the capability of burning #6 fuel oil as a backup fuel. Boiler #3 is a Zurn boiler (MFR# 101178) rated at 75 MMBtu/hr, and is fueled primarily on natural gas. Boiler #3 has the capability of burning excess process oils or #6 diesel oil as a backup fuels. Boiler #5 is not subject to this plan requirements being it only has the capacity to burn natural gas.

The three process oils which are fired in the boilers each fit the definition of an alternative fuel under the applicable regulations. The process oils fired at the plant are products known as Naphthalene Still Residue (NSR), Debenzolized Solvent, and the concentrated benzene product coming off the debenzolizer column.

MONITORING PLAN

KII will maintain records of the quantity and type of fuel burned in Boilers 2 and 3 as required by these regulations. KII will track this information on a daily basis at the boiler house. The information will be maintained onsite for a minimum of five years and made available to the WVDEP OAQ upon request. Appendix A contains a sample boiler house fuel usage data sheet.

The alternative fuels are products from continuous processes at the Follansbee Plant and therefore, fuel analysis cannot be performed on a "per shipment" basis. Previous KII analysis, however, has shown these products are of a very consistent quality. KII will, therefore, analyze each of the alternative fuels at least once per quarter for the following constituents:

- ash (weight %)
- moisture (weight %)

C:\My Documents\all fuel plan.doc

- total sulfur (weight %)
- higher heating value (BTU/ gallon)

Appendix B contains most recent analysis performed for the process fuels.

Upon acceptance of this plan, KII will perform this analysis each calendar quarter by a certified independent laboratory. The analysis reports will be maintained on site for a minimum of five years. Upon request by the WVDEP OAQ, these records will be made available for inspection.

CONCLUSIONS

KII has developed a monitoring plan based on the alternative fuel requirements of 45 CSR 2 and 45 CSR 10. Boilers 2 and 3 may potentially burn NSR, debenzolized solvent and a concentrated benzene product off of the debenzolizer column. All three of these products meet the definition of an alternative fuel. This plan contains the monitoring and recordkeeping procedures that will be followed by the facility in fulfillment of the regulatory requirements.

C:\My Documents\alt fuel plan.doc

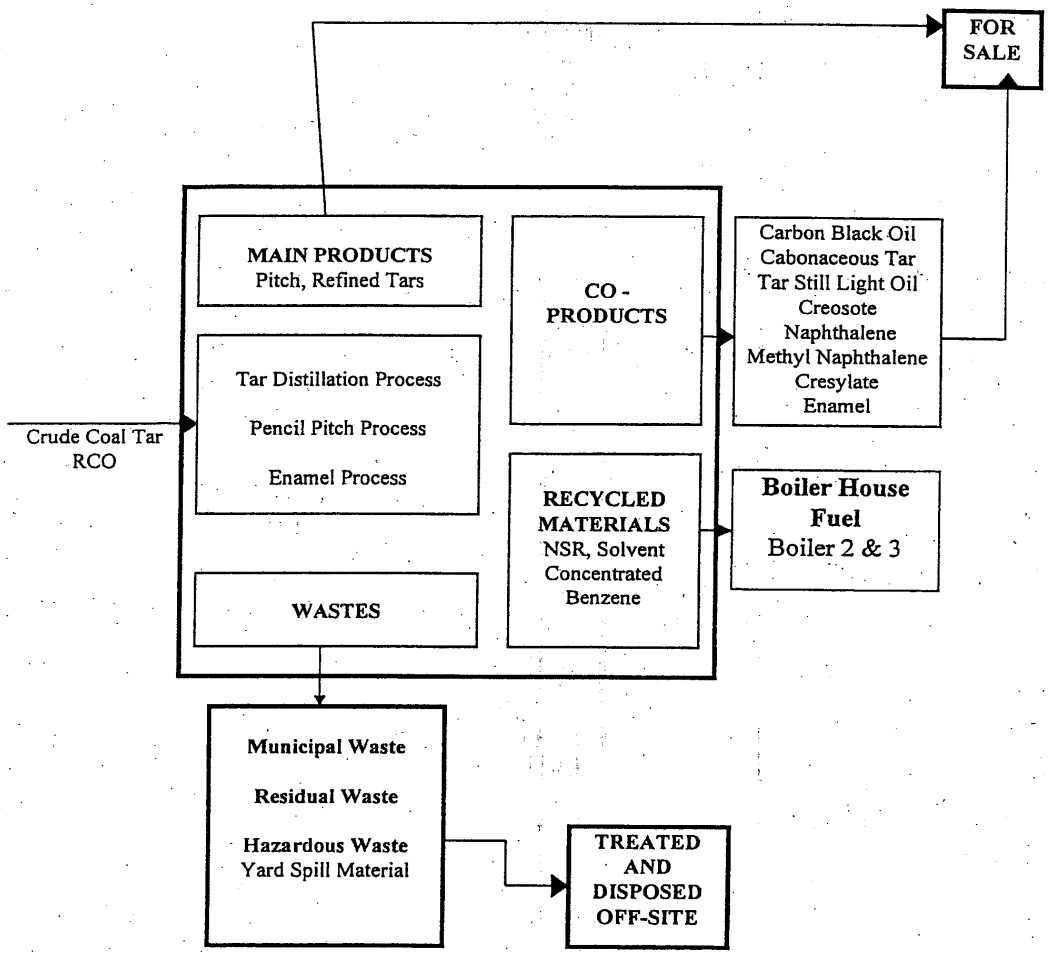

Air/Compliance Consultants, Inc.

Material Flow Diagram Depicting Feedstock Usage, Production, Recycling and Waste Generation in the Manufacturing Process	Figure 1

\\Server1\Data\APROJECT\KOPPERS\KII_FOLL\99-030 FB Compliance Programs\99-030f Alt_fuel\MATFLOW.doc

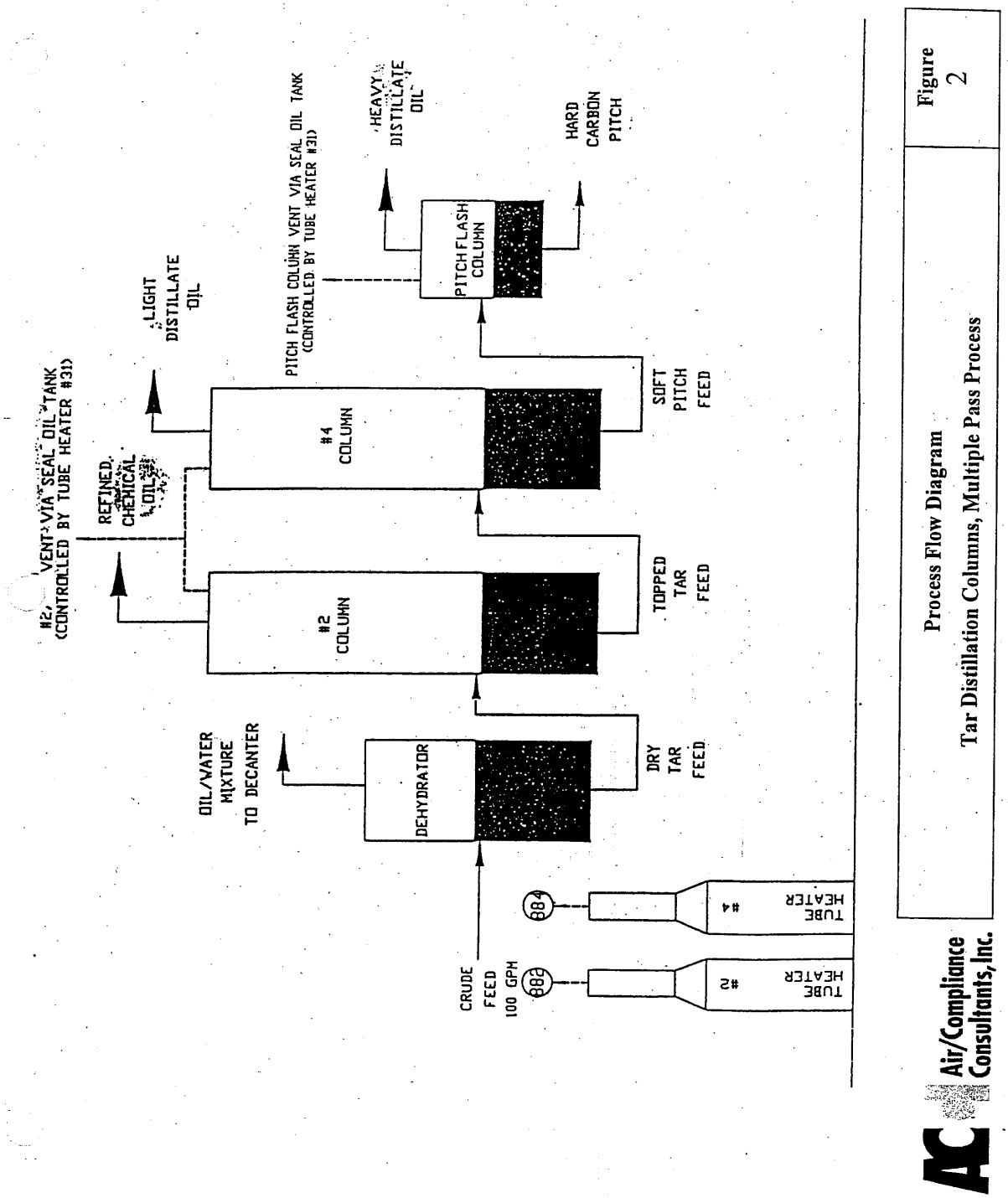

Figure 2

Process Flow Diagram
Tar Distillation Columns, Multiple Pass Process

Air/Compliance Consultants, Inc.

FIGURE 3

Debenzolizer Column

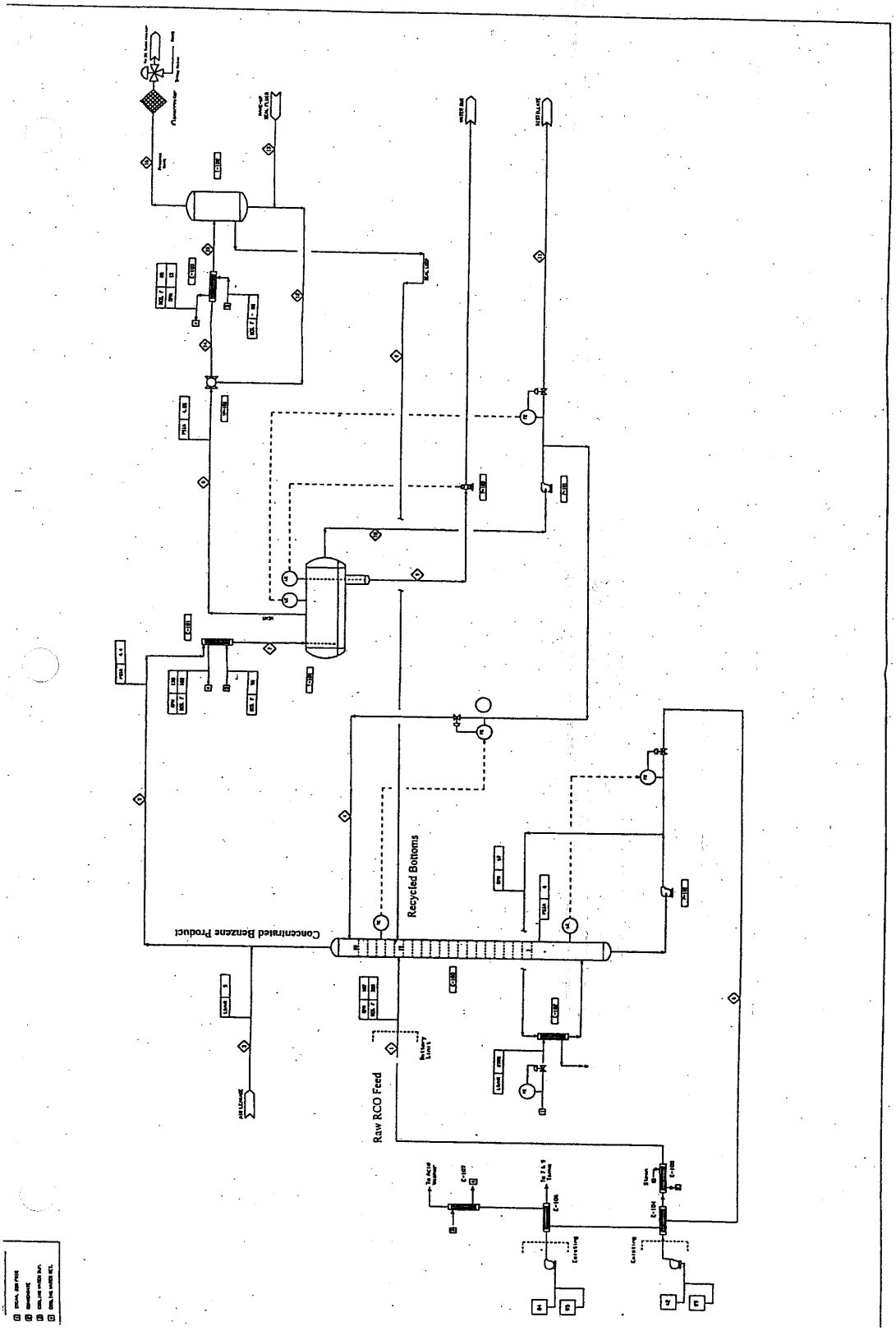
Concentrated Benzene Product
Recycled Bottoms
Raw RCO Feed

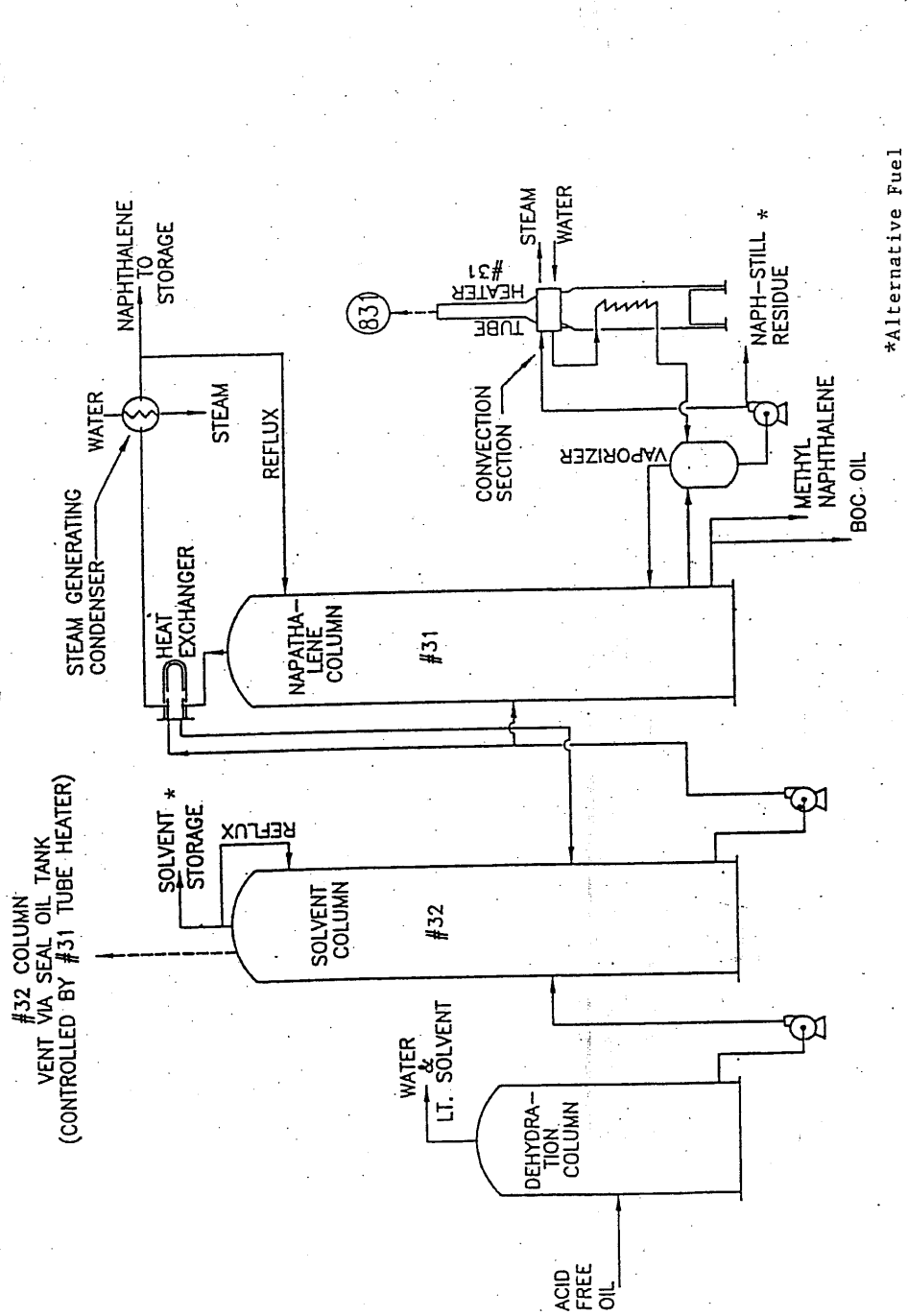

Figure 4

Process Flow Diagram

Naphthalene Distillation Unit, Multiple Pass Process

Air/Compliance Consultants, Inc.

APPENDIX A

Fuel Usage Data Sheet

FILTERED WATER	H	M	P	D	S	SLUDGE PERCENT	SOFTENERS HARDNESS	
TIME						5 ML=1%	1	2
LAST								
12A								
4A								
8A								
12P								
4P								
8P								
RANGE	4 - 8	62 - 70	35 - 40	5 - 15	40 - 70	1% - 4%	< 1.0	< 1.0

	BOILER WATER SULFITE			CHEM MIX SETTINGS		SLUDGE DOWN SETTINGS		
				COUNTER	TIMER	COUNTER	TIMER	
TIME	2	3	5					TUR
LAST								LAS
12A								11 X
4A								
8A								7 X
12P								
4P								3 X
8P								
RANGE	25-35	25-35	25-35	—	—	—	—	RAN

BOILER #	HRS ON	GAS		OIL	
		READING		READING	
		START	STOP	START	STOP
2					
3					
5					

CHEMICALS USED

CHEMICAL	USE	11/7	7/3	3/11	T
7346 BROMINE	B-TOWER 35#/WK				
7330 ALGECIDE	B-TOWER 3 GAL/WK				
7308 OIL DISPERSANT	B-TOWER 1/2 PT/WK				
NALCO 464	BRINE				
SALT	BRINE				
LIME	CHEMICAL MIX				
SODA ASH	CHEMICAL MIX				
KOPPERS 504	CHEMICAL MIX				
NALCO 7157	REACTION TK FLOCCULENT				
NALCO 354	NEUTRALIZING AMINE STEAM HEADER				
NALCO 1720 SULFITE	OXYGEN SCAVENGER FEEDWATER				

1. MAKE SURE STARTUP & SHUTDOWN TIMES ARE RECORDED.
2. EQUIPMENT CLEARED & LOCKED OUT FOR MAINTENANCE.
3. SAFETY CHECKS MADE.
4. WORK AREAS CLEAN & SAFE.
5. FOLLOW ALL SAFETY RULES.
6. BLOWDOWN ONLINE BOILERS FULLY ONCE EACH SHIFT

APPENDIX B

Summary of Alternative Fuel Sampling

KOPPERS INDUSTRIES, INC.

Technology Department
Analysis Report

Sample No:	2002-1157,1158,1159	Date Received:	8/14/02
Received From:	Koppers- Follansbee Heath Huschak		
Quantity:	1 quart		
Description:	02-1157 LB Unwasher Solvent 02-1158 Naphthalene Still Residue 02-1159 #11 Tank contents - Boiler Feed Tank		
Analysis Date:	8/21/02		

Analytical Laboratory Report
for
Koppers Industries, Inc

Fuel Oil Specifications D396

Property	ASTM Test Method b	No 1	No 2	No 4 Light	No 4	No 5 Light	No 5 Heavy	No 6	Analytical Results 14424 Coal Tar Distillate 02-1157	14425 Coal Tar Distillate 02-1158	14426 Coal Tar Distillate 02-1159
		Detailed Requirements for Fuel Oils a									
Flash Point, °C, min	D93	38	38	38	55	55	55	60	50	122	20
Water and Sediment, % vol, max	D1796	0.05	0.05	(0.50) c	(0.50) c	(1.00) c	(1.00) c	(2.00) c	<0.01	0.15	2.5
Distillation temperature, °C	D86										
10% vol recovered, max		215							336	484	208
90% vol recovered, min			282						362	Too high for D86	376
max		288	338								
Kinematic Viscosity @ 40°C, mm2/s	D445								1.182	4.393	0.993
min		1.3	1.9	1.9	>5.5						
max		2.1	3.4	5.5	24.0 d						
Kinematic Viscosity @ 100°C, mm2/s	D445										
min						5.0	9.0	15			
max						8.9 d	14.9 d	50.0 d			
Ramsbottom carbon residue on 10%	D524	0.15	0.35						1.32	too thick	4.44
distillation residue % mass, max											100% sample
Ash, % mass max	D482			0.05	0.10	0.15	0.15				
Sulfur, % mass, max e	D129	0.50	0.50						0.05	0.54	0.18
Copper strip corrosion rating, max,	D130	No 3	No 3						1B	1A	1A
3h at 50°C											
Density @ 15°C, kg/m3	D1298								971.32	1070.5	956.2
min				>876 f							
max		850	876								
Pour Point °C, max g		-18	-6	-6	-6			h	<-24	+3	<-24
Heat of Combustion, BTU/lb	D240								16911	17772	11475

a It is the intent of these classifications that failure to meet any requirement of a given grade does not automatically place an oil in the next lower grade unless in fact it meets all requirements of the lower grade. However, to meet special operating conditions modifications of individual limiting requirements may be agreed upon among the purchaser, seller, and manufacturer.
b The test methods indicated are the approved referee methods. Other acceptable methods are indicated in Section 2 and 5.1 of ASTM D396
c The amount of water distilled by Test Method D95 plus the sediment by extraction by Test Method D473 shall not exceed the value shown in the table. For Grade No 6 fuel oil, the amount of sediment by extraction shall not exceed 0.50 mass %, and a deduction in quality shall be made for all water and sediment in excess of 1.0 mass %.
d Where low sulfur fuel oil is required, fuel oil falling in the viscosity range of a lower number grade down to and including No 4 can be supplied by agreement between the purchaser and supplier. The viscosity range of the initial shipment shall be identified and advance notice shall be required when changing from one viscosity range to another. This notice shall be in sufficient time to permit the user to make necessary adjustments.
e Other sulfur limits may apply in selected areas in the United State and in other countries.
f This limit assures a minimum heating value and also prevents misrepresentation of this product as Grade No 2.
g Lower or higher pour points can be specified whenever required by conditions of storage or use. When a pour point then than -18°C is specified, the minimum viscosity at 40°C for Grade No 2 shall be 1.7 mm2/s and the minimum 90% recovered temperature shall be waived.
h Where low sulfur fuel oil is required, Grade No 6 fuel oil will be classified as Low Pour (+15°C max) or High Pour (no max). Low Pour fuel oil should be used unless tanks and lines are heated.

Analytical Testing Services, Inc.
PO Box 61
Franklin, PA 16323-0061

www.WeTestIT.com

Samples retained for thirty (30) days.

9/12/2002