June 30, 2016

Mr. William F. Durham
Director
WVDEP, Division of Air Quality
601 – 57th Street SE
Charleston, West Virginia 25304

Re: Columbia Gas Transmission, Title V Renewal Application, R30-03900101-2012

Dear Mr. Durham,

Columbia Pipeline Group (CPG) and SLR International Corporation have prepared the attached 45CSR30 Title V Renewal Application for the Hunt Compressor Station located in Kanawha County, West Virginia (Facility ID 039-00101). The facility is currently operating under Title V operating permit number R30-03900101-2012.

In preparation for this renewal the existing terms and conditions of the Title V permit were reviewed and evaluated. As a result of this evaluation, a newly proposed Title V permit was developed to move away from the old natural gas General Permit format in an effort to enhance compliance clarity. These suggested changes to permit content and format have been compiled within a proposed permit document being submitted for consideration within this application. The proposed permit has also been supplied in Microsoft Word format within the electronic submittal in hopes of being a useful tool for the reviewing Engineer's convenience.

SLR would be more than happy to discuss the details of the proposed predraft or the Title V Renewal Application at your convenience. If any additional information is needed, please feel free to contact me by telephone at (304) 545-8563 or by e-mail at jhanshaw@slrconsulting.com

Sincerely,
SLR International Corporation

Jesse Hanshaw
Principal Engineer

Cc: Ms. Kelly Taylor, CPG Environmental Manager

global environmental solutions

Columbia Gas Transmission, LLC

Hunt Compressor Station

Facility ID No. 039-00101

Elkview, West Virginia

Title V Operating Permit Renewal Application

SLR Ref: 116.01272.00021

June 2016

Columbia Pipeline Group

Title V Operating Permit Renewal Application

Prepared for:

Columbia Gas Transmission, LLC
1700 MacCorkle Avenue, SE
Charleston, West Virginia 25314

This document has been prepared by SLR International Corporation. The material and data in this permit application were prepared under the supervision and direction of the undersigned.

Chris Boggess
Associate Engineer

Jesse Hanshaw, P.E.
Principal Engineer

CONTENTS

ATTACHMENTS

APPLICATION FOR PERMIT
ATTACHMENT A ..... AREA MAP
ATTACHMENT B ..... PLOT PLAN
ATTACHMENT C ..... PROCESS FLOW DIAGRAM
ATTACHMENT D ..... EQUIPMENT TABLE
ATTACHMENT E ..... EMISSION UNIT FORM(S)
ATTACHMENT F..... SCHEDULE OF COMPLIANCE FORM (SEE NOTE)
ATTACHMENT G..... AIR POLLUTION CONTROL DEVICE FORM (SEE NOTE)
ATTACHMENT H .... COMPLIANCE ASSURANCE MONITORING FORM (SEE NOTE)

APPENDIX A SUPPORTING CALCULATIONS
APPENDIX B PROPOSED PERMIT LANGUAGE
APPENDIX C ELECTRONIC SUBMITTAL

Notes:
ATTACHMENT F – N/A – Source is in compliance with all facility wide requirements
ATTACHMENT G – N/A – No control devices utilized at the facility
ATTACHMENT H – N/A – No CAM plan requirements at the facility

APPLICATION FOR PERMIT

Title V Operating Permit Renewal Application

Hunt Compressor Station, Facility ID No. 039-00101
Elkview, West Virginia

Columbia Gas Transmission, LLC
1700 MacCorkle Avenue, SE
Charleston, West Virginia

June 2016

WEST VIRGINIA DEPARTMENT OF ENVIRONMENTAL PROTECTION

DIVISION OF AIR QUALITY

601 57th Street SE

Charleston, WV 25304

Phone: (304) 926-0475

www.dep.wv.gov/daq

INITIAL/RENEWAL TITLE V PERMIT APPLICATION - GENERAL FORMS

Section 1: General Information

1. **Name of Applicant (As registered with the WV Secretary of State's Office):** Columbia Gas Transmission, LLC	**2. Facility Name or Location:** Hunt Compressor Station
3. DAQ Plant ID No.: 039-00101	**4. Federal Employer ID No. (FEIN):** 31-0802435-30

5. **Permit Application Type:**

☐ Initial Permit — When did operations commence? 1950

☒ Permit Renewal — What is the expiration date of the existing permit? 10/31/2017

☐ Update to Initial/Renewal Permit Application

6. Type of Business Entity:

☐ Corporation ☐ Governmental Agency ☒ LLC
☐ Partnership ☐ Limited Partnership

7. Is the Applicant the:

☐ Owner ☐ Operator ☒ Both

If the Applicant is not both the owner and operator, please provide the name and address of the other party.

_____

_____

_____

8. Number of onsite employees:

Less than ten (10) employees

9. Governmental Code:

☒ Privately owned and operated; 0
☐ Federally owned and operated; 1
☐ State government owned and operated; 2
☐ County government owned and operated; 3
☐ Municipality government owned and operated; 4
☐ District government owned and operated; 5

10. Business Confidentiality Claims

Does this application include confidential information (per 45CSR31)? ☐ Yes ☒ No

If yes, identify each segment of information on each page that is submitted as confidential, and provide justification for each segment claimed confidential, including the criteria under 45CSR§31-4.1, and in accordance with the DAQ's *"PRECAUTIONARY NOTICE-CLAIMS OF CONFIDENTIALITY"* guidance.

11. Mailing Address		
Street or P.O. Box: 1700 MacCorkle Avenue, SE		
City: Charleston	**State:** WV	**Zip:** 25314
Telephone Number: (304) 357-2047	**Fax Number:** (304) 357-2770	

12. Facility Location		
Street: 105 Patterson Drive Secondary Route 37	**City:** Elkview	**County:** Kanawha
UTM Easting: 458.067 km	**UTM Northing:** 4,262.852 km	**Zone:** ☒ 17 or ☐ 18
Directions: From Charleston, take I-79 North to Elkview exit, turn left and travel on Secondary Route 43 to town of Frame. Turn left onto Secondary Route 37 and station is about 0.75 miles on the left		
Portable Source? ☐ Yes ☒ No		
Is facility located within a nonattainment area? ☐ Yes ☒ No		**If yes, for what air pollutants?**
Is facility located within 50 miles of another state? ☒ Yes ☐ No		**If yes, name the affected state(s).** Ohio
Is facility located within 100 km of a Class I Area[1]? ☐ Yes ☒ No **If no, do emissions impact a Class I Area[1]?** ☐ Yes ☒ No		**If yes, name the area(s).**
[1] *Class I areas include Dolly Sods and Otter Creek Wilderness Areas in West Virginia, and Shenandoah National Park and James River Face Wilderness Area in Virginia.*		

13. Contact Information		
Responsible Official: Tim Sweeney		**Title:** Manager of Operations
Street or P.O. Box: 1700 MacCorkle Avenue, SE		
City: Charleston	**State:** WV	**Zip:** 25314
Telephone Number: (304) 722-8486	**Fax Number:** (304) 722-8420	
E-mail address: tsweeney@cpg.com		
Environmental Contact: Kelly Taylor		**Title:** Environmental Coordinator
Street or P.O. Box: 1700 MacCorkle Avenue, SE		
City: Charleston	**State:** WV	**Zip:** 25314
Telephone Number: (304) 357-2047	**Fax Number:** (304) 357-2770	
E-mail address: kellytaylor@cpg.com		
Application Preparer: Jesse Hanshaw		**Title:** Principal Engineer
Company: SLR International Corporation		
Street or P.O. Box: 8 Capitol St., Suite 300		
City: Charleston	**State:** WV	**Zip:** 25301
Telephone Number: (681) 205-8949	**Fax Number:** (681) 205-8969	
E-mail address: jhanshaw@slrconsulting.com		

14. Facility Description

List all processes, products, NAICS and SIC codes for normal operation, in order of priority. Also list any process, products, NAICS and SIC codes associated with any alternative operating scenarios if different from those listed for normal operation.

Process	Products	NAICS	SIC
Natural Gas Transmission	Natural Gas	486210	4922

Provide a general description of operations.

Hunt Compressor Station is a natural gas transmission facility covered by Standard Industrial Classification (SIC) Code 4922. The station has the potential to operate twenty-four (24) hours per day, seven (7) days per week, fifty-two (52) weeks per year. The station consists of one (1) 1100 hp, 2SLB reciprocating engine, one (1) 132 hp, 4SRB reciprocating engine/generator, and one (1) 1.56 mmBtu/hr heating system boiler.

15. Provide an **Area Map** showing plant location as **ATTACHMENT A**.

16. Provide a **Plot Plan(s)**, e.g. scaled map(s) and/or sketch(es) showing the location of the property on which the stationary source(s) is located as **ATTACHMENT B**. For instructions, refer to "Plot Plan - Guidelines."

17. Provide a detailed **Process Flow Diagram(s)** showing each process or emissions unit as **ATTACHMENT C**. Process Flow Diagrams should show all emission units, control equipment, emission points, and their relationships.

Section 2: Applicable Requirements

18. Applicable Requirements Summary	
Instructions: Mark all applicable requirements.	
☒ SIP	☐ FIP
☐ Minor source NSR (45CSR13)	☐ PSD (45CSR14)
☒ NESHAP (45CSR34)	☐ Nonattainment NSR (45CSR19)
☐ Section 111 NSPS	☐ Section 112(d) MACT standards
☐ Section 112(g) Case-by-case MACT	☐ 112(r) RMP
☐ Section 112(i) Early reduction of HAP	☐ Consumer/commercial prod. reqts., section 183(e)
☐ Section 129 Standards/Reqts.	☐ Stratospheric ozone (Title VI)
☐ Tank vessel reqt., section 183(f)	☐ Emissions cap 45CSR§30-2.6.1
☐ NAAQS, increments or visibility (temp. sources)	☐ 45CSR27 State enforceable only rule
☒ 45CSR4 State enforceable only rule	☐ Acid Rain (Title IV, 45CSR33)
☐ Emissions Trading and Banking (45CSR28)	☐ **C**ompliance **A**ssurance **M**onitoring (40CFR64)
☐ CAIR NO_x Annual Trading Program (45CSR39)	☐ CAIR NO_x Ozone Season Trading Program (45CSR40)
☐ CAIR SO_2 Trading Program (45CSR41)	

19. Non Applicability Determinations

List all requirements which the source has determined not applicable and for which a permit shield is requested. The listing shall also include the rule citation and the reason why the shield applies.

45CSR4 – *To Prevent and Control the Discharge of Air Pollutants into the Open Air Which Causes or Contributes to an Objectionable Odor or Odors:* According to 45CSR§4-7.1, this rule shall not apply to the following sources of objectionable odor until such time as feasible control methods are developed: Internal Combustion Engines

45CSR10 – *To Prevent and Control Air Pollution from the Emission of Sulfur Oxides:* 45CSR10 is not applicable to the facility's heater because its maximum design heat input (DHI) is less than 10 MMBtu/hr

45CSR21 – *To Prevent and Control Air Pollution from the Emission of Volatile Organic Compounds:* All storage tanks at the station, which are listed as insignificant sources, are below 40,000 gallons in capacity which exempts the facility from 45CSR§21-28. The compressor station is not engaged in the extraction or fractionation of natural gas which exempts the facility from 45CSR§21-29

45CSR27 – *To Prevent and Control the Emissions of Toxic Air Pollutants:* Natural gas is included as a petroleum product and contains less than 5% benzene by weight. 45CSR§27-2.4 exempts equipment "used in the production and distribution of petroleum products providing that such equipment does not produce or contact materials containing more than 5% benzene by weight."

☒ Permit Shield

19. Non Applicability Determinations *(Continued)* - *Attach additional pages as necessary.*

List all requirements which the source has determined not applicable and for which a permit shield is requested. The listing shall also include the rule citation and the reason why the shield applies.

40 CFR 60 Subpart Dc – *Standards of Performance for Steam Generating Units:* The heating system boiler at this facility is less than 10 mmBtu/hr; Hence Subpart Dc is not applicable in accordance with 60.40c(a)

40 CFR 60 Subpart GG – *Standards of Performance for Stationary Gas Turbines:* There are no turbine engines at this facility.

40 CFR 60 Subparts K,Ka – *Standards of Performance for Storage Vessels for Petroleum Liquids:* All tanks at the facility are below 40,000 gallons in capacity as specified in 60.110a(a)

40 CFR 60 Subpart Kb – *Standards of Performance for Volatile Organic Liquid Storage Vessels:* All tanks at the facility are below 75m^3 (19,813 gallons) in capacity as specified in 60.110b(a)

40 CFR 60 Subpart KKK – *Standards of Performance for Equipment Leaks of VOC From Onshore Natural Gas Processing Plant:* This compressor station is not engaged in the extraction or fractionation of natural gas liquids from field gas, the fractionation of mixed natural gas liquids to natural gas products, or both.

40 CFR 60 Subpart IIII – *Standards of Performance for Stationary Compression Ignition Internal Combustion Engines*: There are no compression ignition engines at this facility.

40 CFR 60 Subpart JJJJ – *Standards of Performance for Stationary Spark Ignition Internal Combustion Engines:* All engines at the facility were constructed, reconstructed, or modified prior to the June 12, 2006 applicability date listed in 60.4230(a)(4).

40 CFR 60 Subpart KKKK – *Standards of Performance for Stationary Combustion Turbines* – There are no turbine engines at this facility.

40 CFR 60 Subpart OOOO – *Standards of Performance for Crude Oil and Natural Gas Production, Transmission and Distribution*: This subpart does not apply to the facility since the facility is a transmission facility. So it is exempt from the requirements for gas wells, centrifugal compressors, reciprocating compressors, and/or pneumatic controllers. Although this applies to storage vessels located at transmission facilities, there have been no storage vessels constructed, modified, or reconstructed after August 23, 2011 in accordance with 60.5365(e).

40 CFR 60 Subpart OOOOa – *Standards of Performance for Crude Oil and Natural Gas Facilities for which Construction, Modification, or Reconstruction Commenced after September 18, 2015*. The GHG and VOC requirements defined by this NSPS are not applicable to this site because there were no affected sources that commenced constructed prior to September 18, 2015 in accordance with [40CFR§60.5365a]

40 CFR 63 Subpart HHH – *National Emission Standards for Hazardous Air Pollutants from Natural gas Transmission and Storage Facilities:* This subpart does not apply to the facility since it is not a major source of HAPs as defined in 40CFR§63.1270(a) and does not operate a dehydration process.

40 CFR 63 Subpart YYYY – *Turbine MACT*: There are no turbine engines at this facility.

40 C.F.R. 63 Subpart DDDDD; *National Emission Standards for Hazardous Air Pollutants for Industrial, Commercial, and Institutional Boilers and Process Heaters:* This subpart does not apply to the facility since it not a major source of HAPs as defined in 40CFR§63.7575.

40 C.F.R. 63 Subpart JJJJJJ; *National Emission Standards for Hazardous Air Pollutants for Industrial, Commercial, and Institutional Boilers Area Sources:* This subpart does not apply to the facility since the heating system boiler is fueled by natural gas as defined in 40CFR§63.11195(e).

40 CFR 64 – *Compliance Assurance Monitoring (CAM):* There are no add-on controls at this facility; therefore, in accordance with 40CFR§64.2(b)(1), CAM is not applicable to this facility.to this facility.

☒ Permit Shield

20. Facility-Wide Applicable Requirements

List all facility-wide applicable requirements. For each applicable requirement, include the underlying rule/regulation citation and/or <u>construction permit</u> with the condition number. (*Note: Title V permit condition numbers alone are not the underlying applicable requirements*).

T5 – 3.1.1 – 45 CSR 6-3.1 – Open burning prohibited
T5 – 3.1.2 – 45 CSR 6-3.2 – Open burning exemption stipulations
T5 – 3.1.3 – 40 CFR Part 61 and 45 CSR 34 – Asbestos inspection and removal
T5 – 3.1.4 – 45 CSR 4 – No objectionable odors
T5 – 3.1.5 – 45 CSR 11-5.2 – Standby plans for emergency episodes
T5 – 3.1.6 – WV Code 22-5-4 (a) (14) – Annual emission inventory reporting
T5 – 3.1.7 – 40 CFR Part 82 Subpart F – Ozone depleting substances
T5 – 3.1.8 – 40 CFR Part 68 – Risk Management Plan
T5 – 3.1.9 – 45 CSR 30-12.7 – Odor Control for Mercaptan
T5 – 3.1.10 – 45 CSR 30-12.7 – Emergency Operating Conditions / unit replacement
T5 – 3.3.1 – 45 CSR 22-5-4(a)(14-15) & 45CSR13 - Stack Testing - Conduct stack testing as required
T5 – 3.4.1 – 45 CSR 30-5.1 - Monitoring information – general monitoring requirements
T5 – 3.4.2 – 45 CSR 30-5.1 - Retention of records - Maintain records for a period of 5 years
T5 – 3.4.3 – 45 CSR 30-5.1 - Odors - Maintain records of odor complaints and corrective actions
T5 – 3.4.4 – 45 CSR 17.3 – Fugitive PM shall not cause statutory Air Pollution
T5 – 3.5.1 – 45 CSR 30-4.4. and 5.1.c.3.D – All documents required by permit shall be certified by a Responsible Official
T5 – 3.5.2 – 45 CSR 30-5.1.c.3.E. - A permittee may request confidential treatment
T5 – 3.5.3 – 45 CSR 30-5 - Communication required or permitted to be made to the DEP and/or USEPA
T5 – 3.5.4 – 45 CSR 30-8 - Certified emissions statement – Operator will Submit a certified emissions statement and pay fees on an annual basis
T5 – 3.5.5 – 45 CSR 30-5.3.e. - Compliance certification. The permittee shall certify compliance with the conditions of this permit on the forms provided by the DAQ
T5 – 3.5.6 – 45 SR§30-5.1.c.3.A - Semi-annual monitoring reports.
T5 – 3.5.7 – 45 CSR 30-5.7.a through e. - Emergencies
T5 – 3.5.8 – 45 CSR 30-5.1.c.3.B. and C. - Deviations
T5 – 3.5.9 – 45 CSR 30-4.3.h.1.B. New applicable requirements. If any requirement is promulgated, the permittee will meet such requirements on a timely basis
T5 – 3.5.10 – 45 CSR 30-5.1.c.3.C. Natural Gas Use certification during Compliance Certification

☒ Permit Shield

For all facility-wide applicable requirements listed above, provide monitoring/testing / recordkeeping / reporting which shall be used to demonstrate compliance. If the method is based on a permit or rule, include the condition number and/or citation. (Note: Each requirement listed above must have an associated method of demonstrating compliance. If there is not already a required method in place, then a method must be proposed.)

T5 – 3.1.3 – 40 CFR Part 61 and 45 CSR 34 – Prior to demolition/construction buildings will be inspected for asbestos and documented accordingly
T5 – 3.1.4 – 45 CSR 4 – Permittee shall maintain records of all odor complaints received
T5 – 3.1.5 – 45 CSR 11 – Upon request by the Secretary, the permittee shall prepare a standby plan
T5 – 3.1.6 – WV 22-5-4 – The permittee shall submit annual emission inventory reports
T5 – 3.1.7 – 40 CFR Part 82 Subpart F – The permittee will prohibit maintenance, service, or repair of appliances containing ozone depleting substances without persons certified pursuant to 40 CFR 82.161
T5 – 3.1.8 – 40 CFR Part 68 – Should the permittee become subject to 40 CFR Part 68, a RMP shall be submitted
T5 – 3.1.10 – 45CSR§30-12.7 For emergency situations which interrupt the critical supply of natural gas to the public, and which pose a life threatening circumstance to the customer, the permittee is allowed to temporarily replace failed engine(s). Proper notice will be provided to the WVDAQ
T5 – 3.3.1 – 45 CSR 22-5-4 Stack Testing – All protocols and reports will be submitted to the WVDAQ
T5 – 3.4.1 & 3.4.2 – 45 CSR 30-5.1 Retention of Records - Maintain records of all information required by permit for 5 yrs.
T5 – 3.4.3 – 45 CSR 30-5.1 Odors - Maintain records of all odor complaints and responses.
T5 – 3.5.1 – 45 CSR 30-4.4 *and* 5.1 Responsible Official - Reports, certifications, etc. shall contain a certification by the responsible official.

T5 – 3.5.4 – 45 CSR 30-8 Certified emissions statement – Operator will Submit a certified emissions statement and pay fees on an annual basis
T5 – 3.5.5 – 45 SR§30-5.3.e Compliance Certification - Prepare and submit an emission inventory as requested

T5 – 3.5.6 – 45 CSR§30-5.1.c.3.A. Semi-annual monitoring reports.
T5 – 3.5.7 – 45 CSR30-5.7.a through e. - For reporting emergency situations, refer to Section 2.17 of this permit
T5 – 3.5.8 – 45 CSR 30-5.1.c.3.B. and C. – Deviations, In addition to required monitoring reports, the permittee shall promptly submit supplemental reports and notices of deviations / include upset conditions, cause of deviation(s) and corrective actions.
T5 – 3.5.9 – 45 CSR 30-4.3.h.1.B. New applicable requirements. If any requirement is promulgated, the permittee will meet such requirements on a timely basis
T5 – 3.5.10 – 45 CSR 30-5.1.c.3.C. During compliance certification, the facility shall certify that the facility burns natural gas in all stationary equipment except, when applicable, for emergency equipment.

Are you in compliance with all facility-wide applicable requirements? ☒ Yes ☐ No

If no, complete the **Schedule of Compliance Form** as **ATTACHMENT F**.

21. Active Permits/Consent Orders		
Permit or Consent Order Number	Date of Issuance MM/DD/YYYY	List any Permit Determinations that Affect the Permit *(if any)*
R30-03900101-2012	10/31/2012	
	/ /	
	/ /	
	/ /	
	/ /	
	/ /	
	/ /	
	/ /	
	/ /	
	/ /	
	/ /	
	/ /	
	/ /	
	/ /	
	/ /	
	/ /	
	/ /	
	/ /	
	/ /	
	/ /	
	/ /	

22. Inactive Permits/Obsolete Permit Conditions		
Permit Number	Date of Issuance	Permit Condition Number
	/ /	
	/ /	
	/ /	
	/ /	
	/ /	
	/ /	
	/ /	
	/ /	
	/ /	
	/ /	
	/ /	
	/ /	
	/ /	
	/ /	
	/ /	
	/ /	
	/ /	
	/ /	
	/ /	
	/ /	
	/ /	
	/ /	
	/ /	
	/ /	
	/ /	
	/ /	

Section 3: Facility-Wide Emissions

23. Facility-Wide Emissions Summary [Tons per Year]	
Criteria Pollutants	Potential Emissions
Carbon Monoxide (CO)	11.65
Nitrogen Oxides (NO_X)	124.54
Lead (Pb)	-
Particulate Matter ($PM_{2.5}$)[1]	2.11
Particulate Matter (PM_{10})[1]	2.11
Total Particulate Matter (TSP)	2.11
Sulfur Dioxide (SO_2)	0.04
Volatile Organic Compounds (VOC)	8.49
Hazardous Air Pollutants[2]	Potential Emissions
Benzene	0.08
Toluene	0.04
Ethylbenzene	0.01
Xylene	0.01
n-Hexane	0.03
Formaldehyde	2.35
Acetaldehyde	0.33
Total HAPs	3.40
Regulated Pollutants other than Criteria and HAP	Potential Emissions
$CO2_e$	5,824.9

[1]*$PM_{2.5}$ and PM_{10} are components of TSP.*
[2]*For HAPs that are also considered PM or VOCs, emissions should be included in both the HAPs section and the Criteria Pollutants section.*

Section 4: Insignificant Activities

24. Insignificant Activities (Check all that apply)		
☒	1.	Air compressors and pneumatically operated equipment, including hand tools.
☐	2.	Air contaminant detectors or recorders, combustion controllers or shutoffs.
☒	3.	Any consumer product used in the same manner as in normal consumer use, provided the use results in a duration and frequency of exposure which are not greater than those experienced by consumer, and which may include, but not be limited to, personal use items; janitorial cleaning supplies, office supplies and supplies to maintain copying equipment.
☒	4.	Bathroom/toilet vent emissions.
☒	5.	Batteries and battery charging stations, except at battery manufacturing plants.
☐	6.	Bench-scale laboratory equipment used for physical or chemical analysis, but not lab fume hoods or vents. Many lab fume hoods or vents might qualify for treatment as insignificant (depending on the applicable SIP) or be grouped together for purposes of description.
☐	7.	Blacksmith forges.
☐	8.	Boiler water treatment operations, not including cooling towers.
☒	9.	Brazing, soldering or welding equipment used as an auxiliary to the principal equipment at the source.
☐	10.	CO_2 lasers, used only on metals and other materials which do not emit HAP in the process.
☒	11.	Combustion emissions from propulsion of mobile sources, except for vessel emissions from Outer Continental Shelf sources.
☒	12.	Combustion units designed and used exclusively for comfort heating that use liquid petroleum gas or natural gas as fuel.
☒	13.	Comfort air conditioning or ventilation systems not used to remove air contaminants generated by or released from specific units of equipment.
☐	14.	Demineralized water tanks and demineralizer vents.
☐	15.	Drop hammers or hydraulic presses for forging or metalworking.
☐	16.	Electric or steam-heated drying ovens and autoclaves, but not the emissions from the articles or substances being processed in the ovens or autoclaves or the boilers delivering the steam.
☐	17.	Emergency (backup) electrical generators at residential locations.

24. Insignificant Activities (Check all that apply)

☐ 18. Emergency road flares.

☒ 19. Emission units which do not have any applicable requirements and which emit criteria pollutants (CO, NO_x, SO_2, VOC and PM) into the atmosphere at a rate of less than 1 pound per hour and less than 10,000 pounds per year aggregate total for each criteria pollutant from all emission units.

Please specify all emission units for which this exemption applies along with the quantity of criteria pollutants emitted on an hourly and annual basis:

Emission Point	*VOC Emissions (lb/hr)*	*VOC Emissions (lb/yr)*
A06	0.000	0.37
A07	0.000	1.11
A08	0.249	2181.71
A09	0.286	2504.95
C04	0.000	0.74
Totals	**0.54**	**4,688.89**

☐ 20. Emission units which do not have any applicable requirements and which emit hazardous air pollutants into the atmosphere at a rate of less than 0.1 pounds per hour and less than 1,000 pounds per year aggregate total for all HAPs from all emission sources. This limitation cannot be used for any source which emits dioxin/furans nor for toxic air pollutants as per 45CSR27.

Please specify all emission units for which this exemption applies along with the quantity of hazardous air pollutants emitted on an hourly and annual basis:

☐ 21. Environmental chambers not using hazardous air pollutant (HAP) gases.

☒ 22. Equipment on the premises of industrial and manufacturing operations used solely for the purpose of preparing food for human consumption.

☐ 23. Equipment used exclusively to slaughter animals, but not including other equipment at slaughterhouses, such as rendering cookers, boilers, heating plants, incinerators, and electrical power generating equipment.

☒ 24. Equipment used for quality control/assurance or inspection purposes, including sampling equipment used to withdraw materials for analysis.

☐ 25. Equipment used for surface coating, painting, dipping or spray operations, except those that will emit VOC or HAP.

☒ 26. Fire suppression systems.

☒ 27. Firefighting equipment and the equipment used to train firefighters.

☒ 28. Flares used solely to indicate danger to the public.

☒ 29. Fugitive emission related to movement of passenger vehicle provided the emissions are not counted for applicability purposes and any required fugitive dust control plan or its equivalent is submitted.

☐ 30. Hand-held applicator equipment for hot melt adhesives with no VOC in the adhesive formulation.

☒ 31. Hand-held equipment for buffing, polishing, cutting, drilling, sawing, grinding, turning or machining wood, metal or plastic.

☐ 32. Humidity chambers.

24. Insignificant Activities (Check all that apply)		
☐	33.	Hydraulic and hydrostatic testing equipment.
☒	34.	Indoor or outdoor kerosene heaters.
☒	35.	Internal combustion engines used for landscaping purposes.
☐	36.	Laser trimmers using dust collection to prevent fugitive emissions.
☐	37.	Laundry activities, except for dry-cleaning and steam boilers.
☒	38.	Natural gas pressure regulator vents, excluding venting at oil and gas production facilities.
☐	39.	Oxygen scavenging (de-aeration) of water.
☐	40.	Ozone generators.
☒	41.	Plant maintenance and upkeep activities (e.g., grounds-keeping, general repairs, cleaning, painting, welding, plumbing, re-tarring roofs, installing insulation, and paving parking lots) provided these activities are not conducted as part of a manufacturing process, are not related to the source's primary business activity, and not otherwise triggering a permit modification. (Cleaning and painting activities qualify if they are not subject to VOC or HAP control requirements. Asphalt batch plant owners/operators must still get a permit if otherwise requested.)
☒	42.	Portable electrical generators that can be moved by hand from one location to another. "Moved by Hand" means that it can be moved without the assistance of any motorized or non-motorized vehicle, conveyance, or device.
☐	43.	Process water filtration systems and demineralizers.
☒	44.	Repair or maintenance shop activities not related to the source's primary business activity, not including emissions from surface coating or de-greasing (solvent metal cleaning) activities, and not otherwise triggering a permit modification.
☐	45.	Repairs or maintenance where no structural repairs are made and where no new air pollutant emitting facilities are installed or modified.
☐	46.	Routing calibration and maintenance of laboratory equipment or other analytical instruments.
☐	47.	Salt baths using nonvolatile salts that do not result in emissions of any regulated air pollutants. Shock chambers.
☐	48.	Shock chambers.
☐	49.	Solar simulators.
☒	50.	Space heaters operating by direct heat transfer.
☐	51.	Steam cleaning operations.
☐	52.	Steam leaks.
☐	53.	Steam sterilizers.
☒	54.	Steam vents and safety relief valves.
☐	55.	Storage tanks, reservoirs, and pumping and handling equipment of any size containing soaps, vegetable oil, grease, animal fat, and nonvolatile aqueous salt solutions, provided appropriate lids and covers are utilized.
☐	56.	Storage tanks, vessels, and containers holding or storing liquid substances that will not emit any VOC or HAP. Exemptions for storage tanks containing petroleum liquids or other volatile organic liquids should be based on size limits such as storage tank capacity and vapor pressure of liquids stored and are not appropriate for this list.
☐	57.	Such other sources or activities as the Director may determine.
☒	58.	Tobacco smoking rooms and areas.
☒	59.	Vents from continuous emissions monitors and other analyzers.

Section 5: Emission Units, Control Devices, and Emission Points

25. Equipment Table
Fill out the **Title V Equipment Table** and provide it as **ATTACHMENT D**.
26. Emission Units
For each emission unit listed in the **Title V Equipment Table**, fill out and provide an **Emission Unit Form** as **ATTACHMENT E**.
For each emission unit not in compliance with an applicable requirement, fill out a **Schedule of Compliance Form** as **ATTACHMENT F**.
27. Control Devices
For each control device listed in the **Title V Equipment Table**, fill out and provide an **Air Pollution Control Device Form** as **ATTACHMENT G**.
For any control device that is required on an emission unit in order to meet a standard or limitation for which the potential pre-control device emissions of an applicable regulated air pollutant is greater than or equal to the Title V Major Source Threshold Level, refer to the **Compliance Assurance Monitoring (CAM) Form(s)** for CAM applicability. Fill out and provide these forms, if applicable, for each Pollutant Specific Emission Unit (PSEU) as **ATTACHMENT H**.

Section 6: Certification of Information

28. Certification of Truth, Accuracy and Completeness and Certification of Compliance

*Note: This Certification must be signed by a responsible official. The **original**, signed in **blue ink**, must be submitted with the application. Applications without an **original** signed certification will be considered as incomplete.*

a. Certification of Truth, Accuracy and Completeness

I certify that I am a responsible official (as defined at 45CSR§30-2.38) and am accordingly authorized to make this submission on behalf of the owners or operators of the source described in this document and its attachments. I certify under penalty of law that I have personally examined and am familiar with the statements and information submitted in this document and all its attachments. Based on my inquiry of those individuals with primary responsibility for obtaining the information, I certify that the statements and information are to the best of my knowledge and belief true, accurate, and complete. I am aware that there are significant penalties for submitting false statements and information or omitting required statements and information, including the possibility of fine and/or imprisonment.

b. Compliance Certification

Except for requirements identified in the Title V Application for which compliance is not achieved, I, the undersigned hereby certify that, based on information and belief formed after reasonable inquiry, all air contaminant sources identified in this application are in compliance with all applicable requirements.

Responsible official (type or print)

Name: Tim Sweeney	Title: Manager of Operations

Responsible official's signature:

Signature: _____ Signature Date: 6-28-2016

(Must be signed and dated in blue ink)

Note: Please check all applicable attachments included with this permit application:

☒	ATTACHMENT A: Area Map
☒	ATTACHMENT B: Plot Plan(s)
☒	ATTACHMENT C: Process Flow Diagram(s)
☒	ATTACHMENT D: Equipment Table
☒	ATTACHMENT E: Emission Unit Form(s)
☐	ATTACHMENT F: Schedule of Compliance Form(s)
☐	ATTACHMENT G: Air Pollution Control Device Form(s)
☐	ATTACHMENT H: Compliance Assurance Monitoring (CAM) Form(s)

All of the required forms and additional information can be found and downloaded from, the DEP website at www.dep.wv.gov/daq, requested by phone (304) 926-0475, and/or obtained through the mail.

ATTACHMENT A

AREA MAP

Title V Operating Permit Renewal Application

Hunt Compressor Station, Facility ID No. 039-00101
Elkview, West Virginia

Columbia Gas Transmission, LLC
1700 MacCorkle Avenue, SE
Charleston, West Virginia

June 2016

GPS Coordinates of Sites:
Lat: 38.51306, Long: -81.48098

UTM Coordinates of Sites:
Easting: 458.067 km, Northing: 4,262.852 km, Zone: 17

Columbia Gas Transmission, LLC
1700 MacCorkle Avenue, SE
Charleston, WV 25314

Report
Title V Operating Permit Renewal Application
Hunt Compressor Station (ID No. 039-00101)

Drawing
Attachment A - Area Map

Date: May 2016

Drawn By: CLB

Project: 116.01272.00021

SLR

ATTACHMENT B

PLOT PLAN

Title V Operating Permit Renewal Application

Hunt Compressor Station, Facility ID No. 039-00101
Elkview, West Virginia

Columbia Gas Transmission, LLC
1700 MacCorkle Avenue, SE
Charleston, West Virginia

June 2016

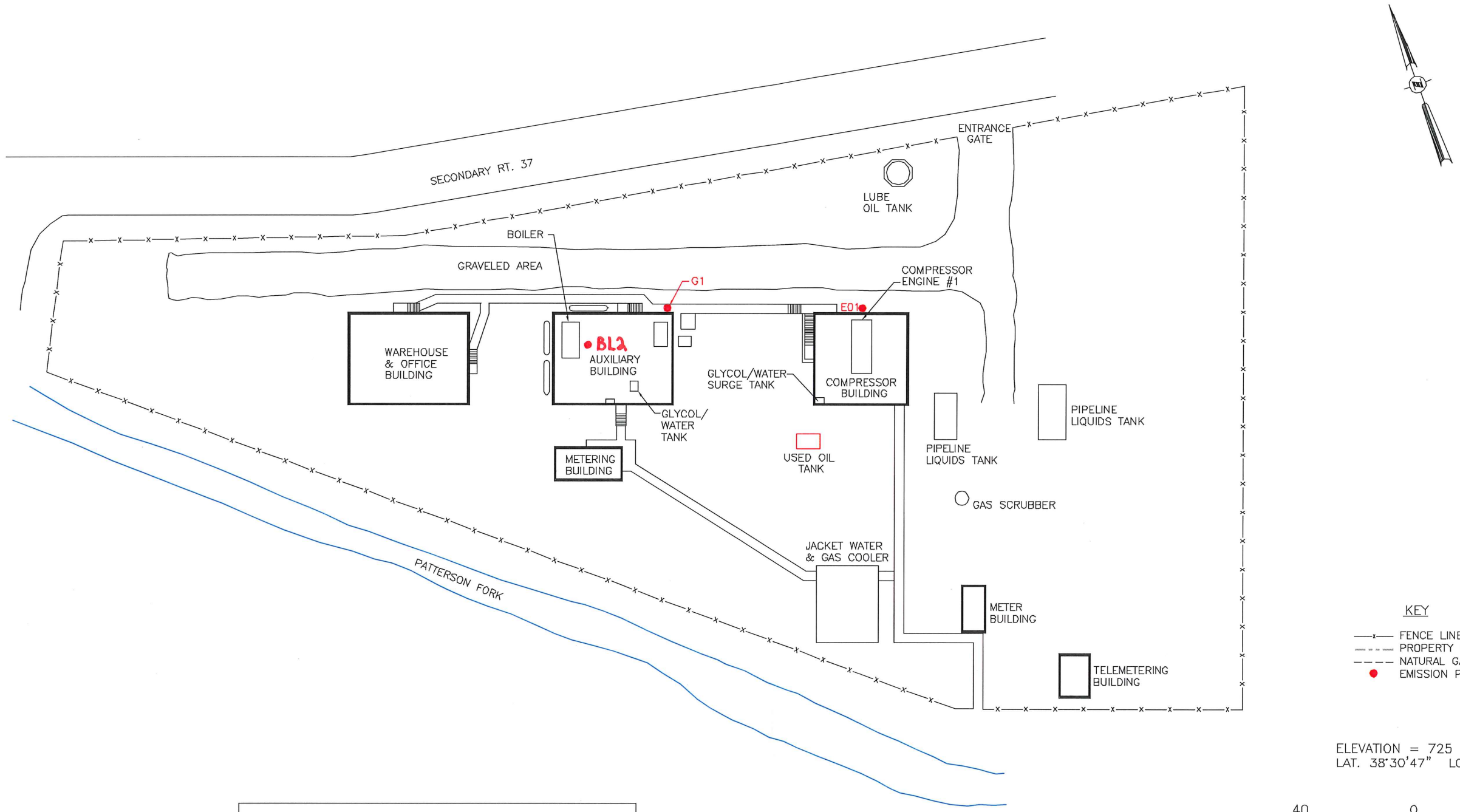

KEY

- FENCE LINE
- PROPERTY BOUNDARY
- NATURAL GAS PIPE LINE
- EMISSION POINT

ELEVATION = 725 FEET
LAT. 38°30'47" LONG. 81°28'28"

40 0 40

SCALE IN FEET

SIGNIFICANT EMISSION UNITS

Emission Point ID Number	Equipment Category
E01	Recip Engine/Integral Compressor No. 01801
G1	Recip Engine/Generator No. 018G1
BL2	Heating System Boiler BLR2

SCALE	DESIGNED BY	DATE	DRAWING TITLE
AS SHOWN			Site Plan Columbia Gas Transmission Corp. Hunt Station
	DRAWN BY TSH	DATE 22SEP10	CAD DRAWING FILE:
	CHECKED BY DW	DATE 22SEP10	CONTRACT NO. 31827062 / DRAWING NO. HUNT-BM3 / REV. 0
	APPROVED BY DW	DATE 22SEP10	

P: Common_Projects COLUMBIA GENERAL CADD Hunt-bm3.dwg September 22, 2010 - 10:58 AM

ATTACHMENT C

PROCESS FLOW DIAGRAM

Title V Operating Permit Renewal Application

Hunt Compressor Station, Facility ID No. 039-00101
Elkview, West Virginia

Columbia Gas Transmission, LLC
1700 MacCorkle Avenue, SE
Charleston, West Virginia

June 2016

ATTACHMENT C
HUNT COMPRESSOR STATION PROCESS FLOW DIAGRAM

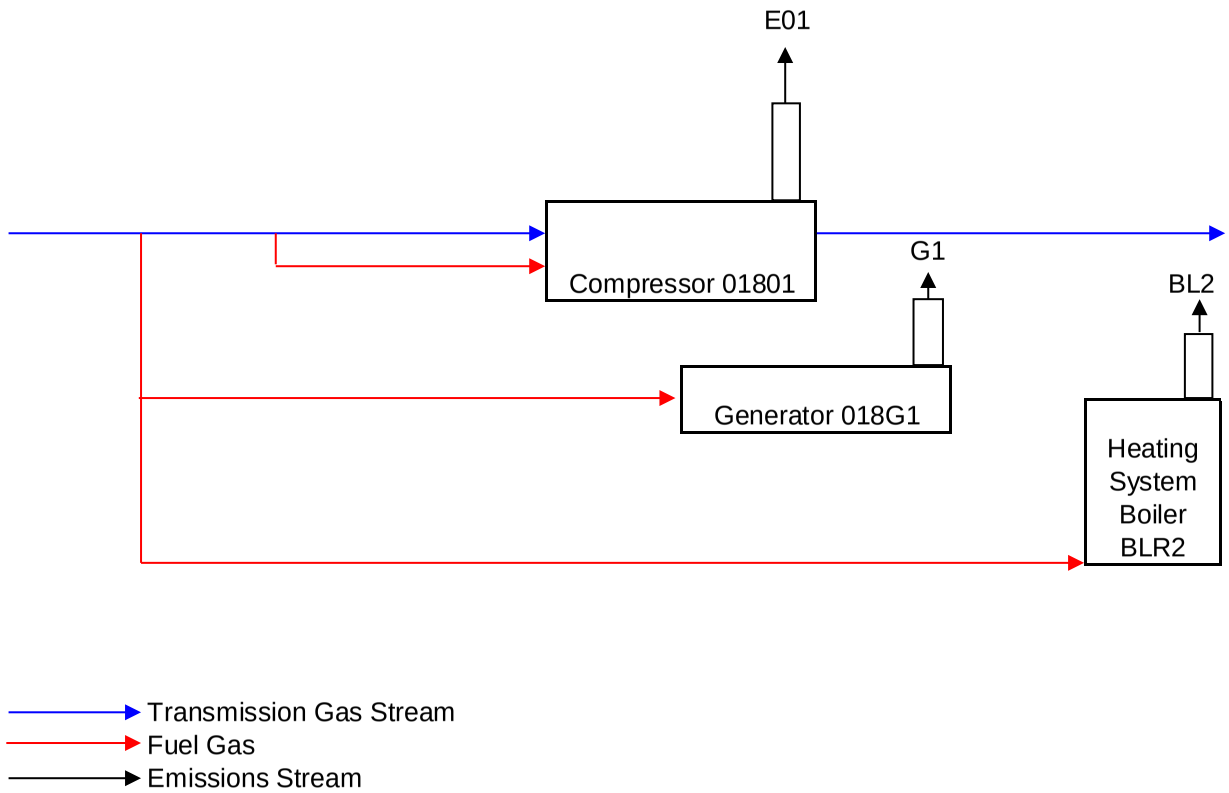

ATTACHMENT D

EQUIPMENT TABLE

Title V Operating Permit Renewal Application

Hunt Compressor Station, Facility ID No. 039-00101
Elkview, West Virginia

Columbia Gas Transmission, LLC
1700 MacCorkle Avenue, SE
Charleston, West Virginia

June 2016

ATTACHMENT D - Title V Equipment Table

(includes all emission units at the facility except those designated as insignificant activities in Section 4, Item 24 of the General Forms)

Emission Point ID[1]	Control Device[1]	Emission Unit ID[1]	Emission Unit Description	Design Capacity	Year Installed/ Modified
E01	N/A	01801*	Reciprocating Engine/Integral Compressor; Cooper-Bessemer GMV-8STF; 2 Cycle, Lean Burn	1,100 hp	1950
G1	N/A	018G1*	Reciprocating Engine/Generator; LeRoi D-1000; 4 Cycle, Rich Burn	132 hp	1964
BL2	N/A	BLR2*	Heating System Boiler; Weil-Mclain; Model # LGB-13	1.56 mmBtu/hr	2007

[1]For 45CSR13 permitted sources, the numbering system used for the emission points, control devices, and emission units should be consistent with the numbering system used in the 45CSR13 permit. For grandfathered sources, the numbering system should be consistent with registrations or emissions inventory previously submitted to DAQ. For emission points, control devices, and emissions units which have not been previously labeled, use the following 45CSR13 numbering system: 1S, 2S, 3S,... or other appropriate description for emission units; 1C, 2C, 3C,... or other appropriate designation for control devices; 1E, 2E, 3E, ... or other appropriate designation for emission points.

*This equipment burns pipeline quality natural gas only.

ATTACHMENT E

EMISSION UNIT FORM(S)

Title V Operating Permit Renewal Application

Hunt Compressor Station, Facility ID No. 039-00101
Elkview, West Virginia

Columbia Gas Transmission, LLC
1700 MacCorkle Avenue, SE
Charleston, West Virginia

June 2016

ATTACHMENT E - Emission Unit Form

Emission Unit Description

Emission unit ID number	**Emission unit name:**	**List any control devices associated with this emission unit:**
01801 (002-01)	Reciprocating Engine/Integral Compressor	NA

Provide a description of the emission unit (type, method of operation, design parameters, etc.):

2-cycle, lean burn

Manufacturer:	**Model number:**	**Serial number:**
Cooper-Bessemer	GMV-8-STF	NA
Construction date:	**Installation date:**	**Modification date(s):**
NA	1950	NA

Design Capacity (examples: furnaces - tons/hr, tanks - gallons): 1,100 hp

Maximum Hourly Throughput:	**Maximum Annual Throughput:**	**Maximum Operating Schedule:**
NA	NA	8,760

Fuel Usage Data **(fill out all applicable fields)**

Does this emission unit combust fuel? X Yes ___ No	**If yes, is it?** __ Indirect Fired X Direct Fired
Maximum design heat input and/or maximum horsepower rating: 1,100 hp	**Type and Btu/hr rating of burners:** 8,800 Btu/hp-hr

List the primary fuel type(s) and if applicable, the secondary fuel type(s). For each fuel type listed, provide the maximum hourly and annual fuel usage for each.

Natural Gas
9,490 scf/hr / 83,132,400 scf/yr

Describe each fuel expected to be used during the term of the permit.

Fuel Type	Max. Sulfur Content	Max. Ash Content	BTU Value
Natural Gas	Pipeline Quality		1,020 Btu/scf

Emissions Data		
Criteria Pollutants	Potential Emissions	
	PPH	TPY
Carbon Monoxide (CO)	See Appendix A	
Nitrogen Oxides (NO_X)		
Lead (Pb)		
Particulate Matter ($PM_{2.5}$)		
Particulate Matter (PM_{10})		
Total Particulate Matter (TSP)		
Sulfur Dioxide (SO_2)		
Volatile Organic Compounds (VOC)		
Hazardous Air Pollutants	Potential Emissions	
	PPH	TPY
	See Appendix A	
Regulated Pollutants other than Criteria and HAP	Potential Emissions	
	PPH	TPY

List the method(s) used to calculate the potential emissions (include dates of any stack tests conducted, versions of software used, source and dates of emission factors, etc.).

See Appendix A

Applicable Requirements
List all applicable requirements for this emission unit. For each applicable requirement, include the underlying rule/regulation citation and/or construction permit with the condition number. (*Note: Title V permit condition numbers alone are not the underlying applicable requirements*). If an emission limit is calculated based on the type of source and design capacity or if a standard is based on a design parameter, this information should also be included. 40 C.F.R. § 63.6603(a) and Table 2d (Line 6) – Maintenance Requirements 40 C.F.R. § 63.6605 – Operating Requirements 40 C.F.R. § 63.6625(e)(5), (h), and (j) – Monitoring Requirements 40 C.F.R. § 63.6640(a) and Table 6 (Line 9) – Continuous Compliance Requirements 40 C.F.R. § 63.6660 – Recordkeeping Requirements 40 C.F.R. § 63.6665 – General Requirements/Provisions
X Permit Shield
For all applicable requirements listed above, provide monitoring/testing/recordkeeping/reporting which shall be used to demonstrate compliance. If the method is based on a permit or rule, include the condition number or citation. (Note: Each requirement listed above must have an associated method of demonstrating compliance. If there is not already a required method in place, then a method must be proposed.) 40 C.F.R. § 63.6603(a) and Table 2d (Line 6) – Change oil and oil filter, and inspect spark plugs, hoses, and belts every 4,320 hours of operation, or annually, whichever occurs first, and replace as necessary 40 C.F.R. § 63.6605, 63.6625(e)(5), 63.6640 and Table 6 (Line 9) – Work or Management Practices: Operate and Maintain the RICE according to the manufacturer's instructions OR develop and follow your own maintenance plan 40 C.F.R. § 63.6625 (h) – Minimize Idle Time during Startup to not exceed 30 Minutes 40 C.F.R. § 63.6625 (j) – Oil Analysis Program in lieu of Oil change requirement in Table 2d (Line 6) 40 C.F.R. § 63.6655 (d), and (e)(3) – Keep records of maintenance conducted and operating schedule on the RICE 40 C.F.R. § 63.6660 – Records retained for five (5) years and readily available for expeditious review
Are you in compliance with all applicable requirements for this emission unit? X Yes ___No If no, complete the **Schedule of Compliance Form** as **ATTACHMENT F**.

ATTACHMENT E - Emission Unit Form

Emission Unit Description

Emission unit ID number	**Emission unit name:**	**List any control devices associated with this emission unit:**
018G1 (002-04)	Reciprocating Engine/Generator	NA

Provide a description of the emission unit (type, method of operation, design parameters, etc.):
4-cycle, rich burn

Manufacturer:	**Model number:**	**Serial number:**
LeRoi	D-1000	NA
Construction date:	**Installation date:**	**Modification date(s):**
NA	1964	NA

Design Capacity (examples: furnaces - tons/hr, tanks - gallons): 132 hp

Maximum Hourly Throughput:	**Maximum Annual Throughput:**	**Maximum Operating Schedule:**
NA	NA	8,760

Fuel Usage Data **(fill out all applicable fields)**

Does this emission unit combust fuel? X Yes ___ No	**If yes, is it?** __ Indirect Fired X Direct Fired
Maximum design heat input and/or maximum horsepower rating: 132 hp	**Type and Btu/hr rating of burners:** 10,600 Btu/hp-hr

List the primary fuel type(s) and if applicable, the secondary fuel type(s). For each fuel type listed, provide the maximum hourly and annual fuel usage for each.
Natural Gas
1,372 scf/hr / 12,018,720 scf/yr

Describe each fuel expected to be used during the term of the permit.

Fuel Type	Max. Sulfur Content	Max. Ash Content	BTU Value
Natural Gas	Pipeline Quality		1,020 Btu/scf

Emissions Data		
Criteria Pollutants	Potential Emissions	
	PPH	TPY
Carbon Monoxide (CO)	See Appendix A	
Nitrogen Oxides (NO_X)		
Lead (Pb)		
Particulate Matter ($PM_{2.5}$)		
Particulate Matter (PM_{10})		
Total Particulate Matter (TSP)		
Sulfur Dioxide (SO_2)		
Volatile Organic Compounds (VOC)		
Hazardous Air Pollutants	Potential Emissions	
	PPH	TPY
	See Appendix A	
Regulated Pollutants other than Criteria and HAP	Potential Emissions	
	PPH	TPY

List the method(s) used to calculate the potential emissions (include dates of any stack tests conducted, versions of software used, source and dates of emission factors, etc.).

See Appendix A

Applicable Requirements
List all applicable requirements for this emission unit. For each applicable requirement, include the underlying rule/regulation citation and/or construction permit with the condition number. (*Note: Title V permit condition numbers alone are not the underlying applicable requirements*). If an emission limit is calculated based on the type of source and design capacity or if a standard is based on a design parameter, this information should also be included. 40 C.F.R. § 63.6603 (a) and Table 2d (Line 5) – Maintenance Requirements 40 C.F.R. § 63.6605 – Operating Requirements 40 C.F.R. § 63.6625 (e)(3), (f), (h), and (j) – Monitoring Requirements 40 C.F.R. § 63.6640 and Table 6 (Line 9) – Continuous Compliance Requirements 40 C.F.R. § 63.6660 – Recordkeeping Requirements 40 C.F.R. § 63.6665 – General Requirements/Provisions
X Permit Shield
For all applicable requirements listed above, provide monitoring/testing/recordkeeping/reporting which shall be used to demonstrate compliance. If the method is based on a permit or rule, include the condition number or citation. (Note: Each requirement listed above must have an associated method of demonstrating compliance. If there is not already a required method in place, then a method must be proposed.) 40 C.F.R. § 63.6603(a) and Table 2d (Line 5) – Change oil and filter every 500 hours of operation, or annually whichever comes first; inspect spark plugs every 1000 hours of operation, or annually, whichever occurs first; inspect hoses every 500 hours of operation, or annually, whichever occurs first and replace as necessary 40 C.F.R. § 63.6605, 63.6625(e)(3), 63.6640 and Table 6 (Line 9) – Work or Management Practices: Operate and Maintain the RICE according to the manufacturer's instructions OR develop and follow your own maintenance plan 40 C.F.R. § 63.6625 (f) – Install and monitor hours of operation 40 C.F.R. § 63.6625 (h) – Minimize Idle Time during Startup to not exceed 30 Minutes 40 C.F.R. § 63.6625 (j) – Oil Analysis Program in lieu of Oil change requirement in Table 2d (Line 5) 40 C.F.R. § 63.6655 (d), (e)(2), (f)(2) – Keep records of maintenance conducted and operating schedule on the RICE 40 C.F.R. § 63.6660 – Records retained for five (5) years and readily available for expeditious review
Are you in compliance with all applicable requirements for this emission unit? X Yes ___No If no, complete the **Schedule of Compliance Form** as **ATTACHMENT F**.

ATTACHMENT E - Emission Unit Form

Emission Unit Description

Emission unit ID number:	**Emission unit name:**	**List any control devices associated with this emission unit:**
BLR2	Heating System Boiler #2	NA

Provide a description of the emission unit (type, method of operation, design parameters, etc.):

Heating System Boiler

Manufacturer:	**Model number:**	**Serial number:**
Weil-Mclain	LGB-13	NA
Construction date:	**Installation date:**	**Modification date(s):**
NA	2007	NA

Design Capacity (examples: furnaces - tons/hr, tanks - gallons): 1.56 mmBtu/hr

Maximum Hourly Throughput:	**Maximum Annual Throughput:**	**Maximum Operating Schedule:**
NA	NA	8,760

Fuel Usage Data **(fill out all applicable fields)**

Does this emission unit combust fuel? X Yes ___ No	**If yes, is it?** X Indirect Fired ___ Direct Fired
Maximum design heat input and/or maximum horsepower rating: 1.56 mmBtu/hr	**Type and Btu/hr rating of burners:** 1.56 mmBtu/hr

List the primary fuel type(s) and if applicable, the secondary fuel type(s). For each fuel type listed, provide the maximum hourly and annual fuel usage for each.

Natural Gas
1,530 scf/hr / 13,400,000 scf/yr

Describe each fuel expected to be used during the term of the permit.

Fuel Type	Max. Sulfur Content	Max. Ash Content	BTU Value
Natural Gas	Pipeline Quality		1,020 Btu/scf

Emissions Data		
Criteria Pollutants	Potential Emissions	
	PPH	TPY
Carbon Monoxide (CO)	See Appendix A	
Nitrogen Oxides (NO_X)		
Lead (Pb)		
Particulate Matter ($PM_{2.5}$)		
Particulate Matter (PM_{10})		
Total Particulate Matter (TSP)		
Sulfur Dioxide (SO_2)		
Volatile Organic Compounds (VOC)		
Hazardous Air Pollutants	Potential Emissions	
	PPH	TPY
	See Appendix A	
Regulated Pollutants other than Criteria and HAP	Potential Emissions	
	PPH	TPY

List the method(s) used to calculate the potential emissions (include dates of any stack tests conducted, versions of software used, source and dates of emission factors, etc.).

See Appendix A

Applicable Requirements
List all applicable requirements for this emission unit. For each applicable requirement, include the underlying rule/regulation citation and/or construction permit with the condition number. (*Note: Title V permit condition numbers alone are not the underlying applicable requirements*). If an emission limit is calculated based on the type of source and design capacity or if a standard is based on a design parameter, this information should also be included. 45 CSR§2-3.1. – Opacity Limit; shall not exceed ten (10) percent opacity
X Permit Shield
For all applicable requirements listed above, provide monitoring/testing/recordkeeping/reporting which shall be used to demonstrate compliance. If the method is based on a permit or rule, include the condition number or citation. (Note: Each requirement listed above must have an associated method of demonstrating compliance. If there is not already a required method in place, then a method must be proposed.) 45 CSR§2-3.2 – Compliance shall be determined using Method 9
Are you in compliance with all applicable requirements for this emission unit? X Yes ___No If no, complete the **Schedule of Compliance Form** as **ATTACHMENT F**.

ATTACHMENT F

SCHEDULE OF COMPLIANCE FORM (NOT APPLICABLE)

Title V Operating Permit Renewal Application

Hunt Compressor Station, Facility ID No. 039-00101
Elkview, West Virginia

Columbia Gas Transmission, LLC
1700 MacCorkle Avenue, SE
Charleston, West Virginia

June 2016

ATTACHMENT G

AIR POLLUTION CONTROL DEVICE FORM (NOT APPLICABLE)

Title V Operating Permit Renewal Application

Hunt Compressor Station, Facility ID No. 039-00101
Elkview, West Virginia

Columbia Gas Transmission, LLC
1700 MacCorkle Avenue, SE
Charleston, West Virginia

June 2016

ATTACHMENT H

COMPLIANCE ASSURANCE MONITORING FORM (NOT APPLICABLE)

Title V Operating Permit Renewal Application

Hunt Compressor Station, Facility ID No. 039-00101
Elkview, West Virginia

Columbia Gas Transmission, LLC
1700 MacCorkle Avenue, SE
Charleston, West Virginia

June 2016

APPENDIX A

SUPPORTING CALCULATIONS

Title V Operating Permit Renewal Application

Hunt Compressor Station, Facility ID No. 039-00101
Elkview, West Virginia

Columbia Gas Transmission, LLC
1700 MacCorkle Avenue, SE
Charleston, West Virginia

June 2016

Table 1. Annual Potential To Emit (PTE) Summary
Columbia Pipeline Group - Hunt Compressor Station

Criteria Pollutants

Proposed PTE - Criteria Pollutants

Source	PM	PM10	PM2.5	SO2	NOx	CO	VOC	CO2e
Engines (ton/yr)	2.055	2.055	2.055	0.030	123.873	11.082	5.098	5001.963
Heaters/Boilers/Reboilers (ton/yr)	0.051	0.051	0.051	0.005	0.670	0.563	0.037	799.505
Storage Tanks (ton/yr)	-	-	-	-	-	-	2.344	-
Fugitives (ton/yr)	-	-	-	-	-	-	1.010	23.476
Total Emissions (ton/yr)	2.106	2.106	2.106	0.035	124.543	11.644	8.489	5824.944
Total Emissions (lb/hr)	0.481	0.481	0.481	0.008	28.434	2.659	1.938	1329.896

Hazardous Air Pollutants (HAPs)

Proposed PTE - HAPs

Source	Acetaldehyde	Benzene	Toluene	Ethylbenzene	Xylene	n-Hexane	Formaldehyde	Total HAPs
Engines (ton/yr)	0.3300	0.0828	0.0410	0.0046	0.0114	0.0189	2.348	3.383
Heaters/Boilers/Reboilers (ton/yr)	-	0.0000	0.0000	-	-	0.0121	0.001	0.013
Storage Tanks (ton/yr)	-	-	-	-	-	-	-	0.000
Fugitives (ton/yr)	-	-	-	-	-	-	-	0.000
Total Emissions (ton/yr)	0.330	0.083	0.041	0.005	0.011	0.031	2.348	3.396
Total Emissions (lb/hr)	0.075	0.019	0.009	0.001	0.003	0.007	0.536	0.775

Table 2. Reciprocating Engine / Integral Compressor Emissions (E01)
Cooper-Bessermer GMV-8STF; 2SLB
Columbia Pipeline Group - Hunt Compressor Station

Pollutant	Maximum Hourly Emissions					Annual Emissions				
	Emission Factor			PTE per Engine (lb/hr)		Emission Factor			PTE per Engine (tons/yr)	
Criteria Pollutants										
PM/PM10/PM2.5	4.83E-02	lb/MMBtu	(1)	0.47	(a)	4.83E-02	lb/MMBtu	(1)	2.05	(c)
SO_2	0.25 grains S / 100 ft^3		(2)	0.0068	(e)	0.25 grains S / 100 ft^3		(2)	0.03	(f)
NOx	2.56E-02	lb/hp-hr	(3)	28.11	(b)	2.56E-02	lb/hp-hr	(3)	123.10	(d)
CO	2.03E-03	lb/hp-hr	(3)	2.23	(b)	2.03E-03	lb/hp-hr	(3)	9.78	(d)
VOC	1.20E-01	lb/MMBtu	(1)	1.16	(a)	1.20E-01	lb/MMBtu	(1)	5.09	(c)
Hazardous Air Pollutants										
1,1,2,2-Tetrachloroethane	6.63E-05	lb/MMBtu	(1)	0.001	(a)	6.63E-05	lb/MMBtu	(1)	0.003	(c)
1,1,2-Trichloroethane	5.27E-05	lb/MMBtu	(1)	0.001	(a)	5.27E-05	lb/MMBtu	(1)	0.002	(c)
1,3-Butadiene	8.20E-04	lb/MMBtu	(1)	0.008	(a)	8.20E-04	lb/MMBtu	(1)	0.035	(c)
1,3-Dichloropropene	4.38E-05	lb/MMBtu	(1)	0.000	(a)	4.38E-05	lb/MMBtu	(1)	0.002	(c)
2-Methylnapthalene	2.14E-05	lb/MMBtu	(1)	0.000	(a)	2.14E-05	lb/MMBtu	(1)	0.001	(c)
2,2,4-Trimethylpentane	8.46E-04	lb/MMBtu	(1)	0.008	(a)	8.46E-04	lb/MMBtu	(1)	0.036	(c)
Acetaldehyde	7.76E-03	lb/MMBtu	(1)	0.075	(a)	7.76E-03	lb/MMBtu	(1)	0.329	(c)
Acrolein	7.78E-03	lb/MMBtu	(1)	0.075	(a)	7.78E-03	lb/MMBtu	(1)	0.330	(c)
Benzene	1.94E-03	lb/MMBtu	(1)	0.019	(a)	1.94E-03	lb/MMBtu	(1)	0.082	(c)
Biphenyl	3.95E-06	lb/MMBtu	(1)	0.000	(a)	3.95E-06	lb/MMBtu	(1)	0.000	(c)
Carbon Tetrachloride	6.07E-05	lb/MMBtu	(1)	0.001	(a)	6.07E-05	lb/MMBtu	(1)	0.003	(c)
Chlorobenzene	4.44E-05	lb/MMBtu	(1)	0.000	(a)	4.44E-05	lb/MMBtu	(1)	0.002	(c)
Chloroform	4.71E-05	lb/MMBtu	(1)	0.000	(a)	4.71E-05	lb/MMBtu	(1)	0.002	(c)
Ethylbenzene	1.08E-04	lb/MMBtu	(1)	0.001	(a)	1.08E-04	lb/MMBtu	(1)	0.005	(c)
Ethylene Dibromide	7.34E-05	lb/MMBtu	(1)	0.001	(a)	7.34E-05	lb/MMBtu	(1)	0.003	(c)
Formaldehyde	5.52E-02	lb/MMBtu	(1)	0.534	(a)	5.52E-02	lb/MMBtu	(1)	2.340	(c)
Methanol	2.48E-03	lb/MMBtu	(1)	0.024	(a)	2.48E-03	lb/MMBtu	(1)	0.105	(c)
Methylene Chloride	1.47E-04	lb/MMBtu	(1)	0.001	(a)	1.47E-04	lb/MMBtu	(1)	0.006	(c)
n-Hexane	4.45E-04	lb/MMBtu	(1)	0.004	(a)	4.45E-04	lb/MMBtu	(1)	0.019	(c)
Naphthalene	9.63E-05	lb/MMBtu	(1)	0.001	(a)	9.63E-05	lb/MMBtu	(1)	0.004	(c)
PAH (POM)	1.34E-04	lb/MMBtu	(1)	0.001	(a)	1.34E-04	lb/MMBtu	(1)	0.006	(c)
Phenol	4.21E-05	lb/MMBtu	(1)	0.000	(a)	4.21E-05	lb/MMBtu	(1)	0.002	(c)
Styrene	5.48E-05	lb/MMBtu	(1)	0.001	(a)	5.48E-05	lb/MMBtu	(1)	0.002	(c)
Toluene	9.63E-04	lb/MMBtu	(1)	0.009	(a)	9.63E-04	lb/MMBtu	(1)	0.041	(c)
Vinyl Chloride	2.47E-05	lb/MMBtu	(1)	0.000	(a)	2.47E-05	lb/MMBtu	(1)	0.001	(c)
Xylenes	2.68E-04	lb/MMBtu	(1)	0.003	(a)	2.68E-04	lb/MMBtu	(1)	0.011	(c)
Total HAP				**0.770**					**3.372**	
Greenhouse Gas Emissions										
CO_2	116.89	lb/MMBtu	(4)	1131.49	(a)	116.89	lb/MMBtu	(4)	4955.91	(c)
CH_4	2.2E-03	lb/MMBtu	(4)	0.02	(a)	2.2E-03	lb/MMBtu	(4)	0.09	(c)
N_2O	2.2E-04	lb/MMBtu	(4)	0.00	(a)	2.2E-04	lb/MMBtu	(4)	0.01	(c)
$CO_2e^{(g)}$	-	-		1132.66					4961.03	

Calculations:

Maximum Hourly Emissions - If emission factor note 1 or 4 is used, use calculation (a). If emission factor note 3 is used, use calculation (b).

(a) Maximum Hourly Emissions (lb/hr) = Emission factor (lb/MMBtu) * (1MMBtu/1000000 Btu) * Engine Power Output (hp) * Average BSFC (Btu/hp-hr)

(b) Maximum Hourly Emissions (lb/hr) = Emission factor (lb/hp-hr) * Engine Power Output (hp)

Annual Emissions - If emission factor note 1 or 4 is used, use calculation (c). If emission factor note 3 is used, use calculation (d).

(c) Annual emissions (tons/yr) = Emission factor (lb/MMBtu) * (1MMBtu/1000000Btu) * Engine Power Output (hp) * Average BSFC (Btu/hp-hr) * Annual Hours of operation (hr/yr) * (1ton/2000lbs)

(d) Annual emissions (tons/yr) = Emission factor (lb/hp-hr) * Engine Power Output (hp) * Annual Hours of operation (hr/yr) * (1ton/2000lbs)

SO_2 Emissions - If emission factor note 2 is used, use calculations (e) and (f) for hourly and annual emissions, respectively.

(e) Maximum Hourly Emissions SO2 Caclulation (lb/hr) = (0.25 grain S/100ft3) * Fuel throughput (ft3/hr) * (1lb/7000 grains) * (lbmol S/32.06 lb S) * (lbmol SO2/ lbmol S) *(64.07 lb SO2/lbmol SO2)

(f) Annual Emissions SO2 Caclulation (ton/yr) = (0.25 grain S/100ft3) * Fuel throughput (ft3/hr) * (1lb/7000 grains) * (lbmol S/32.06 lb S) * (lbmol SO2/ lbmol S) *(64.07 lb SO2/lbmol SO2) * Annual hours of operation (hr/yr) * (1ton/2000lbs)

MAXIMUM HOURLY EMISSION INPUTS		
Engine Power Output (kW) =	820	
Engine Power Output (hp) =	1,100	
Number of Engines =	1	
Average BSFC (BTU/HP-hr) =	8,800	(5)
Heat Content Natural Gas(Btu/scf) =	1,020.0	(6)
Fuel Throughput (ft3/hr) =	9,490.2	(7)
PTE Hours of Operation =	1	

ANNUAL EMISSION INPUTS		
Engine Power Output (kW) =	820	
Engine Power Output (hp) =	1,100	
Number of Engines =	1	
Average BSFC (BTU/HP-hr) =	8,800	(5)
Heat Content Natural Gas(Btu/scf) =	1,020.0	(6)
Fuel Throughput (ft3/hr) =	9,490.2	(7)
PTE Hours of Operation =	8,760	

(g) CO_2 equivalent = $[(CO_2 \text{ emissions})*(GWP_{CO2})]+[(CH_4 \text{ emissions})*(GWP_{CH4})]+[(N_2O \text{ emissions})*(GWP_{N2O})]$

Global Warming Potential (GWP)

CO_2	1	(8)
CH_4	25	(8)
N_2O	298	(8)

Notes:

(1) AP-42, Chapter 3.2, Table 3.2-1. *Natural Gas-fired Reciprocating Engines* (7/00). Uncontrolled Emission Factors for 2-Stroke Lean-Burn Engines.

(2) AP-42, Chapter 5.3, Section 5.3.1

(3) Emission Factors derived from Stack Test Data

(4) Emission factors are from 40 CFR 98, Subpart C, Table C-1 and C-2.

(5) Fuel consumption from manufacturer's specification sheet.

(6) Value obtained from AP-42, Chapter 3.2, Table 3.2-1, footnote b

(7) Fuel throughput = BSFC (BTU/HP-hr) x Power (HP) / Heat Content (BTU/scf)

(8) Global Warming Potentials obtained from 40 CFR 98, Subpart A, Table A-1

Table 3. Reciprocating Engine / Generator Emissions (G1)
Leroi D-1000; 4SRB
Columbia Pipeline Group - Hunt Compressor Station

Pollutant	Maximum Hourly Emissions					Annual Emissions				
	Emission Factor			PTE per Engine (lb/hr)		Emission Factor			PTE per Engine (tons/yr)	
Criteria Pollutants										
PM/PM10/PM2.5	1.94E-02	lb/MMBtu	(1)	0.027	(a)	1.94E-02	lb/MMBtu	(1)	0.01	(c)
SO_2	0.25 grains S / 100 ft^3		(2)	0.001	(e)	0.25 grains S / 100 ft^3		(2)	0.000	(f)
NOx	2.21E+00	lb/MMBtu	(1)	3.09	(a)	2.21E+00	lb/MMBtu	(1)	0.77	(c)
CO	3.72E+00	lb/MMBtu	(1)	5.21	(a)	3.72E+00	lb/MMBtu	(1)	1.30	(c)
VOC	2.96E-02	lb/MMBtu	(1)	0.04	(a)	2.96E-02	lb/MMBtu	(1)	0.01	(c)
Hazardous Air Pollutants										
1,1,2,2-Tetrachloroethane	2.53E-05	lb/MMBtu	(1)	0.000	(a)	2.53E-05	lb/MMBtu	(1)	0.000	(c)
1,1,2-Trichloroethane	1.53E-05	lb/MMBtu	(1)	0.000	(a)	1.53E-05	lb/MMBtu	(1)	0.000	(c)
1,3-Butadiene	6.63E-04	lb/MMBtu	(1)	0.001	(a)	6.63E-04	lb/MMBtu	(1)	0.000	(c)
1,3-Dichloropropene	1.27E-05	lb/MMBtu	(1)	0.000	(a)	1.27E-05	lb/MMBtu	(1)	0.000	(c)
Acetaldehyde	2.79E-03	lb/MMBtu	(1)	0.004	(a)	2.79E-03	lb/MMBtu	(1)	0.001	(c)
Acrolein	2.63E-03	lb/MMBtu	(1)	0.004	(a)	2.63E-03	lb/MMBtu	(1)	0.001	(c)
Benzene	1.58E-03	lb/MMBtu	(1)	0.002	(a)	1.58E-03	lb/MMBtu	(1)	0.001	(c)
Carbon Tetrachloride	1.77E-05	lb/MMBtu	(1)	0.000	(a)	1.77E-05	lb/MMBtu	(1)	0.000	(c)
Chlorobenzene	1.29E-05	lb/MMBtu	(1)	0.000	(a)	1.29E-05	lb/MMBtu	(1)	0.000	(c)
Chloroform	1.37E-05	lb/MMBtu	(1)	0.000	(a)	1.37E-05	lb/MMBtu	(1)	0.000	(c)
Ethylbenzene	2.48E-05	lb/MMBtu	(1)	0.000	(a)	2.48E-05	lb/MMBtu	(1)	0.000	(c)
Ethylene Dibromide	2.13E-05	lb/MMBtu	(1)	0.000	(a)	2.13E-05	lb/MMBtu	(1)	0.000	(c)
Formaldehyde	2.05E-02	lb/MMBtu	(1)	0.029	(a)	2.05E-02	lb/MMBtu	(1)	0.007	(c)
Methanol	3.06E-03	lb/MMBtu	(1)	0.004	(a)	3.06E-03	lb/MMBtu	(1)	0.001	(c)
Methylene Chloride	4.12E-05	lb/MMBtu	(1)	0.000	(a)	4.12E-05	lb/MMBtu	(1)	0.000	(c)
Naphthalene	9.71E-05	lb/MMBtu	(1)	0.000	(a)	9.71E-05	lb/MMBtu	(1)	0.000	(c)
PAH (POM)	1.41E-04	lb/MMBtu	(1)	0.000	(a)	1.41E-04	lb/MMBtu	(1)	0.000	(c)
Styrene	1.19E-05	lb/MMBtu	(1)	0.000	(a)	1.19E-05	lb/MMBtu	(1)	0.000	(c)
Toluene	5.58E-04	lb/MMBtu	(1)	0.001	(a)	5.58E-04	lb/MMBtu	(1)	0.000	(c)
Vinyl Chloride	7.16E-06	lb/MMBtu	(1)	0.000	(a)	7.16E-06	lb/MMBtu	(1)	0.000	(c)
Xylenes	1.95E-04	lb/MMBtu	(1)	0.000	(a)	1.95E-04	lb/MMBtu	(1)	0.000	(c)
Total HAP				**0.045**					**0.011**	
Greenhouse Gas Emissions										
CO_2	116.89	lb/MMBtu	(4)	163.55	(a)	116.89	lb/MMBtu	(4)	40.89	(c)
CH_4	2.2E-03	lb/MMBtu	(4)	0.00	(a)	2.2E-03	lb/MMBtu	(4)	0.00	(c)
N_2O	2.2E-04	lb/MMBtu	(4)	0.00	(a)	2.2E-04	lb/MMBtu	(4)	0.00	(c)
$CO_2e^{(g)}$	-	-		163.72					40.93	

Calculations:

Maximum Hourly Emissions - If emission factor note 1 or 4 is used, use calculation (a). If emission factor note 3 is used, use calculation (b).

(a) Maximum Hourly Emissions (lb/hr) = Emission factor (lb/MMBtu) * (1MMBtu/1000000 Btu) * Engine Power Output (hp) * Average BSFC (Btu/hp-hr)

(b) Maximum Hourly Emissions (lb/hr) = Emission factor (lb/hp-hr) * Engine Power Output (hp)

Annual Emissions - If emission factor note 1 or 4 is used, use calculation (c). If emission factor note 3 is used, use calculation (d).

(c) Annual emissions (tons/yr) = Emission factor (lb/MMBtu) * (1MMBtu/1000000Btu) * Engine Power Output (hp) * Average BSFC (Btu/hp-hr) * Annual Hours of operation (hr/yr) * (1ton/2000lbs)

(d) Annual emissions (tons/yr) = Emission factor (lb/hp-hr) * Engine Power Output (hp) * Annual Hours of operation (hr/yr) * (1ton/2000lbs)

SO_2 Emissions - If emission factor note 2 is used, use calculations (e) and (f) for hourly and annual emissions, respectively.

(e) Maximum Hourly Emissions SO2 Caclulation (lb/hr) = (0.25 grain S/100ft3) * Fuel throughput (ft3/hr) * (1lb/7000 grains) * (lbmol S/32.06 lb S) * (lbmol SO2/ lbmol S) *(64.07 lb SO2/lbmol SO2)

(f) Annual Emissions SO2 Caclulation (ton/yr) = (0.25 grain S/100ft3) * Fuel throughput (ft3/hr) * (1lb/7000 grains) * (lbmol S/32.06 lb S) * (lbmol SO2/ lbmol S) *(64.07 lb SO2/lbmol SO2) * Annual hours of operation (hr/yr) * (1ton/2000lbs)

MAXIMUM HOURLY EMISSION INPUTS		
Engine Power Output (kW) =	98	
Engine Power Output (hp) =	132	
Number of Engines =	1	
Average BSFC (BTU/HP-hr) =	10,600	(5)
Heat Content Natural Gas(Btu/scf) =	1,020.0	(6)
Fuel Throughput (ft3/hr) =	1,371.8	(7)
PTE Hours of Operation =	1	

ANNUAL EMISSION INPUTS		
Engine Power Output (kW) =	98	
Engine Power Output (hp) =	132	
Number of Engines =	1	
Average BSFC (BTU/HP-hr) =	10,600	(5)
Heat Content Natural Gas(Btu/scf) =	1,020.0	(6)
Fuel Throughput (ft3/hr) =	1,371.8	(7)
PTE Hours of Operation =	500	

(g) CO_2 equivalent = $[(CO_2 \text{ emissions})*(GWP_{CO2})]+[(CH_4 \text{ emissions})*(GWP_{CH4})]+[(N_2O \text{ emissions})*(GWP_{N2O})]$

Global Warming Potential (GWP)

CO_2	1	(8)
CH_4	25	(8)
N_2O	298	(8)

Notes:

(1) AP-42, Chapter 3.2, Table 3.2-3. *Natural Gas-fired Reciprocating Engines* (7/00). Uncontrolled Emission Factors for 4-Stroke Rich-Burn Engines.

(2) AP-42, Chapter 5.3, Section 5.3.1

(3) Emission Factors derived from Stack Test Data

(4) Emission factors are from 40 CFR 98, Subpart C, Table C-1 and C-2.

(5) Fuel consumption from manufacturer's specification sheet.

(6) Value obtained from AP-42, Chapter 3.2, Table 3.2-1, footnote b

(7) Fuel throughput = BSFC (BTU/HP-hr) x Power (HP) / Heat Content (BTU/scf)

(8) Global Warming Potentials obtained from 40 CFR 98, Subpart A, Table A-1

Table 4. Heating System Boiler Emissions (BL2)
Weil-Mclain; Model # LGB-13
Columbia Pipeline Group - Hunt Compressor Station

Pollutant	Emission Factor			PTE (lb/hr)		PTE (ton/yr)	
Criteria Pollutants							
PM/PM10/PM2.5	7.6	lb/MMcf	(1)	0.012	(a)	0.05	(b)
SO_2	0.25 grains S / 100ft^3		(5)	0.001	(e)	0.005	(f)
NOx	100	lb/MMcf	(2)	0.15	(a)	0.67	(b)
CO	84	lb/MMcf	(2)	0.13	(a)	0.56	(b)
VOC	5.5	lb/MMcf	(1)	0.01	(a)	0.04	(b)
Hazardous Air Pollutants							
Arsenic	2.00E-04	lb/MMcf	(3)	0.00	(a)	0.000	(b)
Benzene	2.10E-03	lb/MMcf	(4)	0.00	(a)	0.000	(b)
Beryllium	1.20E-05	lb/MMcf	(3)	0.00	(a)	0.000	(b)
Cadmium	1.10E-03	lb/MMcf	(3)	0.00	(a)	0.000	(b)
Chromium	1.40E-03	lb/MMcf	(3)	0.00	(a)	0.000	(b)
Cobalt	8.40E-05	lb/MMcf	(3)	0.00	(a)	0.000	(b)
Dichlorobenzene	1.20E-03	lb/MMcf	(4)	0.00	(a)	0.000	(b)
Formaldehyde	7.50E-02	lb/MMcf	(4)	0.00	(a)	0.001	(b)
Hexane	1.80E+00	lb/MMcf	(4)	0.00	(a)	0.012	(b)
Lead	5.00E-04	lb/MMcf	(3)	0.00	(a)	0.000	(b)
Manganese	3.80E-04	lb/MMcf	(3)	0.00	(a)	0.000	(b)
Mercury	2.60E-04	lb/MMcf	(3)	0.00	(a)	0.000	(b)
Naphthalene	6.10E-04	lb/MMcf	(4)	0.00	(a)	0.000	(b)
Nickel	2.10E-03	lb/MMcf	(3)	0.00	(a)	0.000	(b)
PAH/POM	1.29E-03	lb/MMcf	(4)	0.00	(a)	0.000	(b)
Selenium	2.40E-05	lb/MMcf	(3)	0.00	(a)	0.000	(b)
Toluene	3.40E-03	lb/MMcf	(4)	0.00	(a)	0.000	(b)
Total HAP				0.000		0.013	
Greenhouse Gas Emissions							
CO_2	116.89	lb/MMBtu	(6)	182.35	(c)	798.68	(d)
CH_4	2.2E-03	lb/MMBtu	(6)	0.00	(c)	0.02	(d)
N_2O	2.2E-04	lb/MMBtu	(6)	0.00	(c)	0.00	(d)
$CO_2e^{(g)}$	-	-		182.54		799.51	

Calculations:

LB/MMCF

(a) Hourly emissions (lb/hr) = Emission Factor (lb/MMcf) * Fuel Use (MMCF/yr) / Annual hours of operation (hr/yr)

(b) Annual emissions (ton/yr) = Emission Factor (lb/MMcf) * Fuel Use (MMcf/yr) * (1ton/2000lbs)

LB/MMBTU

(c) Hourly Emissions (lb/hr) = Emission Factor (lb/MMBtu) * Fuel Use (MMBtu/hr)

(d) Annual Emissions (ton/yr) = Emission Factor (lb/MMBtu) * Fuel Use (MMBtu/hr) * Hours of operation (hr/yr) * (1ton/2000lbs)

SO_2

(e) Hourly Emissions SO2 Caclulation (lb/hr) = (0.25 grain S/100ft3) * Fuel throughput (MMft3/yr) * (1000000ft3/1MMft3) / annual hours of operation (hr/yr) * (1lb/7000 grains) * (lbmol S/32.06 lb S) * (lbmol SO2/ lbmol S) *(64.07 lb SO2/lbmol SO2)

(f) Annual Emissions SO2 Caclulation (ton/yr) = (0.25 grain S/100ft3) * Fuel throughput (MMft3/yr) * (1000000ft3/1MMft3) * (1lb/7000 grains) * (lbmol S/32.06 lb S) * (lbmol SO2/ lbmol S) *(64.07 lb SO2/lbmol SO2) * (1ton/2000lbs)

EMISSION INPUTS TABLE	
Fuel Use (MMBtu/hr) =	1.56
Hours of Operation (hr/yr)=	8760
MMBtu/MMcf=	1020
PTE Fuel Use (MMft3/yr) =	13.4

(g) CO_2 equivalent = [(CO_2 emissions)*(GWP_{CO2})]+[(CH_4 emissions)*(GWP_{CH4})]+[(N_2O emissions)*(GWP_{N2O})]
Global Warming Potential (GWP)

CO_2	1	(7)
CH_4	25	(7)
N_2O	298	(7)

Notes:

(1) AP-42, Chapter 1.4, Table 1.4-2. Emission Factors For Criteria Pollutants and Greenhouse Gases From Natural Gas Combustion, July 1998.

(2) AP-42, Chapter 1.4, Table 1.4-1. Emission Factors For Nitrogen Oxides (Nox) and Carbon Monoxide(CO) From Natural Gas Combustion, July 1998.

(3) AP-42, Chapter 1.4, Table 1.4-4. Emission Factors For Metals From Natural Gas Combustion, July 1998.

(4) AP-42, Chapter 1.4, Table 1.4-3. Emission Factors for Speciated Organic Compounds from Natural Gas Combustion, July 1998.

(5) AP-42, Chapter 5.3, Section 5.3.1

(6) Emission factors are from 40 CFR 98, Subpart C, Table C-1 and C-2.

(7) Global Warming Potentials obtained from 40 CFR 98, Subpart A, Table A-1

Table 5. Tank Emissions
Columbia Pipeline Group - Hunt Compressor Station

Emission Point	Tank Capacity (gal)	Tank Contents	Control Devices	Tank Throughput (bbls/day)	VOC Emission Factor (lbs/bbls)		VOC Emissions (lbs/yr)[(a)]	VOC Emissions (lb/hr)[(b)]	VOC Emissions (tons/yr)[(c)]
A06	1000	Used Oil	None	0.13	7.77E-03	(1)	0.37	0.000	0.000
A07	3000	Lube Oil	None	0.39	7.77E-03	(1)	1.11	0.000	0.001
A08	8000	Pipeline Liquids	None	2.09	2.86E+00	(2)	2181.71	0.249	1.091
A09	10000	Pipeline Liquids	None	2.61	2.63E+00	(2)	2504.95	0.286	1.252
C04	2000	Water Mixture	None	0.26	7.77E-03	(1)	0.74	0.000	0.000
Totals							**4688.89**	**0.54**	**2.34**

Calculations:

(a) VOC Emissions (lb/day) = Tank Throughput (bbls/day) * VOC Emission Factor (lbs/bbls)

(b) VOC Emissions (lb/hr) = VOC Emissions (lbs/yr) * (yr/8760hr)

(c) VOC Emissions (ton/yr) = VOC Emissions (lbs/yr) * (1ton/2000lbs)

Notes:

(1) VOC emission factor includes Working/Breathing losses as calculated from TANKS 4.0.9.d

(2) VOC emission factor includes Flashing/Working/Breathing losses calculated from pressurized liquid sample (GOR= 0.059 lb VOC/bbl) direct flash measurement added to working and breathing losses calculated using EPA Tanks 4.09. The pressurized liquid sample was taken from a high pressure separator at a similar site and is considered to be worst case representative with respect to gas composition and pressure at the Station

Table 6. Fugitive Leak Emissions
Columbia Pipeline Group - Hunt Compressor Station

Pollutant	Emission Factor			PTE[(a)] Gas Service (tons/yr)
Valves	9.9E-03	lb/hr/source	(1)	28.11
Low Bleed Pneumatic Valves	9.9E-03	lb/hr/source	(1)	0.48
Flanges	8.6E-04	lb/hr/source	(1)	8.53
Connector	4.4E-04	lb/hr/source	(1)	4.38
Other Points in Gas Service	1.9E-02	lb/hr/source	(1)	8.99
Total Gas Released	-	-		50.49
Total VOC Released (gas service)			(b)	**1.01**
			CO2e	23.48

Calculations:

(a) Annual emissions (tons/yr) = [Emission Factor (lb/hr/source)] x [Number of Sources] x [Hours of Operation per Year] x [0.0005 tons/ lb]

(b) Gas sample for station assumed to be worst case at 2 wt % VOC[(3)]

Number of Components in Gas Service

Valves=	647	(2)
Low Bleed Pneumatic Valves=	11	(2)
Connectors=	2,265	(2)
Other Points in Gas Service =	48	(2)
Maximum Hour of Operation =	8,760	

(1) Emission factors from 1995 EPA Protocol for Equipment Leak Emission Estimates, Table 2-4 Oil and Gas Production

(2) *Default Average Component Counts for Major Onshore Natural Gas Production Equipment* from 40 CFR 98, Subpart W, Table W-1B

(3) Worst case VOC wt % assumption for station based on gas sample analysis from compressor stations located in close proximity to the site

(4) Global Warming Potentials obtained from 40 CFR 98, Subpart A, Table A-1

APPENDIX B

PROPOSED PERMIT LANGUAGE

Title V Operating Permit Renewal Application

Hunt Compressor Station, Facility ID No. 039-00101
Elkview, West Virginia

Columbia Gas Transmission, LLC
1700 MacCorkle Avenue, SE
Charleston, West Virginia

June 2016

West Virginia Department of Environmental Protection
Division of Air Quality

Earl Ray Tomblin
Governor

Randy C. Huffman
Cabinet Secretary

Permit to Operate

Pursuant to

Title V

of the Clean Air Act

Issued to:

Columbia Gas Transmission, LLC

Hunt Compressor Station

R30-03900101-2016

William F. Durham

Director

Issued: • Effective: Draft
Expiration: • Renewal Application Due:

Permit Number: **R30-03900101-2016**
Permittee: **Columbia Gas Transmission, LLC**
Facility Name: **Hunt Compressor Station**
Permittee Mailing Address: **1700 MacCorkle Avenue, SE**
Charleston, WV 25314

This permit is issued in accordance with the West Virginia Air Pollution Control Act (West Virginia Code §§ 22-5-1 et seq.) and 45CSR30 — Requirements for Operating Permits. The permittee identified at the above-referenced facility is authorized to operate the stationary sources of air pollutants identified herein in accordance with all terms and conditions of this permit.

Facility Location:	Frame, Kanawha County, West Virginia
Facility Mailing Address:	105 Patterson Drive, Elkview, WV 25071
Telephone Number:	(304) 965-0976
Type of Business Entity:	LLC
Facility Description:	Natural Gas Transmission Facility
SIC Codes:	4922
UTM Coordinates:	458.067 km Easting • 4,262.852 km Northing • Zone 17

Permit Writer: Engineer Name

Any person whose interest may be affected, including, but not necessarily limited to, the applicant and any person who participated in the public comment process, by a permit issued, modified or denied by the Secretary may appeal such action of the Secretary to the Air Quality Board pursuant to article one [§§ 22B-1-1 et seq.], Chapter 22B of the Code of West Virginia. West Virginia Code §22-5-14.

Issuance of this Title V Operating Permit does not supersede or invalidate any existing permits under 45CSR13, 14 or 19, although all applicable requirements from such permits governing the facility's operation and compliance have been incorporated into the Title V Operating Permit.

Table of Contents

1.0. Emission Units and Active R13, R14, and R19 Permits 3

2.0. General Conditions 4

3.0. Facility-Wide Requirements and Permit Shield 13

Source-specific Requirements

4.0. Miscellaneous Indirect Natural Gas Heaters and Boilers less than 10 MMBtu/hr 21

5.0. 40 C.F.R. 63, Subpart ZZZZ GACT Requirements for 2SLB RICE 22

6.0 40 C.F.R. 63, Subpart ZZZZ GACT Requirements for Emergency RICE 25

1.0 Emission Units and Active R13, R14, and R19 Permits

1.1. Emission Units

Emission Unit ID	Emission Point ID	Emission Unit Description	Year Installed	Design Capacity	Control Device
BLR2*	BL2	Heating System Boiler; Wiel-Mclain, Model LGB-13	2007	1.56 MMBtu/hr	N/A
01801*	E02	Reciprocating Engine/Integral Compressor; Cooper-Bessemer GMV-8STF; 2-cycle, lean burn	1950	1,100 HP	N/A
018G1*	G1	Reciprocating Engine/Generator; LeRoi D-1000; 4-cycle, rich burn; Emergency	1964	132 HP	N/A

* All equipment is fueled exclusively with pipeline quality natural gas.

1.1. Active R13, R14, and R19 Permits

The underlying authority for any conditions from R13, R14, and/or R19 permits contained in this operating permit is cited using the original permit number (e.g. R13-1234). The current applicable version of such permit(s) is listed below.

Permit Number	Date of Issuance
NA	NA

2.0 General Conditions

2.1. Definitions

2.1.1. All references to the "West Virginia Air Pollution Control Act" or the "Air Pollution Control Act" mean those provisions contained in W.Va. Code §§ 22-5-1 to 22-5-18.

2.1.2. The "Clean Air Act" means those provisions contained in 42 U.S.C. §§ 7401 to 7671q, and regulations promulgated thereunder.

2.1.3. "Secretary" means the Secretary of the Department of Environmental Protection or such other person to whom the Secretary has delegated authority or duties pursuant to W.Va. Code §§ 22-1-6 or 22-1-8 (45CSR§30-2.12.). The Director of the Division of Air Quality is the Secretary's designated representative for the purposes of this permit.

2.1.4. Unless otherwise specified in a permit condition or underlying rule or regulation, all references to a "rolling yearly total" shall mean the sum of the monthly data, values or parameters being measured, monitored, or recorded, at any given time for the previous twelve (12) consecutive calendar months.

2.2. Acronyms

CAAA	Clean Air Act Amendments
CBI	Confidential Business Information
CEM	Continuous Emission Monitor
CES	Certified Emission Statement
C.F.R. *or* CFR	Code of Federal Regulations
CO	Carbon Monoxide
C.S.R. *or* CSR	Codes of State Rules
DAQ	Division of Air Quality
DEP	Department of Environmental Protection
FOIA	Freedom of Information Act
HAP	Hazardous Air Pollutant
HON	Hazardous Organic NESHAP
HP	Horsepower
lbs/hr *or* lb/hr	Pounds per Hour
LDAR	Leak Detection and Repair
m	Thousand
MACT	Maximum Achievable Control Technology
mm	Million
mmBtu/hr	Million British Thermal Units per Hour
mmft^3/hr *or* mmcf/hr	Million Cubic Feet Burned per Hour
NA *or* N/A	Not Applicable
NAAQS	National Ambient Air Quality Standards
NESHAPS	National Emissions Standards for Hazardous Air Pollutants
NO_x	Nitrogen Oxides
NSPS	New Source Performance Standards
PM	Particulate Matter
PM_{10}	Particulate Matter less than 10µm in diameter
pph	Pounds per Hour
ppm	Parts per Million
PSD	Prevention of Significant Deterioration
psi	Pounds per Square Inch
SIC	Standard Industrial Classification
SIP	State Implementation Plan
SO_2	Sulfur Dioxide
TAP	Toxic Air Pollutant
TPY	Tons per Year
TRS	Total Reduced Sulfur
TSP	Total Suspended Particulate
USEPA	United States Environmental Protection Agency
UTM	Universal Transverse Mercator
VEE	Visual Emissions Evaluation
VOC	Volatile Organic Compounds

2.3. Permit Expiration and Renewal

2.3.1. Permit duration. This permit is issued for a fixed term of five (5) years and shall expire on the date specified on the cover of this permit, except as provided in 45CSR§30-6.3.b. and 45CSR§30-6.3.c.
[45CSR§30-5.1.b.]

2.3.2. A permit renewal application is timely if it is submitted at least six (6) months prior to the date of permit expiration.
[45CSR§30-4.1.a.3.]

2.3.3. Permit expiration terminates the source's right to operate unless a timely and complete renewal application has been submitted consistent with 45CSR§30-6.2. and 45CSR§30-4.1.a.3.
[45CSR§30-6.3.b.]

2.3.4. If the Secretary fails to take final action to deny or approve a timely and complete permit application before the end of the term of the previous permit, the permit shall not expire until the renewal permit has been issued or denied, and any permit shield granted for the permit shall continue in effect during that time.
[45CSR§30-6.3.c.]

2.4. Permit Actions

2.4.1. This permit may be modified, revoked, reopened and reissued, or terminated for cause. The filing of a request by the permittee for a permit modification, revocation and reissuance, or termination, or of a notification of planned changes or anticipated noncompliance does not stay any permit condition.
[45CSR§30-5.1.f.3.]

2.5. Reopening for Cause

2.5.1. This permit shall be reopened and revised under any of the following circumstances:

a. Additional applicable requirements under the Clean Air Act or the Secretary's legislative rules become applicable to a major source with a remaining permit term of three (3) or more years. Such a reopening shall be completed not later than eighteen (18) months after promulgation of the applicable requirement. No such reopening is required if the effective date of the requirement is later than the date on which the permit is due to expire, unless the original permit or any of its terms and conditions has been extended pursuant to 45CSR§§30-6.6.a.1.A. or B.

b. Additional requirements (including excess emissions requirements) become applicable to an affected source under Title IV of the Clean Air Act (Acid Deposition Control) or other legislative rules of the Secretary. Upon approval by U.S. EPA, excess emissions offset plans shall be incorporated into the permit.

c. The Secretary or U.S. EPA determines that the permit contains a material mistake or that inaccurate statements were made in establishing the emissions standards or other terms or conditions of the permit.

d. The Secretary or U.S. EPA determines that the permit must be revised or revoked and reissued to assure compliance with the applicable requirements.

[45CSR§30-6.6.a.]

2.6. Administrative Permit Amendments

2.6.1. The permittee may request an administrative permit amendment as defined in and according to the procedures specified in 45CSR§30-6.4.
[45CSR§30-6.4.]

2.7. Minor Permit Modifications

2.7.1. The permittee may request a minor permit modification as defined in and according to the procedures specified in 45CSR§30-6.5.a.
[45CSR§30-6.5.a.]

2.8. Significant Permit Modification

2.8.1. The permittee may request a significant permit modification, in accordance with 45CSR§30-6.5.b., for permit modifications that do not qualify for minor permit modifications or as administrative amendments.
[45CSR§30-6.5.b.]

2.9. Emissions Trading

2.9.1. No permit revision shall be required, under any approved economic incentives, marketable permits, emissions trading, and other similar programs or processes for changes that are provided for in the permit and that are in accordance with all applicable requirements.
[45CSR§30-5.1.h.]

2.10. Off-Permit Changes

2.10.1. Except as provided below, a facility may make any change in its operations or emissions that is not addressed nor prohibited in its permit and which is not considered to be construction nor modification under any rule promulgated by the Secretary without obtaining an amendment or modification of its permit. Such changes shall be subject to the following requirements and restrictions:

a. The change must meet all applicable requirements and may not violate any existing permit term or condition.

b. The permittee must provide a written notice of the change to the Secretary and to U.S. EPA within two (2) business days following the date of the change. Such written notice shall describe each such change, including the date, any change in emissions, pollutants emitted and any applicable requirement that would apply as a result of the change.

c. The change shall not qualify for the permit shield.

d. The permittee shall keep records describing all changes made at the source that result in emissions of regulated air pollutants, but not otherwise regulated under the permit, and the emissions resulting from those changes.

e. No permittee may make any change subject to any requirement under Title IV of the Clean Air Act (Acid Deposition Control) pursuant to the provisions of 45CSR§30-5.9.

f. No permittee may make any changes which would require preconstruction review under any provision of Title I of the Clean Air Act (including 45CSR14 and 45CSR19) pursuant to the provisions of 45CSR§30-5.9.

[45CSR§30-5.9.]

2.11. Operational Flexibility

2.11.1. The permittee may make changes within the facility as provided by § 502(b)(10) of the Clean Air Act. Such operational flexibility shall be provided in the permit in conformance with the permit application and applicable requirements. No such changes shall be a modification under any rule or any provision of Title I of the Clean Air Act (including 45CSR14 and 45CSR19) promulgated by the Secretary in accordance with Title I of the Clean Air Act and the change shall not result in a level of emissions exceeding the emissions allowable under the permit.
[45CSR§30-5.8]

2.11.2. Before making a change under 45CSR§30-5.8., the permittee shall provide advance written notice to the Secretary and to U.S. EPA, describing the change to be made, the date on which the change will occur, any changes in emissions, and any permit terms and conditions that are affected. The permittee shall thereafter maintain a copy of the notice with the permit, and the Secretary shall place a copy with the permit in the public file. The written notice shall be provided to the Secretary and U.S. EPA at least seven (7) days prior to the date that the change is to be made, except that this period may be shortened or eliminated as necessary for a change that must be implemented more quickly to address unanticipated conditions posing a significant health, safety, or environmental hazard. If less than seven (7) days' notice is provided because of a need to respond more quickly to such unanticipated conditions, the permittee shall provide notice to the Secretary and U.S. EPA as soon as possible after learning of the need to make the change.
[45CSR§30-5.8.a.]

2.11.3. The permit shield shall not apply to changes made under 45CSR§30-5.8., except those provided for in 45CSR§30-5.8.d. However, the protection of the permit shield will continue to apply to operations and emissions that are not affected by the change, provided that the permittee complies with the terms and conditions of the permit applicable to such operations and emissions. The permit shield may be reinstated for emissions and operations affected by the change:

a. If subsequent changes cause the facility's operations and emissions to revert to those authorized in the permit and the permittee resumes compliance with the terms and conditions of the permit, or

b. If the permittee obtains final approval of a significant modification to the permit to incorporate the change in the permit.

[45CSR§30-5.8.c.]

2.11.4. "Section 502(b)(10) changes" are changes that contravene an express permit term. Such changes do not include changes that would violate applicable requirements or contravene enforceable permit terms and conditions that are monitoring (including test methods), recordkeeping, reporting, or compliance certification requirements.
[45CSR§30-2.39]

2.12. Reasonably Anticipated Operating Scenarios

2.12.1. The following are terms and conditions for reasonably anticipated operating scenarios identified in this permit.

a. Contemporaneously with making a change from one operating scenario to another, the permittee shall record in a log at the permitted facility a record of the scenario under which it is operating and to document the change in reports submitted pursuant to the terms of this permit and 45CSR30.

b. The permit shield shall extend to all terms and conditions under each such operating scenario; and

c. The terms and conditions of each such alternative scenario shall meet all applicable requirements and the requirements of 45CSR30.

[45CSR§30-5.1.i.]

2.13. Duty to Comply

2.13.1. The permittee must comply with all conditions of this permit. Any permit noncompliance constitutes a violation of the West Virginia Code and the Clean Air Act and is grounds for enforcement action by the Secretary or USEPA; for permit termination, revocation and reissuance, or modification; or for denial of a permit renewal application.
[45CSR§30-5.1.f.1.]

2.14. Inspection and Entry

2.14.1. The permittee shall allow any authorized representative of the Secretary, upon the presentation of credentials and other documents as may be required by law, to perform the following:

a. At all reasonable times (including all times in which the facility is in operation) enter upon the permittee's premises where a source is located or emissions related activity is conducted, or where records must be kept under the conditions of this permit;

b. Have access to and copy, at reasonable times, any records that must be kept under the conditions of this permit;

c. Inspect at reasonable times (including all times in which the facility is in operation) any facilities, equipment (including monitoring and air pollution control equipment), practices, or operations regulated or required under the permit;

d. Sample or monitor at reasonable times substances or parameters to determine compliance with the permit or applicable requirements or ascertain the amounts and types of air pollutants discharged.

[45CSR§30-5.3.b.]

2.15. Schedule of Compliance

2.15.1. For sources subject to a compliance schedule, certified progress reports shall be submitted consistent with the applicable schedule of compliance set forth in this permit and 45CSR§30-4.3.h., but at least every six (6) months, and no greater than once a month, and shall include the following:

a. Dates for achieving the activities, milestones, or compliance required in the schedule of compliance, and dates when such activities, milestones or compliance were achieved; and

b. An explanation of why any dates in the schedule of compliance were not or will not be met, and any preventative or corrective measure adopted.

[45CSR§30-5.3.d.]

2.16. Need to Halt or Reduce Activity not a Defense

2.16.1. It shall not be a defense for a permittee in an enforcement action that it would have been necessary to halt or reduce the permitted activity in order to maintain compliance with the conditions of this permit. However, nothing in this paragraph shall be construed as precluding consideration of a need to halt or reduce activity as a mitigating factor in determining penalties for noncompliance if the health, safety, or environmental impacts of halting or reducing operations would be more serious than the impacts of continued operations.
[45CSR§30-5.1.f.2.]

2.17. Emergency

2.17.1. An "emergency" means any situation arising from sudden and reasonably unforeseeable events beyond the control of the source, including acts of God, which situation requires immediate corrective action to restore normal operation, and that causes the source to exceed a technology-based emission limitation under the permit, due to unavoidable increases in emissions attributable to the emergency. An emergency shall not include noncompliance to the extent caused by improperly designed equipment, lack of preventative maintenance, careless or improper operation, or operator error.
[45CSR§30-5.7.a.]

2.17.2. Effect of any emergency. An emergency constitutes an affirmative defense to an action brought for noncompliance with such technology-based emission limitations if the conditions of 45CSR§30-5.7.c. are met.
[45CSR§30-5.7.b.]

2.17.3. The affirmative defense of emergency shall be demonstrated through properly signed, contemporaneous operating logs, or other relevant evidence that:

a. An emergency occurred and that the permittee can identify the cause(s) of the emergency;

b. The permitted facility was at the time being properly operated;

c. During the period of the emergency the permittee took all reasonable steps to minimize levels of emissions that exceeded the emission standards, or other requirements in the permit; and

d. Subject to the requirements of 45CSR§30-5.1.c.3.C.1, the permittee submitted notice of the emergency to the Secretary within one (1) working day of the time when emission limitations were exceeded due to the emergency and made a request for variance, and as applicable rules provide. This notice, report, and variance request fulfills the requirement of 45CSR§30-5.1.c.3.B. This notice must contain a detailed description of the emergency, any steps taken to mitigate emissions, and corrective actions taken.

[45CSR§30-5.7.c.]

2.17.4. In any enforcement proceeding, the permittee seeking to establish the occurrence of an emergency has the burden of proof.
[45CSR§30-5.7.d.]

2.17.5. This provision is in addition to any emergency or upset provision contained in any applicable requirement.
[45CSR§30-5.7.e.]

2.18. Federally-Enforceable Requirements

2.18.1. All terms and conditions in this permit, including any provisions designed to limit a source's potential to emit and excepting those provisions that are specifically designated in the permit as "State-enforceable only", are enforceable by the Secretary, USEPA, and citizens under the Clean Air Act.
[45CSR§30-5.2.a.]

2.18.2. Those provisions specifically designated in the permit as “State-enforceable only” shall become “Federally-enforceable” requirements upon SIP approval by the USEPA.

2.19. Duty to Provide Information

2.19.1. The permittee shall furnish to the Secretary within a reasonable time any information the Secretary may request in writing to determine whether cause exists for modifying, revoking and reissuing, or terminating the permit or to determine compliance with the permit. Upon request, the permittee shall also furnish to the Secretary copies of records required to be kept by the permittee. For information claimed to be confidential, the permittee shall furnish such records to the Secretary along with a claim of confidentiality in accordance with 45CSR31. If confidential information is to be sent to USEPA, the permittee shall directly provide such information to USEPA along with a claim of confidentiality in accordance with 40 C.F.R. Part 2.
[45CSR§30-5.1.f.5.]

2.20. Duty to Supplement and Correct Information

2.20.1. Upon becoming aware of a failure to submit any relevant facts or a submittal of incorrect information in any permit application, the permittee shall promptly submit to the Secretary such supplemental facts or corrected information.
[45CSR§30-4.2.]

2.21. Permit Shield

2.21.1. Compliance with the conditions of this permit shall be deemed compliance with any applicable requirements as of the date of permit issuance provided that such applicable requirements are included and are specifically identified in this permit or the Secretary has determined that other requirements specifically identified are not applicable to the source and this permit includes such a determination or a concise summary thereof.
[45CSR§30-5.6.a.]

2.21.2. Nothing in this permit shall alter or affect the following:

a. The liability of an owner or operator of a source for any violation of applicable requirements prior to or at the time of permit issuance; or

b. The applicable requirements of the Code of West Virginia and Title IV of the Clean Air Act (Acid Deposition Control), consistent with § 408 (a) of the Clean Air Act.

c. The authority of the Administrator of U.S. EPA to require information under § 114 of the Clean Air Act or to issue emergency orders under § 303 of the Clean Air Act.

[45CSR§30-5.6.c.]

2.22. Credible Evidence

2.22.1. Nothing in this permit shall alter or affect the ability of any person to establish compliance with, or a violation of, any applicable requirement through the use of credible evidence to the extent authorized by law. Nothing in this permit shall be construed to waive any defenses otherwise available to the permittee including but not limited to any challenge to the credible evidence rule in the context of any future proceeding.
[45CSR§30-5.3.e.3.B. and 45CSR38]

2.23. Severability

2.23.1. The provisions of this permit are severable. If any provision of this permit, or the application of any provision of this permit to any circumstance is held invalid by a court of competent jurisdiction, the remaining permit terms and conditions or their application to other circumstances shall remain in full force and effect.
[45CSR§30-5.1.e.]

2.24. Property Rights

2.24.1. This permit does not convey any property rights of any sort or any exclusive privilege.
[45CSR§30-5.1.f.4]

2.25. Acid Deposition Control

2.25.1. Emissions shall not exceed any allowances that the source lawfully holds under Title IV of the Clean Air Act (Acid Deposition Control) or rules of the Secretary promulgated thereunder.

a. No permit revision shall be required for increases in emissions that are authorized by allowances acquired pursuant to the acid deposition control program, provided that such increases do not require a permit revision under any other applicable requirement.

b. No limit shall be placed on the number of allowances held by the source. The source may not, however, use allowances as a defense to noncompliance with any other applicable requirement.

c. Any such allowance shall be accounted for according to the procedures established in rules promulgated under Title IV of the Clean Air Act.

[45CSR§30-5.1.d.]

2.25.2. Where applicable requirements of the Clean Air Act are more stringent than any applicable requirement of regulations promulgated under Title IV of the Clean Air Act (Acid Deposition Control), both provisions shall be incorporated into the permit and shall be enforceable by the Secretary and U. S. EPA.
[45CSR§30-5.1.a.2.]

3.0 Facility-Wide Requirements

3.1. Limitations and Standards

3.1.1. **Open burning.** The open burning of refuse by any person is prohibited except as noted in 45CSR§6-3.1. **[45CSR§6-3.1.]**

3.1.2. **Open burning exemptions.** The exemptions listed in 45CSR§6-3.1 are subject to the following stipulation: Upon notification by the Secretary, no person shall cause or allow any form of open burning during existing or predicted periods of atmospheric stagnation. Notification shall be made by such means as the Secretary may deem necessary and feasible.
[45CSR§6-3.2.]

3.1.3. **Asbestos.** The permittee is responsible for thoroughly inspecting the facility, or part of the facility, prior to commencement of demolition or renovation for the presence of asbestos and complying with 40 C.F.R. § 61.145, 40 C.F.R. § 61.148, and 40 C.F.R. § 61.150. The permittee, owner, or operator must notify the Secretary at least ten (10) working days prior to the commencement of any asbestos removal on the forms prescribed by the Secretary if the permittee is subject to the notification requirements of 40 C.F.R. § 61.145(b)(3)(i). The USEPA, the Division of Waste Management and the Bureau for Public Health - Environmental Health requires a copy of this notice to be sent to them.
[40 C.F.R. §61.145(b) and 45CSR34]

3.1.4. **Odor.** No person shall cause, suffer, allow or permit the discharge of air pollutants which cause or contribute to an objectionable odor at any location occupied by the public.
[45CSR§4-3.1 State-Enforceable only.]

3.1.5. **Standby plan for reducing emissions.** When requested by the Secretary, the permittee shall prepare standby plans for reducing the emissions of air pollutants in accordance with the objectives set forth in Tables I, II, and III of 45CSR11.
[45CSR§11-5.2]

3.1.6. **Emission inventory.** The permittee is responsible for submitting, on an annual basis, an emission inventory in accordance with the submittal requirements of the Division of Air Quality.
[W.Va. Code § 22-5-4(a)(14)]

3.1.7. **Ozone-depleting substances.** For those facilities performing maintenance, service, repair or disposal of appliances, the permittee shall comply with the standards for recycling and emissions reduction pursuant to 40 C.F.R. Part 82, Subpart F, except as provided for Motor Vehicle Air Conditioners (MVACs) in Subpart B:

a. Persons opening appliances for maintenance, service, repair, or disposal must comply with the prohibitions and required practices pursuant to 40 C.F.R. §§ 82.154 and 82.156.

b. Equipment used during the maintenance, service, repair, or disposal of appliances must comply with the standards for recycling and recovery equipment pursuant to 40 C.F.R. § 82.158.

c. Persons performing maintenance, service, repair, or disposal of appliances must be certified by an approved technician certification program pursuant to 40 C.F.R. § 82.161.

[40 C.F.R. 82, Subpart F]

3.1.8. **Risk Management Plan.** Should this stationary source, as defined in 40 C.F.R. § 68.3, become subject to Part 68, then the owner or operator shall submit a risk management plan (RMP) by the date specified in 40 C.F.R. § 68.10 and shall certify compliance with the requirements of Part 68 as part of the annual compliance certification as required by 40 C.F.R. Part 70 or 71.
[40 C.F.R. 68]

3.1.9. No person shall cause, suffer, allow or permit fugitive particulate matter to be discharged beyond the boundary lines of the property on which the discharge originates or at any public or residential location, which causes or contributes to statutory air pollution.
[45CSR§17-3.1; State Enforceable Only]

3.2. Monitoring Requirements

3.2.1. Reserved

3.3. Testing Requirements

3.3.1. **Stack testing.** As per provisions set forth in this permit or as otherwise required by the Secretary, in accordance with the West Virginia Code, underlying regulations, permits and orders, the permittee shall conduct test(s) to determine compliance with the emission limitations set forth in this permit and/or established or set forth in underlying documents. The Secretary, or his duly authorized representative, may at his option witness or conduct such test(s). Should the Secretary exercise his option to conduct such test(s), the operator shall provide all necessary sampling connections and sampling ports to be located in such manner as the Secretary may require, power for test equipment and the required safety equipment, such as scaffolding, railings and ladders, to comply with generally accepted good safety practices. Such tests shall be conducted in accordance with the methods and procedures set forth in this permit or as otherwise approved or specified by the Secretary in accordance with the following:

a. The Secretary may on a source-specific basis approve or specify additional testing or alternative testing to the test methods specified in the permit for demonstrating compliance with 40 C.F.R. Parts 60, 61, and 63, if applicable, in accordance with the Secretary's delegated authority and any established equivalency determination methods which are applicable.

b. The Secretary may on a source-specific basis approve or specify additional testing or alternative testing to the test methods specified in the permit for demonstrating compliance with applicable requirements which do not involve federal delegation. In specifying or approving such alternative testing to the test methods, the Secretary, to the extent possible, shall utilize the same equivalency criteria as would be used in approving such changes under Section 3.3.1.a. of this permit.

c. All periodic tests to determine mass emission limits from or air pollutant concentrations in discharge stacks and such other tests as specified in this permit shall be conducted in accordance with an approved test protocol. Unless previously approved, such protocols shall be submitted to the Secretary in writing at least thirty (30) days prior to any testing and shall contain the

information set forth by the Secretary. In addition, the permittee shall notify the Secretary at least fifteen (15) days prior to any testing so the Secretary may have the opportunity to observe such tests. This notification shall include the actual date and time during which the test will be conducted and, if appropriate, verification that the tests will fully conform to a referenced protocol previously approved by the Secretary.

d. The permittee shall submit a report of the results of the stack test within 60 days of completion of the test. The test report shall provide the information necessary to document the objectives of the test and to determine whether proper procedures were used to accomplish these objectives. The report shall include the following: the certification described in paragraph 3.5.1; a statement of compliance status, also signed by a responsible official; and, a summary of conditions which form the basis for the compliance status evaluation. The summary of conditions shall include the following:

1. The permit or rule evaluated, with the citation number and language.

2. The result of the test for each permit or rule condition.

3. A statement of compliance or non-compliance with each permit or rule condition.

[WV Code §§ 22-5-4(a)(14-15) and 45CSR13]

3.4. Recordkeeping Requirements

3.4.1. **Monitoring information.** The permittee shall keep records of monitoring information that include the following:

a. The date, place as defined in this permit and time of sampling or measurements;

b. The date(s) analyses were performed;

c. The company or entity that performed the analyses;

d. The analytical techniques or methods used;

e. The results of the analyses; and

f. The operating conditions existing at the time of sampling or measurement.

[45CSR§30-5.1.c.2.A.]

3.4.2. **Retention of records.** The permittee shall retain records of all required monitoring data and support information for a period of at least five (5) years from the date of monitoring sample, measurement, report, application, or record creation date. Support information includes all calibration and maintenance records and all original strip-chart recordings for continuous monitoring instrumentation, and copies of all reports required by the permit. Where appropriate, records may be maintained in computerized form in lieu of the above records.
[45CSR§30-5.1.c.2.B.]

3.4.3. **Odors.** For the purposes of 45CSR4, the permittee shall maintain a record of all odor complaints received, any investigation performed in response to such a complaint, and any responsive action(s) taken.
[45CSR§30-5.1.c. State-Enforceable only.]

3.5. Reporting Requirements

3.5.1. **Responsible official.** Any application form, report, or compliance certification required by this permit to be submitted to the DAQ and/or USEPA shall contain a certification by the responsible official that states that, based on information and belief formed after reasonable inquiry, the statements and information in the document are true, accurate and complete.
[45CSR§§30-4.4. *and* 5.1.c.3.D.]

3.5.2. A permittee may request confidential treatment for the submission of reporting required under 45CSR§30-5.1.c.3. pursuant to the limitations and procedures of W.Va. Code § 22-5-10 and 45CSR31.
[45CSR§30-5.1.c.3.E.]

3.5.3. Except for the electronic submittal of the annual certification to the USEPA as required in 3.5.5 below, all notices, requests, demands, submissions and other communications required or permitted to be made to the Secretary of DEP and/or USEPA shall be made in writing and shall be deemed to have been duly given when delivered by hand, mailed first class or by private carrier with postage prepaid to the address(es) set forth below or to such other person or address as the Secretary of the Department of Environmental Protection may designate:

If to the DAQ:

Director
WVDEP
Division of Air Quality
601 57th Street SE
Charleston, WV 25304

Phone: 304/926-0475
FAX: 304/926-0478

If to the US EPA:

Associate Director
Office of Air Enforcement and Compliance Assistance (3AP20)
U. S. Environmental Protection Agency
Region III
1650 Arch Street
Philadelphia, PA 19103-2029

3.5.4. **Certified emissions statement.** The permittee shall submit a certified emissions statement and pay fees on an annual basis in accordance with the submittal requirements of the Division of Air Quality.
[45CSR§30-8.]

3.5.5. **Compliance certification.** The permittee shall certify compliance with the conditions of this permit on the forms provided by the DAQ. In addition to the annual compliance certification, the permittee may be required to submit certifications more frequently under an applicable requirement of this permit. The annual certification shall be submitted to the DAQ and USEPA on or before March 15 of each year, and shall certify compliance for the period ending December 31. The annual certification to the USEPA shall be submitted in electronic format only. It shall be submitted by e-mail to the following address: R3_APD_Permits@epa.gov. The permittee shall maintain a copy of the certification on site for five (5) years from submittal of the certification.
[45CSR§30-5.3.e.]

3.5.6. **Semi-annual monitoring reports.** The permittee shall submit reports of any required monitoring on or before September 15 for the reporting period January 1 to June 30 and on or before March 15 for the reporting period July 1 to December 31. All instances of deviation from permit requirements must be clearly identified in such reports. All required reports must be certified by a responsible official consistent with 45CSR§30-4.4.
[45CSR§30-5.1.c.3.A.]

3.5.7. **Emergencies.** For reporting emergency situations, refer to Section 2.17 of this permit.

3.5.8. **Deviations.**

a. In addition to monitoring reports required by this permit, the permittee shall promptly submit supplemental reports and notices in accordance with the following:

1. Any deviation resulting from an emergency or upset condition, as defined in 45CSR§30-5.7., shall be reported by telephone or telefax within one (1) working day of the date on which the permittee becomes aware of the deviation, if the permittee desires to assert the affirmative defense in accordance with 45CSR§30-5.7. A written report of such deviation, which shall include the probable cause of such deviations, and any corrective actions or preventative measures taken, shall be submitted and certified by a responsible official within ten (10) days of the deviation.

2. Any deviation that poses an imminent and substantial danger to public health, safety, or the environment shall be reported to the Secretary immediately by telephone or telefax. A written report of such deviation, which shall include the probable cause of such deviation, and any corrective actions or preventative measures taken, shall be submitted by the responsible official within ten (10) days of the deviation.

3. Deviations for which more frequent reporting is required under this permit shall be reported on the more frequent basis.

4. All reports of deviations shall identify the probable cause of the deviation and any corrective actions or preventative measures taken.

[45CSR§30-5.1.c.3.C.]

b. The permittee shall, in the reporting of deviations from permit requirements, including those attributable to upset conditions as defined in this permit, report the probable cause of such deviations and any corrective actions or preventive measures taken in accordance with any rules of the Secretary.
[45CSR§30-5.1.c.3.B.]

3.5.9. **New applicable requirements.** If any applicable requirement is promulgated during the term of this permit, the permittee will meet such requirements on a timely basis, or in accordance with a more detailed schedule if required by the applicable requirement.
[45CSR§30-4.3.h.1.B.]

3.6. Compliance Plan

3.6.1. None

3.7. Permit Shield

3.7.1. The permittee is hereby granted a permit shield in accordance with 45CSR§30-5.6. The permit shield applies provided the permittee operates in accordance with the information contained within this permit.

3.7.2. The following requirements specifically identified are not applicable to the source based on the determinations set forth below. The permit shield shall apply to the following requirements provided the conditions of the determinations are met.

45CSR4	*To Prevent and Control the Discharge of Air Pollutants into the Open Air Which Cause or Contributes to an Objectionable Odor or Odors:* This State Rule shall not apply to the following source of objectionable odor until such time as feasible control methods are developed: Internal combustion engines.
45CSR21	*To Prevent and Control Air Pollution from the Emission of Volatile Organic Compounds:* All storage tanks at the station, which are listed as insignificant sources, are below 40,000 gallons in capacity, which exempts the facility from 45CSR§21-28. The station is not engaged in the extraction or fractionation of natural gas, which exempts the facility from 45CSR§21-29.
45CSR27	*To Prevent and Control the Emissions of Toxic Air Pollutants:* Natural gas is included as a petroleum product and contains less than 5% benzene by weight. 45CSR§27-2.4 exempts equipment "used in the production and distribution of petroleum products providing that such equipment does not produce or contact materials containing more than 5% benzene by weight."
40 C.F.R. Part 60 Subpart JJJJ	Standards of Performance for Stationary Spark Ignition (SI) Internal Combustion Engines. All SI engines located at this site were installed before July 12, 2006. Thus, these engines are not subject to 40 C.F.R. Part 60 Subpart JJJJ. [40CFR§60.4230(a)(4)]
40 C.F.R. Part 60 Subpart OOOO	Standards of Performance for Crude Oil and Natural Gas Production, Transmission, and Distribution for which Construction, Modification, or Reconstruction Commenced after August 23, 2011 and on or before September 18, 2015. The Storage Vessel requirement defined for transmission sources is not applicable to this site because all vessels were constructed, commenced construction, prior to August 23, 2011 accordance with [40CFR§60.5365(e)]
40 C.F.R. Part 60 Subpart OOOOa	Standards of Performance for Crude Oil and Natural Facilities for which Construction, Modification, or Reconstruction Commenced after September 18, 2015. The GHG and VOC requirements defined by this NSPS are not applicable to this site because all affected sources commenced constructed prior to September 18, 2015 in accordance with [40CFR§60.5365a]
40 C.F.R. Part 60 Subpart Dc	Standards of Performance for Steam Generating Units: The heating system boiler and line heater at this facility is less than 10 MMBtu/hr design heat capacity, which is below the applicability criteria stated in [40CFR60.40c(a)].

40 C.F.R. Part 60 Subpart K and Ka	Standards of Performance for Petroleum Liquid Storage Vessels. All tanks at the station are below the applicability criteria of 40,000 gallons in capacity as stated in [40CFR60.110a(a)]
40 C.F.R. Part 60 Subpart Kb	Standards of Performance for Petroleum Liquid Storage Vessels. All tanks at the station are below the applicability criteria of 19,813 gallons in capacity as stated in [40CFR60.110b(a)]
40 C.F.R. Part 60 Subpart KKK	Standards of Performance for Equipment Leaks of VOC From Onshore Natural Gas Processing Plant(s). The station is not engaged in the extraction or fractionation of natural gas liquids from field gas, the fractionation of mixed natural gas liquids from field gas, the fractionation of mixed natural gas liquids to natural gas products, or both. As a result, the station has no affected sources operating within this source category.
40 C.F.R. Part 63 Subpart HHH	National Emission Standards for Hazardous Air Pollutants From Natural Gas Transmission and Storage Facilities. The station is not subject to Subpart HHH since there are no affected dehydration units utilized at this site. Additionally the site is a minor HAP source.
40 C.F.R. Part 64 CAM	The compliance assurance monitoring provisions of Part 64 are not applicable due there being no add-on controls at this facility. [40CFR§64.2(a)(2)]

3.8. Emergency Operating Scenario

For emergency situations which interrupt the critical supply of natural gas to the public, and which pose a life threatening circumstance to the customer, the permittee is allowed to temporarily replace failed engine(s) as long as all of the following conditions are met:

a. The replacement engine(s) is only allowed to operate until repair of the failed engine(s) is complete, but under no circumstance may the replacement engine(s) operate in excess of sixty (60) days;

b. Both the replacement engine(s) and the repaired failed engine(s) shall not operate at the same time with the exception of any necessary testing of the repaired engine(s) and this testing may not exceed five (5) hours;

c. Potential hourly emissions from the replacement engine(s) are less than or equal to the potential hourly emissions from the engine(s) being replaced;

d. Credible performance emission test data verifying the emission rates associated with the operation of the substitute engine shall be submitted to the Director within five (5) days;

e. The permittee must provide written notification to the Director within five (5) days of the replacement. This notification must contain:

   i. Information to support the claim of life threatening circumstances to justify applicability of this emergency provision;
   ii. Identification of the engine(s) being temporarily replaced;
   iii. The design parameters of the replacement engine(s) including, but not limited to, the design horsepower and emission factors;
   iv. Projected duration of the replacement engine(s); and
   v. The appropriate certification by a responsible official.

[45CSR§30-12.7]

4.0 Miscellaneous Indirect Natural Gas Heaters and Boilers less than 10 MMBtu/hr [Emission Unit IDs (BLR2)]

4.1. Limitations and Standards

4.1.1. No person shall cause, suffer, allow or permit emission of smoke and/or particulate matter into the open air from any fuel burning unit which is greater than ten (10) percent opacity based on a six minute block average.
[45CSR§2-3.1.]

4.1.2. Compliance with the visible emission requirements of 45CSR§2-3.1 (Section 4.1.1 of this permit) shall be determined in accordance with 40 C.F.R. Part 60, Appendix A, Method 9 or by using measurements from continuous opacity monitoring systems approved by the Director. The Director may require the installation, calibration, maintenance and operation of continuous opacity monitoring systems and may establish policies for the evaluation of continuous opacity monitoring results and the determination of compliance with the visible emission requirements of 45CSR§2-3.1 (Section 4.1.1 of this permit). Continuous opacity monitors shall not be required on fuel burning units which employ wet scrubbing systems for emission control.
[45CSR§2-3.2.]

4.2. Monitoring Requirements

4.2.1. At such reasonable times as the Secretary may designate, the permittee shall conduct visible emissions observations using Method 22 for the purpose of demonstrating compliance with Section 4.1.1. If visible emissions are observed, the permittee shall conduct a Method 9 reading unless the cause for visible emissions is corrected within 24 hours. Records of observation will be kept for at least 5 years from the date of observation.
[45CSR§30-5.1.c.]

4.3. Testing Requirements

4.3.1. N/A

4.4. Recordkeeping Requirements

4.4.1. N/A

4.5. Reporting Requirements

4.5.1. N/A

5.0 40 C.F.R. 63, Subpart ZZZZ GACT Requirements for 2SLB Reciprocating Internal Combustion Engine(s) RICE, [Emission Unit ID: (01801)]

5.1 Limitations and Standards

5.1.1. As stated in 40 C.F.R. §§63.6603, the permittee must comply with the following requirements from Table 2d for existing stationary RICE located at area sources of HAP emissions:

For each . . .	The permittee must meet the following requirements, except during periods of startup . . .
Emergency stationary SI RICE and black start stationary SI RICE	Change oil and filter every 4,320 hours of operation or annually, whichever comes first;[2]
	Inspect spark plugs every 4,320 hours of operation or annually, whichever comes first; and
	Inspect all hoses and belts every 4,320 hours of operation or annually, whichever comes first, and replace as necessary.[3]

[2] Sources have the option to utilize an oil analysis program as described in 40 C.F.R. §63.6625(i) or (j) in order to extend the specified oil change requirement in Table 2d of this subpart.
[3] Sources can petition the Administrator pursuant to the requirements of 40 CFR 63.6(g) for alternative work practices.

[40 C.F.R. 63.6603 and Table 2d, Item 6]

5.1.2. The permittee must comply with the applicable operating limitations in this section no later than October 19, 2013.
[40 C.F.R. §63.6595(a)]

5.1.3. The permittee shall comply with the following general requirements:

a. The permittee must be in compliance with the operating limitations in this subpart that apply to the permittee at all times.

b. At all times the permittee must operate and maintain any affected source, including associated air pollution control equipment and monitoring equipment, in a manner consistent with safety and good air pollution control practices for minimizing emissions. The general duty to minimize emissions does not require the permittee to make any further efforts to reduce emissions if required levels have been achieved. Determination of whether such operation and maintenance procedures are being used will be based on information available to the Administrator which may include, but is not limited to, monitoring results, review of operation and maintenance procedures, review of operation and maintenance records, and inspection of the source.

[40 C.F.R. § 63.6605]

5.1.4. The permittee shall demonstrate continuous compliance by doing the following:

a. The permittee must demonstrate continuous compliance with each emission limitation and operating limitation in Table 2d to 40 C.F.R. 63, Subpart ZZZZ that apply to the permittee according to methods specified in Table 6 to 40 C.F.R. 63, Subpart ZZZZ.

Table 6 states that for work or management practices the permittee shall operate and maintain the stationary RICE according to the manufacturer's emission related operation and maintenance instructions; or develop and follow your own maintenance plan which must provide to the extent

practicable for the maintenance and operation of the engine in a manner consistent with good air pollution control practice for minimizing emissions.

[40 C.F.R. § 63.6640(a)]

5.1.5. The permittee shall comply with all applicable General Provisions according to Table 8 to 40 C.F.R., Part 63, Subpart ZZZZ.
[40 C.F.R. § 63.6665]

5.2. Monitoring Requirements

5.2.1. This facility is subject to the following requirements:

a. The permittee must operate and maintain the stationary RICE and after-treatment control device (if any) according to the manufacturer's emission-related written instructions or develop your own maintenance plan which must provide to the extent practicable for the maintenance and operation of the engine in a manner consistent with good air pollution control practice for minimizing emissions.
[40 C.F.R. §63.6625(e)(5)]

b. If you operate a new, reconstructed, or existing stationary engine, you must minimize the engine's time spent at idle during startup and minimize the engine's startup time to a period needed for appropriate and safe loading of the engine, not to exceed 30 minutes, after which time the emission standards applicable to all times other than startup in Tables 1a, 2a, 2c, and 2d to this subpart apply.
[40 C.F.R. §63.6625(h)]

d. If you own or operate a stationary SI engine that is subject to the work, operation or management practices in items 6, 7, or 8 of Table 2c to this subpart or in items 5, 6, 7, 9, or 11 of Table 2d to this subpart, you have the option of utilizing an oil analysis program in order to extend the specified oil change requirement in Tables 2c and 2d to this subpart. The oil analysis must be performed at the same frequency specified for changing the oil in Table 2c or 2d to this subpart. The analysis program must at a minimum analyze the following three parameters: Total Acid Number, viscosity, and percent water content. The condemning limits for these parameters are as follows: Total Acid Number increases by more than 3.0 milligrams of potassium hydroxide (KOH) per gram from Total Acid Number of the oil when new; viscosity of the oil has changed by more than 20 percent from the viscosity of the oil when new; or percent water content (by volume) is greater than 0.5. If all of these condemning limits are not exceeded, the engine owner or operator is not required to change the oil. If any of the limits are exceeded, the engine owner or operator must change the oil within 2 days of receiving the results of the analysis; if the engine is not in operation when the results of the analysis are received, the engine owner or operator must change the oil within 2 days or before commencing operation, whichever is later. The owner or operator must keep records of the parameters that are analyzed as part of the program, the results of the analysis, and the oil changes for the engine. The analysis program must be part of the maintenance plan for the engine.
[40 C.F.R. §63.6625(j)]

[40 C.F.R. § 63.6625]

5.3. Testing Requirements

5.3.1. NA

5.4. Recordkeeping Requirements

5.4.1. The permittee shall keep the records required in Table 6 (Item 9) of this subpart to show continuous compliance with each emission or operating limitation that applied.
[40 CFR §63.6655(d)]

5.4.2. The permittee must keep records of the maintenance conducted on each stationary RICE in order to demonstrate that the permittee operated and maintained each stationary RICE and after-treatment control device (if any) according to the permittee's own maintenance plan.
[40 CFR §63.6655(e)(3)]

5.5. Reporting Requirements

5.5.1. N/A

5.6. Compliance Plan

5.6.1 N/A

6.0 40 C.F.R. 63, Subpart ZZZZ GACT Requirements for Emergency Reciprocating Internal Combustion Engine(s) RICE [Emission Unit IDs: (018G1)]

6.1 Limitations and Standards

6.1.1. As stated in 40 C.F.R. §§63.6603, the permittee must comply with the following requirements from Table 2d for existing stationary RICE located at area sources of HAP emissions:

For each . . .	The permittee must meet the following requirements, except during periods of startup . . .
Emergency stationary SI RICE and black start stationary SI RICE	Change oil and filter every 500 hours of operation or annually, whichever comes first;[2]
	Inspect spark plugs every 1,000 hours of operation or annually, whichever comes first; and
	Inspect all hoses and belts every 500 hours of operation or annually, whichever comes first, and replace as necessary.3

[2] Sources have the option to utilize an oil analysis program as described in 40 C.F.R. §63.6625(i) or (j) in order to extend the specified oil change requirement in Table 2c of this subpart.
[3] Sources can petition the Administrator pursuant to the requirements of 40 CFR 63.6(g) for alternative work practices.

[40 C.F.R. 63.6603, and Table 2d, Item 5]

6.1.2. The permittee must comply with the applicable operating limitations in this section no later than October 19, 2013.
[40 C.F.R.§63.6595(a)]

6.1.3. The permittee shall comply with the following general requirements:

a. The permittee must be in compliance with the operating limitations in this subpart that apply to the permittee at all times.

b. At all times the permittee must operate and maintain any affected source, including associated air pollution control equipment and monitoring equipment, in a manner consistent with safety and good air pollution control practices for minimizing emissions. The general duty to minimize emissions does not require the permittee to make any further efforts to reduce emissions if required levels have been achieved. Determination of whether such operation and maintenance procedures are being used will be based on information available to the Administrator which may include, but is not limited to, monitoring results, review of operation and maintenance procedures, review of operation and maintenance records, and inspection of the source.

[40 C.F.R. § 63.6605]

6.1.4. The permittee shall demonstrate continuous compliance by doing the following:

a. The permittee must demonstrate continuous compliance with each emission limitation and operating limitation in Table 2d to 40 C.F.R. 63, Subpart ZZZZ that apply to the permittee according to methods specified in Table 6 to 40 C.F.R. 63, Subpart ZZZZ.

Table 6 states that for work or management practices the permittee shall operate and maintain the stationary RICE according to the manufacturer's emission related operation and maintenance

instructions; or develop and follow your own maintenance plan which must provide to the extent practicable for the maintenance and operation of the engine in a manner consistent with good air pollution control practice for minimizing emissions.

[40 C.F.R. § 63.6640(a)]

6.1.5. If you own or operate an emergency stationary RICE, you must operate the emergency stationary RICE according to the requirements in paragraphs (f)(1) through (4) of this section. In order for the engine to be considered an emergency stationary RICE under this subpart, any operation other than emergency operation, maintenance and testing, emergency demand response, and operation in non-emergency situations for 50 hours per year, as described in paragraphs (f)(1) through (4) of this section, is prohibited. If you do not operate the engine according to the requirements in paragraphs (f)(1) through (4) of this section, the engine will not be considered an emergency engine under this subpart and must meet all requirements for non-emergency engines.

(1) There is no time limit on the use of emergency stationary RICE in emergency situations.

(2) You may operate your emergency stationary RICE for any combination of the purposes specified in paragraphs (f)(2)(i) through (iii) of this section for a maximum of 100 hours per calendar year. Any operation for non-emergency situations as allowed by paragraphs (f)(3) and (4) of this section counts as part of the 100 hours per calendar year allowed by this paragraph (f)(2).

(i) Emergency stationary RICE may be operated for maintenance checks and readiness testing, provided that the tests are recommended by federal, state or local government, the manufacturer, the vendor, the regional transmission organization or equivalent balancing authority and transmission operator, or the insurance company associated with the engine. The owner or operator may petition the Administrator for approval of additional hours to be used for maintenance checks and readiness testing, but a petition is not required if the owner or operator maintains records indicating that federal, state, or local standards require maintenance and testing of emergency RICE beyond 100 hours per calendar year.

(ii) Emergency stationary RICE may be operated for emergency demand response for periods in which the Reliability Coordinator under the North American Electric Reliability Corporation (NERC) Reliability Standard EOP-002-3, Capacity and Energy Emergencies (incorporated by reference, see §63.14), or other authorized entity as determined by the Reliability Coordinator, has declared an Energy Emergency Alert Level 2 as defined in the NERC Reliability Standard EOP-002-3.

(iii) Emergency stationary RICE may be operated for periods where there is a deviation of voltage or frequency of 5 percent or greater below standard voltage or frequency.

(3) Emergency stationary RICE located at major sources of HAP may be operated for up to 50 hours per calendar year in non-emergency situations. The 50 hours of operation in non-emergency situations are counted as part of the 100 hours per calendar year for maintenance and testing and emergency demand response provided in paragraph (f)(2) of this section. The 50 hours per year for non-emergency situations cannot be used for peak shaving or non-emergency demand response, or to generate income for a facility to supply power to an electric grid or otherwise supply power as part of a financial arrangement with another entity.

[40 C.F.R. § 63.6640(f)]

6.1.5. The permittee shall comply with all General Provisions which apply according to Table 8 to 40 C.F.R., Part 63, Subpart ZZZZ.
[40 C.F.R. § 63.6665]

6.2. Monitoring Requirements

6.2.1. This facility is subject to the following requirements:

a. The permittee must operate and maintain the stationary RICE and after-treatment control device (if any) according to the manufacturer's emission-related written instructions or develop your own maintenance plan which must provide to the extent practicable for the maintenance and operation of the engine in a manner consistent with good air pollution control practice for minimizing emissions.
[40 C.F.R. §63.6625(e)(3)]

b. If you own or operate an existing emergency stationary RICE with a site rating of less than or equal to 500 brake HP located at a major source of HAP emissions or an existing emergency stationary RICE located at an area source of HAP emissions, you must install a non-resettable hour meter if one is not already installed.
[40 C.F.R. §63.6625(f)]

c. If you operate a new, reconstructed, or existing stationary engine, you must minimize the engine's time spent at idle during startup and minimize the engine's startup time to a period needed for appropriate and safe loading of the engine, not to exceed 30 minutes, after which time the emission standards applicable to all times other than startup in Tables 1a, 2a, 2c, and 2d to this subpart apply.
[40 C.F.R. §63.6625(h)]

d. If you own or operate a stationary SI engine that is subject to the work, operation or management practices in items 6, 7, or 8 of Table 2c to this subpart or in items 5, 6, 7, 9, or 11 of Table 2d to this subpart, you have the option of utilizing an oil analysis program in order to extend the specified oil change requirement in Tables 2c and 2d to this subpart. The oil analysis must be performed at the same frequency specified for changing the oil in Table 2c or 2d to this subpart. The analysis program must at a minimum analyze the following three parameters: Total Acid Number, viscosity, and percent water content. The condemning limits for these parameters are as follows: Total Acid Number increases by more than 3.0 milligrams of potassium hydroxide (KOH) per gram from Total Acid Number of the oil when new; viscosity of the oil has changed by more than 20 percent from the viscosity of the oil when new; or percent water content (by volume) is greater than 0.5. If all of these condemning limits are not exceeded, the engine owner or operator is not required to change the oil. If any of the limits are exceeded, the engine owner or operator must change the oil within 2 days of receiving the results of the analysis; if the engine is not in operation when the results of the analysis are received, the engine owner or operator must change the oil within 2 days or before commencing operation, whichever is later. The owner or operator must keep records of the parameters that are analyzed as part of the program, the results of the analysis, and the oil changes for the engine. The analysis program must be part of the maintenance plan for the engine.

[40 C.F.R. § 63.6625 (j)]

6.3. Testing Requirements

6.3.1. Reserved

6.4. Recordkeeping Requirements

6.4.1. The permittee shall keep the records required in Table 6 of this subpart to show continuous compliance with each emission or operating limitation that applied.
[40 CFR §63.6655(d), Table 6 (Item 9)]

6.4.2. The permittee must keep records of the maintenance conducted on each stationary RICE in order to demonstrate that the permittee operated and maintained each stationary RICE and after-treatment control device (if any) according to the permittee's own maintenance plan.
[40 CFR §63.6655(e)(2)]

6.4.3. If you own or operate any of the stationary RICE in paragraphs (f)(1) through (2) of this section, you must keep records of the hours of operation of the engine that is recorded through the non-resettable hour meter. The owner or operator must document how many hours are spent for emergency operation, including what classified the operation as emergency and how many hours are spent for non-emergency operation. If the engine is used for the purposes specified in §63.6640(f)(2)(ii) or (iii) or §63.6640(f)(4)(ii), the owner or operator must keep records of the notification of the emergency situation, and the date, start time, and end time of engine operation for these purposes.

a. An existing emergency stationary RICE located at an area source of HAP emissions that does not meet the standards applicable to non-emergency engines.

[40 CFR §63.6655(f)(2)]

6.5. Reporting Requirements

6.5.1. N/A

6.6. Compliance Plan

6.6.1 N/A

APPENDIX C

ELECTRONIC SUBMITTAL

Title V Operating Permit Renewal Application

Hunt Compressor Station, Facility ID No. 039-00101
Elkview, West Virginia

Columbia Gas Transmission, LLC
1700 MacCorkle Avenue, SE
Charleston, West Virginia

June 2016