Sent via FedEx this Date

January 26, 2016

William F. Durham
Director
WV Department of Environmental Protection
Division of Air Quality
601 57th Street SE
Charleston, WV 25304

Re: Latham Pool Products, Inc. d/b/a Viking Pools–WV
DAQ Plant ID No.: 041-00045
Title V Permit Renewal Application

Dear Mr. Durham:

On behalf of Viking Pools, GaiaTech is submitting the enclosed two Title V Permit renewal applications with original signature.

This renewal application has been compiled in accordance with WVDEP Division of Air Quality instructions and each application includes the following elements:

- This cover letter;
- A table of contents;
- Renewal Title V Permit Application – General Forms;
- Area Map (Attachment A);
- Plot Plan (Attachment B);
- Process Flow Diagram (Attachment C);
- Equipment Table (Attachment D);
- Emission Unit Forms (Attachment E);
- Air Pollution Control Device Forms (Attachment G);
- Compliance Assurance Monitoring (CAM) Non-applicability Determination (Attachment H);
- Process Description (Attachment I);
- Title V Application Checklist for Administrative Completeness (Attachment J).

In addition, two CDs are enclosed, each of which contains a complete electronic copy of the application.

Note that a Schedule of Compliance form has not been included because, as certified in the General Forms, all air contaminant sources identified in this application are in compliance with all applicable requirements.

This application includes no confidential information.

As indicated in the Equipment Table form, the emission unit formerly designated as EU-02 (Finishing) is now designated as an insignificant activity. Further, activities formerly designated as EU-03 (Material Storage Area) and EU-04 (Haul Road Particulate Fugitives) are not subject to any requirements under the source's current Reg. 13 and Reg. 30 permits and should be not be included in the renewed Title V permit.

GaiaTech looks forward working closely with the DAQ in on this renewal application. If you have any questions or comments regarding these matters, please contact me directly at 312-262-4271 or via e-mail at Christopher.Blume@rpsgroup.com.

Very truly yours,

GaiaTech, Incorporated

Christopher Blume, P.E.
Vice President, Air Quality/Technical Services

Attachments: See Table of Contents

Enclosures: 2 CD/electronic copies of complete application

cc: Theresa Elliott, Viking Pools-FL (via e-mail)

VIKING POOLS-WV
TITLE V PERMIT RENEWAL APPLICATION

TABLE OF CONTENTS

Application Element	Description	Page No.
General Forms	Renewal Title V Permit Application – General Forms	4
Attachment A	Area Map	17
Attachment B	Plot Plan	19
Attachment C	Process Flow Diagram	21
Attachment D	Equipment Table	23
Attachment E	Emission Unit Forms	25
Attachment G	Air Pollution Control Device Forms	30
Attachment H	Compliance Assurance Monitoring (CAM) Non-applicability Determination	34
Attachment I	Process Description	39
Attachment J	Title V Application Checklist for Administrative Completeness	41

General Forms

WEST VIRGINIA DEPARTMENT OF ENVIRONMENTAL PROTECTION

DIVISION OF AIR QUALITY

601 57th Street SE

Charleston, WV 25304

Phone: (304) 926-0475

www.dep.wv.gov/daq

INITIAL/RENEWAL TITLE V PERMIT APPLICATION - GENERAL FORMS

Section 1: General Information

1. **Name of Applicant (As registered with the WV Secretary of State's Office):** Latham Pool Products, Inc. d/b/a Viking Pools-WV	**2. Facility Name or Location:** Jane Lew, WV
3. DAQ Plant ID No.: 041-00045	**4. Federal Employer ID No. (FEIN):** 27-1694029

5. **Permit Application Type:**

☐ Initial Permit — When did operations commence? N/A

☐ Permit Renewal — What is the expiration date of the existing permit? 07/27/2016

☒ Update to Initial/Renewal Permit Application

6. Type of Business Entity:

☒ Corporation ☐ Governmental Agency ☐ LLC
☐ Partnership ☐ Limited Partnership

7. Is the Applicant the:

☐ Owner ☐ Operator ☒ Both

If the Applicant is not both the owner and operator, please provide the name and address of the other party.

8. Number of onsite employees:

88

9. Governmental Code:

☒ Privately owned and operated; 0
☐ Federally owned and operated; 1
☐ State government owned and operated; 2
☐ County government owned and operated; 3
☐ Municipality government owned and operated; 4
☐ District government owned and operated; 5

10. Business Confidentiality Claims

Does this application include confidential information (per 45CSR31)? ☐ Yes ☒ No

If yes, identify each segment of information on each page that is submitted as confidential, and provide justification for each segment claimed confidential, including the criteria under 45CSR§31-4.1, and in accordance with the DAQ's *"PRECAUTIONARY NOTICE-CLAIMS OF CONFIDENTIALITY"* guidance.

11. Mailing Address		
Street or P.O. Box: P.O. Box 550		
City: Jane Lew	**State:** WV	**Zip: 26378**
Telephone Number: 304-884-6700	**Fax Number:** 304-884-8100	

12. Facility Location		
Street: 439 Industrial Pkwy.	**City:** Jane Lew	**County:** Lewis
UTM Easting: 552.24 km	**UTM Northing:** 4,328.08 km	**Zone:** ☒ 17 or ☐ 18
Directions: From Interstate 79, take exit 105 and proceed west on WV County Route 7 for approximately 0.5 miles. Turn left on Lewis County Industrial Park Road (County Route 78) and proceed approximately 0.5 miles to the plant site on the left.		
Portable Source? ☐ Yes ☒ No		
Is facility located within a nonattainment area? ☐ Yes ☒ No		**If yes, for what air pollutants?**
Is facility located within 50 miles of another state? ☒ Yes ☐ No		**If yes, name the affected state(s).** Pennsylvania
Is facility located within 100 km of a Class I Area[1]? ☒ Yes ☐ No **If no, do emissions impact a Class I Area[1]?** ☐ Yes ☐ No		**If yes, name the area(s).** Dolly Sods Wilderness Area Otter Creek Wilderness Area

[1] *Class I areas include Dolly Sods and Otter Creek Wilderness Areas in West Virginia, and Shenandoah National Park and James River Face Wilderness Area in Virginia.*

13. Contact Information		
Responsible Official: Thomas E. Straub		**Title:** President
Street or P.O. Box: 439 Industrial Drive		
City: Jane Lew	**State:** WV	**Zip:** 26378
Telephone Number: 304-884-6700	**Fax Number:** 304-884-8100	
E-mail address: tomstraub@lathampool.com		
Environmental Contact: Theresa Elliott		**Title:** EHS Manager – Fiberglass Division
Street or P.O. Box: 40119 CR 54 E.		
City: Zephyrhills	**State:** FL	**Zip:** 33540
Telephone Number: 813-783-7212 Ext 3314	**Fax Number:** 813-783-7214	
E-mail address: theresaelliott@lathampool.com		
Application Preparer: Christopher Blume		**Title:** Vice President
Company: RPS GaiaTech		
Street or P.O. Box: 135 S. LaSalle Street, Suite 3500		
City: Chicago	**State:** IL	**Zip:** 60603
Telephone Number: 312-262-4371	**Fax Number:** 312-541-4200	
E-mail address: Christopher.Blume@rpsgroup.com		

14. Facility Description

List all processes, products, NAICS and SIC codes for normal operation, in order of priority. Also list any process, products, NAICS and SIC codes associated with any alternative operating scenarios if different from those listed for normal operation.

Process	Products	NAICS	SIC
Fiberglass Reinforced Plastic Composites Manufacturing	Swimming Pools, Spas, and Related Products	326199	

Provide a general description of operations.
See Attachment I – Process Description

15. Provide an **Area Map** showing plant location as **ATTACHMENT A**.

16.	Provide a **Plot Plan(s)**, e.g. scaled map(s) and/or sketch(es) showing the location of the property on which the stationary source(s) is located as **ATTACHMENT B**. For instructions, refer to "Plot Plan - Guidelines."
17.	Provide a detailed **Process Flow Diagram(s)** showing each process or emissions unit as **ATTACHMENT C**. Process Flow Diagrams should show all emission units, control equipment, emission points, and their relationships.

Section 2: Applicable Requirements

18. Applicable Requirements Summary	
Instructions: Mark all applicable requirements.	
☐ SIP	☐ FIP
☒ Minor source NSR (45CSR13)	☐ PSD (45CSR14)
☒ NESHAP (45CSR34)	☐ Nonattainment NSR (45CSR19)
☐ Section 111 NSPS	☐ Section 112(d) MACT standards
☐ Section 112(g) Case-by-case MACT	☐ 112(r) RMP
☐ Section 112(i) Early reduction of HAP	☐ Consumer/commercial prod. reqts., section 183(e)
☐ Section 129 Standards/Reqts.	☐ Stratospheric ozone (Title VI)
☐ Tank vessel reqt., section 183(f)	☐ Emissions cap 45CSR§30-2.6.1
☐ NAAQS, increments or visibility (temp. sources)	☐ 45CSR27 State enforceable only rule
☐ 45CSR4 State enforceable only rule	☐ Acid Rain (Title IV, 45CSR33)
☐ Emissions Trading and Banking (45CSR28)	☐ **C**ompliance **A**ssurance **M**onitoring (40CFR64)
☐ CAIR NO_x Annual Trading Program (45CSR39)	☐ CAIR NO_x Ozone Season Trading Program (45CSR40)
☐ CAIR SO_2 Trading Program (45CSR41)	

19. Non Applicability Determinations
List all requirements which the source has determined not applicable and for which a permit shield is requested. The listing shall also include the rule citation and the reason why the shield applies. ***N/A***
☐ Permit Shield

20. Facility-Wide Applicable Requirements
List all facility-wide applicable requirements. For each applicable requirement, include the underlying rule/regulation citation and/or <u>construction permit</u> with the condition number. (*Note: Title V permit condition numbers alone are not the underlying applicable requirements*). See Permit No. R13-2332E issued October 21, 2013.
☐ Permit Shield
For all facility-wide applicable requirements listed above, provide monitoring/testing / recordkeeping / reporting which shall be used to demonstrate compliance. If the method is based on a permit or rule, include the condition number and/or citation. (Note: Each requirement listed above must have an associated method of demonstrating compliance. If there is not already a required method in place, then a method must be proposed.) See Permit No. R13-2332E issued October 21, 2013.
Are you in compliance with all facility-wide applicable requirements? ☒ Yes ☐ No If no, complete the **Schedule of Compliance Form** as **ATTACHMENT F**. ***N/A***
20. Facility-Wide Applicable Requirements *(Continued)* - *Attach additional pages as necessary.*
List all facility-wide applicable requirements. For each applicable requirement, include the rule citation and/or permit with the condition number. See Permit No. R13-2332E issued October 21, 2013.
☐ Permit Shield
For all facility-wide applicable requirements listed above, provide monitoring/testing/recordkeeping/ reporting which shall be used to demonstrate compliance. If the method is based on a permit or rule, include the condition number and/or citation. (Note: Each requirement listed above must have an associated method of demonstrating compliance. If there is not already a required method in place, then a method must be proposed.) See Permit No. R13-2332E issued October 21, 2013.
Are you in compliance with all facility-wide applicable requirements? ☒ Yes ☐ No If no, complete the **Schedule of Compliance Form** as **ATTACHMENT F**. ***N/A***

21. Active Permits/Consent Orders		
Permit or Consent Order Number	Date of Issuance MM/DD/YYYY	List any Permit Determinations that Affect the Permit *(if any)*
R13-2332E	10/21/2013	***N/A***
R30-04100045-2011	12/17/2013	***N/A***

22. Inactive Permits/Obsolete Permit Conditions		
Permit Number	Date of Issuance	Permit Condition Number
All prior permits/conditions	Varies	Varies
	/ /	

Section 3: Facility-Wide Emissions

23. Facility-Wide Emissions Summary [Tons per Year]	
Criteria Pollutants	Potential Emissions
Carbon Monoxide (CO)	***N/A***
Nitrogen Oxides (NO_X)	***N/A***
Lead (Pb)	***N/A***
Particulate Matter ($PM_{2.5}$)[1]	***N/A***
Particulate Matter (PM_{10})[1]	6.8
Total Particulate Matter (TSP)	6.8
Sulfur Dioxide (SO_2)	***N/A***
Volatile Organic Compounds (VOC)	168.8
Hazardous Air Pollutants[2]	Potential Emissions
Single HAP	***N/A***
All HAPs Combined	***N/A***
Regulated Pollutants other than Criteria and HAP	Potential Emissions
N/A	

[1]$PM_{2.5}$ and PM_{10} are components of TSP.
[2]For HAPs that are also considered PM or VOCs, emissions should be included in both the HAPs section and the Criteria Pollutants section.

Section 4: Insignificant Activities

24. Insignificant Activities (Check all that apply)		
☒	1.	Air compressors and pneumatically operated equipment, including hand tools.
☐	2.	Air contaminant detectors or recorders, combustion controllers or shutoffs. ***N/A***
☒	3.	Any consumer product used in the same manner as in normal consumer use, provided the use results in a duration and frequency of exposure which are not greater than those experienced by consumer, and which may include, but not be limited to, personal use items; janitorial cleaning supplies, office supplies and supplies to maintain copying equipment.
☒	4.	Bathroom/toilet vent emissions.
☐	5.	Batteries and battery charging stations, except at battery manufacturing plants. ***N/A***
☐	6.	Bench-scale laboratory equipment used for physical or chemical analysis, but not lab fume hoods or vents. Many lab fume hoods or vents might qualify for treatment as insignificant (depending on the applicable SIP) or be grouped together for purposes of description. ***N/A***
☐	7.	Blacksmith forges. ***N/A***
☐	8.	Boiler water treatment operations, not including cooling towers. ***N/A***
☒	9.	Brazing, soldering or welding equipment used as an auxiliary to the principal equipment at the source.
☐	10.	CO_2 lasers, used only on metals and other materials which do not emit HAP in the process. ***N/A***
☒	11.	Combustion emissions from propulsion of mobile sources, except for vessel emissions from Outer Continental Shelf sources.
☒	12.	Combustion units designed and used exclusively for comfort heating that use liquid petroleum gas or natural gas as fuel.
☒	13.	Comfort air conditioning or ventilation systems not used to remove air contaminants generated by or released from specific units of equipment.
☐	14.	Demineralized water tanks and demineralizer vents. ***N/A***
☐	15.	Drop hammers or hydraulic presses for forging or metalworking. ***N/A***
☐	16.	Electric or steam-heated drying ovens and autoclaves, but not the emissions from the articles or substances being processed in the ovens or autoclaves or the boilers delivering the steam. ***N/A***
☐	17.	Emergency (backup) electrical generators at residential locations. ***N/A***
☐	18.	Emergency road flares. ***N/A***
☐	19.	Emission units which do not have any applicable requirements and which emit criteria pollutants (CO, NO_x, SO_2, VOC and PM) into the atmosphere at a rate of less than 1 pound per hour and less than 10,000 pounds per year aggregate total for each criteria pollutant from all emission units. **N/A** Please specify all emission units for which this exemption applies along with the quantity of criteria pollutants emitted on an hourly and annual basis: ***N/A***
☐	20.	Emission units which do not have any applicable requirements and which emit hazardous air pollutants into the atmosphere at a rate of less than 0.1 pounds per hour and less than 1,000 pounds per year aggregate total for all HAPs from all emission sources. This limitation cannot be used for any source which emits dioxin/furans nor for toxic air pollutants as per 45CSR27. ***N/A*** Please specify all emission units for which this exemption applies along with the quantity of hazardous air pollutants emitted on an hourly and annual basis: ***N/A***
☐	21.	Environmental chambers not using hazardous air pollutant (HAP) gases. ***N/A***

24. Insignificant Activities (Check all that apply)		
☒	22.	Equipment on the premises of industrial and manufacturing operations used solely for the purpose of preparing food for human consumption.
☐	23.	Equipment used exclusively to slaughter animals, but not including other equipment at slaughterhouses, such as rendering cookers, boilers, heating plants, incinerators, and electrical power generating equipment. ***N/A***
☒	24.	Equipment used for quality control/assurance or inspection purposes, including sampling equipment used to withdraw materials for analysis.
☒	25.	Equipment used for surface coating, painting, dipping or spray operations, except those that will emit VOC or HAP.
☒	26.	Fire suppression systems.
☐	27.	Firefighting equipment and the equipment used to train firefighters. ***N/A***
☐	28.	Flares used solely to indicate danger to the public. ***N/A***
☒	29.	Fugitive emission related to movement of passenger vehicle provided the emissions are not counted for applicability purposes and any required fugitive dust control plan or its equivalent is submitted.
☐	30.	Hand-held applicator equipment for hot melt adhesives with no VOC in the adhesive formulation. ***N/A***
☒	31.	Hand-held equipment for buffing, polishing, cutting, drilling, sawing, grinding, turning or machining wood, metal or plastic. *Includes equipment/activities formerly designated as EU-02 Finishing Area*
☐	32.	Humidity chambers. ***N/A***
☐	33.	Hydraulic and hydrostatic testing equipment. ***N/A***
☒	34.	Indoor or outdoor kerosene heaters.
☒	35.	Internal combustion engines used for landscaping purposes.
☐	36.	Laser trimmers using dust collection to prevent fugitive emissions. ***N/A***
☐	37.	Laundry activities, except for dry-cleaning and steam boilers. ***N/A***
☒	38.	Natural gas pressure regulator vents, excluding venting at oil and gas production facilities.
☐	39.	Oxygen scavenging (de-aeration) of water. ***N/A***
☐	40.	Ozone generators. ***N/A***
☒	41.	Plant maintenance and upkeep activities (e.g., grounds-keeping, general repairs, cleaning, painting, welding, plumbing, re-tarring roofs, installing insulation, and paving parking lots) provided these activities are not conducted as part of a manufacturing process, are not related to the source's primary business activity, and not otherwise triggering a permit modification. (Cleaning and painting activities qualify if they are not subject to VOC or HAP control requirements. Asphalt batch plant owners/operators must still get a permit if otherwise requested.)
☒	42.	Portable electrical generators that can be moved by hand from one location to another. "Moved by Hand" means that it can be moved without the assistance of any motorized or non-motorized vehicle, conveyance, or device.
☐	43.	Process water filtration systems and demineralizers. ***N/A***
☒	44.	Repair or maintenance shop activities not related to the source's primary business activity, not including emissions from surface coating or de-greasing (solvent metal cleaning) activities, and not otherwise triggering a permit modification.
☒	45.	Repairs or maintenance where no structural repairs are made and where no new air pollutant emitting facilities are installed or modified.
☒	46.	Routing calibration and maintenance of laboratory equipment or other analytical instruments.
☐	47.	Salt baths using nonvolatile salts that do not result in emissions of any regulated air pollutants. Shock chambers. ***N/A***

24. Insignificant Activities (Check all that apply)		
☐	48.	Shock chambers. ***N/A***
☐	49.	Solar simulators. ***N/A***
☒	50.	Space heaters operating by direct heat transfer.
☐	51.	Steam cleaning operations. ***N/A***
☐	52.	Steam leaks. ***N/A***
☐	53.	Steam sterilizers. ***N/A***
☐	54.	Steam vents and safety relief valves. ***N/A***
☐	55.	Storage tanks, reservoirs, and pumping and handling equipment of any size containing soaps, vegetable oil, grease, animal fat, and nonvolatile aqueous salt solutions, provided appropriate lids and covers are utilized. ***N/A***
☐	56.	Storage tanks, vessels, and containers holding or storing liquid substances that will not emit any VOC or HAP. Exemptions for storage tanks containing petroleum liquids or other volatile organic liquids should be based on size limits such as storage tank capacity and vapor pressure of liquids stored and are not appropriate for this list. ***N/A***
☐	57.	Such other sources or activities as the Director may determine. ***N/A***
☒	58.	Tobacco smoking rooms and areas.
☐	59.	Vents from continuous emissions monitors and other analyzers. ***N/A***

Section 5: Emission Units, Control Devices, and Emission Points

25. Equipment Table
Fill out the **Title V Equipment Table** and provide it as **ATTACHMENT D**.
26. Emission Units
For each emission unit listed in the **Title V Equipment Table**, fill out and provide an **Emission Unit Form** as **ATTACHMENT E**.
For each emission unit not in compliance with an applicable requirement, fill out a **Schedule of Compliance Form** as **ATTACHMENT F**. ***N/A***
27. Control Devices
For each control device listed in the **Title V Equipment Table**, fill out and provide an **Air Pollution Control Device Form** as **ATTACHMENT G**.
For any control device that is required on an emission unit in order to meet a standard or limitation for which the potential pre-control device emissions of an applicable regulated air pollutant is greater than or equal to the Title V Major Source Threshold Level, refer to the **Compliance Assurance Monitoring (CAM) Form(s)** for CAM applicability. Fill out and provide these forms, if applicable, for each Pollutant Specific Emission Unit (PSEU) as **ATTACHMENT H**. ***N/A***

Section 6: Certification of Information

28. Certification of Truth, Accuracy and Completeness and Certification of Compliance

*Note: This Certification must be signed by a responsible official. The **original**, signed in **blue ink**, must be submitted with the application. Applications without an **original** signed certification will be considered as incomplete.*

a. Certification of Truth, Accuracy and Completeness

I certify that I am a responsible official (as defined at 45CSR§30-2.38) and am accordingly authorized to make this submission on behalf of the owners or operators of the source described in this document and its attachments. I certify under penalty of law that I have personally examined and am familiar with the statements and information submitted in this document and all its attachments. Based on my inquiry of those individuals with primary responsibility for obtaining the information, I certify that the statements and information are to the best of my knowledge and belief true, accurate, and complete. I am aware that there are significant penalties for submitting false statements and information or omitting required statements and information, including the possibility of fine and/or imprisonment.

b. Compliance Certification

Except for requirements identified in the Title V Application for which compliance is not achieved, I, the undersigned hereby certify that, based on information and belief formed after reasonable inquiry, all air contaminant sources identified in this application are in compliance with all applicable requirements.

Responsible official (type or print)

Name: Thomas E. Straub	Title: President

Responsible official's signature:

Signature: _____ Signature Date: _____

(Must be signed and dated in blue ink)

Note: Please check all applicable attachments included with this permit application:

☒	ATTACHMENT A: Area Map
☒	ATTACHMENT B: Plot Plan(s)
☒	ATTACHMENT C: Process Flow Diagram(s)
☒	ATTACHMENT D: Equipment Table
☒	ATTACHMENT E: Emission Unit Form(s)
☐	ATTACHMENT F: Schedule of Compliance Form(s) ***N/A***
☒	ATTACHMENT G: Air Pollution Control Device Form(s)
☒	ATTACHMENT H: Compliance Assurance Monitoring (CAM) Form(s) ***N/A***

All of the required forms and additional information can be found and downloaded from, the DEP website at www.dep.wv.gov/daq, requested by phone (304) 926-0475, and/or obtained through the mail.

Attachment A
Area Map

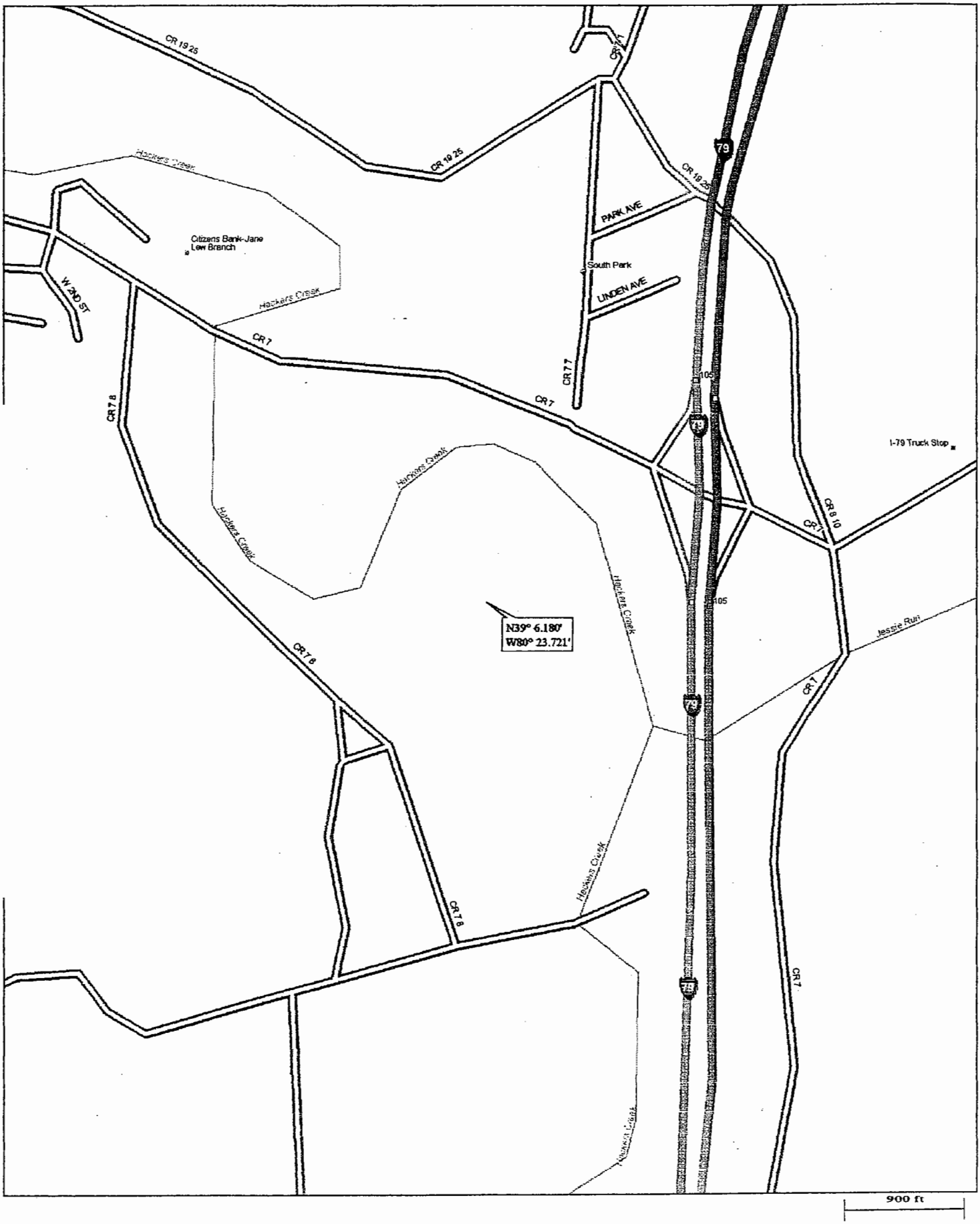

© 2000 DeLorme. Street Atlas USA ® Road Warrior Edition; © 2000 GDT, Inc., Rel. 04/2000

Scale: 1 : 6.400 Zoom Level: 15-0 Datum: WGS84

Attachment B
Plot Plan

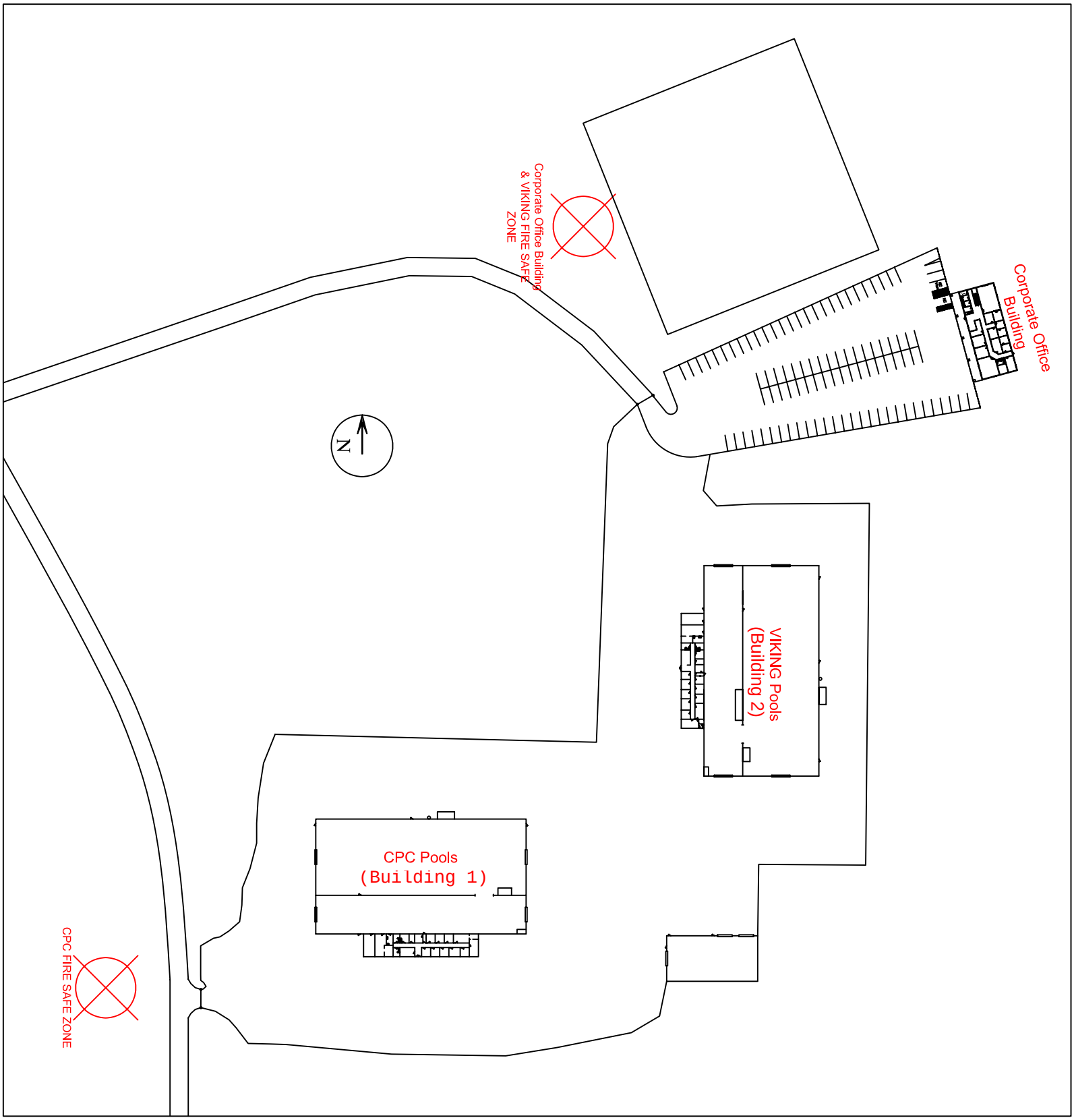
Corporate Office Building
Corporate Office Building & VIKING FIRE SAFE ZONE
VIKING Pools (Building 2)
N
CPC Pools (Building 1)
CPC FIRE SAFE ZONE

Attachment C
Process Flow Diagram

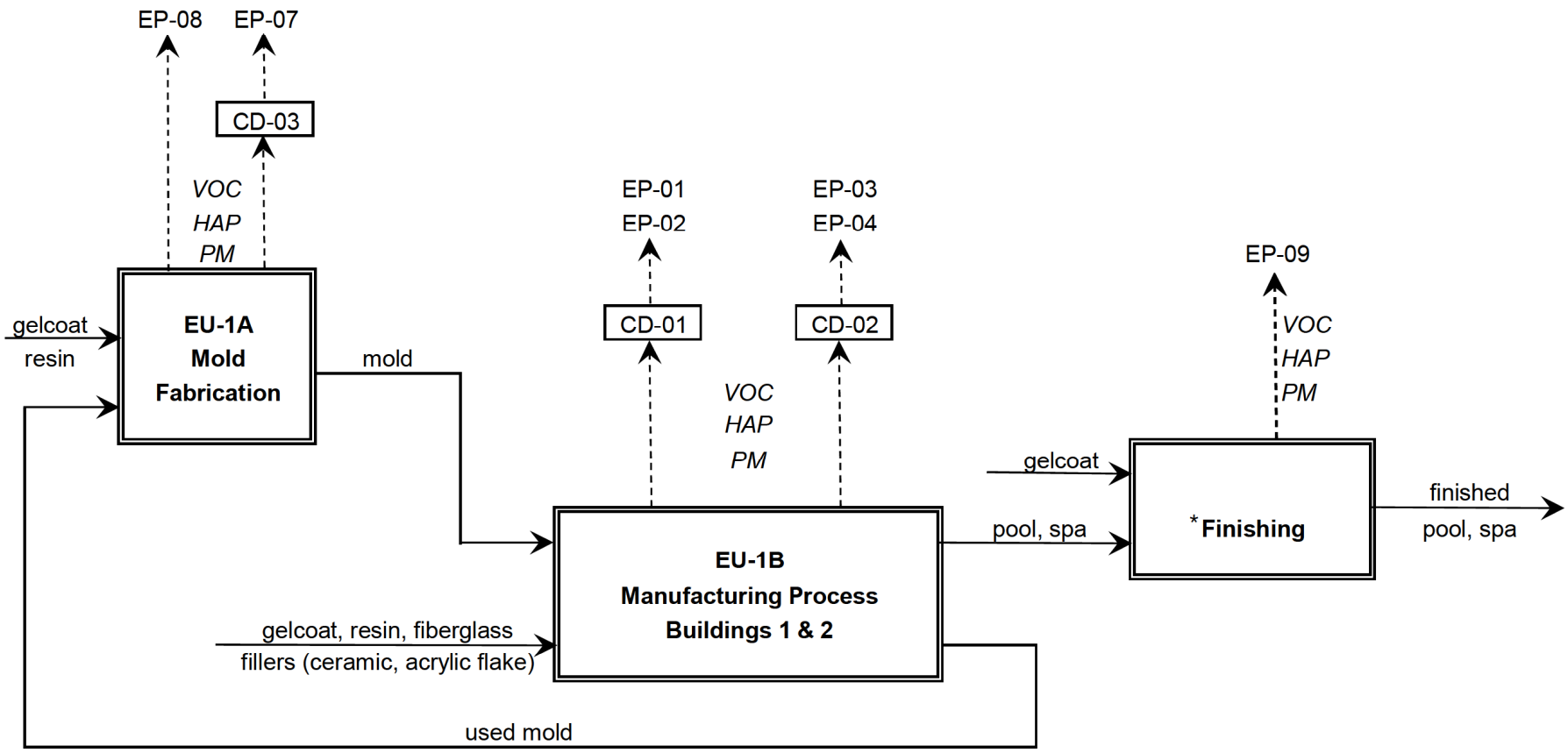

Notes:

CD-01 and CD-02 are the filter systems in Buildings 1 and 2, respectively.

CD-03 is the "EuroVac" filter system for mold sanding in Building 1.

*Finishing has been designated as an insignificant activity.

RPS GaiaTech
Environmental Risk. Managed.

Process Flow Diagram
Viking Pools - WV
Jane Lew, West Virtinia

Attachment D
Equipment Table

ATTACHMENT D - Title V Equipment Table

(includes all emission units at the facility except those designated as insignificant activities in Section 4, Item 24 of the General Forms)

Emission Point ID[1]	Control Device[1]	Emission Unit ID[1]	Emission Unit Description	Design Capacity	Year Installed/ Modified
EP-01, EP-02	CD-01	EU-1B	Building One Manufacturing Process (Viking Pools Building)	N/A	See active permits
EP-03, EP-04	CD-02		Building Two Manufacturing Process (CPC Pools Building)	N/A	See active permits
EP-07	CD-03	EU-1A	Building One Mold Fabrication/ Maintenance/Research and Development	N/A	See active permits
EP-08	NA		Building Two Mold Construction/ Maintenance/ Repair	N/A	See active permits

Notes:

The emission unit formerly designated as EU-02 (Finishing) is now designated as an insignificant activity.

Activities formerly designated as EU-03 (Material Storage Area) and EU-04 (Haul Road Particulate Fugitives) are not subject to any requirements under the source's current Reg. 13 and Reg. 30 permits and should be not be included in the renewed Title V permit.

[1]For 45CSR13 permitted sources, the numbering system used for the emission points, control devices, and emission units should be consistent with the numbering system used in the 45CSR13 permit. For grandfathered sources, the numbering system should be consistent with registrations or emissions inventory previously submitted to DAQ. For emission points, control devices, and emissions units which have not been previously labeled, use the following 45CSR13 numbering system: 1S, 2S, 3S,... or other appropriate description for emission units; 1C, 2C, 3C,... or other appropriate designation for control devices; 1E, 2E, 3E, ... or other appropriate designation for emission points.

Attachment E
Emission Unit Forms

ATTACHMENT E - Emission Unit Form

Emission Unit Description

Emission unit ID number:	**Emission unit name:**	**List any control devices associated with this emission unit:**
EU-1B	Building One Manufacturing Process (Viking Pools Building) Building Two Manufacturing Process (CPC Pools Building)	CD-01 CD-02

Provide a description of the emission unit (type, method of operation, design parameters, etc.):
One or more layers of gelcoat, either filled or unfilled, is applied with atomized applicators. One or more layers of resin, either filled or unfilled, is applied using either atomized (typically for filled resin) or non-atomized applicators. Air pollutants generated by this emission unit include VOCs (e.g., styrene, methyl methacrylate) and minor amounts of particulate matter (overspray, aerosol) from gelcoat and resin application.

Manufacturer:	**Model number:**	**Serial number:**
N/A	N/A	N/A
Construction date:	**Installation date:**	**Modification date(s):**
See active permits	See active permits	See active permits

Design Capacity (examples: furnaces - tons/hr, tanks - gallons): N/A

Maximum Hourly Throughput:	**Maximum Annual Throughput:**	**Maximum Operating Schedule:**
N/A	N/A	N/A

Fuel Usage Data **(fill out all applicable fields) N/A**

Does this emission unit combust fuel? ___Yes ___ No	**If yes, is it?** ___ Indirect Fired ___Direct Fired
Maximum design heat input and/or maximum horsepower rating:	**Type and Btu/hr rating of burners:**

List the primary fuel type(s) and if applicable, the secondary fuel type(s). For each fuel type listed, provide the maximum hourly and annual fuel usage for each.

Describe each fuel expected to be used during the term of the permit.

Fuel Type	Max. Sulfur Content	Max. Ash Content	BTU Value

Page _____ of _____

Emissions Data		
Criteria Pollutants	Potential Emissions	
	PPH	TPY
Carbon Monoxide (CO)		N/A
Nitrogen Oxides (NO_X)		N/A
Lead (Pb)		N/A
Particulate Matter ($PM_{2.5}$)		N/A
Particulate Matter (PM_{10})		3.2 (per building)
Total Particulate Matter (TSP)		3.2 (per building)
Sulfur Dioxide (SO_2)		N/A
Volatile Organic Compounds (VOC)		164.8 (Building 1 & 2 Combined)
Hazardous Air Pollutants	Potential Emissions	
	PPH	TPY
N/A		
Regulated Pollutants other than Criteria and HAP	Potential Emissions	
	PPH	TPY
N/A		

List the method(s) used to calculate the potential emissions (include dates of any stack tests conducted, versions of software used, source and dates of emission factors, etc.).

See Permit No. R13-2332E

Applicable Requirements

List all applicable requirements for this emission unit. For each applicable requirement, include the underlying rule/regulation citation and/or <u>construction permit</u> with the condition number. (*Note: Title V permit condition numbers alone are not the underlying applicable requirements*). If an emission limit is calculated based on the type of source and design capacity or if a standard is based on a design parameter, this information should also be included.

See Permit No. R13-2332E

____ Permit Shield

For all applicable requirements listed above, provide monitoring/testing/recordkeeping/reporting which shall be used to demonstrate compliance. If the method is based on a permit or rule, include the condition number or citation. (Note: Each requirement listed above must have an associated method of demonstrating compliance. If there is not already a required method in place, then a method must be proposed.)

See Permit No. R13-2332E

Are you in compliance with all applicable requirements for this emission unit? _✔_Yes ___No

If no, complete the **Schedule of Compliance Form** as **ATTACHMENT F**. N/A

Page _____ of _____

ATTACHMENT E - Emission Unit Form

Emission Unit Description

Emission unit ID number:	**Emission unit name:**	**List any control devices associated with this emission unit:**
EU-1A	Building One Mold Fabrication/ Maintenance/Research and Development Building Two Mold Construction/ Maintenance/ Repair	CD-03 N/A

Provide a description of the emission unit (type, method of operation, design parameters, etc.):
A mold is fabricated, or otherwise maintained, repaired or prepared for use in pool production. In addition, the Facility performs research and development activities as an ancillary part of its routine operations. Air pollutants generated by this emission unit include relatively minor amounts of VOCs (e.g., styrene, methyl methacrylate) from gelcoat and resin application and minor amounts of particulate matter from mold sanding/repair activities.

Manufacturer:	**Model number:**	**Serial number:**
N/A	N/A	N/A
Construction date:	**Installation date:**	**Modification date(s):**
See active permits	See active permits	See active permits

Design Capacity (examples: furnaces - tons/hr, tanks - gallons): N/A

Maximum Hourly Throughput:	**Maximum Annual Throughput:**	**Maximum Operating Schedule:**
N/A	N/A	N/A

Fuel Usage Data **(fill out all applicable fields) N/A**

Does this emission unit combust fuel? ___Yes ___ No	**If yes, is it?** ___ Indirect Fired ___Direct Fired
Maximum design heat input and/or maximum horsepower rating:	**Type and Btu/hr rating of burners:**

List the primary fuel type(s) and if applicable, the secondary fuel type(s). For each fuel type listed, provide the maximum hourly and annual fuel usage for each.

Describe each fuel expected to be used during the term of the permit.

Fuel Type	Max. Sulfur Content	Max. Ash Content	BTU Value

Page _____ of _____

Emissions Data		
Criteria Pollutants	Potential Emissions	
	PPH	TPY
Carbon Monoxide (CO)		N/A
Nitrogen Oxides (NO_X)		N/A
Lead (Pb)		N/A
Particulate Matter ($PM_{2.5}$)		N/A
Particulate Matter (PM_{10})		0.4
Total Particulate Matter (TSP)		0.4
Sulfur Dioxide (SO_2)		N/A
Volatile Organic Compounds (VOC)		4.0
Hazardous Air Pollutants	Potential Emissions	
	PPH	TPY
N/A		
Regulated Pollutants other than Criteria and HAP	Potential Emissions	
	PPH	TPY
N/A		

List the method(s) used to calculate the potential emissions (include dates of any stack tests conducted, versions of software used, source and dates of emission factors, etc.).

See Permit No. R13-2332E

Applicable Requirements

List all applicable requirements for this emission unit. For each applicable requirement, include the underlying rule/regulation citation and/or <u>construction permit</u> with the condition number. (*Note: Title V permit condition numbers alone are not the underlying applicable requirements*). If an emission limit is calculated based on the type of source and design capacity or if a standard is based on a design parameter, this information should also be included.

See Permit No. R13-2332E

____ Permit Shield

For all applicable requirements listed above, provide monitoring/testing/recordkeeping/reporting which shall be used to demonstrate compliance. If the method is based on a permit or rule, include the condition number or citation. (Note: Each requirement listed above must have an associated method of demonstrating compliance. If there is not already a required method in place, then a method must be proposed.)

See Permit No. R13-2332E

Are you in compliance with all applicable requirements for this emission unit? _✔_Yes ___No

If no, complete the **Schedule of Compliance Form** as **ATTACHMENT F**. N/A

Page _____ of _____

Attachment G
Air Pollution Control Device Forms

ATTACHMENT G - Air Pollution Control Device Form

Control device ID number: CD-01	**List all emission units associated with this control device.** EU-1B	
Manufacturer: N/A- Custom built	**Model number:** N/A	**Installation date:** See active permits

Type of Air Pollution Control Device:

__ Baghouse/Fabric Filter ___ Venturi Scrubber ___ Multiclone

___ Carbon Bed Adsorber ___ Packed Tower Scrubber ___ Single Cyclone

___ Carbon Drum(s) ___ Other Wet Scrubber ___ Cyclone Bank

___ Catalytic Incinerator ___ Condenser ___ Settling Chamber

___ Thermal Incinerator ___ Flare ✔ Other (describe) Particulate Filter

___ Wet Plate Electrostatic Precipitator ___ Dry Plate Electrostatic Precipitator

List the pollutants for which this device is intended to control and the capture and control efficiencies.

Pollutant	Capture Efficiency	Control Efficiency
PM	100%	90%
PM-10	100%	90%

Explain the characteristic design parameters of this control device (flow rates, pressure drops, number of bags, size, temperatures, etc.).

Gas flow into the collector: 10000 ACF @ 70 °F and 14.7 PSIA

Pressure: Max- 760 mmHg, Typical- 6-8 mmHg

Gas stream temperature: Inlet- 60-90 °F , Outlet- 60-90 °F

Gas flow rate: Maximum- 50,000 ACFM, Average- 50,000 ACFM

Is this device subject to the CAM requirements of 40 C.F.R. 64? ___ Yes _✔_ No

If Yes, **Complete the Compliance Assurance Monitoring (CAM) Plan Form**

If No**, Provide justification.** Pre-control PM emissions are 32 tpy

Describe the parameters monitored and/or methods used to indicate performance of this control device.

See Condition 4.2.5. in Permit No. R30-04100045-2011 issued 12/17/2013.

ATTACHMENT G - Air Pollution Control Device Form

Control device ID number: CD-02	**List all emission units associated with this control device.** EU-1B	
Manufacturer: N/A- Custom built	**Model number:** N/A	**Installation date:** See active permits

Type of Air Pollution Control Device:

__ Baghouse/Fabric Filter ___ Venturi Scrubber ___ Multiclone

___ Carbon Bed Adsorber ___ Packed Tower Scrubber ___ Single Cyclone

___ Carbon Drum(s) ___ Other Wet Scrubber ___ Cyclone Bank

___ Catalytic Incinerator ___ Condenser ___ Settling Chamber

___ Thermal Incinerator ___ Flare ✔ Other (describe) Particulate Filter

___ Wet Plate Electrostatic Precipitator ___ Dry Plate Electrostatic Precipitator

List the pollutants for which this device is intended to control and the capture and control efficiencies.

Pollutant	Capture Efficiency	Control Efficiency
PM	100%	90%
PM-10	100%	90%

Explain the characteristic design parameters of this control device (flow rates, pressure drops, number of bags, size, temperatures, etc.).

Gas flow into the collector: 10000 ACF @ 70 °F and 14.7 PSIA

Pressure: Max- 760 mmHg, Typical- 6-8 mmHg

Gas stream temperature: Inlet- 60-90 °F , Outlet- 60-90 °F

Gas flow rate: Maximum- 50,000 ACFM, Average- 50,000 ACFM

Is this device subject to the CAM requirements of 40 C.F.R. 64? ___ Yes _✔_ No

If Yes, **Complete the Compliance Assurance Monitoring (CAM) Plan Form**

If No**, Provide justification.** Pre-control PM emissions are 32 tpy

Describe the parameters monitored and/or methods used to indicate performance of this control device.

See Condition 4.2.5. in Permit No. R30-04100045-2011 issued 12/17/2013.

ATTACHMENT G - Air Pollution Control Device Form

Control device ID number: CD-03	**List all emission units associated with this control device.** EU-1A	
Manufacturer: EuroVac	**Model number:** N/A	**Installation date:** See active permits

Type of Air Pollution Control Device:

__ Baghouse/Fabric Filter ___ Venturi Scrubber ___ Multiclone

___ Carbon Bed Adsorber ___ Packed Tower Scrubber ___ Single Cyclone

___ Carbon Drum(s) ___ Other Wet Scrubber ___ Cyclone Bank

___ Catalytic Incinerator ___ Condenser ___ Settling Chamber

___ Thermal Incinerator ___ Flare ✔ Other (describe) Mold Sanding Filter _____

___ Wet Plate Electrostatic Precipitator ___ Dry Plate Electrostatic Precipitator

List the pollutants for which this device is intended to control and the capture and control efficiencies.

Pollutant	Capture Efficiency	Control Efficiency
PM	50%	≥ 90%
PM-10	50%	≥ 90%

Explain the characteristic design parameters of this control device (flow rates, pressure drops, number of bags, size, temperatures, etc.).

Gas flow into the collector: 10000 ACF @ 70 °F and 14.7 PSIA

Pressure: Max- 760 mmHg, Typical- 6-8 mmHg

Gas stream temperature: Inlet- 60-90 °F , Outlet- 60-90 °F

Gas flow rate: Maximum- 5000 ACFM, Average- 5000 ACFM

Is this device subject to the CAM requirements of 40 C.F.R. 64? ___ Yes _✔_ No

If Yes, **Complete the Compliance Assurance Monitoring (CAM) Plan Form**

If No**, Provide justification.** Pre-control PM emissions are 4.0 tpy

Describe the parameters monitored and/or methods used to indicate performance of this control device.

See Condition 5.1.3 in Permit No. R30-04100045-2011 issued 12/17/2013.

Attachment H
Compliance Assurance Monitoring (CAM)
Non-Applicability Demonstration

ATTACHMENT H - Compliance Assurance Monitoring (CAM) Plan Form

For definitions and information about the CAM rule, please refer to 40 CFR Part 64. Additional information (including guidance documents) may also be found at http://www.epa.gov/ttn/emc/cam.html

CAM APPLICABILITY DETERMINATION

1) Does the facility have a PSEU (Pollutant-Specific Emissions Unit considered separately with respect to **EACH** regulated air pollutant) that is subject to CAM (40 CFR Part 64), which must be addressed in this CAM plan submittal? To determine applicability, a PSEU must meet **all** of the following criteria (*If No, then the remainder of this form need not be completed*): ☐ YES ☒ NO

a. The PSEU is located at a major source that is required to obtain a Title V permit;

b. The PSEU is subject to an emission limitation or standard for the applicable regulated air pollutant that is NOT exempt;

LIST OF EXEMPT EMISSION LIMITATIONS OR STANDARDS:

- NSPS (40 CFR Part 60) or NESHAP (40 CFR Parts 61 and 63) proposed after 11/15/1990.
- Stratospheric Ozone Protection Requirements.
- Acid Rain Program Requirements.
- Emission Limitations or Standards for which a WVDEP Division of Air Quality Title V permit specifies a continuous compliance determination method, as defined in 40 CFR §64.1.
- An emission cap that meets the requirements specified in 40 CFR §70.4(b)(12).

c. The PSEU uses an add-on control device (as defined in 40 CFR §64.1) to achieve compliance with an emission limitation or standard;

d. The PSEU has potential pre-control device emissions of the applicable regulated air pollutant that are equal to or greater than the Title V Major Source Threshold Levels; AND

e. The PSEU is NOT an exempt backup utility power emissions unit that is municipally-owned.

BASIS OF CAM SUBMITTAL

2) Mark the appropriate box below as to why this CAM plan is being submitted as part of an application for a Title V permit:

☐ RENEWAL APPLICATION. **ALL** PSEUs for which a CAM plan has NOT yet been approved need to be addressed in this CAM plan submittal.

☐ INITIAL APPLICATION (submitted after 4/20/98). **ONLY** large PSEUs (i. e., PSEUs with potential post-control device emissions of an applicable regulated air pollutant that are equal to or greater than Major Source Threshold Levels) need to be addressed in this CAM plan submittal.

☐ SIGNIFICANT MODIFICATION TO LARGE PSEUs. **ONLY** large PSEUs being modified after 4/20/98 need to be addressed in this cam plan submittal. For large PSEUs with an approved CAM plan, Only address the appropriate monitoring requirements affected by the significant modification.

3) [a] BACKGROUND DATA AND INFORMATION

Complete the following table for **all** PSEUs that need to be addressed in this CAM plan submittal. This section is to be used to provide background data and information for each PSEU In order to supplement the submittal requirements specified in 40 CFR §64.4. If additional space is needed, attach and label accordingly.

PSEU DESIGNATION	DESCRIPTION	POLLUTANT	CONTROL DEVICE	[b] EMISSION LIMITATION or STANDARD	[c] MONITORING REQUIREMENT
EXAMPLE Boiler No. 1	Wood-Fired Boiler	PM	Multiclone	45CSR§2-4.1.c.; 9.0 lb/hr	Monitor pressure drop across multiclone: Weekly inspection of multiclone

[a] If a control device is common to more than one PSEU, one monitoring plan may be submitted for the control device with the affected PSEUs identified and any conditions that must be maintained or monitored in accordance with 40 CFR §64.3(a). If a single PSEU is controlled by more than one control device similar in design and operation, one monitoring plan for the applicable control devices may be submitted with the applicable control devices identified and any conditions that must be maintained or monitored in accordance with 40 CFR §64.3(a).

[b] Indicate the emission limitation or standard for any applicable requirement that constitutes an emission limitation, emission standard, or standard of performance (as defined in 40 CFR §64.1).

[c] Indicate the monitoring requirements for the PSEU that are required by an applicable regulation or permit condition.

CAM MONITORING APPROACH CRITERIA			
Complete this section for **EACH** PSEU that needs to be addressed in this CAM plan submittal. This section may be copied as needed for each PSEU. This section is to be used to provide monitoring data and information for EACH indicator selected for EACH PSEU in order to meet the monitoring design criteria specified in 40 CFR §64.3 and §64.4. if more than two indicators are being selected for a PSEU or if additional space is needed, attach and label accordingly with the appropriate PSEU designation, pollutant, and indicator numbers.			
4a) PSEU Designation:	**4b) Pollutant:**	**4c) [a] Indicator No. 1:**	**4d) [a] Indicator No. 2:**
5a) GENERAL CRITERIA Describe the MONITORING APPROACH used to measure the indicators:			
[b] Establish the appropriate INDICATOR RANGE or the procedures for establishing the indicator range which provides a reasonable assurance of compliance:			
5b) PERFORMANCE CRITERIA Provide the SPECIFICATIONS FOR OBTAINING REPRESENTATIVE DATA, such as detector location, installation specifications, and minimum acceptable accuracy:			
[c] For new or modified monitoring equipment, provide VERIFICATION PROCEDURES, including manufacturer's recommendations, TO CONFIRM THE OPERATIONAL STATUS of the monitoring:			
Provide QUALITY ASSURANCE AND QUALITY CONTROL (QA/QC) PRACTICES that are adequate to ensure the continuing validity of the data, (i.e., daily calibrations, visual inspections, routine maintenance, RATA, etc.):			
[d] Provide the MONITORING FREQUENCY:			
Provide the DATA COLLECTION PROCEDURES that will be used:			
Provide the DATA AVERAGING PERIOD for the purpose of determining whether an excursion or exceedance has occurred:			

[a] Describe all indicators to be monitored which satisfies 40 CFR §64.3(a). Indicators of emission control performance for the control device and associated capture system may include measured or predicted emissions (including visible emissions or opacity), process and control device operating parameters that affect control device (and capture system) efficiency or emission rates, or recorded findings of inspection and maintenance activities.

[b] Indicator Ranges may be based on a single maximum or minimum value or at multiple levels that are relevant to distinctly different operating conditions, expressed as a function of process variables, expressed as maintaining the applicable indicator in a particular operational status or designated condition, or established as interdependent between more than one indicator. For CEMS, COMS, or PEMS, include the most recent certification test for the monitor.

[c] The verification for operational status should include procedures for installation, calibration, and operation of the monitoring equipment, conducted in accordance with the manufacturer's recommendations, necessary to confirm the monitoring equipment is operational prior to the commencement of the required monitoring.

[d] Emission units with post-control PTE ≥ 100 percent of the amount classifying the source as a major source (i.e., Large PSEU) must collect four or more values per hour to be averaged. A reduced data collection frequency may be approved in limited circumstances. Other emission units must collect data at least once per 24 hour period.

RATIONALE AND JUSTIFICATION

Complete this section for **EACH** PSEU that needs to be addressed in this CAM plan submittal. This section may be copied as needed for each PSEU. This section is to be used to provide rationale and justification for the selection of EACH indicator and monitoring approach and EACH indicator range in order to meet the submittal requirements specified in 40 CFR §64.4.

6a) PSEU Designation:	6b) Regulated Air Pollutant:

7) **INDICATORS AND THE MONITORING APPROACH**: Provide the rationale and justification for the selection of the indicators and the monitoring approach used to measure the indicators. Also provide any data supporting the rationale and justification. Explain the reasons for any differences between the verification of operational status or the quality assurance and control practices proposed, and the manufacturer's recommendations. (If additional space is needed, attach and label accordingly with the appropriate PSEU designation and pollutant):

8) **INDICATOR RANGES**: Provide the rationale and justification for the selection of the indicator ranges. The rationale and justification shall indicate how **EACH** indicator range was selected by either a COMPLIANCE OR PERFORMANCE TEST, a TEST PLAN AND SCHEDULE, or by ENGINEERING ASSESSMENTS. Depending on which method is being used for each indicator range, include the specific information required below for that specific indicator range. (If additional space is needed, attach and label accordingly with the appropriate PSEU designation and pollutant):

- COMPLIANCE OR PERFORMANCE TEST (Indicator ranges determined from control device operating parameter data obtained during a compliance or performance test conducted under regulatory specified conditions or under conditions representative of maximum potential emissions under anticipated operating conditions. Such data may be supplemented by engineering assessments and manufacturer's recommendations). The rationale and justification shall INCLUDE a summary of the compliance or performance test results that were used to determine the indicator range, and documentation indicating that no changes have taken place that could result in a significant change in the control system performance or the selected indicator ranges since the compliance or performance test was conducted.

- TEST PLAN AND SCHEDULE (Indicator ranges will be determined from a proposed implementation plan and schedule for installing, testing, and performing any other appropriate activities prior to use of the monitoring). The rationale and justification shall INCLUDE the proposed implementation plan and schedule that will provide for use of the monitoring as expeditiously as practicable after approval of this CAM plan, except that in no case shall the schedule for completing installation and beginning operation of the monitoring exceed 180 days after approval.

- ENGINEERING ASSESSMENTS (Indicator Ranges or the procedures for establishing indicator ranges are determined from engineering assessments and other data, such as manufacturers' design criteria and historical monitoring data, because factors specific to the type of monitoring, control device, or PSEU make compliance or performance testing unnecessary). The rationale and justification shall INCLUDE documentation demonstrating that compliance testing is not required to establish the indicator range.

RATIONALE AND JUSTIFICATION:

Attachment I
Process Description

I. PROCESS DESCRIPTION

I.1 General

The Viking Pools facility (Facility) manufactures swimming pools, spas, and related products made of fiberglass reinforced plastic composite. There are two production lines (i.e., Building One and Building Two). The manufacturing process is semi-continuous which essentially consists of applying multiple layers of gelcoat and resin to a mold to produce a product (e.g., pool). For certain brands/products, gelcoats and or resins can be applied "filled", containing a material that imparts an aesthetic or structural characteristic to the product. The specific steps and materials used are dictated by the shape, size, color and style of the brand/product.

I.1.1 Process

The process flow diagram in Attachment C provides a schematic representation of the manufacturing process. Basic descriptions of the emission units at the Facility are as follows:

1) Emission Unit EU-1A: A mold is fabricated, or otherwise maintained, repaired or prepared for use in pool production. In addition, the Facility performs research and development activities as an ancillary part of its routine operations. Air pollutants generated by this emission unit include relatively minor amounts of VOCs (e.g., styrene, methylacrylate) from gelcoat and resin application and minor amounts of particulate matter from mold sanding/repair activities.

2) Emission Unit EU-1B: One or more layers of gelcoat, either filled or unfilled, is applied with atomized applicators. One or more layers of resin, either filled or unfilled, is applied using either atomized (typically for filled resin) or non-atomized applicators. Air pollutants generated by this emission unit include VOCs (e.g., styrene, methylacrylate) and minor amounts of particulate matter (overspray, aerosol) from gelcoat and resin application.

3) Emission Unit EU-02: Finishing is conducted on the completed pool/product outside of the manufacturing building; including some minor sanding of edges, as well as repair of any defects in the pool created during the manufacturing process. Air pollutants generated by this emission unit include minor amounts of VOCs from materials used and minor amounts of particulate matter from sanding.

Attachment J
Title V Application Checklist for Administrative Completeness

TITLE V PERMIT APPLICATION CHECKLIST
FOR ADMINISTRATIVE COMPLETENESS

A complete application is demonstrated when all of the information required below is properly prepared, completed and attached. The items listed below are required information which must be submitted with a Title V permit application. Any submittal will be considered incomplete if the required information is not included.*	
☒	Two signed copies of the application (at least one must contain the original "*Certification*" page signed and dated in blue ink)
☒	Correct number of copies of the application on separate CDs or diskettes, (i.e. at least one disc per copy)
☒	*Table of Contents (needs to be included but not for administrative completeness)
☒	Facility information
☒	Description of process and products, including NAICS and SIC codes, and including alternative operating scenarios
☒	Area map showing plant location
☒	Plot plan showing buildings and process areas
☒	Process flow diagram(s), showing all emission units, control equipment, emission points, and their relationships
☐	Identification of all applicable requirements with a description of the compliance status, the methods used for demonstrating compliance, and a Schedule of Compliance Form (ATTACHMENT F) for all requirements for which the source is not in compliance
☒	Listing of all active permits and consent orders (if applicable)
☒	Facility-wide emissions summary
☒	Identification of Insignificant Activities
☒	ATTACHMENT D - Title V Equipment Table completed for all emission units at the facility except those designated as insignificant activities
☒	ATTACHMENT E - Emission Unit Form completed for each emission unit listed in the Title V Equipment Table (ATTACHMENT D) and a Schedule of Compliance Form (ATTACHMENT F) for all requirements for which the emission unit is not in compliance
☒	ATTACHMENT G - Air Pollution Control Device Form completed for each control device listed in the Title V Equipment Table (ATTACHMENT D)
☒	ATTACHMENT H – Compliance Assurance Monitoring (CAM) Plan Form completed for each control device for which the "Is the device subject to CAM?" question is answered "Yes" on the Air Pollution Control Device Form (ATTACHMENT G)
☒	General Application Forms signed by a Responsible Official
☐	Confidential Information submitted in accordance with 45CSR31

Title V Checklist (checklist.doc)
Page 1of 1
Revised – 01/31/07