Dominion Resources Services, Inc.
5000 Dominion Boulevard, Glen Allen, VA 23060

dom.com

November 24, 2015

BY: U.S. CERTIFIED MAIL, RETURN RECEIPT REQUESTED
7014 3490 0000 0448 4754

William F. Durham
Director, Division of Air Quality
WVDEP
601 57th Street
Charleston, WV 25304

RE: Dominion Transmission, Inc. – Title V Renewal Application
Law Compressor Station – R30-03300014-2011

Dear Mr. Durham:

Enclosed please find the Title V Renewal Application for Dominion Transmission, Inc.'s Law Compressor Station, Permit No. R30-03300014-2011. The enclosure consists of one hard copy and two cd copies of the application that includes all attachments.

A separate R13 Class I Administrative Update application for Law Station was sent into WVDEP on 11/16/15. The administrative update is for the removal of NSPS Subpart OOOO requirements. Therefore, the NSPS Subpart OOOO requirements were not included in this renewal application.

As part of the renewal application, the equipment list has been updated based on recent updates to the Law Station:

- Equipment removed from the facility
  - CPR01 – Emergency Air Compressor; Ingersoll Rand 15-T (15 hp)
  - TK03 – 2,000 gal Horizontal Aboveground Storage Tank (Drip Gas)
- Equipment added to the facility:
  - CPR02 – Emergency Air Compressor; Ford (40 hp)
  - TK08 – 2,000 gal Horizontal Aboveground Storage Tank (Ethylene Glycol)
- Correction to equipment at the facility:
  - TK04 – This tank was previously listed as a 5,075 gal vertical aboveground storage tank for used oil, but the correct capacity is 1,000 gal.

In addition, as part of the renewal application, we request the following change to the Title V permit:

- Section 6.0 – Emergency Generators

  We request that the G60-C041 requirements be spelled out and included in the Title V permit (instead of just attached to the Title V permit) to improve clarity and ensure compliance. Therefore, all requirements for the facility will be in one permit (Title V).

- CAM Applicability

  We request that all CAM conditions be removed from the Title V permit as CAM does not apply. The dehy unit (DEHY02) is not subject to CAM since it is subject to NESHAP Subpart HH, which has provisions for compliance monitoring established after 1990. Per 64.2(b)(1)(i), "*emission limitations or standards proposed by the Administrator after November 15, 1990 pursuant to section 111 or 112 of the Act*" are exempt from CAM. CAM was established to build in provisions for how compliance would be demonstrated for emission limits if not adequately covered by a NSPS or NESHAP rule.

  In addition, for VOC purposes, the dehy unit is not subject to CAM per 64.2(b)(1)(vi), which states "*emission limitations or standards for which a part 70 or 71 permit specified a continuous compliance determination method, as defined in 64.1*" is exempt from CAM. Since the R13 permit for the facility (R13-2963) specifies a "continuous compliance determination method" condition (e.g. continuously monitoring the flare using a thermocouple to detect the presence of a flame) and that R13 condition was rolled into the Title V permit, CAM does not apply.

If you require any additional information, please contact Rebekah Remick at (804) 273-3536 or via email at Rebekah.J.Remick@dom.com.

Sincerely,

Amanda B. Tornabene
Director, Gas Environmental Services

LAW COMPRESSOR STATION
DOMINION TRANSMISSION INC.
APPLICATION FOR TITLE V OPERATING PERMIT RENEWAL
TITLE V OPERATING PERMIT NO: R30-03300014-2011

Dominion Transmission, Inc.
Law Compressor Station
Route 90, P.O. Box 190
Mc Whorter, WV 26401

NOVEMBER 2015

DOMINION TRANMISSION, INC.
LAW COMPRESSOR STATION

TITLE V PERMIT RENEWAL APPLICATION

TABLE OF CONTENTS

Title V Permit Application Checklist for Administrative Completeness Cross Reference

Section 1: Introduction

Section 2: Title V Renewal Permit Application – General Forms

ATTACHMENTS

Attachment A: Area Map

Attachment B: Plot Plan

Attachment C: Process Flow Diagrams

Attachment D: Title V Equipment Table

Attachment E: Emission Unit Forms

Attachment G: Air Pollution Control Device Form

Attachment H: Compliance Assurance Monitoring (CAM) Form

****Note:** There is no Attachment F for this permit application.

TITLE V PERMIT APPLICATION CHECKLIST FOR ADMINISTRATIVE COMPLETENESS

Requirement	Application
One signed copy of the application (per WVDEP email correspondence 4/16/15)	Enclosed – Section 2
Correct number of copies of the application on separate CDs or diskettes, (i.e. at least one disc per copy)	Enclosed – 2 CDs
*Table of Contents (needs to be included but not for administrative completeness)	Table of Contents
Facility Information	Section 1/Section 2
Description of process and products, including NAICS and SIC codes, and including alternative operating scenarios	Section 1 / Section 2: TV Renewal Application Form Section #14
Area map showing plant location	Attachment A
Plot plan showing buildings and process areas	Attachment B
Process flow diagram(s), showing all emission units, control equipment, emission points, and their relationships	Attachment C
Identification of all applicable requirements with a description of the compliance status, the methods used for demonstrating compliance, and a Schedule of Compliance Form (ATTACHMENT F) for all requirements for which the source is not in compliance	Not Applicable
Listing of all active permits and consent orders (if applicable)	Section 2: TV Renewal Application Form Section #21

Facility-wide emissions summary	Section 2: TV Renewal Application Form Section #23
Identification of Insignificant Activities	Section 2: TV Renewal Application Form Section #24
ATTACHMENT D – Title V Equipment Table completed for all emission units at the facility except those designated as insignificant activities	Attachment D
ATTACHMENT E – Emission Unit Form completed for each emission unit listed in the Title V Equipment Table (ATTACHMENT D) and a Schedule of Compliance Form (ATTACHMENT F) for all requirements for which the emission unit is not in compliance	Attachment E Attachment F not applicable
ATTACHMENT G – Air Pollution Control Device Form completed for each control device listed in the Title V Equipment Table (ATTACHMENT D)	Attachment G
ATTACHMENT H – Compliance Assurance Monitoring (CAM) Plan Form completed for each new control device for which the “Is the device subject to CAM?” question is answered “Yes” on the Air Pollution Control Device Form (ATTACHMENT G)	Attachment H
General Application Forms signed by a Responsible Official	Enclosed – Section 2
Confidential Information submitted in accordance with 45CSR31	Not Applicable

SECTION 1

Introduction

INTRODUCTION:

Law Station is a natural gas compressor station used to compress natural gas for Dominion Transmission, Inc.'s transmission pipeline system in West Virginia. Law Station is located in Good Hope, WV.

Law Station has the potential to emit in excess of 100 tons per year of nitrogen oxides (NOx) and 100 tons per year of volatile organic compounds (VOCs). The station is classified as a major stationary source under the West Virginia Department of Environmental Protection (WVDEP) Regulation (45 CSR Part 30) and is subject to the Title V Operating Permit provisions of Part 30. Law Station is also an area source of hazardous air pollutants (HAPs) since the potential to emit is less than 10 tons per year for individual HAPs and less than 25 tons per year of combined HAPs.

Law Station was originally issued a Title V Operating Permit (Permit No: R30-03300014-2006) in 2006 for a period of five (5) years, with an expiration date of July 27, 2011. Law Station is also subject to the underlying State Operating Permit (Rule 13 Permit No: R13-2963) and General Permit (Permit No: G60-C041). The Title V operating permit is for the operation of two (2) 660 hp natural gas fired reciprocating engines (EN01 and EN02), one (1) glycol dehydrator system (DEHY02) with flare (F1), one (1) dehydration unit reboiler (RBR02), two (2) 192.5 hp emergency generators (EG01 and EG02), one (1) 40 hp emergency air compressor (CPR02), and seven (7) above ground storage tanks of various sizes (TK01, TK02, and TK04 - TK08).

The last Title V renewal application was submitted in 2010, with the Title V Operating Permit Renewal being issued on May 24, 2011, with an expiration date of May 24, 2016.

PROCESS DESCRIPTION

Law Station is a compressor facility that services a natural gas pipeline system. The compressor engines (EN01 and EN02) at the facility receive natural gas flowing through a valve on the pipeline and recompresses that natural gas in order to further transport the natural gas through the pipeline system. Prior to exiting the facility through the pipeline, the compressed natural gas is processed by the dehydration unit (DEHY02). The dehydration unit removes moisture and impurities from the gas stream. Emergency backup power is supplied by emergency generators (EG01 and EG02).

The dehydration process begins with the compressed natural gas entering the unit and then being passed through a triethylene glycol dehydration system consisting of a contactor bed, a reboiler (RBR02), and associated equipment. As a result of this process, the natural gas is stripped of moisture and impurities, along with a small amount of hydrocarbons. The wet gas enters the contactor where moisture and some hydrocarbons are absorbed into the lean glycol. The glycol, which has become rich with absorbed moisture and hydrocarbons, is regenerated in the still column (DEHY02) using the heat generated from the natural gas-fired reboiler (RBR02) to liberate the moisture and hydrocarbon vapors. The regenerator vapors are vented to the flare (F1) to combust the hydrocarbons; thereby, reducing overall emissions and odor. The flare is permitted with a destruction efficiency of 95%. The compressed, dehydrated gas then enters the pipeline.

Listed below is a description of the equipment located at the Law Station:

Two (2) 660 hp Cooper GMXE-8 natural gas-fired reciprocating engines/integral compressors

- Emission unit ID: EN01 and EN02
- Emission point ID: EN01 and EN02

Two (2) 192.5 hp Cummins GGLA 7965803 emergency generators

- Emission unit ID: EG01 and EG02
- Emission point ID: EG01 and EG02

One (1) 0.771 MMBtu/hr Cameron natural gas-fired dehydration unit reboiler

- Emission unit ID: RBR02
- Emission point ID: RBR02

One (1) 9 MMscf/day dehydration unit/still column

- Emission unit ID: DEHY02
- Emission point ID: DEHY02

One (1) 4.0 MMBtu/hr dehydration unit controlled flare

- Emission unit ID: F1
- Emission point ID: F1

One (1) 40 hp Ford L8G-4231-6007-Z air compressor

- Emission unit ID: CPR02
- Emission point ID: CPR02

One (1) 4200 gallon vertical aboveground lube oil storage tank

- Emission unit ID: TK01
- Emission point ID: TK01

One (1) 4200 gallon vertical aboveground lube oil storage tank

- Emission unit ID: TK02
- Emission point ID: TK02

One (1) 1000 gallon vertical aboveground used oil storage tank

- Emission unit ID: TK04
- Emission point ID: TK04

One (1) 4200 gallon vertical aboveground produced fluids storage tank

- Emission unit ID: TK05
- Emission point ID: TK05

One (1) 500 gallon vertical aboveground wastewater storage tank

- Emission unit ID: TK06
- Emission point ID: TK06

One (1) 1000 gallon horizontal aboveground triethylene glycol storage tank

- Emission unit ID: TK07
- Emission point ID: TK07

One (1) 2000 gallon horizontal aboveground ethylene glycol storage tank

- Emission unit ID: TK08
- Emission point ID: TK08

SECTION 2

Title V Renewal Permit Application -
General Forms

WEST VIRGINIA DEPARTMENT OF ENVIRONMENTAL PROTECTION

DIVISION OF AIR QUALITY

601 57th Street SE

Charleston, WV 25304

Phone: (304) 926-0475

www.dep.wv.gov/daq

INITIAL/RENEWAL TITLE V PERMIT APPLICATION - GENERAL FORMS

Section 1: General Information

1. **Name of Applicant (As registered with the WV Secretary of State's Office):** Dominion Transmission, Inc.	**2. Facility Name or Location:** Camden Station
3. DAQ Plant ID No.: 0 3 3 — 0 0 0 1 4	**4. Federal Employer ID No. (FEIN):** 5 5 0 6 2 9 2 0 3

5. **Permit Application Type:**

☐ Initial Permit — When did operations commence? 1973

☒ Permit Renewal — What is the expiration date of the existing permit? 05/24/2016

☐ Update to Initial/Renewal Permit Application

6. Type of Business Entity:

☒ Corporation ☐ Governmental Agency ☐ LLC
☐ Partnership ☐ Limited Partnership

7. Is the Applicant the:

☐ Owner ☐ Operator ☒ Both

If the Applicant is not both the owner and operator, please provide the name and address of the other party.

_____

_____

_____

8. Number of onsite employees:

0

9. Governmental Code:

☒ Privately owned and operated; 0
☐ Federally owned and operated; 1
☐ State government owned and operated; 2
☐ County government owned and operated; 3
☐ Municipality government owned and operated; 4
☐ District government owned and operated; 5

10. Business Confidentiality Claims

Does this application include confidential information (per 45CSR31)? ☐ Yes ☒ No

If yes, identify each segment of information on each page that is submitted as confidential, and provide justification for each segment claimed confidential, including the criteria under 45CSR§31-4.1, and in accordance with the DAQ's *"PRECAUTIONARY NOTICE-CLAIMS OF CONFIDENTIALITY"* guidance.

11. Mailing Address		
Street or P.O. Box: 925 White Oaks Blvd.		
City: Bridgeport	**State:** WV	**Zip:** 26330
Telephone Number: (681) 842-3000	**Fax Number:** (681) 842-3323	

12. Facility Location		
Street: Two Lick Road	**City:** Good Hope	**County:** Harrison
UTM Easting: 545.88 km	**UTM Northing:** 4,335.35 km	**Zone:** ☒ 17 or ☐ 18
Directions: From Clarksburg, take Route 19 South through Good Hope for 11 miles. Turn right across iron bridge onto Two Lick Road. Go 1.1 miles then turn right through gate. Go 0.3 miles to station at top of hill.		
Portable Source? ☐ Yes ☒ No		
Is facility located within a nonattainment area? ☐ Yes ☒ No		**If yes, for what air pollutants?**
Is facility located within 50 miles of another state? ☒ Yes ☐ No		**If yes, name the affected state(s).** Pennsylvania Ohio
Is facility located within 100 km of a Class I Area[1]? ☒ Yes ☐ No **If no, do emissions impact a Class I Area[1]?** ☐ Yes ☐ No		**If yes, name the area(s).** Dolly Sobs Wilderness Area Otter Creek Wilderness Area

[1] *Class I areas include Dolly Sods and Otter Creek Wilderness Areas in West Virginia, and Shenandoah National Park and James River Face Wilderness Area in Virginia.*

13. Contact Information		
Responsible Official: Brian C. Sheppard		**Title:** Vice President, Pipeline Operations
Street or P.O. Box: 925 White Oaks Blvd.		
City: Bridgeport	**State:** WV	**Zip:** 26330
Telephone Number: (681) 842-3733	**Fax Number:** (681) 842-3323	
E-mail address: Brian.C.Sheppard@dom.com		
Environmental Contact: Rebekah Remick		**Title:** Environmental Consultant
Street or P.O. Box: 5000 Dominion Blvd.		
City: Glen Allen	**State:** VA	**Zip:** 23060
Telephone Number: (804) 273-3536	**Fax Number:** (804) 273-2964	
E-mail address: Rebekah.J.Remick@dom.com		
Application Preparer: Rebekah Remick		**Title:** Environmental Consultant
Company: Dominion Resources, Inc.		
Street or P.O. Box: 5000 Dominion Blvd.		
City: Glen Allen	**State:** VA	**Zip:** 23060
Telephone Number: (804) 273-3536	**Fax Number:** (804) 273-2964	
E-mail address: Rebekah.J.Remick@dom.com		

14. Facility Description

List all processes, products, NAICS and SIC codes for normal operation, in order of priority. Also list any process, products, NAICS and SIC codes associated with any alternative operating scenarios if different from those listed for normal operation.

Process	Products	NAICS	SIC
Natural Gas Compressor Station	N/A	486120	4922

Provide a general description of operations.

The Law Station is a compressor facility that services a natural gas pipeline system. The purpose of the facility is to recompress natural gas flowing through a pipeline for transportation. The reciprocating engines (EN01 and EN02) at the facility receive natural gas from a valve on a pipeline and compress it to enable further transportation in the pipeline.

15. Provide an **Area Map** showing plant location as **ATTACHMENT A**.

16. Provide a **Plot Plan(s)**, e.g. scaled map(s) and/or sketch(es) showing the location of the property on which the stationary source(s) is located as **ATTACHMENT B**. For instructions, refer to "Plot Plan - Guidelines."

17. Provide a detailed **Process Flow Diagram(s)** showing each process or emissions unit as **ATTACHMENT C**. Process Flow Diagrams should show all emission units, control equipment, emission points, and their relationships.

Section 2: Applicable Requirements

18. Applicable Requirements Summary	
Instructions: Mark all applicable requirements.	
☐ SIP	☐ FIP
☒ Minor source NSR (45CSR13)	☐ PSD (45CSR14)
☐ NESHAP (45CSR34)	☐ Nonattainment NSR (45CSR19)
☒ Section 111 NSPS	☒ Section 112(d) MACT standards
☐ Section 112(g) Case-by-case MACT	☐ 112(r) RMP
☐ Section 112(i) Early reduction of HAP	☐ Consumer/commercial prod. reqts., section 183(e)
☐ Section 129 Standards/Reqts.	☐ Stratospheric ozone (Title VI)
☐ Tank vessel reqt., section 183(f)	☐ Emissions cap 45CSR§30-2.6.1
☐ NAAQS, increments or visibility (temp. sources)	☐ 45CSR27 State enforceable only rule
☒ 45CSR4 State enforceable only rule	☐ Acid Rain (Title IV, 45CSR33)
☐ Emissions Trading and Banking (45CSR28)	☒ **C**ompliance **A**ssurance **M**onitoring (40CFR64)
☐ CAIR NO_x Annual Trading Program (45CSR39)	☐ CAIR NO_x Ozone Season Trading Program (45CSR40)
☐ CAIR SO_2 Trading Program (45CSR41)	

19. Non Applicability Determinations

List all requirements which the source has determined not applicable and for which a permit shield is requested. The listing shall also include the rule citation and the reason why the shield applies.

40 CFR Subpart JJJJ – The compressor engines (EN01 and EN02) and air compressor (CPR02) are not subject to this subpart since they were manufactured in 1973 and 1989, respectively, before the applicability date.

40 CFR 60 Subpart OOOO – This subpart does not apply to the facility since the facility is a gathering facility that does not have tanks, gas wells, centrifugal compressors, reciprocating compressors, and/or pneumatic controllers constructed, modified, or reconstructed after August 23, 2011.

40 CFR 63 Subpart HHH – This subpart does not apply to the facility since the facility is not a transmission or storage station and is not a major source of HAPs.

40 CFR 63 Subpart DDDDD – The reboiler (RBR02) is not subject to this subpart since it is exempt by §63.7491(h) and facility is not major source of HAPs.

40 CFR 63 Subpart JJJJJJ – The reboiler (RBR02) is not applicable to this subpart since it is considered a "process heater," which is excluded from the definition of "boiler".

40 CFR 64 CAM – The dehy unit (DEHY02) is not applicable to CAM since the unit is subject to NESHAP Subpart HH, which has provisions for compliance monitoring established after 1990 (exemption per 64.2(b)(1)(i)). In addition, since the R13-2963 permit specifies a "continuous compliance determination method" condition (e.g. continuously monitoring the flare using a thermocouple to detect the presence of a flame) which was included in the Title V permit, CAM does not apply (exemption per 64.2(b)(1)(vi)).

☐ Permit Shield

20. Facility-Wide Applicable Requirements

List all facility-wide applicable requirements. For each applicable requirement, include the underlying rule/regulation citation and/or construction permit with the condition number. (*Note: Title V permit condition numbers alone are not the underlying applicable requirements*).

45 CSR 6-3.1 – Open burning prohibited (TV 3.1.1)
45 CSR 6-3.2 – Open burning exemption (TV 3.1.2)
40 CFR Part 61 and 45 CSR 34 – Asbestos inspection and removal (TV 3.1.3)
State Only: 45 CSR 4-3.1 – No objectionable odors (TV 3.1.4)
45 CSR 11-5.2 – Standby plans for emergency episodes (TV 3.1.5)
WV Code 22-5-4 (a) (14) – The annual emission inventory reporting (TV 3.1.6)
40 CFR Part 82 Subpart F – Ozone depleting substances (TV 3.1.7)
40 CFR Part 68 – Risk Management Plan (TV 3.1.8)
45 CSR 13 – Operation and maintenance of air pollution control equipment (TV 3.1.9; R13-2963 4.1.3)
State Only: 45 CSR 17-3.1 – Fugitive particulate matter (TV 3.1.10)

☐ Permit Shield

For all facility-wide applicable requirements listed above, provide monitoring/testing / recordkeeping / reporting which shall be used to demonstrate compliance. If the method is based on a permit or rule, include the condition number and/or citation. (Note: Each requirement listed above must have an associated method of demonstrating compliance. If there is not already a required method in place, then a method must be proposed.)

45 CSR 6-3.1 – The permittee shall prohibit open burning (TV 3.1.1)
45 CSR 6-3.2 – The permittee shall notify if open burning occurs (TV 3.1.2)
40 CFR Part 61 and 45 CSR 34 – Prior to demolition/construction buildings will be inspected for asbestos (TV 3.1.3)
45 CSR 4 – Permittee shall maintain records of all odor complaints received (TV 3.1.4)
45 CSR 11 – Upon request by the Secretary, the permittee shall prepare a standby plan (TV 3.1.5)
WV 22-5-4 – The permittee shall submit annual emission inventory reports (TV 3.1.6)
40 CFR Part 82 Subpart F – The permittee will prohibit maintenance, service, or repair of appliances containing Ozone depleting substances (TV 3.1.7)
40 CFR Part 68 – Should the permittee become subject to 40 CFR Part 68, a RMP shall be submitted (TV 3.1.8)
45 CSR 13 – The permittee shall install, maintain, and operate control equipment properly for minimizing emissions (TV 3.1.9; R13-2963 4.1.3)
45 CSR 17 – The permittee will limit fugitive emissions from the facility by burning only pipeline quality natural gas (TV 3.1.10)
WV Code 22—5-4(a)(14-15) and 45 CSR 13 – Testing requirements (TV 3.3.1)
45 CSR 30 – Recordkeeping Requirements (TV 3.4)
45 CSR 30 – Reporting Requirements (TV 3.5)
45 CSR 30 - The permittee shall submit a certified emissions statement and pay fees annually (TV 3.5.4)
45 CSR 30 - The permittee shall submit semi-annual monitoring reports (TV 3.5.6)

Are you in compliance with all facility-wide applicable requirements? ☒ Yes ☐ No

If no, complete the **Schedule of Compliance Form** as **ATTACHMENT F**.

21. Active Permits/Consent Orders		
Permit or Consent Order Number	Date of Issuance MM/DD/YYYY	List any Permit Determinations that Affect the Permit *(if any)*
G60-C041	10/13/2011	N/A
R13-2963	04/03/2013	N/A

22. Inactive Permits/Obsolete Permit Conditions		
Permit Number	Date of Issuance	Permit Condition Number
N/A		

Section 3: Facility-Wide Emissions

23. Facility-Wide Emissions Summary [Tons per Year]	
Criteria Pollutants	Potential Emissions
Carbon Monoxide (CO)	5.50
Nitrogen Oxides (NO_X)	259.85
Lead (Pb)	N/A
Particulate Matter ($PM_{2.5}$)[1]	1.84
Particulate Matter (PM_{10})[1]	1.84
Total Particulate Matter (TSP)	2.34
Sulfur Dioxide (SO_2)	0.03
Volatile Organic Compounds (VOC)	96.94
Hazardous Air Pollutants[2]	Potential Emissions
Acetaldehyde	0.37
Acrolein	0.37
Benzene	0.27
Ethylbenzene	0.11
Formaldehyde	0.73
Hexane	0.14
Toluene	0.48
Xylene	0.66
Regulated Pollutants other than Criteria and HAP	Potential Emissions

[1]*$PM_{2.5}$ and PM_{10} are components of TSP.*
[2]*For HAPs that are also considered PM or VOCs, emissions should be included in both the HAPs section and the Criteria Pollutants section.*

Section 4: Insignificant Activities

24. Insignificant Activities (Check all that apply)		
☒	1.	Air compressors and pneumatically operated equipment, including hand tools.
☐	2.	Air contaminant detectors or recorders, combustion controllers or shutoffs.
☐	3.	Any consumer product used in the same manner as in normal consumer use, provided the use results in a duration and frequency of exposure which are not greater than those experienced by consumer, and which may include, but not be limited to, personal use items; janitorial cleaning supplies, office supplies and supplies to maintain copying equipment.
☒	4.	Bathroom/toilet vent emissions.
☒	5.	Batteries and battery charging stations, except at battery manufacturing plants.
☐	6.	Bench-scale laboratory equipment used for physical or chemical analysis, but not lab fume hoods or vents. Many lab fume hoods or vents might qualify for treatment as insignificant (depending on the applicable SIP) or be grouped together for purposes of description.
☐	7.	Blacksmith forges.
☒	8.	Boiler water treatment operations, not including cooling towers.
☐	9.	Brazing, soldering or welding equipment used as an auxiliary to the principal equipment at the source.
☐	10.	CO_2 lasers, used only on metals and other materials which do not emit HAP in the process.
☐	11.	Combustion emissions from propulsion of mobile sources, except for vessel emissions from Outer Continental Shelf sources.
☒	12.	Combustion units designed and used exclusively for comfort heating that use liquid petroleum gas or natural gas as fuel.
☒	13.	Comfort air conditioning or ventilation systems not used to remove air contaminants generated by or released from specific units of equipment.
☐	14.	Demineralized water tanks and demineralizer vents.
☐	15.	Drop hammers or hydraulic presses for forging or metalworking.
☐	16.	Electric or steam-heated drying ovens and autoclaves, but not the emissions from the articles or substances being processed in the ovens or autoclaves or the boilers delivering the steam.
☐	17.	Emergency (backup) electrical generators at residential locations.
☐	18.	Emergency road flares.
☐	19.	Emission units which do not have any applicable requirements and which emit criteria pollutants (CO, NO_x, SO_2, VOC and PM) into the atmosphere at a rate of less than 1 pound per hour and less than 10,000 pounds per year aggregate total for each criteria pollutant from all emission units. Please specify all emission units for which this exemption applies along with the quantity of criteria pollutants emitted on an hourly and annual basis: _____ _____ _____ _____ _____ _____ _____ _____ _____

24. Insignificant Activities (Check all that apply)		
☐	20.	Emission units which do not have any applicable requirements and which emit hazardous air pollutants into the atmosphere at a rate of less than 0.1 pounds per hour and less than 1,000 pounds per year aggregate total for all HAPs from all emission sources. This limitation cannot be used for any source which emits dioxin/furans nor for toxic air pollutants as per 45CSR27. Please specify all emission units for which this exemption applies along with the quantity of hazardous air pollutants emitted on an hourly and annual basis: _____ _____ _____ _____ _____
☐	21.	Environmental chambers not using hazardous air pollutant (HAP) gases.
☒	22.	Equipment on the premises of industrial and manufacturing operations used solely for the purpose of preparing food for human consumption.
☐	23.	Equipment used exclusively to slaughter animals, but not including other equipment at slaughterhouses, such as rendering cookers, boilers, heating plants, incinerators, and electrical power generating equipment.
☐	24.	Equipment used for quality control/assurance or inspection purposes, including sampling equipment used to withdraw materials for analysis.
☐	25.	Equipment used for surface coating, painting, dipping or spray operations, except those that will emit VOC or HAP.
☒	26.	Fire suppression systems.
☐	27.	Firefighting equipment and the equipment used to train firefighters.
☐	28.	Flares used solely to indicate danger to the public.
☒	29.	Fugitive emission related to movement of passenger vehicle provided the emissions are not counted for applicability purposes and any required fugitive dust control plan or its equivalent is submitted.
☐	30.	Hand-held applicator equipment for hot melt adhesives with no VOC in the adhesive formulation.
☒	31.	Hand-held equipment for buffing, polishing, cutting, drilling, sawing, grinding, turning or machining wood, metal or plastic.
☐	32.	Humidity chambers.
☐	33.	Hydraulic and hydrostatic testing equipment.
☐	34.	Indoor or outdoor kerosene heaters.
☒	35.	Internal combustion engines used for landscaping purposes.
☐	36.	Laser trimmers using dust collection to prevent fugitive emissions.
☐	37.	Laundry activities, except for dry-cleaning and steam boilers.
☐	38.	Natural gas pressure regulator vents, excluding venting at oil and gas production facilities.
☐	39.	Oxygen scavenging (de-aeration) of water.
☐	40.	Ozone generators.

24. Insignificant Activities (Check all that apply)		
☒	41.	Plant maintenance and upkeep activities (e.g., grounds-keeping, general repairs, cleaning, painting, welding, plumbing, re-tarring roofs, installing insulation, and paving parking lots) provided these activities are not conducted as part of a manufacturing process, are not related to the source's primary business activity, and not otherwise triggering a permit modification. (Cleaning and painting activities qualify if they are not subject to VOC or HAP control requirements. Asphalt batch plant owners/operators must still get a permit if otherwise requested.)
☐	42.	Portable electrical generators that can be moved by hand from one location to another. "Moved by Hand" means that it can be moved without the assistance of any motorized or non-motorized vehicle, conveyance, or device.
☐	43.	Process water filtration systems and demineralizers.
☒	44.	Repair or maintenance shop activities not related to the source's primary business activity, not including emissions from surface coating or de-greasing (solvent metal cleaning) activities, and not otherwise triggering a permit modification.
☒	45.	Repairs or maintenance where no structural repairs are made and where no new air pollutant emitting facilities are installed or modified.
☐	46.	Routing calibration and maintenance of laboratory equipment or other analytical instruments.
☐	47.	Salt baths using nonvolatile salts that do not result in emissions of any regulated air pollutants. Shock chambers.
☐	48.	Shock chambers.
☐	49.	Solar simulators.
☐	50.	Space heaters operating by direct heat transfer.
☐	51.	Steam cleaning operations.
☐	52.	Steam leaks.
☐	53.	Steam sterilizers.
☐	54.	Steam vents and safety relief valves.
☐	55.	Storage tanks, reservoirs, and pumping and handling equipment of any size containing soaps, vegetable oil, grease, animal fat, and nonvolatile aqueous salt solutions, provided appropriate lids and covers are utilized.
☐	56.	Storage tanks, vessels, and containers holding or storing liquid substances that will not emit any VOC or HAP. Exemptions for storage tanks containing petroleum liquids or other volatile organic liquids should be based on size limits such as storage tank capacity and vapor pressure of liquids stored and are not appropriate for this list.
☐	57.	Such other sources or activities as the Director may determine.
☐	58.	Tobacco smoking rooms and areas.
☐	59.	Vents from continuous emissions monitors and other analyzers.

Section 5: Emission Units, Control Devices, and Emission Points

25. Equipment Table
Fill out the **Title V Equipment Table** and provide it as **ATTACHMENT D**.
26. Emission Units
For each emission unit listed in the **Title V Equipment Table**, fill out and provide an **Emission Unit Form** as **ATTACHMENT E**.
For each emission unit not in compliance with an applicable requirement, fill out a **Schedule of Compliance Form** as **ATTACHMENT F**.
27. Control Devices
For each control device listed in the **Title V Equipment Table**, fill out and provide an **Air Pollution Control Device Form** as **ATTACHMENT G**.
For any control device that is required on an emission unit in order to meet a standard or limitation for which the potential pre-control device emissions of an applicable regulated air pollutant is greater than or equal to the Title V Major Source Threshold Level, refer to the **Compliance Assurance Monitoring (CAM) Form(s)** for CAM applicability. Fill out and provide these forms, if applicable, for each Pollutant Specific Emission Unit (PSEU) as **ATTACHMENT H**.

Section 6: Certification of Information

28. Certification of Truth, Accuracy and Completeness and Certification of Compliance

*Note: This Certification must be signed by a responsible official. The **original**, signed in **blue ink**, must be submitted with the application. Applications without an **original** signed certification will be considered as incomplete.*

a. Certification of Truth, Accuracy and Completeness

I certify that I am a responsible official (as defined at 45CSR§30-2.38) and am accordingly authorized to make this submission on behalf of the owners or operators of the source described in this document and its attachments. I certify under penalty of law that I have personally examined and am familiar with the statements and information submitted in this document and all its attachments. Based on my inquiry of those individuals with primary responsibility for obtaining the information, I certify that the statements and information are to the best of my knowledge and belief true, accurate, and complete. I am aware that there are significant penalties for submitting false statements and information or omitting required statements and information, including the possibility of fine and/or imprisonment.

b. Compliance Certification

Except for requirements identified in the Title V Application for which compliance is not achieved, I, the undersigned hereby certify that, based on information and belief formed after reasonable inquiry, all air contaminant sources identified in this application are in compliance with all applicable requirements.

Responsible official (type or print)

Name: Brian C. Sheppard	Title: Vice President, Pipeline Operations

Responsible official's signature:

Signature: _____ Signature Date: 11-16-15
(Must be signed and dated in blue ink)

Note: Please check all applicable attachments included with this permit application:

☒	ATTACHMENT A: Area Map
☒	ATTACHMENT B: Plot Plan(s)
☒	ATTACHMENT C: Process Flow Diagram(s)
☒	ATTACHMENT D: Equipment Table
☒	ATTACHMENT E: Emission Unit Form(s)
☐	ATTACHMENT F: Schedule of Compliance Form(s)
☒	ATTACHMENT G: Air Pollution Control Device Form(s)
☒	ATTACHMENT H: Compliance Assurance Monitoring (CAM) Form(s)

All of the required forms and additional information can be found and downloaded from, the DEP website at www.dep.wv.gov/daq, requested by phone (304) 926-0475, and/or obtained through the mail.

Attachment A

Area Map

2 Lick Run
Two Lick Creek
19/18
Two Lick Creek
2 Lick Run
Two Lick Creek
19/18
19/18
West Fork River
Frishe
Good Hope
Animal Hospital
Two Lick Creek
Map
Google

Attachment B

Plot Plan

SCALE N.T.S.	DATE	Dominion Transmission, Inc. 445 West Main St. Clarksburg, West Virginia 26301 / Phone: (304) 623-8000			
DRAWN SE TECH		FOR: LAW COMPRESSOR STATION			
CHECKED		TITLE: ENVIRONMENTAL EMERGENCY SITE PLAN			
APP. FOR BID					
APP. FOR CONST.		DIR:	GROUP	DWG. NO.	REV.
TOWN:	CNTY:	FILE: PRJ/TSK:	PD	W6102B	1

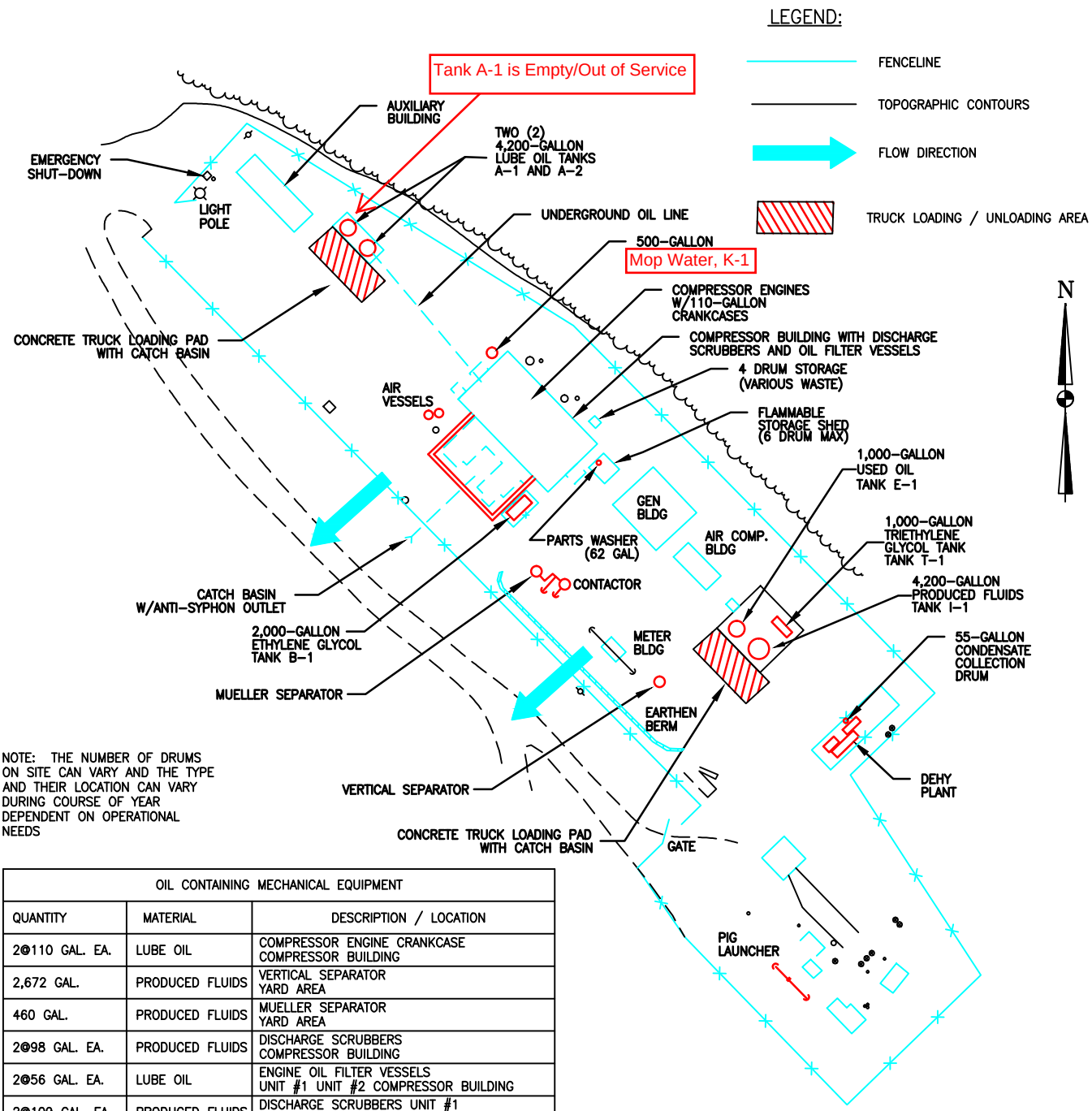

NOTE: THE NUMBER OF DRUMS ON SITE CAN VARY AND THE TYPE AND THEIR LOCATION CAN VARY DURING COURSE OF YEAR DEPENDENT ON OPERATIONAL NEEDS

OIL CONTAINING MECHANICAL EQUIPMENT		
QUANTITY	MATERIAL	DESCRIPTION / LOCATION
2@110 GAL. EA.	LUBE OIL	COMPRESSOR ENGINE CRANKCASE COMPRESSOR BUILDING
2,672 GAL.	PRODUCED FLUIDS	VERTICAL SEPARATOR YARD AREA
460 GAL.	PRODUCED FLUIDS	MUELLER SEPARATOR YARD AREA
2@98 GAL. EA.	PRODUCED FLUIDS	DISCHARGE SCRUBBERS COMPRESSOR BUILDING
2@56 GAL. EA.	LUBE OIL	ENGINE OIL FILTER VESSELS UNIT #1 UNIT #2 COMPRESSOR BUILDING
2@109 GAL. EA.	PRODUCED FLUIDS	DISCHARGE SCRUBBERS UNIT #1 & UNIT #2 COMPRESSOR BUILDING

REFERENCE:
AERIAL MAPPING BY KEDDAL AERIAL MAPPING, JULY,2000.
WITH GROUND CONTROL BY MSES CONSULTANTS, INC., FEBRUARY 24, 2000.
DRAWING CAD FILE NO. 0-105-1 / DISK 1550.

SOURCE OF ELEVATION:
ROAD INTERSECTION SOUTHEAST OF STATION SITE, ELEVATION 1006.00'.

Wsheet.dwg 06/05/00 10:15 SHP

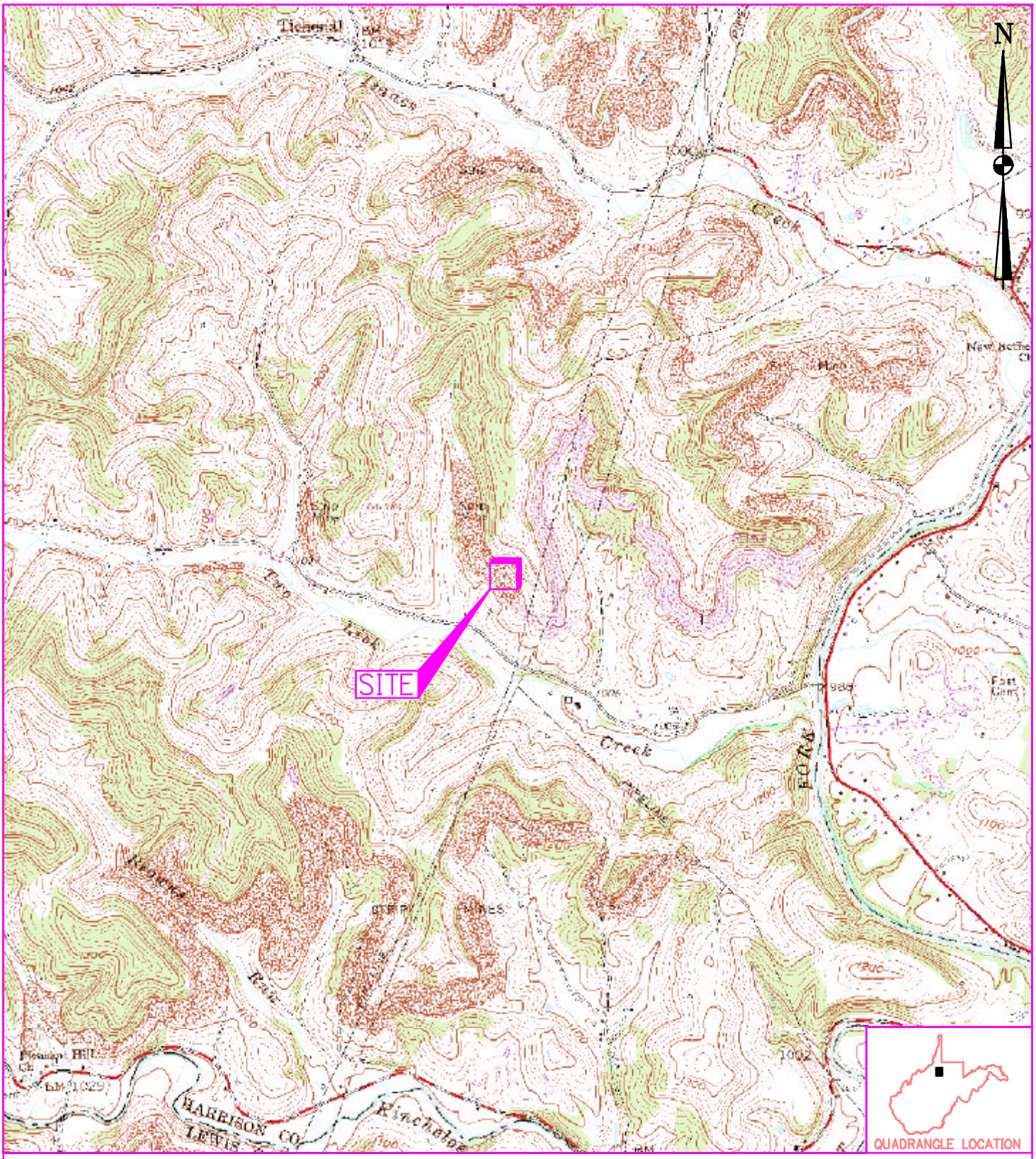

REFERENCE: USGS 7.5' QUADRANGLE MAP OF: WEST MILFORD, WEST VIRGINIA; DATED 1961, PHOTOREVISED 1976.

DRAWN BY	DJF
DATE	
CHECKED BY	
SET JOB NO.	202059
SET DWG FILE	LAWm01.dwg
DRAWING SCALE	1"=2000'

SE TECHNOLOGIES
98 Vanadium Road Bridgeville, PA 15017 (412) 221-1100

DOMINION TRANSMISSION

LAW COMPRESSOR STATION
UNION DISTRICT
HARRISON COUNTY, WEST VIRGINIA
SITE LOCATION MAP

DRAWING NO.	REV.
FIGURE 1	0

Plot: env045 06/17/2002 14:08 G:\DOMINION\202059\LAWm01.dwg

Attachment C

Process Flow Diagrams

Dominion Transmission, Inc.

Law Compressor Station

Compressor Engines (EN01 and EN02) Process Flow Diagram

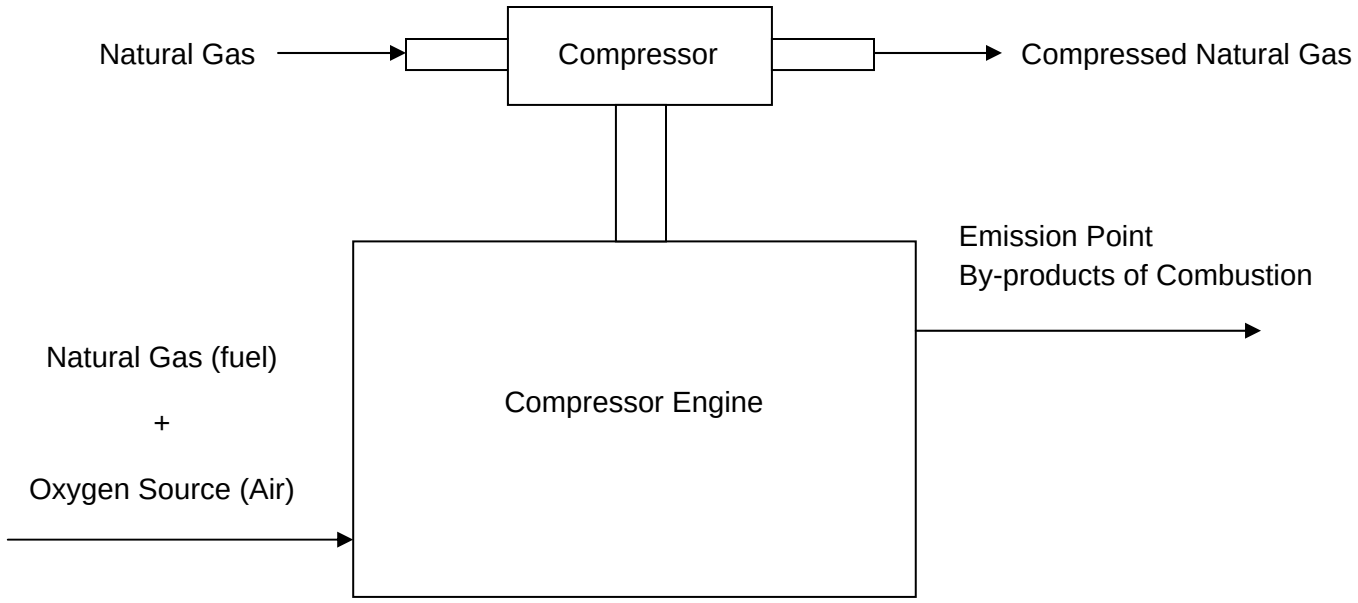

Dominion Transmission, Inc.

Law Compressor Station

Emergency Generators (EG01 and EG02) Process Flow Diagram

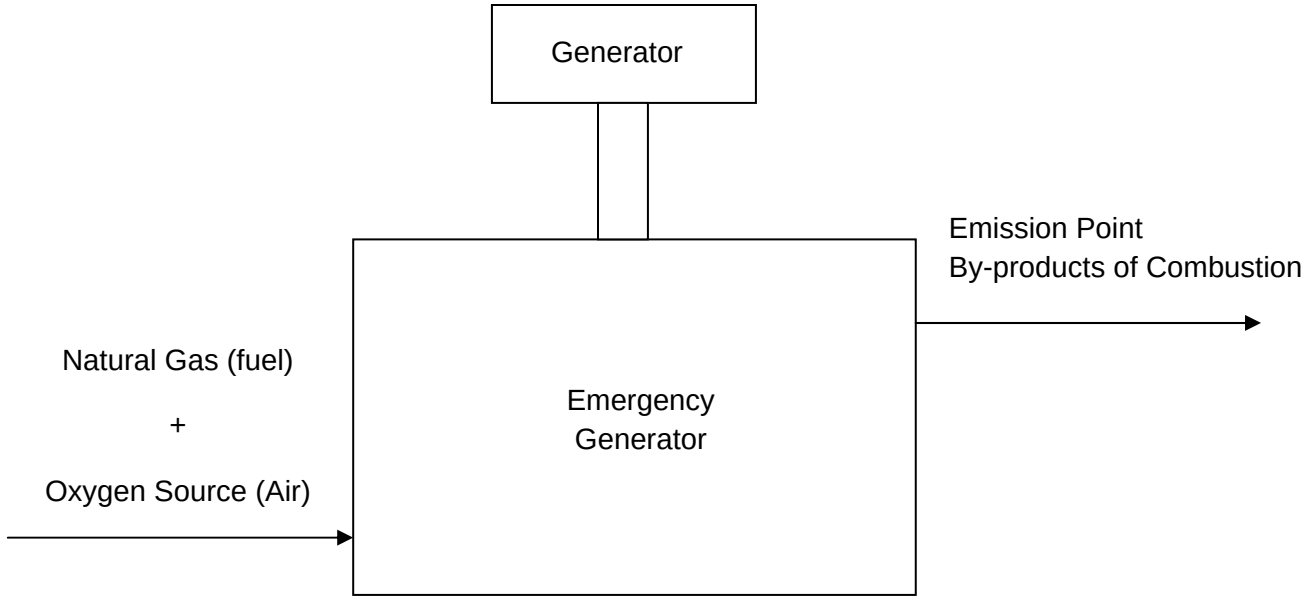

Dominion Transmission, Inc.

Law Compressor Station

Emergency Air Compressor (CPR02) Process Flow Diagram

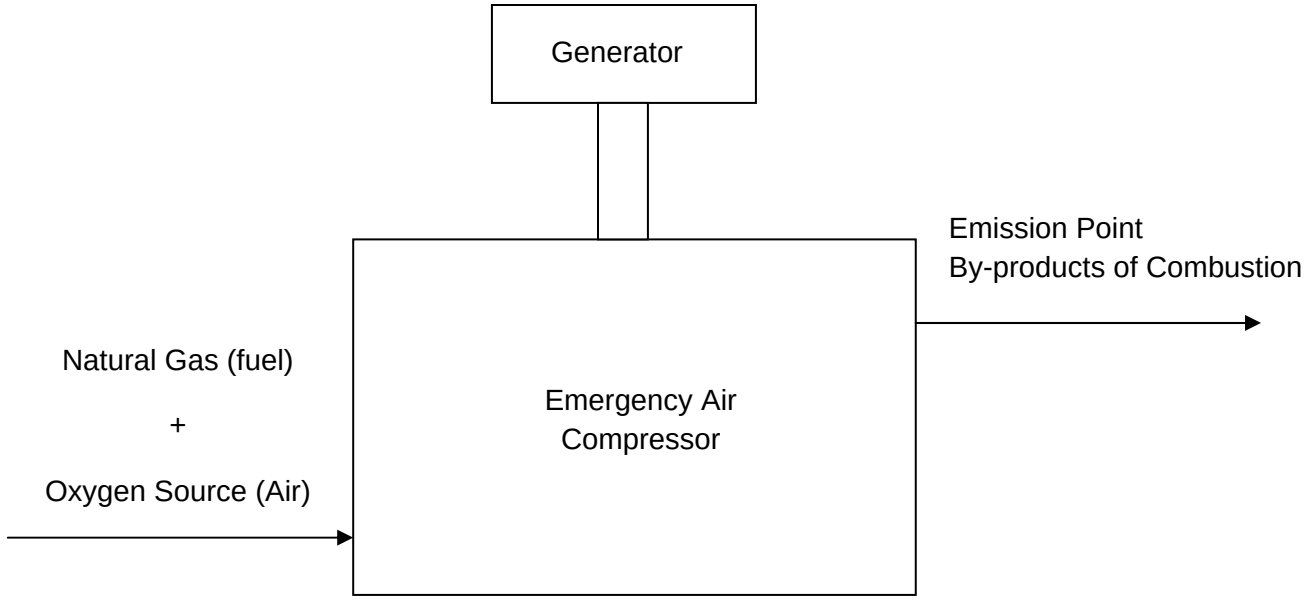

Dominion Transmission, Inc.

Law Compressor Station

Reboiler (RBR02) Process Flow Diagram

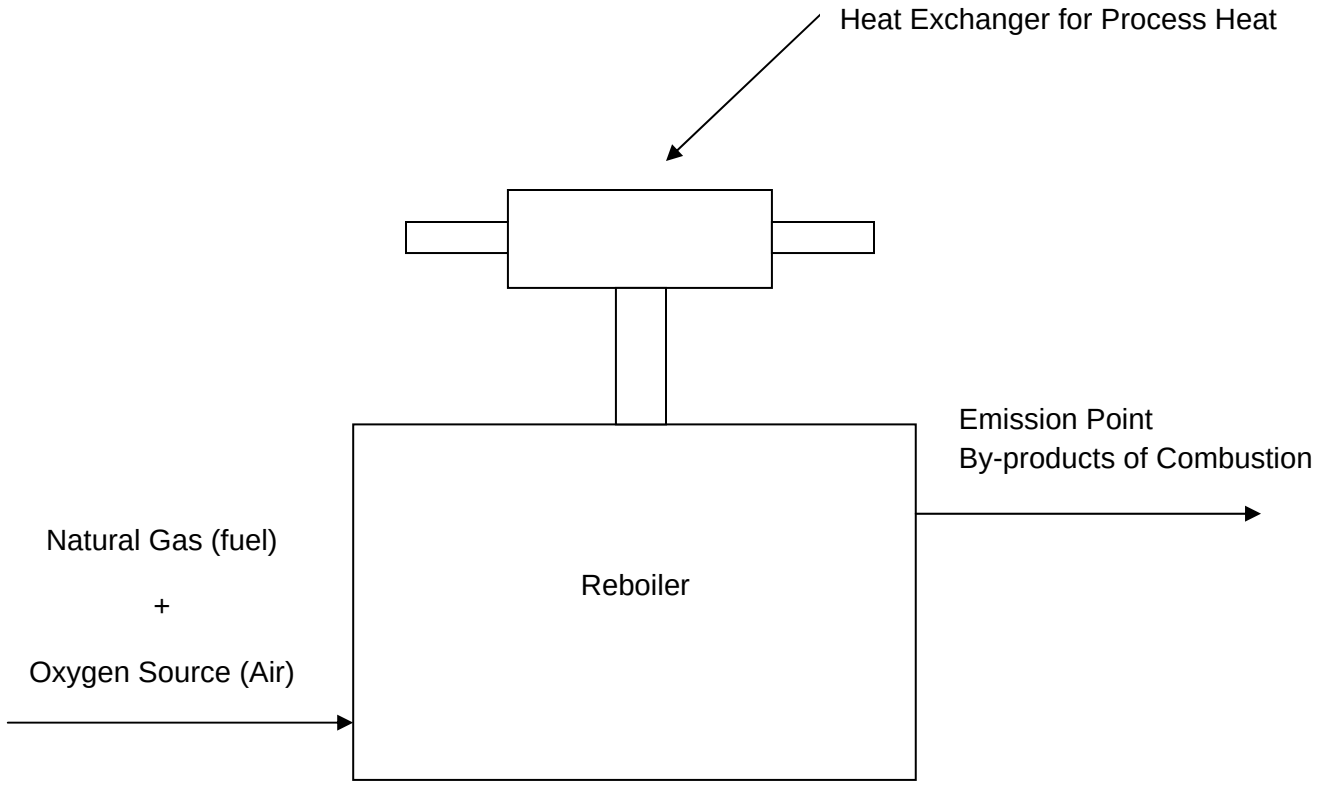

Dominion Transmission, Inc.

Law Compressor Station

Dehydration Unit (F1, DEHY02, and RBR02) Process Flow Diagram

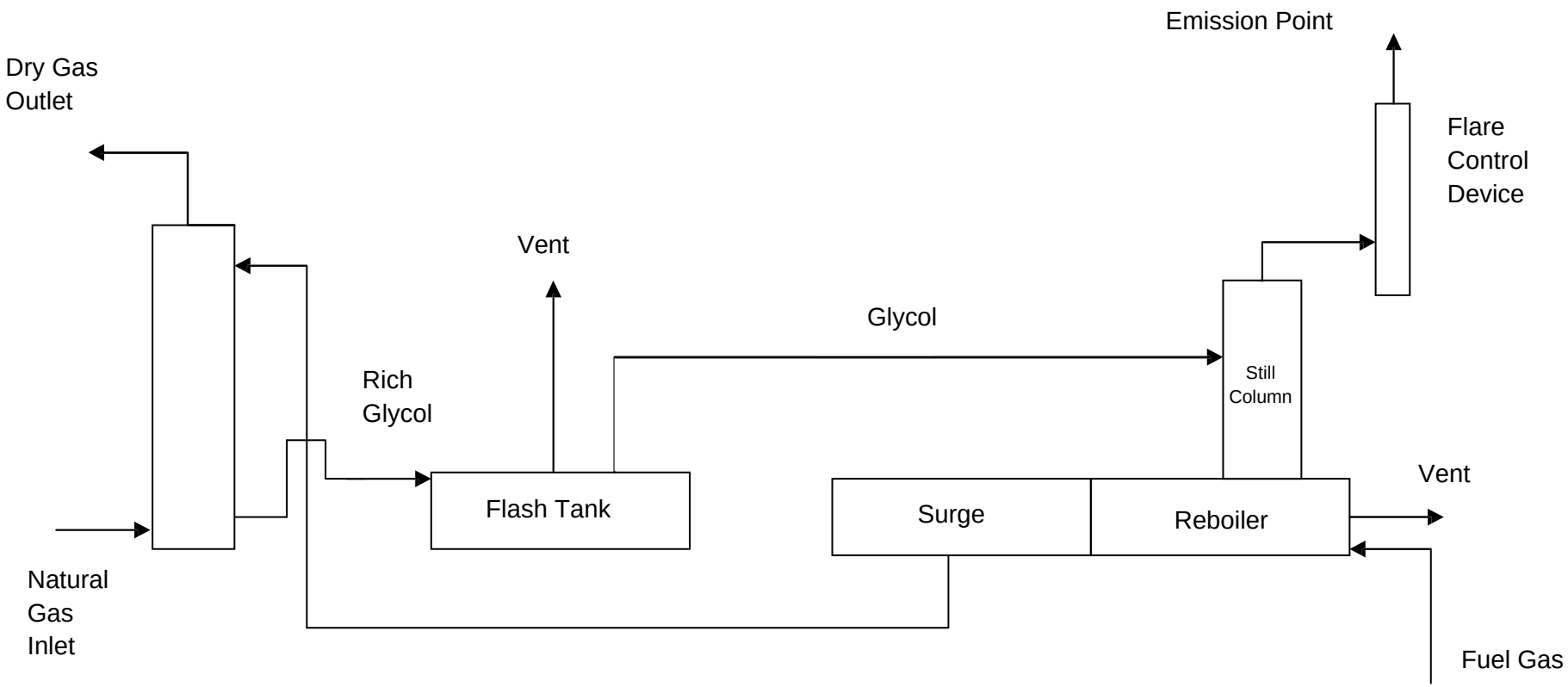

Attachment D

Title V Equipment Table

ATTACHMENT D - Title V Equipment Table

(includes all emission units at the facility except those designated as insignificant activities in Section 4, Item 24 of the General Forms)

Emission Point ID[1]	Control Device[1]	Emission Unit ID[1]	Emission Unit Description	Design Capacity	Year Installed/ Modified
EN01	N/A	EN01	Reciprocating Engine/Integral Compressor; Cooper GMXE-8	660 hp	1973
EN02	N/A	EN02	Reciprocating Engine/Integral Compressor; Cooper GMXE-8	660 hp	1973
EG01	N/A	EG01	Cummins GM8.1L	192.5 hp	2012
EG02	N/A	EG02	Cummins GM8.1L	192.5 hp	2012
DEHY02	F1	DEHY02	Dehydration Unit Still; Cameron	9 MMscf/day	2013
RBR02	N/A	RBR02	Dehydration Unit Boiler; Cameron	0.77 MMBtu/hr	2013
F1	N/A	F1	Dehydration Unit Flare; QTI, Q100	4.0 MMBtu/hr	2013
TK01	N/A	TK01	Vertical, aboveground tank containing lube oil	4,200 Gallons	1973
TK02	N/A	TK02	Vertical, aboveground tank containing lube oil	4,200 Gallons	1973
TK03	N/A	TK03	Horizontal, aboveground tank containing drip gas	2,000 Gallons	1989
TK04	N/A	TK04	Vertical, aboveground tank containing used oil	5,075 Gallons	1972
TK05	N/A	TK05	Vertical, aboveground tank containing produced fluids	4,200 Gallons	1973
TK06	N/A	TK06	Vertical, aboveground tank containing wastewater	500 Gallons	2003
TK07	N/A	TK07	Horizontal, aboveground tank containing triethylene glycol	1,000 Gallons	1973
New units (updates) to equipment list:					
CPR02	N/A	CPR02	Emergency Air Compressor; Ford L8G-4231-6007-Z	40 hp	1989
TK08	N/A	TK08	Horizontal, aboveground tank containing ethylene glycol	2,000 Gallons	1986
Units that have been removed:					
CPR01	N/A	CPR01	Air Compressor; Ingersoll Rand 15-T	15 hp	1990
TK03	N/A	TK03	Horizontal, aboveground tank containing drip gas	2,000 Gallons	1989

[1]For 45CSR13 permitted sources, the numbering system used for the emission points, control devices, and emission units should be consistent with the numbering system used in the 45CSR13 permit. For grandfathered sources, the numbering system should be consistent with registrations or emissions inventory previously submitted to DAQ. For emission points, control devices, and emissions units which have not been previously labeled, use the following 45CSR13 numbering system: 1S, 2S, 3S,... or other appropriate description for emission units; 1C, 2C, 3C,... or other appropriate designation for control devices; 1E, 2E, 3E, ... or other appropriate designation for emission points.

Attachment E

Emission Unit Forms

ATTACHMENT E - Emission Unit Form

Emission Unit Description

Emission unit ID number:	**Emission unit name:**	**List any control devices associated with this emission unit:**
CPR02	Emergency Air Compressor	N/A

Provide a description of the emission unit (type, method of operation, design parameters, etc.):

Natural gas-fired emergency air compressor

Manufacturer:	**Model number:**	**Serial number:**
Ford	L8G-4231-6007-Z	10277 C-13-TR
Construction date:	**Installation date:**	**Modification date(s):**
	1989	N/A

Design Capacity (examples: furnaces - tons/hr, tanks - gallons):
40 hp

Maximum Hourly Throughput:	**Maximum Annual Throughput:**	**Maximum Operating Schedule:**
400 cf/hr	0.20 MMcf/yr	500 hrs/yr

Fuel Usage Data **(fill out all applicable fields)**

Does this emission unit combust fuel? _X__Yes ___ No	**If yes, is it?** ___ Indirect Fired _X__Direct Fired
Maximum design heat input and/or maximum horsepower rating: 40 hp	**Type and Btu/hr rating of burners:** 0.40 MMBtu/hr

List the primary fuel type(s) and if applicable, the secondary fuel type(s). For each fuel type listed, provide the maximum hourly and annual fuel usage for each.

Natural gas
- Maximum hourly fuel usage = 400 cf/hr
- Maximum annual fuel usage = 0.20 MMcf/yr

Describe each fuel expected to be used during the term of the permit.

Fuel Type	Max. Sulfur Content	Max. Ash Content	BTU Value
Natural gas	20 gr sulfur/100 cf	N/A	1,000 Btu/cf

Emissions Data		
Criteria Pollutants	Potential Emissions	
	PPH	TPY
Carbon Monoxide (CO)	1.49	0.37
Nitrogen Oxides (NO_X)	0.91	0.23
Lead (Pb)	N/A	N/A
Particulate Matter ($PM_{2.5}$)	< 0.01	< 0.01
Particulate Matter (PM_{10})	< 0.01	< 0.01
Total Particulate Matter (TSP)	0.01	< 0.01
Sulfur Dioxide (SO_2)	< 0.01	< 0.01
Volatile Organic Compounds (VOC)	0.01	< 0.01
Hazardous Air Pollutants	Potential Emissions	
	PPH	TPY
Acetaldehyde	< 0.01	< 0.01
Acrolein	< 0.01	< 0.01
Benzene	< 0.01	< 0.01
Ethylbenzene	< 0.01	< 0.01
Formaldehyde	< 0.01	< 0.01
Toluene	< 0.01	< 0.01
Xylene	< 0.01	< 0.01
Regulated Pollutants other than Criteria and HAP	Potential Emissions	
	PPH	TPY

List the method(s) used to calculate the potential emissions (include dates of any stack tests conducted, versions of software used, source and dates of emission factors, etc.).

- NOx and CO emissions calculated from AP-42, Section 3.2, Natural Gas-Fired Reciprocating Engines, Table 3.2-3, 7/00 (worst case factors)
- PM, SO2, VOC, and HAP emissions calculated from AP-42, Section 3.2, Natural Gas-Fired Reciprocating Engines, Table 3.2-3, 7/00

Applicable Requirements
List all applicable requirements for this emission unit. For each applicable requirement, include the underlying rule/regulation citation and/or <u>construction permit</u> with the condition number. (*Note: Title V permit condition numbers alone are not the underlying applicable requirements*). If an emission limit is calculated based on the type of source and design capacity or if a standard is based on a design parameter, this information should also be included. 40 CFR Part 63 Subpart ZZZZ – NESHAP maintenance requirements 40 CFR Part 63 Subpart ZZZZ – NESHAP general requirements/provisions 40 CFR Part 63 Subpart ZZZZ – NESHAP monitoring requirements 40 CFR Part 63 Subpart ZZZZ – NESHAP recordkeeping requirements 40 CFR Part 63 Subpart ZZZZ – NESHAP reporting requirements
____ Permit Shield
For all applicable requirements listed above, provide monitoring/testing/recordkeeping/reporting which shall be used to demonstrate compliance. If the method is based on a permit or rule, include the condition number or citation. (Note: Each requirement listed above must have an associated method of demonstrating compliance. If there is not already a required method in place, then a method must be proposed.) 40 CFR 63.6595(a)(1), 63.6603(a), Table 2d, and 63.10(b)(1) – Change oil and filter, inspect spark plugs, and inspect all hoses and belts every 4,320 hours of operation or annually, whichever comes first. 40 CFR 63.6625(e)(3), 63.6640(a), 63.6605, and Table 6 – Operate and maintain the RICE according to the manufacturer's instructions OR develop and follow your own maintenance plan. 40 CFR 63.6625(f) – Equip the engine with a non-resettable hour meter. 40 CFR 63.6640(f) – Comply with emergency engine requirements. 40 CFR 63.6640, 63.6655, and 63.10(b) – Comply with all recordkeeping requirements.
Are you in compliance with all applicable requirements for this emission unit? _X__Yes ___No If no, complete the **Schedule of Compliance Form** as **ATTACHMENT F**.

ATTACHMENT E - Emission Unit Form

Emission Unit Description

Emission unit ID number:	**Emission unit name:**	**List any control devices associated with this emission unit:**
DEHY02	DEHY02 Dehydration Unit	F1

Provide a description of the emission unit (type, method of operation, design parameters, etc.):

Dehydration unit still column

Manufacturer:	**Model number:**	**Serial number:**
Cameron	300/550	
Construction date:	**Installation date:**	**Modification date(s):**
2013	2013	N/A

Design Capacity (examples: furnaces - tons/hr, tanks - gallons):
9 MMscf wet gas /day

Maximum Hourly Throughput:	**Maximum Annual Throughput:**	**Maximum Operating Schedule:**
9 MMscf wet gas /day	3,285 MMscf wet gas/yr	8760 hrs/yr

Fuel Usage Data **(fill out all applicable fields)**

Does this emission unit combust fuel? ___Yes _X__ No	**If yes, is it?** ___ Indirect Fired ___Direct Fired
Maximum design heat input and/or maximum horsepower rating: N/A	**Type and Btu/hr rating of burners:**

List the primary fuel type(s) and if applicable, the secondary fuel type(s). For each fuel type listed, provide the maximum hourly and annual fuel usage for each.

Natural gas
- Maximum hourly wet gas throughput = 9 MMscf/day
- Maximum annual wet gas throughput = 3,285 MMscf/yr

Describe each fuel expected to be used during the term of the permit.

Fuel Type	Max. Sulfur Content	Max. Ash Content	BTU Value
Natural gas	20 gr sulfur/100 cf	N/A	1,000 Btu/cf

Emissions Data		
Criteria Pollutants	Potential Emissions	
	PPH	TPY
Carbon Monoxide (CO)	0.02	0.09
Nitrogen Oxides (NO_X)	0.12	0.50
Lead (Pb)	N/A	N/A
Particulate Matter ($PM_{2.5}$)	< 0.01	< 0.01
Particulate Matter (PM_{10})	< 0.01	< 0.01
Total Particulate Matter (TSP)	< 0.01	< 0.01
Sulfur Dioxide (SO_2)	< 0.01	< 0.01
Volatile Organic Compounds (VOC)	2.43	10.64
Hazardous Air Pollutants	Potential Emissions	
	PPH	TPY
Benzene	0.040	0.177
Ethylbenzene	0.024	0.105
n-Hexane	0.026	0.115
Toluene	0.098	0.431
Xylenes	0.149	0.651
Regulated Pollutants other than Criteria and HAP	Potential Emissions	
	PPH	TPY

List the method(s) used to calculate the potential emissions (include dates of any stack tests conducted, versions of software used, source and dates of emission factors, etc.).

VOC and HAP emission rates for the dehydration unit were obtained from GRI GLYCalc V4.0 with a 95% destruction efficiency
NOx, CO, and VOC emission factors for the flare were obtained from Table 13.5-1 of AP-42

Applicable Requirements
List all applicable requirements for this emission unit. For each applicable requirement, include the underlying rule/regulation citation and/or <u>construction permit</u> with the condition number. (*Note: Title V permit condition numbers alone are not the underlying applicable requirements*). If an emission limit is calculated based on the type of source and design capacity or if a standard is based on a design parameter, this information should also be included. 45 CSR 13 – SO2 emissions shall not exceed 2,000 ppm by volume (TV 5.1.6) 45 CSR 13 – H2S emissions shall not exceed 50 gr/100cf (TV 5.1.7) 45 CSR 13 – 40 CFR 63 Subpart HH Benzene exemption requirements (TV 5.1.8, TV 5.1.14, R13-2963 6.1.7) 45 CSR 13 – Maximum Emission Limits (TV 5.1.9, R13-2963 6.1.1) 45 CSR 13 – The maximum wet natural gas shall not exceed 9 MMcf/day (TV 5.1.10, R13-2963 6.1.2) 40 CFR 63.760(f)(6) – Compliance with NESHAP HH is required upon initial start-up (TV 5.1.13) 40 CFR 63.764(a) – Compliance with 40 CFR, Part 63, Subpart A, as listed in Table 2 of NESHAP HH (TV 5.1.15, R13-2963 6.1.8) 40 CFR 63.772(b)(2) – Procedures for determining benzene emissions for exemption under 40 CFR 63.764(e)(1) (TV 5.1.16, R13-2963 6.1.9)
____ Permit Shield
For all applicable requirements listed above, provide monitoring/testing/recordkeeping/reporting which shall be used to demonstrate compliance. If the method is based on a permit or rule, include the condition number or citation. (Note: Each requirement listed above must have an associated method of demonstrating compliance. If there is not already a required method in place, then a method must be proposed.) 45 CSR 30-5.1.c - Compliance with TV 5.1.5 and 5.1.14 will be demonstrated by using GLYCalc V3 or higher and monitoring actual operating parameters (TV 5.2.1, R13-2963 6.2.1) 45 CSR 30-5.1(c) – SO_2 emissions shall be complied with by annual sampling of inlet natural gas stream (TV 5.2.3) 45 CSR 30-5.1(c) – H_2S emissions shall be complied with by annual sampling of inlet natural gas stream (TV 5.2.4) 45 CSR 13 – Wet Gas Throughput shall be monitored on a daily and monthly basis (TV 5.2.12, R13-2963 6.2.2) 45 CSR 13 – Wet Gas Sampling (TV 5.3.1, R13-2963 6.3.1) 45 CSR 13 – Facility-wide HAP emission calculations shall be maintained to demonstrate compliance with TV 5.1.5 (TV 5.4.2, R13-2963 4.4.4) 45 CSR 13 – Wet gas throughput records shall be maintained to demonstrate compliance with TV 5.1.10 (TV 5.4.4, R13-2963 6.4.2) 40 CFR 63.774(d)(1)(ii) – Maintain records of the actual benzene emissions (TV 5.4.9, R13-2963 6.4.7) 40 CFR 63.775(d) – NESHAP HH reports (TV 5.5.7, R13-2963 6.5.5)
Are you in compliance with all applicable requirements for this emission unit? _X__Yes ___No If no, complete the **Schedule of Compliance Form** as **ATTACHMENT F**.

ATTACHMENT E - Emission Unit Form

Emission Unit Description

Emission unit ID number:	**Emission unit name:**	**List any control devices associated with this emission unit:**
EG01	Emergency Generator	NSCR – Non-Selective Catalytic Reducer

Provide a description of the emission unit (type, method of operation, design parameters, etc.):

Natural gas-fired emergency auxiliary generator

Manufacturer:	**Model number:**	**Serial number:**
Cummins	GM8.1L (Engine) GGLA 7965803 (GenSet)	I110250720
Construction date:	**Installation date:**	**Modification date(s):**
2011	2012	N/A

Design Capacity (examples: furnaces - tons/hr, tanks - gallons):
192.5 hp / 1800 rpm

Maximum Hourly Throughput:	**Maximum Annual Throughput:**	**Maximum Operating Schedule:**
1,667 cf/hr	0.834 MMcf/yr	500 hrs/yr

Fuel Usage Data **(fill out all applicable fields)**

Does this emission unit combust fuel? _X__Yes ___ No	**If yes, is it?** ___ Indirect Fired _X__Direct Fired
Maximum design heat input and/or maximum horsepower rating: 192.5 hp / 1800 rpm	**Type and Btu/hr rating of burners:** 1.667 MMBtu/hr

List the primary fuel type(s) and if applicable, the secondary fuel type(s). For each fuel type listed, provide the maximum hourly and annual fuel usage for each.

Natural gas
- Maximum hourly fuel usage = 1,667 cf/hr
- Maximum annual fuel usage = 0.834 MMcf/yr

Describe each fuel expected to be used during the term of the permit.

Fuel Type	Max. Sulfur Content	Max. Ash Content	BTU Value
Natural gas	20 gr sulfur/100 cf	N/A	1,000 Btu/cf

Emissions Data		
Criteria Pollutants	Potential Emissions	
	PPH	TPY
Carbon Monoxide (CO)	0.39	0.10
Nitrogen Oxides (NO_X)	0.03	0.01
Lead (Pb)	N/A	N/A
Particulate Matter ($PM_{2.5}$)	0.02	< 0.01
Particulate Matter (PM_{10})	0.02	< 0.01
Total Particulate Matter (TSP)	0.03	0.01
Sulfur Dioxide (SO_2)	< 0.01	< 0.01
Volatile Organic Compounds (VOC)	0.19	0.05
Hazardous Air Pollutants	Potential Emissions	
	PPH	TPY
Acetaldehyde	< 0.01	< 0.01
Acrolein	< 0.01	< 0.01
Benzene	< 0.01	< 0.01
Ethylbenzene	< 0.01	< 0.01
Formaldehyde	0.03	0.01
Toluene	< 0.01	< 0.01
Xylene	< 0.01	< 0.01
Regulated Pollutants other than Criteria and HAP	Potential Emissions	
	PPH	TPY

List the method(s) used to calculate the potential emissions (include dates of any stack tests conducted, versions of software used, source and dates of emission factors, etc.).

- CO, NOx, and VOC emission rates are based on manufacturer's emission data sheet.
- All other emission rates were based off of USEPA's AP-42, Section 3.2, Natural Gas-Fired Reciprocating Engines, 7/00

Applicable Requirements
List all applicable requirements for this emission unit. For each applicable requirement, include the underlying rule/regulation citation and/or <u>construction permit</u> with the condition number. (*Note: Title V permit condition numbers alone are not the underlying applicable requirements*). If an emission limit is calculated based on the type of source and design capacity or if a standard is based on a design parameter, this information should also be included. 45 CSR 13 – Operate and maintain according to manufacturer (G60-C041 5.1.1) 45 CSR 13 – Emission limits (TV 7.1.2, G60-C041 5.1.2) 45 CSR 13 – Maximum fuel consumption (G60-C041 5.1.3) 40 CFR Part 60 Subpart JJJJ – NSPS emission limits (G60-C041 8.2.5) 40 CFR Part 60 Subpart JJJJ – NSPS emergency definition; limitation on maintenance and readiness testing to 100 hrs/yr (G60-C041 8.4.4) 40 CFR Part 63 Subpart ZZZZ – RICE NESHAP as a new, emergency, spark ignition engine at an area source (40 CFR 63 Subpart ZZZZ)
____ Permit Shield
For all applicable requirements listed above, provide monitoring/testing/recordkeeping/reporting which shall be used to demonstrate compliance. If the method is based on a permit or rule, include the condition number or citation. (Note: Each requirement listed above must have an associated method of demonstrating compliance. If there is not already a required method in place, then a method must be proposed.) 45 CSR 13 – Record hours of operation and fuel consumption on a monthly basis; keep records for 5 years (G60-C041 5.4.1) 40 CFR Part 60 Subpart JJJJ – Purchase a certified engine to meet NSPS emission limits (G60-C041 8.4.1) 40 CFR Part 60 Subpart JJJJ – Install non-resettable hour meter (G60-C041 8.3.8) 40 CFR Part 60 Subpart JJJJ – Comply with all applicable monitoring, reports, and recordkeeping requirements (G60-C041 8.6.1) 40 CFR Part 63 Subpart ZZZZ – Compliance with NSPS Subpart JJJJ shows compliance with NESHAP Subpart ZZZZ
Are you in compliance with all applicable requirements for this emission unit? _X__Yes ___No If no, complete the **Schedule of Compliance Form** as **ATTACHMENT F**.

ATTACHMENT E - Emission Unit Form

Emission Unit Description

Emission unit ID number:	**Emission unit name:**	**List any control devices associated with this emission unit:**
EG02	Emergency Generator	NSCR – Non-Selective Catalytic Reducer

Provide a description of the emission unit (type, method of operation, design parameters, etc.):

Natural gas-fired emergency auxiliary generator

Manufacturer:	**Model number:**	**Serial number:**
Cummins	GM8.1L (Engine) GGLA 7965803 (GenSet)	I110250721
Construction date:	**Installation date:**	**Modification date(s):**
2011	2012	N/A

Design Capacity (examples: furnaces - tons/hr, tanks - gallons):
192.5 hp / 1800 rpm

Maximum Hourly Throughput:	**Maximum Annual Throughput:**	**Maximum Operating Schedule:**
1,667 cf/hr	0.834 MMcf/yr	500 hrs/yr

Fuel Usage Data **(fill out all applicable fields)**

Does this emission unit combust fuel? _X__Yes ___ No	**If yes, is it?** ___ Indirect Fired _X__Direct Fired
Maximum design heat input and/or maximum horsepower rating: 192.5 hp / 1800 rpm	**Type and Btu/hr rating of burners:** 1.667 MMBtu/hr

List the primary fuel type(s) and if applicable, the secondary fuel type(s). For each fuel type listed, provide the maximum hourly and annual fuel usage for each.

Natural gas
- Maximum hourly fuel usage = 1,667 cf/hr
- Maximum annual fuel usage = 0.834 MMcf/yr

Describe each fuel expected to be used during the term of the permit.

Fuel Type	Max. Sulfur Content	Max. Ash Content	BTU Value
Natural gas	20 gr sulfur/100 cf	N/A	1,000 Btu/cf

Emissions Data		
Criteria Pollutants	Potential Emissions	
	PPH	TPY
Carbon Monoxide (CO)	0.39	0.10
Nitrogen Oxides (NO_X)	0.03	0.01
Lead (Pb)	N/A	N/A
Particulate Matter ($PM_{2.5}$)	0.02	< 0.01
Particulate Matter (PM_{10})	0.02	< 0.01
Total Particulate Matter (TSP)	0.03	0.01
Sulfur Dioxide (SO_2)	< 0.01	< 0.01
Volatile Organic Compounds (VOC)	0.19	0.05
Hazardous Air Pollutants	Potential Emissions	
	PPH	TPY
Acetaldehyde	< 0.01	< 0.01
Acrolein	< 0.01	< 0.01
Benzene	< 0.01	< 0.01
Ethylbenzene	< 0.01	< 0.01
Formaldehyde	0.03	0.01
Toluene	< 0.01	< 0.01
Xylene	< 0.01	< 0.01
Regulated Pollutants other than Criteria and HAP	Potential Emissions	
	PPH	TPY

List the method(s) used to calculate the potential emissions (include dates of any stack tests conducted, versions of software used, source and dates of emission factors, etc.).

- CO, NOx, and VOC emission rates are based on manufacturer's emission data sheet.
- All other emission rates were based off of USEPA's AP-42, Section 3.2, Natural Gas-Fired Reciprocating Engines, 7/00

Applicable Requirements
List all applicable requirements for this emission unit. For each applicable requirement, include the underlying rule/regulation citation and/or <u>construction permit</u> with the condition number. (*Note: Title V permit condition numbers alone are not the underlying applicable requirements*). If an emission limit is calculated based on the type of source and design capacity or if a standard is based on a design parameter, this information should also be included. 45 CSR 13 – Operate and maintain according to manufacturer (G60-C041 5.1.1) 45 CSR 13 – Emission limits (TV 7.1.2, G60-C041 5.1.2) 45 CSR 13 – Maximum fuel consumption (G60-C041 5.1.3) 40 CFR Part 60 Subpart JJJJ – NSPS emission limits (G60-C041 8.2.5) 40 CFR Part 60 Subpart JJJJ – NSPS emergency definition; limitation on maintenance and readiness testing to 100 hrs/yr (G60-C041 8.4.4) 40 CFR Part 63 Subpart ZZZZ – RICE NESHAP as a new, emergency, spark ignition engine at an area source (40 CFR 63 Subpart ZZZZ)
____ Permit Shield
For all applicable requirements listed above, provide monitoring/testing/recordkeeping/reporting which shall be used to demonstrate compliance. If the method is based on a permit or rule, include the condition number or citation. (Note: Each requirement listed above must have an associated method of demonstrating compliance. If there is not already a required method in place, then a method must be proposed.) 45 CSR 13 – Record hours of operation and fuel consumption on a monthly basis; keep records for 5 years (G60-C041 5.4.1) 40 CFR Part 60 Subpart JJJJ – Purchase a certified engine to meet NSPS emission limits (G60-C041 8.4.1) 40 CFR Part 60 Subpart JJJJ – Install non-resettable hour meter (G60-C041 8.3.8) 40 CFR Part 60 Subpart JJJJ – Comply with all applicable monitoring, reports, and recordkeeping requirements (G60-C041 8.6.1) 40 CFR Part 63 Subpart ZZZZ – Compliance with NSPS Subpart JJJJ shows compliance with NESHAP Subpart ZZZZ
Are you in compliance with all applicable requirements for this emission unit? _X__Yes ___No If no, complete the **Schedule of Compliance Form** as **ATTACHMENT F**.

ATTACHMENT E - Emission Unit Form

Emission Unit Description

Emission unit ID number:	**Emission unit name:**	**List any control devices associated with this emission unit:**
EN01	EN01 Reciprocating Engine/Integral Compressor	N/A

Provide a description of the emission unit (type, method of operation, design parameters, etc.):

Natural gas-fired reciprocating engine/integral compressor

Manufacturer:	**Model number:**	**Serial number:**
Cooper	GMXE-8	46692
Construction date:	**Installation date:**	**Modification date(s):**
	1973	N/A

Design Capacity (examples: furnaces - tons/hr, tanks - gallons):
660 hp

Maximum Hourly Throughput:	**Maximum Annual Throughput:**	**Maximum Operating Schedule:**
0.0054 MMscf/hr	47.3 MMscf/yr	8,760 hrs/yr

Fuel Usage Data **(fill out all applicable fields)**

Does this emission unit combust fuel? _X__Yes ___ No	**If yes, is it?** ___ Indirect Fired _X__Direct Fired
Maximum design heat input and/or maximum horsepower rating: 660 hp	**Type and Btu/hr rating of burners:** 8,200 Btu/hp-hr 0.0054 MMscf/hr

List the primary fuel type(s) and if applicable, the secondary fuel type(s). For each fuel type listed, provide the maximum hourly and annual fuel usage for each.

Pipeline quality natural gas
- Maximum hourly fuel usage = 0.0054 MMscf/hr
- Maximum annual fuel usage = 47.3 MMscf/yr

Describe each fuel expected to be used during the term of the permit.

Fuel Type	Max. Sulfur Content	Max. Ash Content	BTU Value
Pipeline quality natural gas	20 gr sulfur/100 cf	N/A	1,000 Btu/cf

Emissions Data		
Criteria Pollutants	Potential Emissions	
	PPH	TPY
Carbon Monoxide (CO)	0.50	2.2
Nitrogen Oxides (NO_X)	29.5	129.4
Lead (Pb)	N/A	N/A
Particulate Matter ($PM_{2.5}$)	0.21	0.91
Particulate Matter (PM_{10})	0.21	0.91
Total Particulate Matter (TSP)	0.26	1.15
Sulfur Dioxide (SO_2)	< 0.01	0.014
Volatile Organic Compounds (VOC)	3.30	14.5
Hazardous Air Pollutants	Potential Emissions	
	PPH	TPY
Acetaldehyde	0.04	0.18
Acrolein	0.04	0.18
Benzene	0.01	0.05
Ethylbenzene	< 0.01	< 0.01
Formaldehyde	0.08	0.35
Hexane	< 0.01	0.01
Toluene	0.01	0.02
Xylene	< 0.01	< 0.01
Regulated Pollutants other than Criteria and HAP	Potential Emissions	
	PPH	TPY

List the method(s) used to calculate the potential emissions (include dates of any stack tests conducted, versions of software used, source and dates of emission factors, etc.).

- CO, NOx, and VOC Emission Factors based on manufacturer's information.
- PM10, PM2.5, SO2, and HAP emission factors based on AP-42 Section 3.2, Table 3.2-1.

Applicable Requirements
List all applicable requirements for this emission unit. For each applicable requirement, include the underlying rule/regulation citation and/or <u>construction permit</u> with the condition number. (*Note: Title V permit condition numbers alone are not the underlying applicable requirements*). If an emission limit is calculated based on the type of source and design capacity or if a standard is based on a design parameter, this information should also be included. 40 CFR Part 63 Subpart ZZZZ – NESHAP maintenance requirements (TV 6.1.1 and 6.1.4) 40 CFR Part 63 Subpart ZZZZ – NESHAP general requirements/provisions (TV 6.1.3 and 6.1.5) 40 CFR Part 63 Subpart ZZZZ – NESHAP monitoring requirements (TV 6.2.1) 40 CFR Part 63 Subpart ZZZZ – NESHAP recordkeeping requirements (TV 6.4.1, 6.4.2 and 6.4.3) 40 CFR Part 63 Subpart ZZZZ – NESHAP reporting requirements (TV 6.5.1 and 6.5.2)
____ Permit Shield
For all applicable requirements listed above, provide monitoring/testing/recordkeeping/reporting which shall be used to demonstrate compliance. If the method is based on a permit or rule, include the condition number or citation. (Note: Each requirement listed above must have an associated method of demonstrating compliance. If there is not already a required method in place, then a method must be proposed.) 40 CFR Part 63 Subpart ZZZZ – Change oil and filter, inspect spark plugs, and inspect all hoses and belts every 4,320 hours of operation or annually, whichever comes first (TV 6.1.1) 40 CFR Part 63 Subpart ZZZZ – Operate and maintain the RICE according to the manufacturer's instructions OR develop and follow your own maintenance plan (TV 6.1.4) 40 CFR Part 63 Subpart ZZZZ – Comply with all applicable general requirements/provisions (TV 6.1.3 and 6.1.5) 40 CFR Part 63 Subpart ZZZZ – Comply with all applicable monitoring, recordkeeping, and reporting requirements (TV 6.2.1, 6.4.1, 6.4.2, 6.4.3, 6.5.1 and 6.5.2)
Are you in compliance with all applicable requirements for this emission unit? _X__Yes ___No If no, complete the **Schedule of Compliance Form** as **ATTACHMENT F**.

ATTACHMENT E - Emission Unit Form

Emission Unit Description

Emission unit ID number:	**Emission unit name:**	**List any control devices associated with this emission unit:**
EN02	EN02 Reciprocating Engine/Integral Compressor	N/A

Provide a description of the emission unit (type, method of operation, design parameters, etc.):

Natural gas-fired reciprocating engine/integral compressor

Manufacturer:	**Model number:**	**Serial number:**
Cooper	GMXE-8	46693
Construction date:	**Installation date:**	**Modification date(s):**
	1973	N/A

Design Capacity (examples: furnaces - tons/hr, tanks - gallons):
660 hp

Maximum Hourly Throughput:	**Maximum Annual Throughput:**	**Maximum Operating Schedule:**
0.0054 MMscf/hr	47.3 MMscf/yr	8,760 hrs/yr

Fuel Usage Data **(fill out all applicable fields)**

Does this emission unit combust fuel? _X__Yes ___ No	**If yes, is it?** ___ Indirect Fired _X__Direct Fired
Maximum design heat input and/or maximum horsepower rating: 660 hp	**Type and Btu/hr rating of burners:** 8,200 Btu/hp-hr 0.0054 MMscf/hr

List the primary fuel type(s) and if applicable, the secondary fuel type(s). For each fuel type listed, provide the maximum hourly and annual fuel usage for each.

Pipeline quality natural gas
- Maximum hourly fuel usage = 0.0054 MMscf/hr
- Maximum annual fuel usage = 47.3 MMscf/yr

Describe each fuel expected to be used during the term of the permit.

Fuel Type	Max. Sulfur Content	Max. Ash Content	BTU Value
Pipeline quality natural gas	20 gr sulfur/100 cf	N/A	1,000 Btu/cf

Emissions Data		
Criteria Pollutants	Potential Emissions	
	PPH	TPY
Carbon Monoxide (CO)	0.50	2.2
Nitrogen Oxides (NO_X)	29.5	129.4
Lead (Pb)	N/A	N/A
Particulate Matter ($PM_{2.5}$)	0.21	0.91
Particulate Matter (PM_{10})	0.21	0.91
Total Particulate Matter (TSP)	0.26	1.15
Sulfur Dioxide (SO_2)	< 0.01	0.014
Volatile Organic Compounds (VOC)	3.30	14.5
Hazardous Air Pollutants	Potential Emissions	
	PPH	TPY
Acetaldehyde	0.04	0.18
Acrolein	0.04	0.18
Benzene	0.01	0.05
Ethylbenzene	< 0.01	< 0.01
Formaldehyde	0.08	0.35
Hexane	< 0.01	0.01
Toluene	0.01	0.02
Xylene	< 0.01	< 0.01
Regulated Pollutants other than Criteria and HAP	Potential Emissions	
	PPH	TPY

List the method(s) used to calculate the potential emissions (include dates of any stack tests conducted, versions of software used, source and dates of emission factors, etc.).

- CO, NOx, and VOC Emission Factors based on manufacturer's information.
- PM10, PM2.5, SO2, and HAP emission factors based on AP-42 Section 3.2, Table 3.2-1.

Applicable Requirements
List all applicable requirements for this emission unit. For each applicable requirement, include the underlying rule/regulation citation and/or <u>construction permit</u> with the condition number. (*Note: Title V permit condition numbers alone are not the underlying applicable requirements*). If an emission limit is calculated based on the type of source and design capacity or if a standard is based on a design parameter, this information should also be included. 40 CFR Part 63 Subpart ZZZZ – NESHAP maintenance requirements (TV 6.1.1 and 6.1.4) 40 CFR Part 63 Subpart ZZZZ – NESHAP general requirements/provisions (TV 6.1.3 and 6.1.5) 40 CFR Part 63 Subpart ZZZZ – NESHAP monitoring requirements (TV 6.2.1) 40 CFR Part 63 Subpart ZZZZ – NESHAP recordkeeping requirements (TV 6.4.1, 6.4.2 and 6.4.3) 40 CFR Part 63 Subpart ZZZZ – NESHAP reporting requirements (TV 6.5.1 and 6.5.2)
____ Permit Shield
For all applicable requirements listed above, provide monitoring/testing/recordkeeping/reporting which shall be used to demonstrate compliance. If the method is based on a permit or rule, include the condition number or citation. (Note: Each requirement listed above must have an associated method of demonstrating compliance. If there is not already a required method in place, then a method must be proposed.) 40 CFR Part 63 Subpart ZZZZ – Change oil and filter, inspect spark plugs, and inspect all hoses and belts every 4,320 hours of operation or annually, whichever comes first (TV 6.1.1) 40 CFR Part 63 Subpart ZZZZ – Operate and maintain the RICE according to the manufacturer's instructions OR develop and follow your own maintenance plan (TV 6.1.4) 40 CFR Part 63 Subpart ZZZZ – Comply with all applicable general requirements/provisions (TV 6.1.3 and 6.1.5) 40 CFR Part 63 Subpart ZZZZ – Comply with all applicable monitoring, recordkeeping, and reporting requirements (TV 6.2.1, 6.4.1, 6.4.2, 6.4.3, 6.5.1 and 6.5.2)
Are you in compliance with all applicable requirements for this emission unit? _X__Yes ___No If no, complete the **Schedule of Compliance Form** as **ATTACHMENT F**.

ATTACHMENT E - Emission Unit Form

Emission Unit Description

Emission unit ID number:	**Emission unit name:**	**List any control devices associated with this emission unit:**
RBR02	RBR02 Dehydration Unit Reboiler	N/A

Provide a description of the emission unit (type, method of operation, design parameters, etc.):

A natural gas fired boiler used to reheat glycol within the dehydration unit.

Manufacturer:	**Model number:**	**Serial number:**
Cameron	300/550	A15112001583501
Construction date:	**Installation date:**	**Modification date(s):**
2012	2013	N/A

Design Capacity (examples: furnaces - tons/hr, tanks - gallons):
0.77 MMBtu/hr

Maximum Hourly Throughput:	**Maximum Annual Throughput:**	**Maximum Operating Schedule:**
635 cf/hr	5.6 MMcf/yr	8760 hrs/yr

Fuel Usage Data **(fill out all applicable fields)**

Does this emission unit combust fuel? _X__Yes ___ No	**If yes, is it?** __ Indirect Fired _X__Direct Fired
Maximum design heat input and/or maximum horsepower rating: 0.77 MMBtu/hr	**Type and Btu/hr rating of burners:**

List the primary fuel type(s) and if applicable, the secondary fuel type(s). For each fuel type listed, provide the maximum hourly and annual fuel usage for each.

Natural gas
- Maximum hourly fuel usage = 635 cf/hr
- Maximum annual fuel usage = 5.6 MMcf/yr

Describe each fuel expected to be used during the term of the permit.

Fuel Type	Max. Sulfur Content	Max. Ash Content	BTU Value
Natural gas	20 gr sulfur/100 cf	N/A	1,000 Btu/cf

Emissions Data		
Criteria Pollutants	Potential Emissions	
	PPH	TPY
Carbon Monoxide (CO)	0.02	0.09
Nitrogen Oxides (NO_X)	0.03	0.13
Lead (Pb)	N/A	N/A
Particulate Matter ($PM_{2.5}$)	< 0.01	0.01
Particulate Matter (PM_{10})	< 0.01	0.01
Total Particulate Matter (TSP)	0.01	0.03
Sulfur Dioxide (SO_2)	< 0.01	< 0.01
Volatile Organic Compounds (VOC)	0.03	0.15
Hazardous Air Pollutants	Potential Emissions	
	PPH	TPY
Benzene	< 0.01	< 0.01
Ethylbenzene	< 0.01	< 0.01
Formaldehyde	< 0.01	< 0.01
n-Hexane	< 0.01	0.01
Toluene	< 0.01	< 0.01
Regulated Pollutants other than Criteria and HAP	Potential Emissions	
	PPH	TPY

List the method(s) used to calculate the potential emissions (include dates of any stack tests conducted, versions of software used, source and dates of emission factors, etc.).

- NOx, CO, and VOC emission factors from Dominion Spec Sheet 2/20/2012
- PM, PM10, PM2.5, and SO2 emission factors from AP-42, Section 1.4, Natural Gas Combustion, Table 1.4-2, 7/98
- HAP emission factors from AP-42, Section 1.4, Natural Gas Combustion, Tables 1.4-3, 4, 7/98

Applicable Requirements
List all applicable requirements for this emission unit. For each applicable requirement, include the underlying rule/regulation citation and/or <u>construction permit</u> with the condition number. (*Note: Title V permit condition numbers alone are not the underlying applicable requirements*). If an emission limit is calculated based on the type of source and design capacity or if a standard is based on a design parameter, this information should also be included. 45 CSR 13 and 45 CSR 2-3.1 – Visible Emission Limits (TV 4.1.1, R13-2963 5.1.2) 45 CSR 13 – Emission Limits (TV 4.1.2, R13-2963 5.1.1)
____ Permit Shield
For all applicable requirements listed above, provide monitoring/testing/recordkeeping/reporting which shall be used to demonstrate compliance. If the method is based on a permit or rule, include the condition number or citation. (Note: Each requirement listed above must have an associated method of demonstrating compliance. If there is not already a required method in place, then a method must be proposed.) 45 CSR 13 – Compliance with 4.1.1 is demonstrated by combusting natural gas, conducting Method 9 upon request of Secretary, and maintaining records of actual operating hours (TV 4.2.1, TV 4.4.1, TV 4.5.1, R13-2963 5.2.1, R13-2963 5.4.1, R13-2963 5.5.1).
Are you in compliance with all applicable requirements for this emission unit? _X__Yes ___No If no, complete the **Schedule of Compliance Form** as **ATTACHMENT F**.

Attachment G

Air Pollution Control Device Form

ATTACHMENT G - Air Pollution Control Device Form

Control device ID number: F1	**List all emission units associated with this control device.** DEHY02, RBR02	
Manufacturer: QTI	**Model number:** Q100	**Installation date:** 2013

Type of Air Pollution Control Device:

___ Baghouse/Fabric Filter ___ Venturi Scrubber ___ Multiclone

___ Carbon Bed Adsorber ___ Packed Tower Scrubber ___ Single Cyclone

___ Carbon Drum(s) ___ Other Wet Scrubber ___ Cyclone Bank

___ Catalytic Incinerator ___ Condenser ___ Settling Chamber

___ Thermal Incinerator _X_ Flare ___ Other (describe) _____

___ Wet Plate Electrostatic Precipitator ___ Dry Plate Electrostatic Precipitator

List the pollutants for which this device is intended to control and the capture and control efficiencies.

Pollutant	Capture Efficiency	Control Efficiency
VOC		95%
Benzene		95%
Ethylbenzene		95%
n-Hexane		95%
Toluene		95%
Xylene		95%

Explain the characteristic design parameters of this control device (flow rates, pressure drops, number of bags, size, temperatures, etc.).

QTI dehydration unit controlled flare
4.0 MMBtu/hr non-assisted burner

Is this device subject to the CAM requirements of 40 C.F.R. 64? __ Yes _X_ No

If Yes, **Complete ATTACHMENT H**

If No**, Provide justification.** The dehy unit (DEHY02) is not subject to CAM since it is subject to NESHAP Subpart HH, which has provisions for compliance monitoring established after 1990. Per 64.2(b)(1)(i), "*emission limitations or standards proposed by the Administrator after November 15, 1990 pursuant to section 111 or 112 of the Act*" are exempt from CAM. CAM was established to build in provisions for how compliance would be demonstrated for emission limits if not adequately covered by a NSPS or NESHAP rule.

In addition, for VOC purposes, the dehy unit is not subject to CAM per 64.2(b)(1)(vi), which states "*emission limitations or standards for which a part 70 or 71 permit specified a continuous compliance determination method, as defined in 64.1*" is exempt from CAM. Since the R13 permit for the facility (R13-2963) specifies a "continuous compliance determination method" condition (e.g. continuously monitoring the flare using a thermocouple to detect the presence of a flame) and that R13 condition was rolled into the Title V permit, CAM does not apply.

Describe the parameters monitored and/or methods used to indicate performance of this control device.

45 CSR 6-4.1 – Particulate Matter emission limit (TV 5.1.1)
45 CSR 6-4.3 – Incinerator operating requirements (TV 5.1.2, R13-2963 6.1.4)
45 CSR 6-4.5 – Incinerator operating requirements (TV 5.1.3)
45 CSR 6-4.6 – Incinerator odor prevention requirements (TV 5.1.4, R13-2963 6.1.4)
40 CFR 63.10(b)(3) – Facility shall maintain minor source of HAPs (TV 5.1.5, R13-2963 4.1.2)
45 CSR 10-4.1 – Sulfur Dioxide emission limit (TV 5.1.6)
45 CSR 10-5.1 – Hydrogen Sulfide emission limit (TV 5.1.7)
45 CSR 13 – Emission limits (TV 5.1.9, R13-2963 6.1.1)
45 CSR 13 – Operation and design of air pollution control equipment (TV 5.1.11, R13-2963 6.1.3)

Monitoring
45 CSR 30-5.1c – Compliance with 5.1.5 and 5.1.14 shall be demonstrated by using GLYCalc using actual operating parameters (TV 5.2.1, R13-2963 6.2.1)
45 CSR 30-5.1c – Compliance with 5.1.2 and 5.1.11 shall be demonstrated by conducting monthly visible emission observations (TV 5.2.2, R13-2963 6.2.3)
45 CSR 30-5.1.c – Compliance with 5.1.6 shall be demonstrated by annual inlet wet gas sampling (TV 5.2.3)
45 CSR 30-5.1.c – Compliance with 5.1.7 shall be demonstrated by annual inlet wet gas sampling (TV 5.2.4)
45 CSR 13 – Operate and maintain the flare in conformance with its design (TV 5.2.14, R13-2963 6.2.5)

Testing
45 CSR 13 – Initial Method 22 (TV 5.3.3, R13-2963 6.3.3)
45 CSR 13 – Flare compliance assessment shall be conducted if required (TV 5.3.4, R13-2963 6.3.4)

Recordkeeping
45 CSR 13 – Records of annual HAP emissions (TV 5.4.2, R13-2963 4.4.4)
45 CSR 13 – Records of actual operating hours (TV 5.4.3, R13-2963 6.4.1)
45 CSR 13 – Records of visible emission and opacity observations (TV 5.4.5, R13-2963 6.4.3)
45 CSR 13 – Records of the flare design evaluation (TV 5.4.7, R13-2963 6.4.5)

Reporting
45 CSR 13 – Reporting of deviations of visible emissions requirements (TV 5.5.1, R13-2963 6.5.1)
45 CSR 13 – Report deviation from flare design and operation criteria (TV 5.5.4, R13-2963 6.5.3)

Attachment H

Compliance Assurance Monitoring (CAM) Form

ATTACHMENT H - Compliance Assurance Monitoring (CAM) Plan Form

For definitions and information about the CAM rule, please refer to 40 CFR Part 64. Additional information (including guidance documents) may also be found at http://www.epa.gov/ttn/emc/cam.html

CAM APPLICABILITY DETERMINATION

1) Does the facility have a PSEU (Pollutant-Specific Emissions Unit considered separately with respect to **EACH** regulated air pollutant) that is subject to CAM (40 CFR Part 64), which must be addressed in this CAM plan submittal? To determine applicability, a PSEU must meet **all** of the following criteria (*If No, then the remainder of this form need not be completed*): ☐ YES ☒ NO

a. The PSEU is located at a major source that is required to obtain a Title V permit;

b. The PSEU is subject to an emission limitation or standard for the applicable regulated air pollutant that is NOT exempt;

LIST OF EXEMPT EMISSION LIMITATIONS OR STANDARDS:

- NSPS (40 CFR Part 60) or NESHAP (40 CFR Parts 61 and 63) proposed after 11/15/1990.
- Stratospheric Ozone Protection Requirements.
- Acid Rain Program Requirements.
- Emission Limitations or Standards for which a WVDEP Division of Air Quality Title V permit specifies a continuous compliance determination method, as defined in 40 CFR §64.1.
- An emission cap that meets the requirements specified in 40 CFR §70.4(b)(12).

c. The PSEU uses an add-on control device (as defined in 40 CFR §64.1) to achieve compliance with an emission limitation or standard;

d. The PSEU has potential pre-control device emissions of the applicable regulated air pollutant that are equal to or greater than the Title V Major Source Threshold Levels; AND

e. The PSEU is NOT an exempt backup utility power emissions unit that is municipally-owned.

BASIS OF CAM SUBMITTAL

2) Mark the appropriate box below as to why this CAM plan is being submitted as part of an application for a Title V permit:

☒ RENEWAL APPLICATION. **ALL** PSEUs for which a CAM plan has NOT yet been approved need to be addressed in this CAM plan submittal.

☐ INITIAL APPLICATION (submitted after 4/20/98). **ONLY** large PSEUs (i. e., PSEUs with potential post-control device emissions of an applicable regulated air pollutant that are equal to or greater than Major Source Threshold Levels) need to be addressed in this CAM plan submittal.

☐ SIGNIFICANT MODIFICATION TO LARGE PSEUs. **ONLY** large PSEUs being modified after 4/20/98 need to be addressed in this cam plan submittal. For large PSEUs with an approved CAM plan, Only address the appropriate monitoring requirements affected by the significant modification.

3) [a] BACKGROUND DATA AND INFORMATION

Complete the following table for **all** PSEUs that need to be addressed in this CAM plan submittal. This section is to be used to provide background data and information for each PSEU In order to supplement the submittal requirements specified in 40 CFR §64.4. If additional space is needed, attach and label accordingly.

PSEU DESIGNATION	DESCRIPTION	POLLUTANT	CONTROL DEVICE	[b] EMISSION LIMITATION or STANDARD	[c] MONITORING REQUIREMENT
Request to delete the CAM Plan as the unit is subject to	Subpart HH, which has provisions for compliance monitoring established after 1990	(per 64.2(b)(1)(i)). In addition, for VOC	purposes, the facility is not subject to CAM per	64.2(b)(1)(vi) since the Title V permit specifies a "continuous compliance determination method" condition.	
EXAMPLE Boiler No. 1	Wood-Fired Boiler	PM	Multiclone	45CSR§2-4.1.c.; 9.0 lb/hr	Monitor pressure drop across multiclone: Weekly inspection of multiclone

[a] If a control device is common to more than one PSEU, one monitoring plan may be submitted for the control device with the affected PSEUs identified and any conditions that must be maintained or monitored in accordance with 40 CFR §64.3(a). If a single PSEU is controlled by more than one control device similar in design and operation, one monitoring plan for the applicable control devices may be submitted with the applicable control devices identified and any conditions that must be maintained or monitored in accordance with 40 CFR §64.3(a).

[b] Indicate the emission limitation or standard for any applicable requirement that constitutes an emission limitation, emission standard, or standard of performance (as defined in 40 CFR §64.1).

[c] Indicate the monitoring requirements for the PSEU that are required by an applicable regulation or permit condition.