WEST VIRGINIA DEPARTMENT OF ENVIRONMENTAL PROTECTION

DIVISION OF AIR QUALITY

601 57th Street SE

Charleston, WV 25304

Phone: (304) 926-0475

www.wvdep.org/daq

TITLE V PERMIT APPLICATION - GENERAL FORMS

Section 1: General Information

1. **Name of Applicant (As registered with the WV Secretary of State's Office):** M & G Polymers, USA, LLC	**2. Facility Name or Location:** Apple Grove Plant Apple Grove, West Virginia
3. DAQ Plant ID No.: 053-00002	**4. Federal Employer ID No. (FEIN):** 121299890

5. **Permit Application Type:**

☐ Initial Permit — When did operations commence? 1959

☒ Permit Renewal — What is the expiration date of the existing permit? 09/27/2010

☐ Update to Initial Permit Application

6. Type of Business Entity:

☒ Corporation ☐ Governmental Agency

☐ Partnership ☐ Limited Partnership

7. Is the Applicant the:

☐ Owner ☐ Operator ☒ Both

If the Applicant is not both the owner and operator, please provide the name and address of the other party.

_____

_____

_____

8. Number of onsite employees:

160

9. Governmental Code:

☒ Privately owned and operated; 0

☐ Federally owned and operated; 1

☐ State government owned and operated; 2

☐ County government owned and operated; 3

☐ Municipality government owned and operated; 4

☐ District government owned and operated; 5

10. Business Confidentiality Claims

Does this application include confidential information (per 45CSR31)? ☐ Yes ☒ No

If yes, identify each segment of information on each page that is submitted as confidential, and provide justification for each segment claimed confidential, including the criteria under 45CSR§31-4.1, and in accordance with the DAQ's *"PRECAUTIONARY NOTICE-CLAIMS OF CONFIDENTIALITY"* guidance.

11. Mailing Address		
Street or P.O. Box: State Route 2		
City: Apple Grove	**State:** WV	**Zip:** 25502
Telephone Number: (304) 576-2041	**Fax Number:** (304) 576-4520	

12. Facility Location		
Street: State Route 2	**City:** Apple Grove	**County:** Mason
UTM Easting: 397.86 km	**UTM Northing:** 4,279.97 km	**Zone:** ☒ 17 or ☐ 18
Directions: WV Route 2 approximately thirteen miles south of Point Pleasant and thirty miles north of Huntington , WV		
Portable Source? ☐ Yes ☒ No		
Is facility located within a nonattainment area? ☐ Yes ☒ No		**If yes, for what air pollutants?**
Is facility located within 50 miles of another state? ☒ Yes ☐ No		**If yes, name the affected state(s).** Ohio, Kentucky
Is facility located within 100 km of a Class I Area[1]? ☐ Yes ☒ No **If no, do emissions impact a Class I Area[1]?** ☐ Yes ☒ No		**If yes, name the area(s).**

[1] *Class I areas include Dolly Sods and Otter Creek Wilderness Areas in West Virginia, and Shenandoah National Park and James River Face Wilderness Area in Virginia.*

13. Contact Information		
Responsible Official: Jeffrey Shea		**Title:** Plant Manager
Street or P.O. Box: State Route 2		
City: Apple Grove	**State:** WV	**Zip:** 25502
Telephone Number: (304) 576-2041	**Fax Number:** (304) 576-4520	
E-mail address: NA		
Environmental Contact: Debra L. Powell		**Title:** HSES Manager
Street or P.O. Box: State Route 2		
City: Apple Grove	**State:** WV	**Zip:** 25502
Telephone Number: (304) 576-4798	**Fax Number:** (304) 576-4626	
E-mail address: Debra.L.Powell@gruppomgus.com		
Application Preparer:		**Title:**
Company:		
Street or P.O. Box:		
City:	**State:**	**Zip:**
Telephone Number: ( ) -	**Fax Number:** ( ) -	
E-mail address:		

14. Facility Description

List all processes, products, NAICS and SIC codes for normal operation, in order of priority. Also list any process, products, NAICS and SIC codes associated with any alternative operating scenarios if different from those listed for normal operation.

Process	Products	NAICS	SIC
CP-3, CSS-10, & CSS-11	Polyester Resins	325211	2821
CP-4, CSS-12, & CSS-13	Polyester Resins	325211	2821
CSS-7	Polyester Resins	325211	2821
CSS-8	Polyester Resins	325211	2821
CSS-9	Polyester Resins	325211	2821

Provide a general description of operations.

M & G Polymers manufacturers polyester resin and handles the final product in bagging/packaging, storage, and loading facilities. Infrastructure and support facilities are also located at the site and include boilers, wastewater treatment, warehouses, and maintenance shops, laboratories, etc.

15. Provide an **Area Map** showing plant location as **ATTACHMENT A**.

16. Provide a **Plot Plan(s)**, e.g. scaled map(s) and/or sketch(es) showing the location of the property on which the stationary source(s) is located as **ATTACHMENT B**. For instructions, refer to "Plot Plan - Guidelines."

17. Provide a detailed **Process Flow Diagram(s)** showing each process or emissions unit as **ATTACHMENT C**. Process Flow Diagrams should show all emission units, control equipment, emission points, and their relationships.

Section 2: Applicable Requirements

18. Applicable Requirements Summary	
Instructions: Mark all applicable requirements.	
☐ SIP	☐ FIP
☒ Minor source NSR (45CSR13)	☐ PSD (45CSR14)
☐ NESHAP (45CSR15) *	☐ Nonattainment NSR (45CSR19)
☒ Section 111 NSPS	☒ Section 112(d) MACT standards
☐ Section 112(g) Case-by-case MACT	☒ 112(r) RMP
☐ Section 112(i) Early reduction of HAP	☐ Consumer/commercial prod. reqts., section 183(e)
☐ Section 129 Standards/Reqts.	☒ Stratospheric ozone (Title VI)
☐ Tank vessel reqt., section 183(f)	☐ Emissions cap 45CSR§30-2.6.1
☐ NAAQS, increments or visibility (temp. sources)	☒ 45CSR27 State enforceable only rule
☒ 45CSR4 State enforceable only rule	☐ Acid Rain (Title IV, 45CSR33)
☐ Emissions Trading and Banking (45CSR28)	☐ **C**ompliance **A**ssurance **M**onitoring (40CFR64)
☐ NO_x Budget Trading Program Non-EGUs (45CSR1)	☐ NO_x Budget Trading Program EGUs (45CSR26)

* This rule no longer exists. It was superseded by 45 CSR 34 in 2008. The plant is subject to the asbestos rule at 40 CFR 61 Subpart M, which was part of 45 CSR 15 and is now incorporated into 45 CSR 34.

19. Non Applicability Determinations

List all requirements which the source has determined not applicable and for which a permit shield is requested. The listing shall also include the rule citation and the reason why the shield applies.

- 40CFR60, Subpart D - Standards of Performance for Fossil-Fuel-fired Steam Generators constructed after August 17, 1971
  Basis for Applicability Determination: Applies to steam generation units with heat input > 250 mmBtu/hr, and were constructed, reconstructed, or modified after 8/17/71. The Apple Grove Plant does not have any units subject to the regulation.
- 40CFR60, Subpart Db - Standards of Performance for Industrial-Commercial-Institutional Steam Generating Units.
  Basis for Applicability Determination: Applies to steam generating units with heat input > 100 mmBtu/hr which were constructed, reconstructed, or modified after 6/19/84. Boilers have been permanently shutdown.
- 40CFR60, Subpart Dc - Standards of Performance for Small Industrial-Commercial-Institutional Steam Generating Units.
  Basis for Applicability Determination: Applies to steam generating units with heat input of 10-100 mmBtu/hr which were constructed, reconstructed, or modified after 6/9/89. No such steam generating units are used.

☒ Permit Shield

19. Non Applicability Determinations *(Continued)* *- Attach additional pages as necessary.*

List all requirements which the source has determined not applicable and for which a permit shield is requested. The listing shall also include the rule citation and the reason why the shield applies.

- 40CFR60, Subpart E - Standards of Performance for Incinerators.
  Basis for Applicability Determination: Applies only to burning solid waste. The Plant does not have a non-hazardous solid waste incinerator.
- 40CFR60, Subpart K - Standards of Performance for Storage Vessels for Petroleum Liquids constructed/modified after June 11, 1973 and prior May 19, 1978.
  Basis for Applicability Determination: No such petroleum liquid storage vessel has a capacity greater than 40,000 gallons.
- 40CFR60, Subpart Ka - Standards of Performance for Storage Vessels for Petroleum Liquids constructed/modified after May 18, 1978 and prior July 23, 1984.
  Basis for Applicability Determination: No such petroleum liquid storage vessel has a capacity greater than 40,000 gallons.
- 40CFR60, Subpart Kb -Standards of Performance for Volatile Organic Liquid Storage Vessels (including Petroleum Liquid Storage Vessels) constructed/modified after July 23, 1984.
  Basis for Applicability Determination: All the tanks are exempt from the requirements of the Subpart Kb based either on time when they were built, size/pressure, or tank content.
- 40CFR60, Subpart O - Standards of Performance for Sewage Treatment Plants.
  Basis for Applicability Determination: The Plant does not operate a municipal treatment plant.
- 40CFR60, Subpart VV - Equipment Leaks of VOC for the Synthetic Organic Chemical Manufacturing Industry (SOCMI).
  Basis for Applicability Determination: The Plant does not manufacture as an intermediate or final product any of the listed SOCMI chemicals.
- 40CFR60, Subpart DDD - Standards of Performance for VOC Emissions from the Polymer Manufacturing Industry.
  Basis for Applicability Determination: The Plant does not operate SOCMI air oxidation unit processes.
- 40CFR60, Subpart III - Standards of Performance for VOC Emissions from SOCMI Air Oxidation Unit Processes.
  Basis for Applicability Determination: The Plant does not manufacture as an intermediate or final product any of the listed SOCMI chemicals.
- 40CFR60, Subpart NNN - Standards of Performance for VOC Emissions from SOCMI Distillation Operations.
  Basis for Applicability Determination: The Plant does not manufacture as an intermediate or final product any of the listed SOCMI chemicals.
- 40CFR60, Subpart RRR - Standards of Performance for VOC Emissions from SOCMI Reactor Process.
  Basis for Applicability Determination: The Plant does not manufacture as an intermediate or final product any of the listed SOCMI chemicals.
- 40CFR63, Subpart G - National Emissions Standards for Organic HAPs from the SOCMI Process Vents, Storage Vessels, Transfer Operations, and Wastewater.
  Basis for Applicability Determination: Subpart G is not applicable except as referenced by 40CFR63 Subpart JJJ, because the Plant does not manufacture as an intermediate or final product any of the listed chemicals that would trigger applicability.
- 40CFR63, Subpart I – National Emission Standards for Organic Hazardous Air Pollutants for certain processes subject to the negotiated regulation for Equipment Leaks.
  Basis for Applicability Determination: Subpart JJJ §63.1311 takes precedence.

☒ Permit Shield

19. Non Applicability Determinations *(Continued)* - *Attach additional pages as necessary.*

List all requirements which the source has determined not applicable and for which a permit shield is requested. The listing shall also include the rule citation and the reason why the shield applies.

- 40CFR63, Subpart EEEE – National Emission Standards for Organic Hazardous Air Pollutants for Organic Liquids Distribution (Non-Gasoline).
  Basis for Applicability Determination: Tanks containing HAPs are covered by Subpart JJJ.

☒ Permit Shield

20. Facility-Wide Applicable Requirements
List all facility-wide applicable requirements. For each applicable requirement, include the underlying rule/regulation citation and/or <u>construction permit</u> with the condition number. (*Note: Title V permit condition numbers alone are not the underlying applicable requirements*). • Open Burning – 45 CSR6 §3.1 and §3.2 • Asbestos – 40CFR61 and 45CSR34 • Odor – 45CSR4 §3.1 (State enforceable only) • Standby Plan for Reducing Emissions – 45CSR11 §5.2 • Emission Inventory – WV Code §22-5-4(a)(14) • Ozone-Depleting Substances – 40CFR82, Subpart F • Risk Management Plan – 40CFR68 • Permanent Shutdown – 45CSR13 §10.5 • Boilers and Process Heaters – 45CSR34 and 40CFR §63.52
☒ Permit Shield

For all facility-wide applicable requirements listed above, provide monitoring/testing / recordkeeping / reporting which shall be used to demonstrate compliance. If the method is based on a permit or rule, include the condition number and/or citation. (Note: Each requirement listed above must have an associated method of demonstrating compliance. If there is not already a required method in place, then a method must be proposed.)

Monitoring Requirements:

- No facility-wide monitoring requirements are applicable.

Testing Requirements:

- Conduct testing in accordance with the West Virginia Code, underlying regulations, permits, and orders.

Recordkeeping Requirements:

- Keep records of monitoring information as applicable.
- Retain records or all required monitoring data and support information for a period of 5 years.
- Maintain a record of all odor complaints received.

Reporting Requirements:

- Any application form, report, or compliance certification required to be submitted to the DAQ and/or USEPA shall contain a certification by a responsible official.
- Submit a certified emissions statement and pay fee on an annual basis in accordance with the submittal requirements of the DAQ.
- Certify compliance with conditions of the Title V permit on the forms provided by the DAQ.
- Submit semi-annual monitoring reports for any required monitoring on or before September 15 for the reporting period January 1 to June 30 and March 15 for the reporting period July 1 to December 31.
- Reporting emergency situations are in accordance of §2.17 of the Title V permit.
- Submit deviation reports resulting from an emergency or upset condition per 45CSR30 §5.7, that poses an imminent and substantial danger to public health, safety or environment, or deviations from permit requirements in accordance with DAQ rules.
- Meet new applicable requirements on a timely basis or in accordance with schedule required by the requirement.

Are you in compliance with all facility-wide applicable requirements? ☒ Yes ☐ No

If no, complete the **Schedule of Compliance Form** as **ATTACHMENT F**.

21. Active Permits/Consent Orders		
Permit or Consent Order Number	Date of Issuance MM/DD/YYYY	List any Permit Determinations that Affect the Permit *(if any)*
R13-1650K	08/20/2009	None
R30-05300054-2005	09/27/2005	None
	/ /	
	/ /	
	/ /	
	/ /	
	/ /	
	/ /	
	/ /	
	/ /	
	/ /	
	/ /	
	/ /	
	/ /	
	/ /	
	/ /	
	/ /	
	/ /	
	/ /	

22. Inactive Permits/Obsolete Permit Conditions		
Permit Number	Date of Issuance	Permit Condition Number
NA		
	/ /	
	/ /	
	/ /	
	/ /	
	/ /	
	/ /	
	/ /	
	/ /	
	/ /	
	/ /	
	/ /	
	/ /	
	/ /	
	/ /	

Section 3: Facility-Wide Emissions

23. Facility-Wide Emissions Summary [Tons per Year]	
Criteria Pollutants	Potential Emissions*
Carbon Monoxide (CO)	33.85
Nitrogen Oxides (NO_X)	57.28
Lead (Pb)	N/A
Particulate Matter ($PM_{2.5}$)[1]	NA
Particulate Matter (PM_{10})[1]	8.18
Total Particulate Matter (TSP)	8.18
Sulfur Dioxide (SO_2)	21.39
Volatile Organic Compounds (VOC)	29.84
Hazardous Air Pollutants[2]	Potential Emissions*
Ethylene Glycol	16.19
Acetaldehyde	6.30
1,4-Dioxane	0.001
HCl	2.72
Regulated Pollutants other than Criteria and HAP	Potential Emissions*

[1]$PM_{2.5}$ and PM_{10} are components of TSP. Please note that we assume that all TSP is PM_{10} and all PM_{10} is $PM_{2.5}$.
[2]For HAPs that are also considered PM or VOCs, emissions should be included in both the HAPs section and the Criteria Pollutants section.

Section 4: Insignificant Activities

24. Insignificant Activities (Check all that apply)		
☒	1.	Air compressors and pneumatically operated equipment, including hand tools.
☐	2.	Air contaminant detectors or recorders, combustion controllers or shutoffs.
☒	3.	Any consumer product used in the same manner as in normal consumer use, provided the use results in a duration and frequency of exposure which are not greater than those experienced by consumer, and which may include, but not be limited to, personal use items; janitorial cleaning supplies, office supplies and supplies to maintain copying equipment.
☒	4.	Bathroom/toilet vent emissions.
☒	5.	Batteries and battery charging stations, except at battery manufacturing plants.
☒	6.	Bench-scale laboratory equipment used for physical or chemical analysis, but not lab fume hoods or vents. Many lab fume hoods or vents might qualify for treatment as insignificant (depending on the applicable SIP) or be grouped together for purposes of description.
☐	7.	Blacksmith forges.
☒	8.	Boiler water treatment operations, not including cooling towers.
☒	9.	Brazing, soldering or welding equipment used as an auxiliary to the principal equipment at the source.
☐	10.	CO_2 lasers, used only on metals and other materials which do not emit HAP in the process.
☒	11.	Combustion emissions from propulsion of mobile sources, except for vessel emissions from Outer Continental Shelf sources.
☒	12.	Combustion units designed and used exclusively for comfort heating that use liquid petroleum gas or natural gas as fuel.
☒	13.	Comfort air conditioning or ventilation systems not used to remove air contaminants generated by or released from specific units of equipment.
☒	14.	Demineralized water tanks and demineralizer vents.
☒	15.	Drop hammers or hydraulic presses for forging or metalworking.
☒	16.	Electric or steam-heated drying ovens and autoclaves, but not the emissions from the articles or substances being processed in the ovens or autoclaves or the boilers delivering the steam.
☐	17.	Emergency (backup) electrical generators at residential locations.
☒	18.	Emergency road flares.
☐	19.	Emission units which do not have any applicable requirements and which emit criteria pollutants (CO, NO_x, SO_2, VOC and PM) into the atmosphere at a rate of less than 1 pound per hour and less than 10,000 pounds per year aggregate total for each criteria pollutant from all emission units. Please specify all emission units for which this exemption applies along with the quantity of criteria pollutants emitted on an hourly and annual basis: _____ _____ _____ _____ _____ _____ _____ _____ _____

24. Insignificant Activities (Check all that apply)		
☐	20.	Emission units which do not have any applicable requirements and which emit hazardous air pollutants into the atmosphere at a rate of less than 0.1 pounds per hour and less than 1,000 pounds per year aggregate total for all HAPs from all emission sources. This limitation cannot be used for any source which emits dioxin/furans nor for toxic air pollutants as per 45CSR27. Please specify all emission units for which this exemption applies along with the quantity of hazardous air pollutants emitted on an hourly and annual basis: _____ _____ _____ _____
☐	21.	Environmental chambers not using hazardous air pollutant (HAP) gases.
☒	22.	Equipment on the premises of industrial and manufacturing operations used solely for the purpose of preparing food for human consumption.
☐	23.	Equipment used exclusively to slaughter animals, but not including other equipment at slaughterhouses, such as rendering cookers, boilers, heating plants, incinerators, and electrical power generating equipment.
☒	24.	Equipment used for quality control/assurance or inspection purposes, including sampling equipment used to withdraw materials for analysis.
☒	25.	Equipment used for surface coating, painting, dipping or spray operations, except those that will emit VOC or HAP.
☒	26.	Fire suppression systems.
☒	27.	Firefighting equipment and the equipment used to train firefighters.
☐	28.	Flares used solely to indicate danger to the public.
☒	29.	Fugitive emission related to movement of passenger vehicle provided the emissions are not counted for applicability purposes and any required fugitive dust control plan or its equivalent is submitted.
☒	30.	Hand-held applicator equipment for hot melt adhesives with no VOC in the adhesive formulation.
☒	31.	Hand-held equipment for buffing, polishing, cutting, drilling, sawing, grinding, turning or machining wood, metal or plastic.
☐	32.	Humidity chambers.
☒	33.	Hydraulic and hydrostatic testing equipment.
☒	34.	Indoor or outdoor kerosene heaters.
☒	35.	Internal combustion engines used for landscaping purposes.
☐	36.	Laser trimmers using dust collection to prevent fugitive emissions.
☒	37.	Laundry activities, except for dry-cleaning and steam boilers.
☒	38.	Natural gas pressure regulator vents, excluding venting at oil and gas production facilities.
☐	39.	Oxygen scavenging (de-aeration) of water.
☐	40.	Ozone generators.
☒	41.	Plant maintenance and upkeep activities (e.g., grounds-keeping, general repairs, cleaning, painting, welding, plumbing, re-tarring roofs, installing insulation, and paving parking lots) provided these activities are not conducted as part of a manufacturing process, are not related to the source's primary business activity, and not otherwise triggering a permit modification. (Cleaning and painting activities qualify if they are not subject to VOC or HAP control requirements. Asphalt batch plant owners/operators must still get a permit if otherwise requested.)
☒	42.	Portable electrical generators that can be moved by hand from one location to another. "Moved by Hand" means that it can be moved without the assistance of any motorized or non-motorized vehicle, conveyance, or device.
☒	43.	Process water filtration systems and demineralizers.

24. Insignificant Activities (Check all that apply)		
☒	44.	Repair or maintenance shop activities not related to the source's primary business activity, not including emissions from surface coating or de-greasing (solvent metal cleaning) activities, and not otherwise triggering a permit modification.
☒	45.	Repairs or maintenance where no structural repairs are made and where no new air pollutant emitting facilities are installed or modified.
☒	46.	Routing [sic-should be "routine"] calibration and maintenance of laboratory equipment or other analytical instruments.
☒	47.	Salt baths using nonvolatile salts that do not result in emissions of any regulated air pollutants. Shock chambers.
☐	48.	Shock chambers.
☒	49.	Solar simulators.
☒	50.	Space heaters operating by direct heat transfer.
☒	51.	Steam cleaning operations.
☒	52.	Steam leaks.
☐	53.	Steam sterilizers.
☒	54.	Steam vents and safety relief valves.
☒	55.	Storage tanks, reservoirs, and pumping and handling equipment of any size containing soaps, vegetable oil, grease, animal fat, and nonvolatile aqueous salt solutions, provided appropriate lids and covers are utilized.
☒	56.	Storage tanks, vessels, and containers holding or storing liquid substances that will not emit any VOC or HAP. Exemptions for storage tanks containing petroleum liquids or other volatile organic liquids should be based on size limits such as storage tank capacity and vapor pressure of liquids stored and are not appropriate for this list.
☐	57.	Such other sources or activities as the Director may determine.
☒	58.	Tobacco smoking rooms and areas.
☒	59.	Vents from continuous emissions monitors and other analyzers.

Section 5: Emission Units, Control Devices, and Emission Points

25. Equipment Table
Fill out the **Title V Equipment Table** and provide it as **ATTACHMENT D**.
26. Emission Units
For each emission unit listed in the **Title V Equipment Table**, fill out and provide an **Emission Unit Form** as **ATTACHMENT E**.
For each emission unit not in compliance with an applicable requirement, fill out a **Schedule of Compliance Form** as **ATTACHMENT F**. An attachment F is provided for completeness but is not needed because each emission unit is in compliance with its applicable requirements.
27. Control Devices
For each control device listed in the **Title V Equipment Table**, fill out and provide an **Air Pollution Control Device Form** as **ATTACHMENT G**.
For any control device that is required on an emission unit in order to meet a standard or limitation for which the potential pre-control device emissions of an applicable regulated air pollutant is greater than or equal to the Title V Major Source Threshold Level, refer to the **Compliance Assurance Monitoring (CAM) Form(s)** for CAM applicability. Fill out and provide these forms, if applicable, for each Pollutant Specific Emission Unit (PSEU) as **ATTACHMENT H**. CAM is not applicable to any PSEU addressed by this renewal application.

Section 6: Certification of Information

28. Certification of Truth, Accuracy and Completeness and Certification of Compliance

*Note: This Certification must be signed by a responsible official. The **original**, signed in **blue ink**, must be submitted with the application. Applications without an **original** signed certification will be considered as incomplete.*

a. Certification of Truth, Accuracy and Completeness

I certify that I am a responsible official (as defined at 45CSR§30-2.38) and am accordingly authorized to make this submission on behalf of the owners or operators of the source described in this document and its attachments. I certify under penalty of law that I have personally examined and am familiar with the statements and information submitted in this document and all its attachments. Based on my inquiry of those individuals with primary responsibility for obtaining the information, I certify that the statements and information are to the best of my knowledge and belief true, accurate, and complete. I am aware that there are significant penalties for submitting false statements and information or omitting required statements and information, including the possibility of fine and/or imprisonment.

b. Compliance Certification

Except for requirements identified in the Title V Application for which compliance is not achieved, I, the undersigned hereby certify that, based on information and belief formed after reasonable inquiry, all air contaminant sources identified in this application are in compliance with all applicable requirements.

Responsible official (type or print)

Name: Jeffrey Shea	Title: Plant Manager

Responsible official's signature:

Signature: _____ Signature Date: _____

(Must be signed and dated in blue ink)

Note: Please check all applicable attachments included with this permit application:	
☒	ATTACHMENT A: Area Map
☒	ATTACHMENT B: Plot Plan(s)
☒	ATTACHMENT C: Process Flow Diagram(s)
☒	ATTACHMENT D: Equipment Table
☒	ATTACHMENT E: Emission Unit Form(s)
☒	ATTACHMENT F: Schedule of Compliance Form(s) Form not needed; each emission unit is in compliance.
☒	ATTACHMENT G: Air Pollution Control Device Form(s)
☒	ATTACHMENT H: Compliance Assurance Monitoring (CAM) Form(s)

All of the required forms and additional information can be found and downloaded from, the DEP website at www.wvdep.org/daq, requested by phone (304) 926-0475, and/or obtained through the mail.

TITLE V PERMIT APPLICATION CHECKLIST
FOR ADMINISTRATIVE COMPLETENESS

A complete application is demonstrated when all of the information required below is properly prepared, completed and attached. The items listed below are required information which must be submitted with a Title V permit application. Any submittal will be considered incomplete if the required information is not included.*	
☒	Two signed copies of the application (at least one must contain the original "*Certification*" page signed and dated in blue ink)
☒	Correct number of copies of the application on separate CDs or diskettes, (i.e. at least one disc per copy)
☒	*Table of Contents (needs to be included but not for administrative completeness)
☒	Facility information
☒	Description of process and products, including NAICS and SIC codes, and including alternative operating scenarios
☒	Area map showing plant location
☒	Plot plan showing buildings and process areas
☒	Process flow diagram(s), showing all emission units, control equipment, emission points, and their relationships
☒	Identification of all applicable requirements with a description of the compliance status, the methods used for demonstrating compliance, and a Schedule of Compliance Form (ATTACHMENT F) for all requirements for which the source is not in compliance
☒	Listing of all active permits and consent orders (if applicable)
☒	Facility-wide emissions summary
☒	Identification of Insignificant Activities
☒	ATTACHMENT D - Title V Equipment Table completed for all emission units at the facility except those designated as insignificant activities
☒	ATTACHMENT E - Emission Unit Form completed for each emission unit listed in the Title V Equipment Table (ATTACHMENT D) and a Schedule of Compliance Form (ATTACHMENT F) for all requirements for which the emission unit is not in compliance
☒	ATTACHMENT G - Air Pollution Control Device Form completed for each control device listed in the Title V Equipment Table (ATTACHMENT D)
☒	ATTACHMENT H – Compliance Assurance Monitoring (CAM) Plan Form completed for each control device for which the "Is the device subject to CAM?" question is answered "Yes" on the Air Pollution Control Device Form (ATTACHMENT G)
☒	General Application Forms signed by a Responsible Official
☒	Confidential Information submitted in accordance with 45CSR31

Table of Contents

ATTACHMENT A	AREA MAP
ATTACHMENT B	PLOT PLAN
ATTACHMENT C	PROCESS FLOW DIAGRAMS
ATTACHMENT D	TITLE V EQUIPMENT TABLE
ATTACHMENT E	EMISSION UNIT FORMS
ATTACHMENT F	SCHEDULE OF COMPLIANCE FORMS
ATTACHMENT G	AIR POLLUTION CONTROL DEVICE FORMS
ATTACHMENT H	COMPLIANCE ASSURANCE MONITORING FORM

Attachment A

Area Map

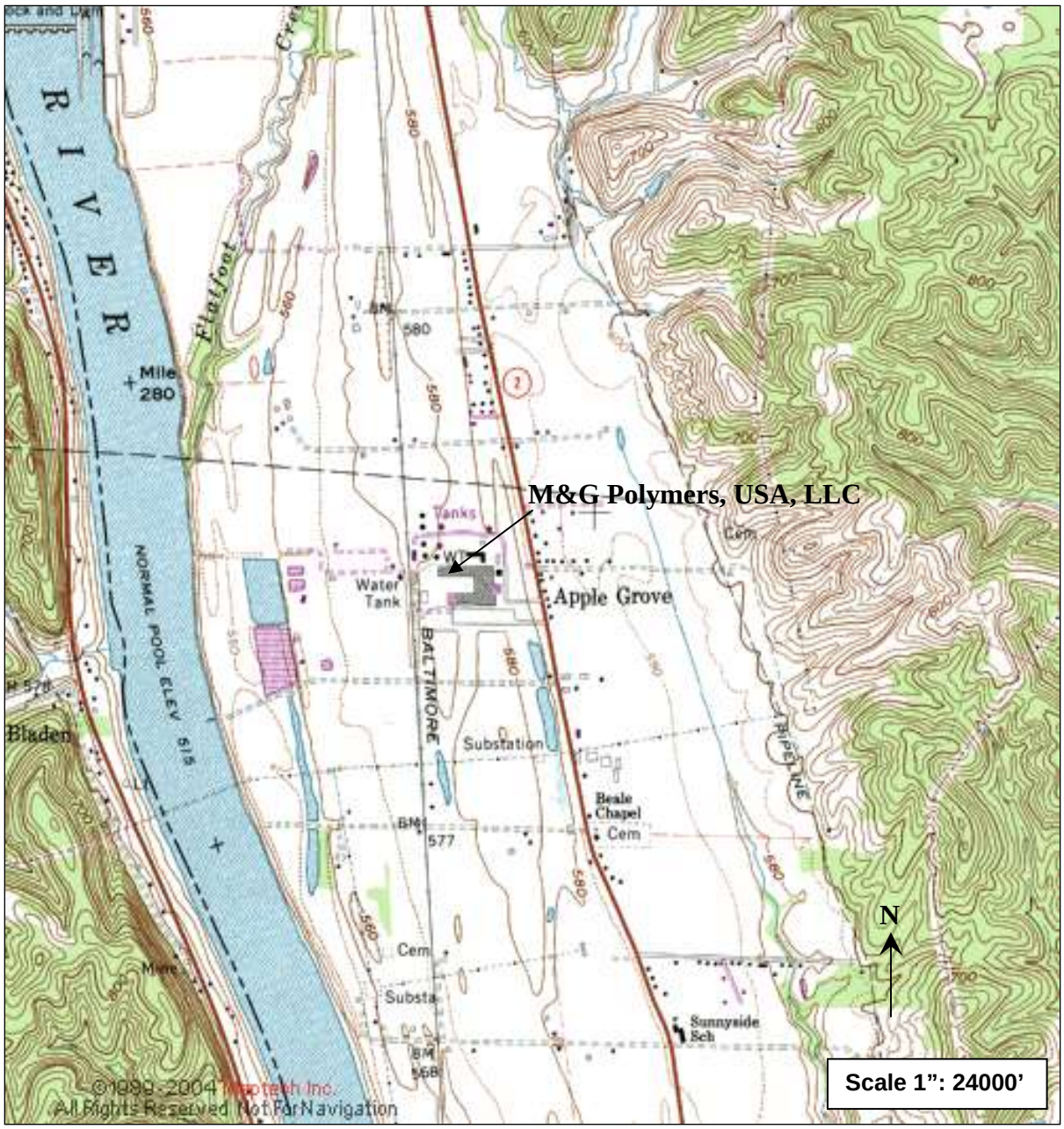

Attachment B

Site Location Map

Attachment B

Plot Plan

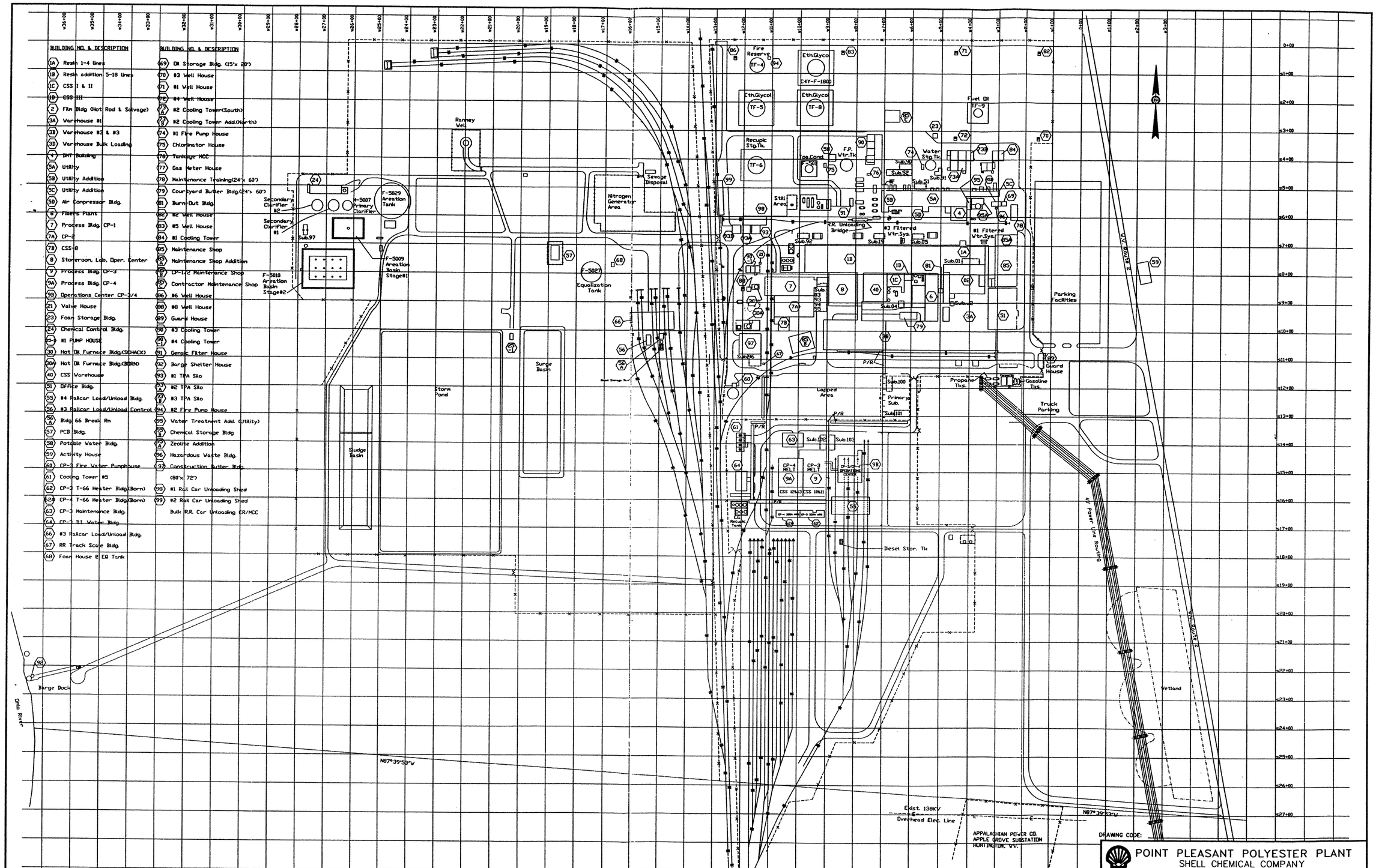

BUILDING NO. & DESCRIPTION	BUILDING NO. & DESCRIPTION
1A Resin 1-4 lines	69 Oil Storage Bldg. (15'x 20')
1B Resin addition 5-18 lines	70 #3 Well House
1C CSS I & II	71 #1 Well House
1D CSS III	72 #4 Well House
2 Film Bldg (Hot Rod & Salvage)	73 A #2 Cooling Tower(South)
3A Warehouse #1	73 B #2 Cooling Tower Add.(North)
3B Warehouse #2 & #3	74 #1 Fire Pump House
3D Warehouse Bulk Loading	75 Chlorinator House
4 IMT Building	76 Tankage HCC
5A Utility	77 Gas Meter House
5B Utility Addition	78 Maintenance Training(24'x 60')
5C Utility Addition	79 Courtyard Butler Bldg.(24'x 60')
5D Air Compressor Bldg.	81 Burn-Out Bldg.
6 Fibers Plant	82 #2 Well House
7 Process Bldg. CP-1	83 #5 Well House
7A CP-2	84 #1 Cooling Tower
7B CSS-8	85 Maintenance Shop
8 Storeroom, Lab, Oper. Center	86 A Maintenance Shop Addition
9 Process Bldg. CP-3	86 B CP-1/2 Maintenance Shop
9A Process Bldg. CP-4	87 Contractor Maintenance Shop
9B Operations Center CP-3/4	88 #6 Well House
21 Valve House	89 #8 Well House
23 Foam Storage Bldg.	89 Guard House
24 Chemical Control Bldg.	90 #3 Cooling Tower
29 #1 PUMP HOUSE	91 #4 Cooling Tower
39 Hot Oil Furnace Bldg.(SCHACK)	91 Gensic Filter House
39A Hot Oil Furnace Bldg.(BORN)	92 Barge Shelter House
40 CSS Warehouse	93 #1 TPA Silo
51 Office Bldg.	93 A #2 TPA Silo
55 #4 Railcar Load/Unload Bldg.	93 B #3 TPA Silo
56 #3 Railcar Load/Unload Control	94 #2 Fire Pump House
56 A Bldg. 66 Break Rm	95 Water Treatment Add. (Utility)
57 PCB Bldg.	95 A Chemical Storage Bldg
58 Potable Water Bldg.	95 B Zeolite Addition
59 Activity House	96 Hazardous Waste Bldg.
60 CP-3 Fire Water Pumphouse	97 Construction Butler Bldg.
61 Cooling Tower #5	(80'x 72')
62 CP-3 T-66 Heater Bldg.(Born)	98 #1 Rail Car Unloading Shed
62A CP-4 T-66 Heater Bldg.(Born)	99 #2 Rail Car Unloading Shed
63 CP-3 Maintenance Bldg.	Bulk R.R. Car Unloading CR/MCC
64 CP-3 D1 Water Bldg.	
66 #3 RailCar Load/Unload Bldg.	
67 RR Track Scale Bldg.	
68 Foam House & EQ Tank	

REVISIONS

NO.	DATE	JOB	DESCRIPTION	MADE	CHK'D	APP'D	APP'D	APP'D
1	8/7/95		GENERAL UPDATE	RAB				

ACCOUNT NUMBER:

FILM DATES:

NOTICE: THIS DOCUMENT IS THE PROPERTY OF SHELL CHEMICAL CO. NEITHER THIS DOCUMENT NOR ANY DATA OR INFORMATION HEREIN SHALL BE COPIED OR REPRODUCED IN ANY MANNER, LOANED OR OTHERWISE DISPOSED OF OR USED FOR ANY PURPOSE WHATSOEVER, WITHOUT THE PRIOR WRITTEN PERMISSION OF SHELL CHEMICAL CO. IF THIS DOCUMENT IS LOANED BY OR WITH THE AUTHORITY OF SHELL CHEMICAL CO. THE BORROWER, IN CONSIDERATION OF SUCH LOAN, AGREES TO THE FOREGOING CONDITIONS AND TO RETURN THIS DOCUMENT UPON REQUEST OR UPON COMPLETION OF THE SPECIFICALLY AUTHORIZED WORK FOR WHICH IT WAS ISSUED.

POINT PLEASANT POLYESTER PLANT
SHELL CHEMICAL COMPANY

OVERALL SITE PLAN

		DATE		DATE	SCALE:	ISSUE DATE:	REV.
DRAWN:	C.Kelley	1/95	APPROVED:		1" = 140'	2-3-95	1
CHECKED:			APPROVED:		DWG. No.	PP-100-84	
APPROVED:			APPROVED:				

SHEET 1 OF 5

Attachment C

Process Flow Diagrams

M&G Poylmers – Apple Grove
CP-3 Process Flow Diagram

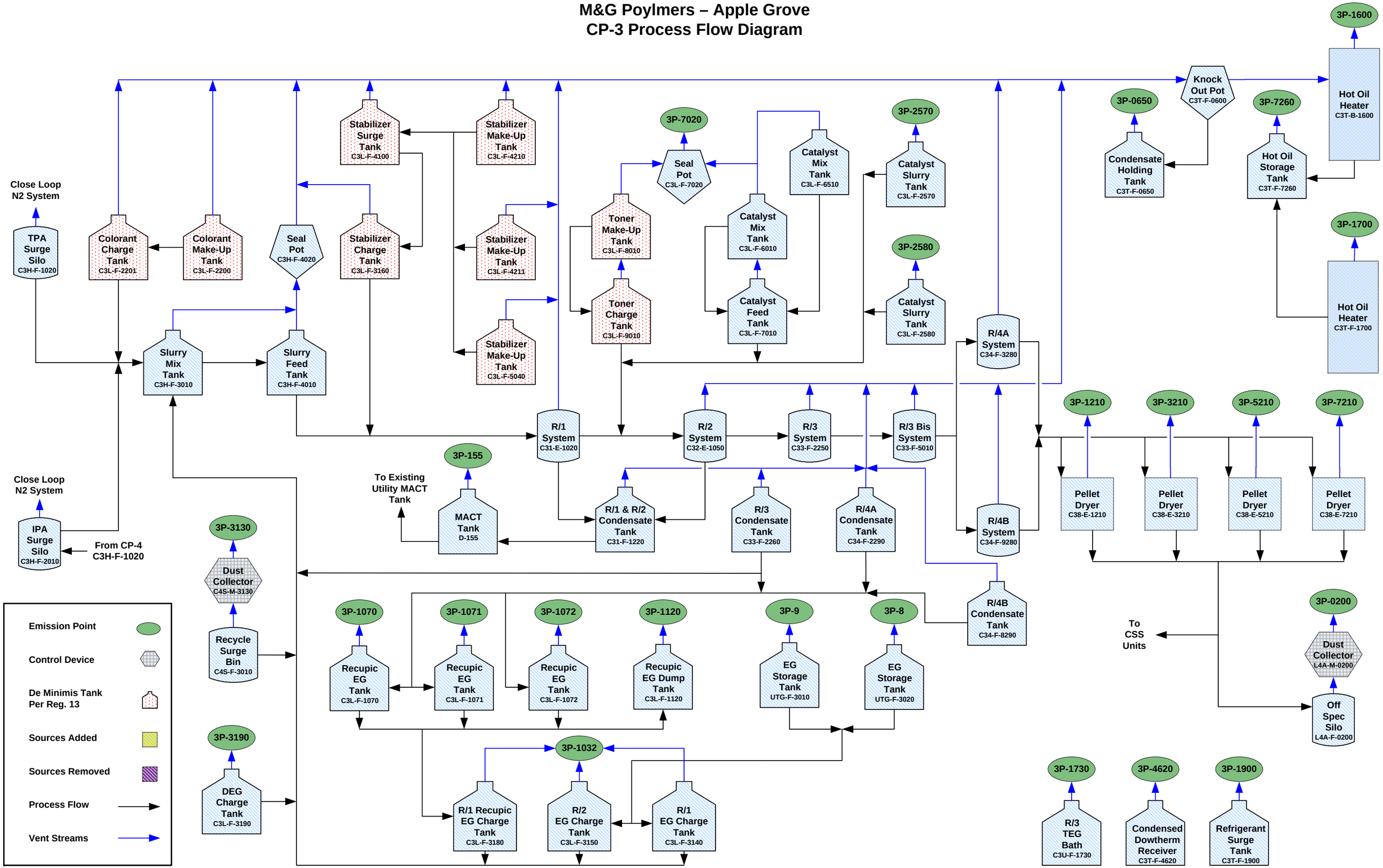

M&G Poylmers – Apple Grove
CP-4 Process Flow Diagram

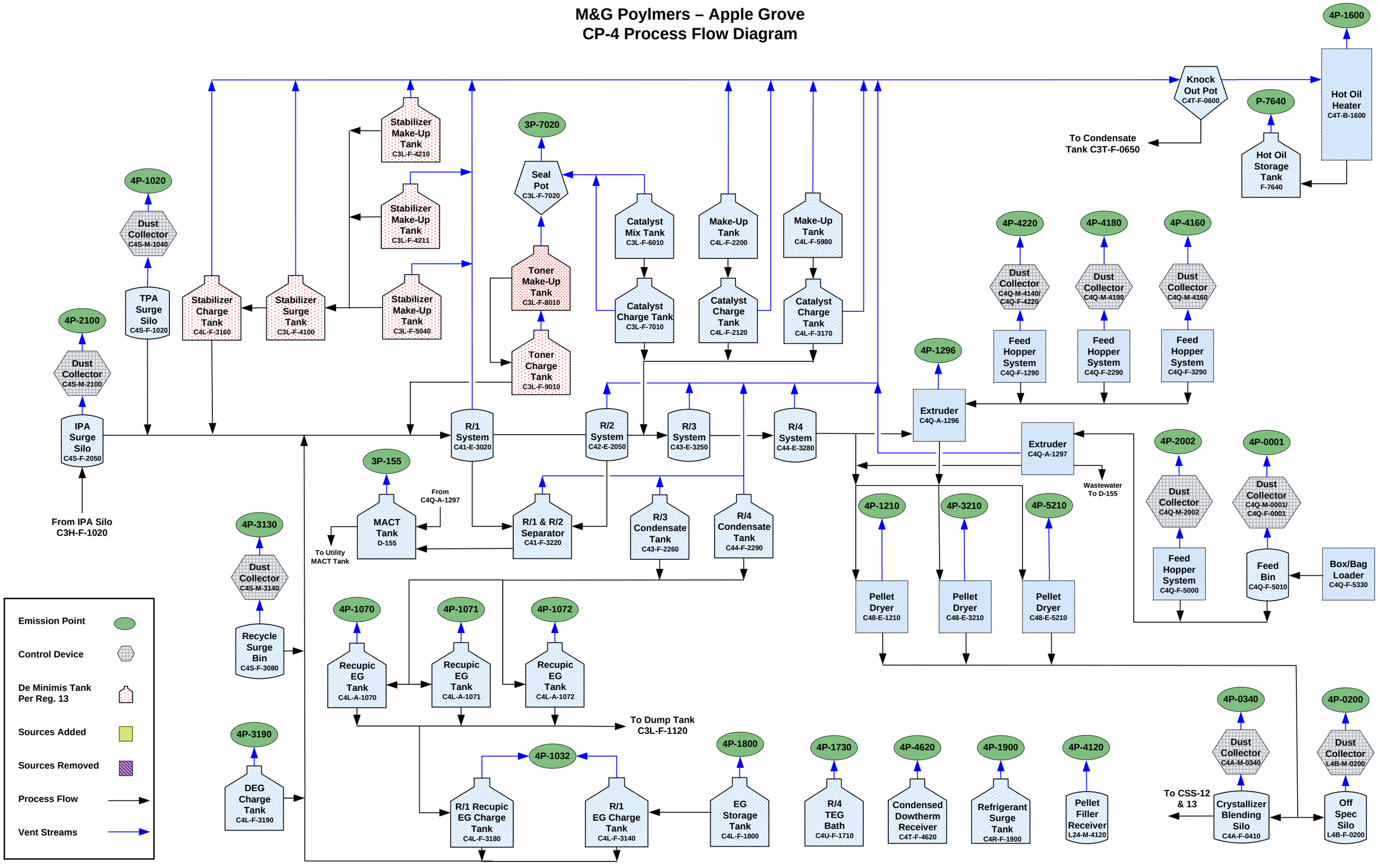

M&G Poylmers – Apple Grove
CSS-10 Process Flow Diagram

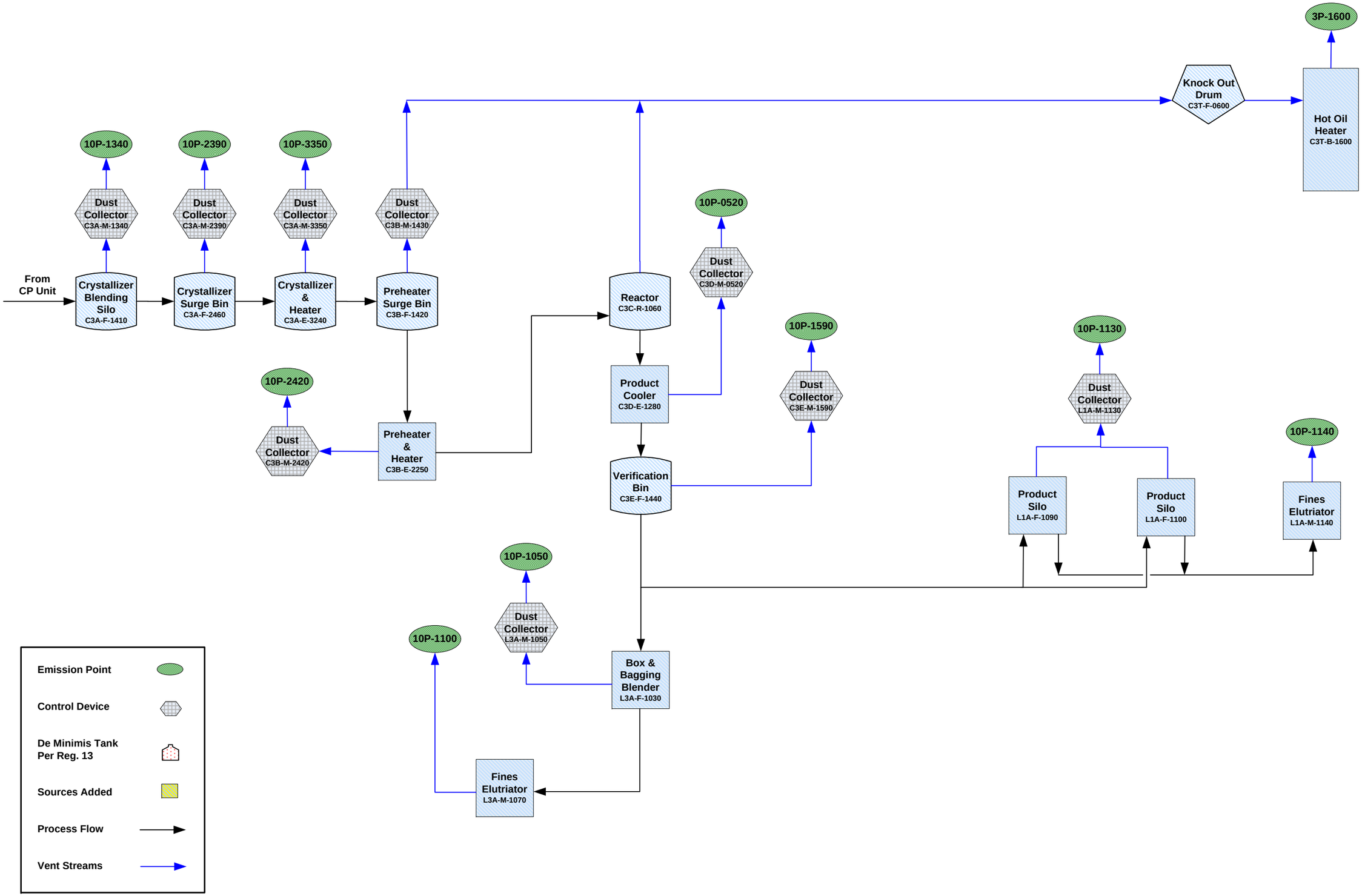

M&G Poylmers – Apple Grove
CSS-11 Process Flow Diagram

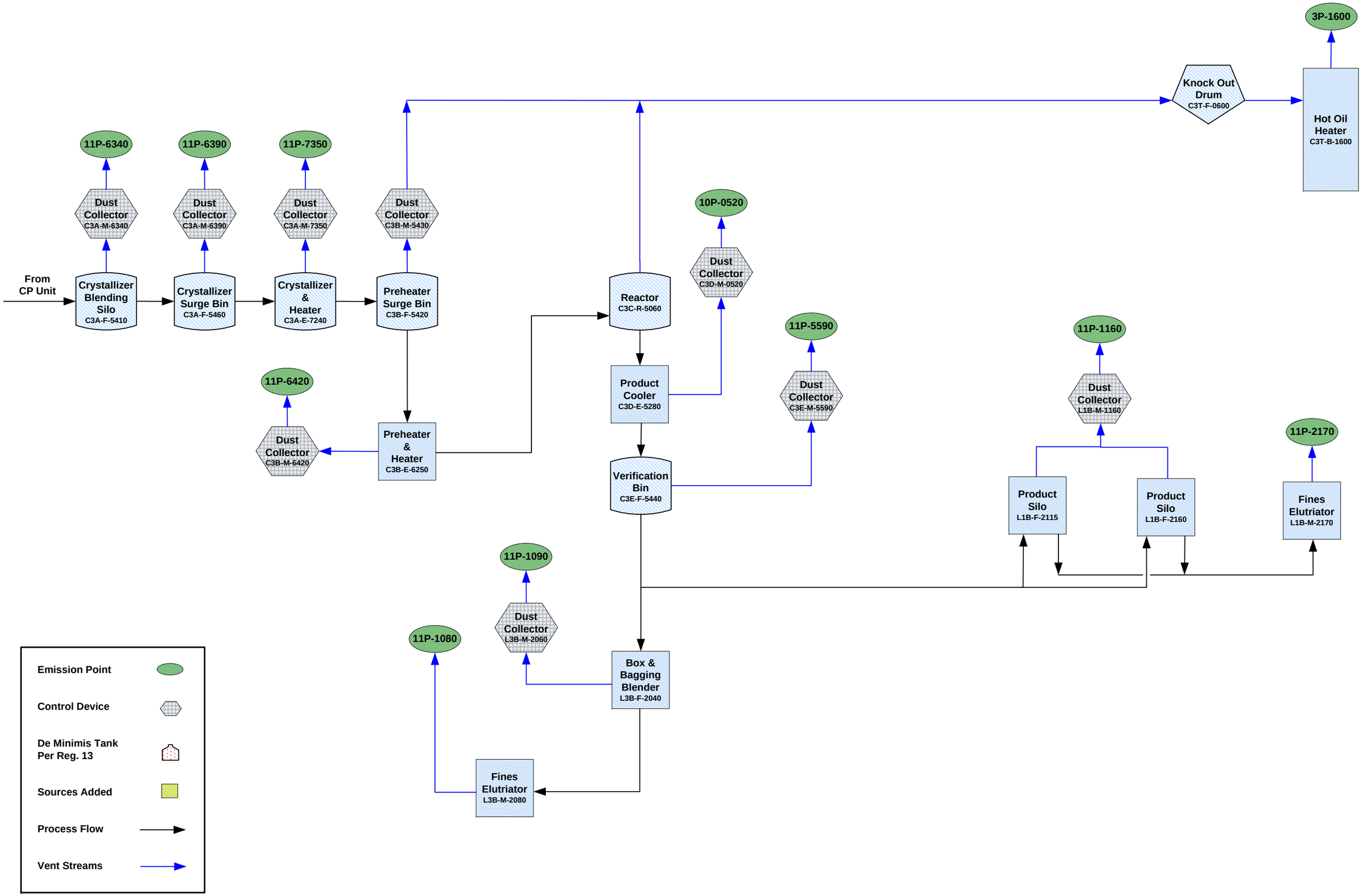

M&G Poylmers – Apple Grove
CSS-12 Process Flow Diagram

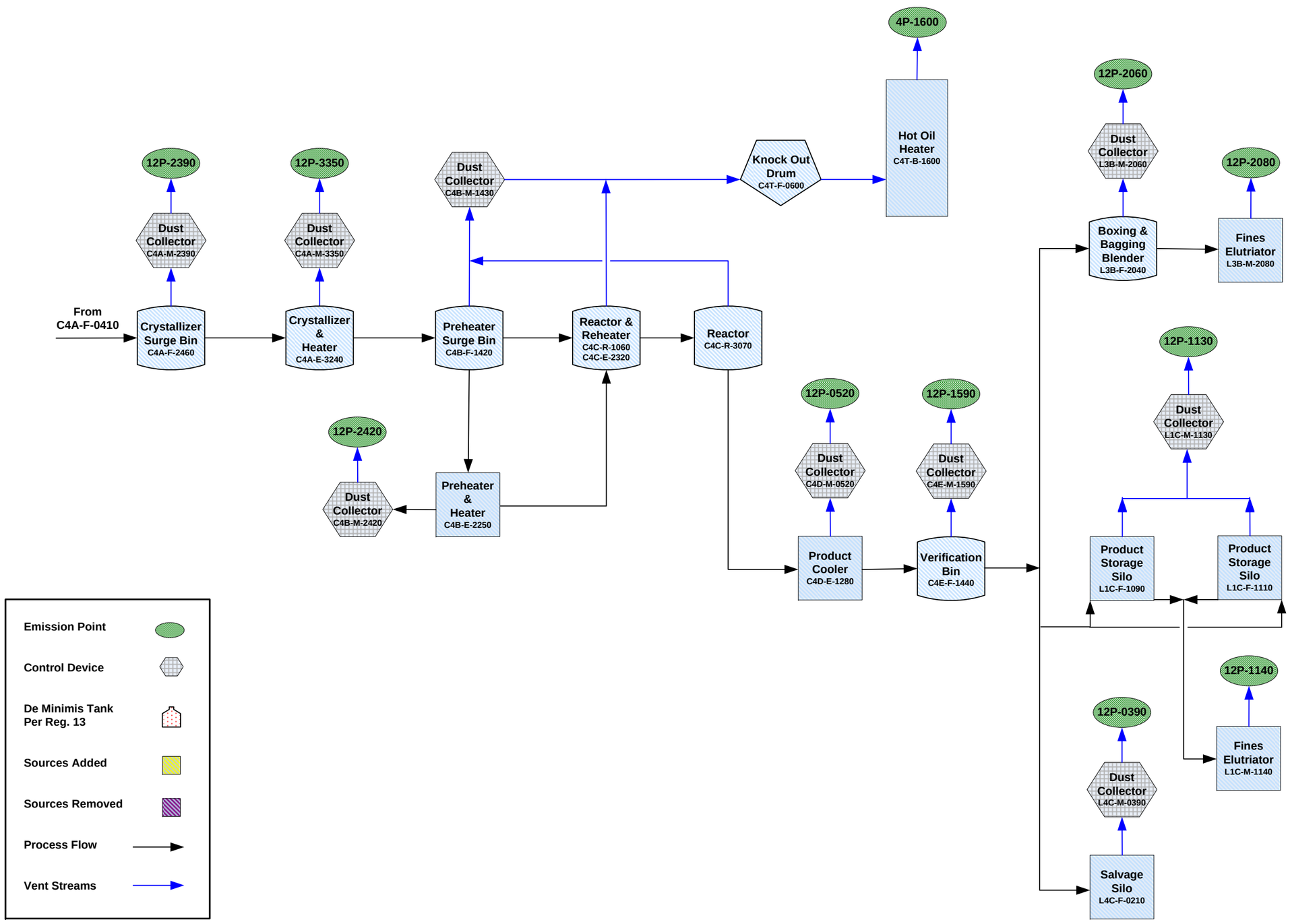

M&G Poylmers – Apple Grove
CSS-13 Process Flow Diagram

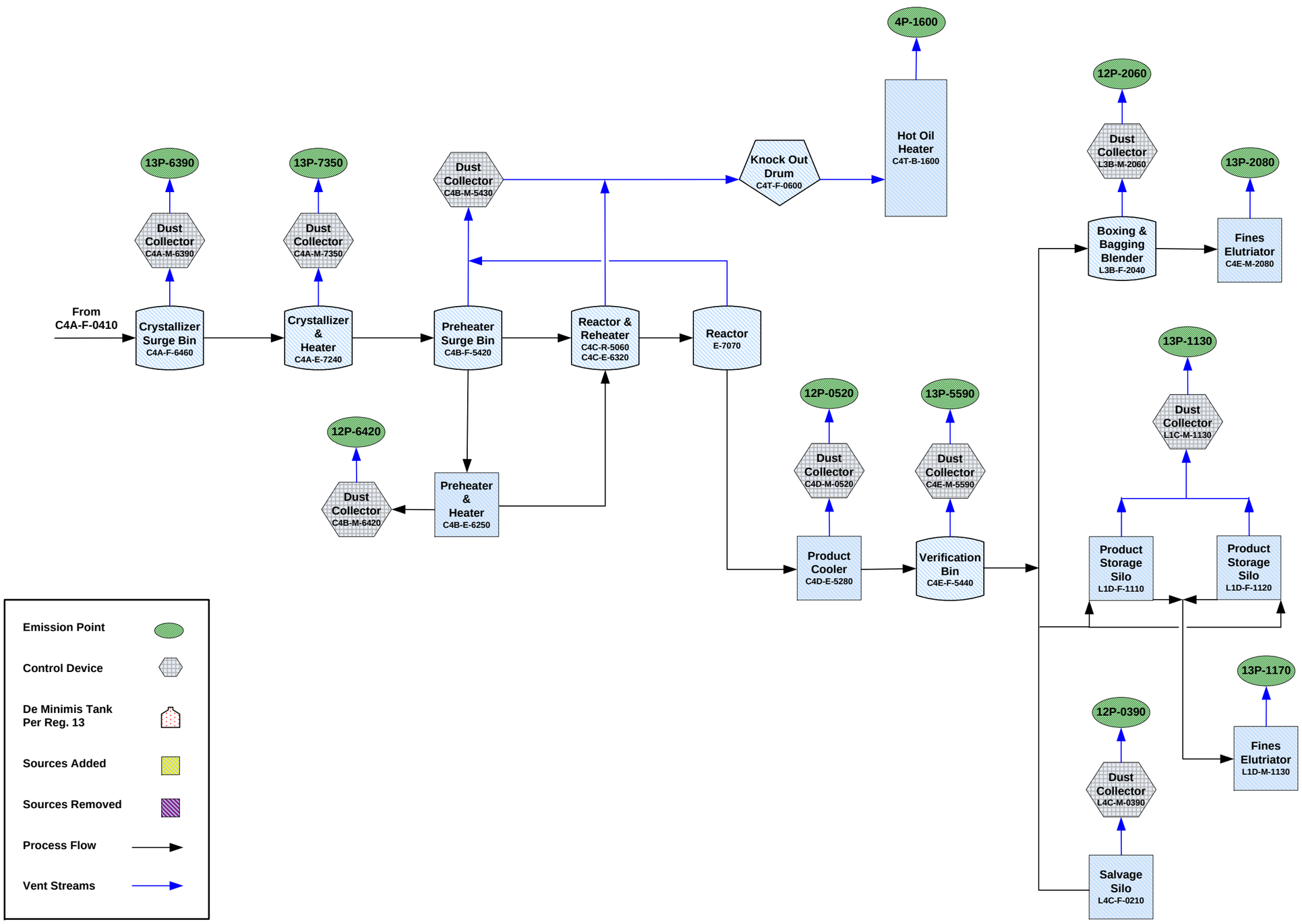

M&G Poylmers – Apple Grove
CSS-7 Process Flow Diagram

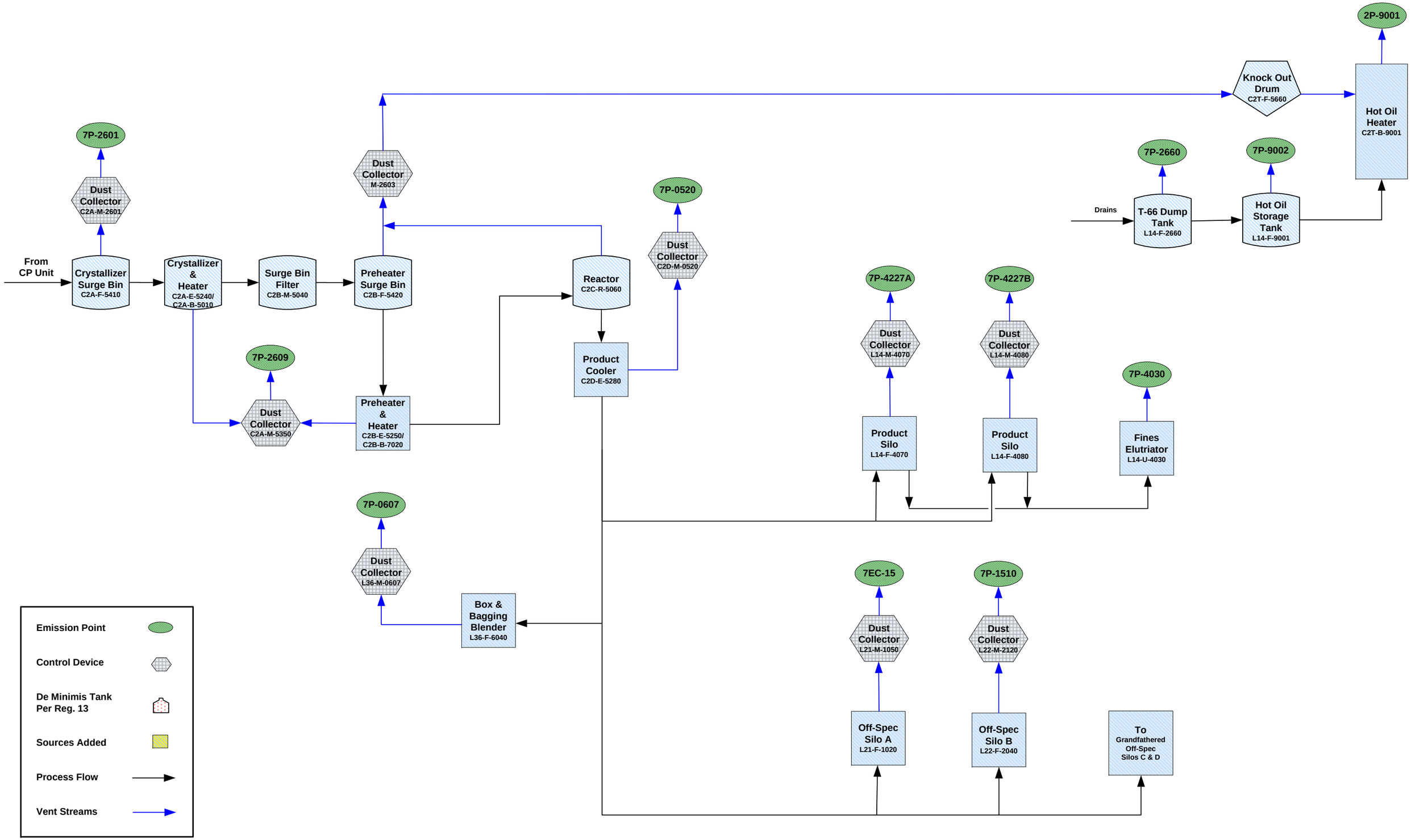

M&G Poylmers – Apple Grove
CSS-8 Process Flow Diagram

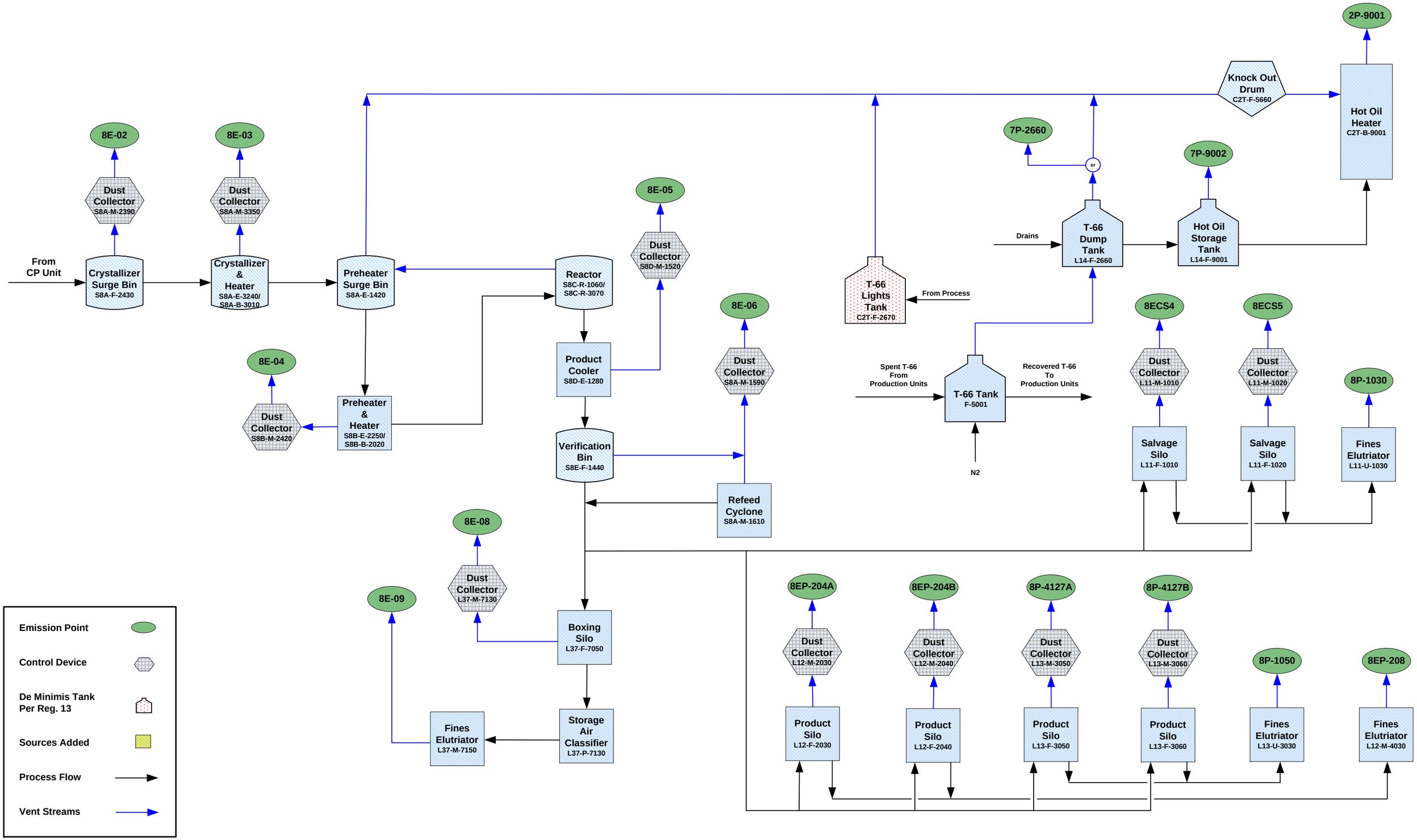

M&G Poylmers – Apple Grove
CSS-9 Process Flow Diagram

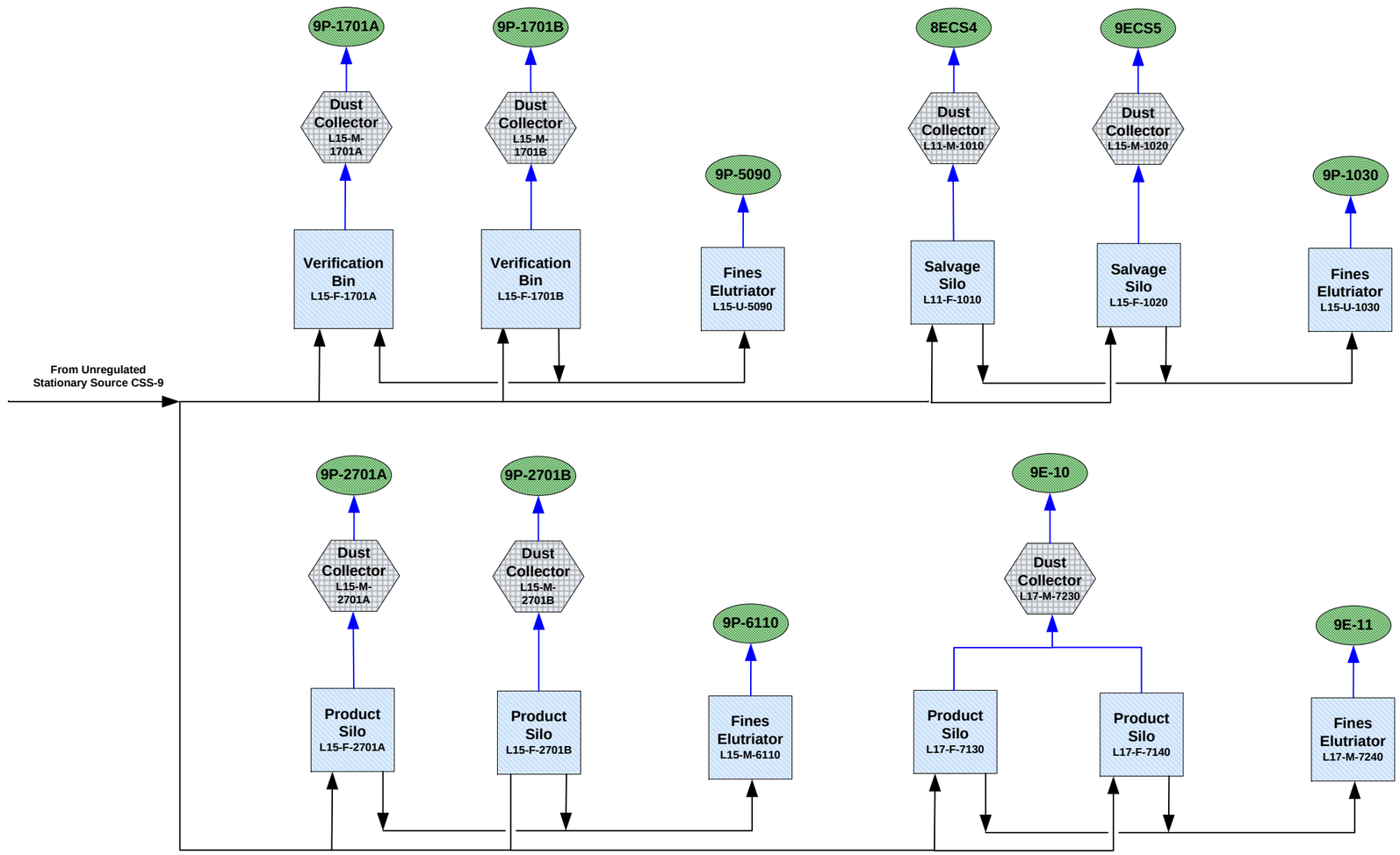

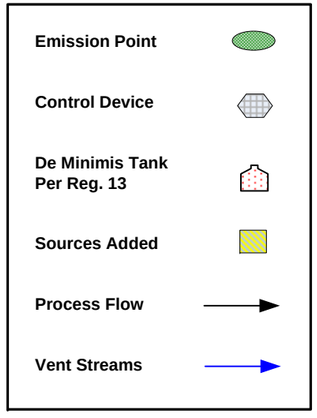

M&G Poylmers – Apple Grove
Utility Process Flow Diagram

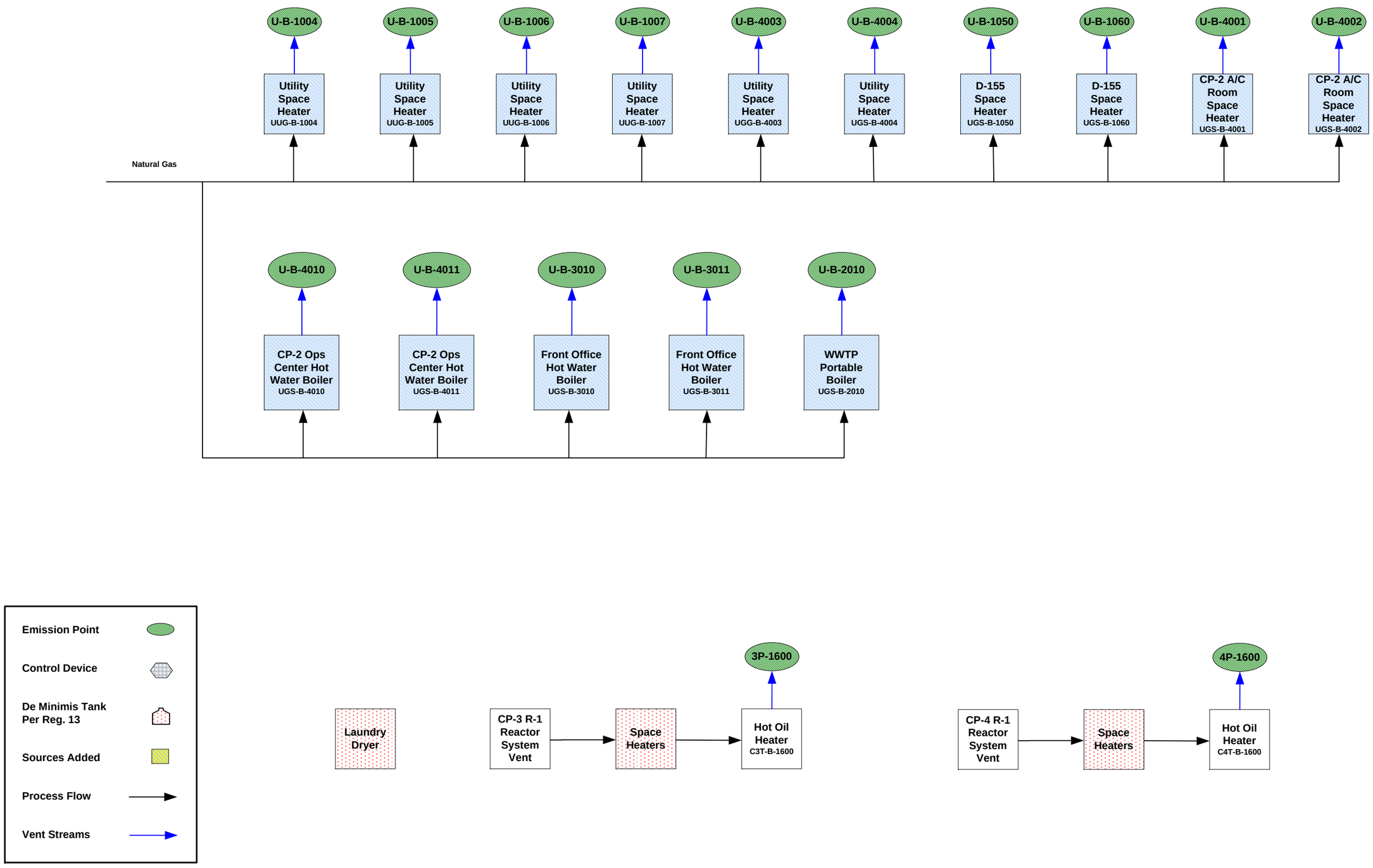

Attachment F – Process Flow Diagram

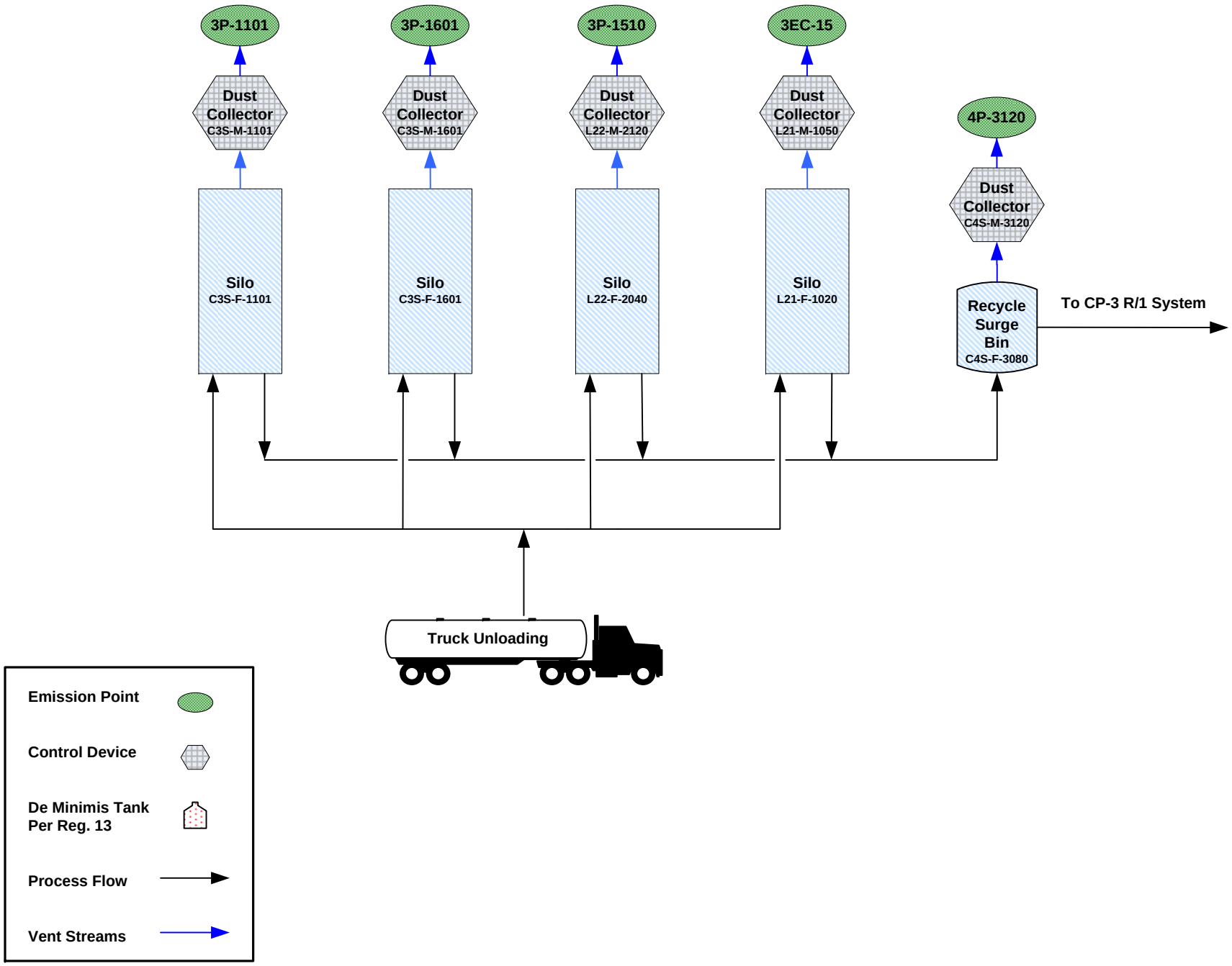

Attachment F – Process Flow Diagram

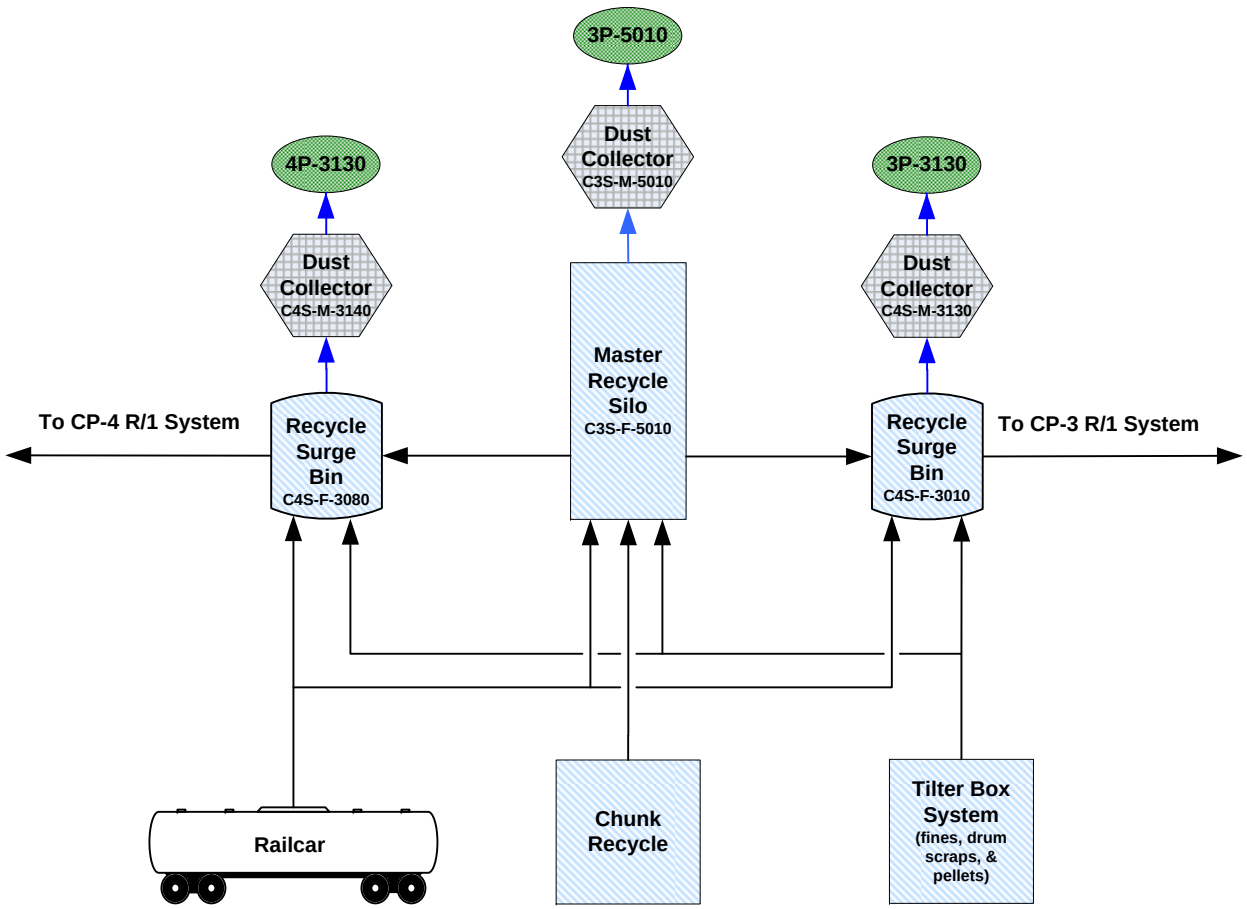

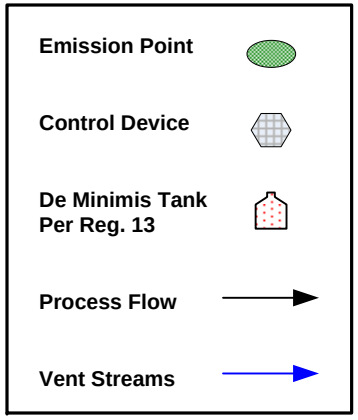

Attachment D

Equipment Tables

ATTACHMENT D - Emission Units Table
(includes all emission units at the facility except those designated as insignificant activities in Section 4, Item 24 of the General Forms)

Emission Point ID	Control Device	Emission Unit ID	Emission Unit Description	Design Capacity	Year Installed
			CP3		
3P-3130	C4S-M-3130 Baghouse	C4S-F-3010	CP3 Recycle Surge Bin	1,170 ft^3	1994
3P-3190	None	C3L-F-3190	CP3 DEG Charge Tank	275 Gallons	1994
3P-155	None	D-155	CP3/CP4 MACT Tank	10,000 Gallons	2001
3P-1070	None	C3L-F-1070	CP3 Recupic EG Tank	12,700 Gallons	1994
3P-1071	None	C3L-F-1071	CP3 Recupic EG Tank	12,700 Gallons	1994
3P-1072	None	C3L-F-1072	CP3 Recupic EG Tank	12,700 Gallons	1994
3P-1032	None	C3L-F-3180	CP3 R/1 Recupic EG Charge Tank	1,730 Gallons	1994
		C3L-F-3140	CP3 R/1 EG Charge Tank	1,730 Gallons	1994
		C3L-F-3150	CP3 R/2 EG Charge Tank	275 Gallons	1994
3P-7020	C3L-F-7020 Seal Pot	C3L-F-6010	CP3/CP4 Catalyst Mix Tank	455 ft^3	2001
		C3L-F-6510	CP3 Catalyst Mix Tank	455 ft^3	2001
		C3L-F-7010	CP3/CP4 Catalyst Feed Tank	455 ft^3	2001
		C3L-F-8010	CP3/CP4 Toner Make-Up Tank	277 ft^3	2001
		C3L-F-9010	CP3/CP4 Toner Charge Tank	277 ft^3	2001
3P-2570	None	C3L-F-2570	CP3 Catalyst Slurry Tank	516 Gallons	1994
3P-2580	None	C3L-F-2580	CP3 Catalyst Slurry Tank	516 Gallons	1994
3P-8	None	UTG-F-3020	CP3 EG Storage Tank	675,000 Gallons	1966
3P-9	None	UTG-F-3010	CP3 EG Storage Tank	675,000 Gallons	1966

[1]For 45CSR13 permitted sources, the numbering system used for the emission points, control devices, and emission units should be consistent with the numbering system used in the 45CSR13 permit. For grandfathered sources, the numbering system should be consistent with registrations or emissions inventory previously submitted to DAQ. For emission points, control devices, and emissions units which have not been previously labeled, use the following 45CSR13 numbering system: 1S, 2S, 3S,... or other appropriate description for emission units; 1C, 2C, 3C,... or other appropriate designation for control devices; 1E, 2E, 3E, ... or other appropriate designation for emission points.

Emission Point ID	Control Device	Emission Unit ID	Emission Unit Description	Design Capacity	Year Installed
3P-1120	None	C3L-F-1120	CP3/CP4 Recupic EG Dump Tank	5,000 Gallons	1994
3P-1210	None	C38-E-1210	CP3 Pellet Dryers	29,600 pph	1994
3P-3210	None	C38-E-3210	CP3 Pellet Dryers	29,600 pph	1994
3P-5210	None	C38-E-5210	CP3 Pellet Dryers	29,600 pph	1994
3P-7210	None	C38-E-7210	CP3 Pellet Dryers	29,600 pph	2007
3P-0200	L4A-M-0200 Baghouse	L4A-F-0200	CP3 Off Spec Silo	8’ x 32’ s/s	1994
3P-0650	None	C3T-F-0650	CP3 Condensate Holding Tank	58 ft^3	1994
3P-1730	None	C3U-F-1730	CP3 R/3 TEG Bath	8” x 30” t/t	1994
3P-1900	None	C3T-F-1900	CP3 Refrigerant Surge Tank	955 Gallons	1994
3P-4620	None	C3T-F-4620	CP3 Condensed Dowtherm Receiver	116 Gallons	1994
3P-1101	C3S-M-1101	C3S-F-1101	Silo	8,000 ft^3	1993
3P-1601	C3S-M-1601 Baghouse	C3S-F-1601	Silo	3,500 ft^3	1988
3EC-15	L21-M-1050 Baghouse	L21-F-1020	Silo	4,000 ft^3	1976
3P-1510	L22-M-2120 Baghouse	L22-F-2040	Silo	4,000 ft^3	1976
3P-5010	C3S-M-5010 Baghouse	C3S-F-5010	Master Recycle Silo	4,000 ft^3	1974
3P-7260	None	C3T-F-7260	CP3 Hot Oil Storage Tank	17,700 Gallons	1994
3P-1600	C3T-B-1600 Hot Oil Heater	C3L-F-2220	CP3 Colorant Make-Up Tank	400 Gallons	1994
		C3L-F-2201	CP3 Colorant Charge Tank	400 Gallons	1994
		C3L-F-3160	CP3 Stabilizer Charge Tank	275 Gallons	1994
		C3L-F-4211	CP3/CP4 Stabilizer Make-Up Tank	400 Gallons	1994

[1]For 45CSR13 permitted sources, the numbering system used for the emission points, control devices, and emission units should be consistent with the numbering system used in the 45CSR13 permit. For grandfathered sources, the numbering system should be consistent with registrations or emissions inventory previously submitted to DAQ. For emission points, control devices, and emissions units which have not been previously labeled, use the following 45CSR13 numbering system: 1S, 2S, 3S,... or other appropriate description for emission units; 1C, 2C, 3C,... or other appropriate designation for control devices; 1E, 2E, 3E, ... or other appropriate designation for emission points.

Emission Point ID	Control Device	Emission Unit ID	Emission Unit Description	Design Capacity	Year Installed
3P-1600	C3T-B-1600 Hot Oil Heater	C3L-F-4100	CP3/CP4 Stabilizer Surge Tank	516 Gallons	1994
		C3L-F-4210	CP3/CP4 Stabilizer Make-Up Tank	400 Gallons	1994
		C3L-F-5040	CP3/CP4 Stabilizer Make-Up Tank	486 Gallons	1994
		C3H-F-3010	CP3 Slurry Mix Tank	607 ft^3	2001
		C3H-F-4010	CP3 Slurry Feed Tank	1,319 ft^3	2001
		C31-E-1020	CP3 R/1 System	2,970 Gallons	1994
		C32-E-1050	CP3 R/2 System	2,970 Gallons	1994
		C33-F-2250	CP3 R/3 System	2,517 Gallons	1994
		C33-F-5010	CP3 R/3 Bis System	2,970 Gallons	2001
		C34-F-3280	CP3 R/4A System	70,000 pph	1994
		C31-F-1220	CP3 R/1 & R/2 Condensate Tank	15,300 pph	1994
		C33-F-2260	CP3 R/3 Condensate Tank	1,409 gpm	1994
		C34-F-2290	CP3 R/4A Condensate Tank	950 gpm	1994
		C34-F-8290	CP3 R/4B Condensate Tank	950 gpm	2007
		C34-F-9280	CP3 R/4B System	70,000 pph	2007
		C3H-F-4020	Seal Pot	5.6 pph	1994
CP4					
4P-1020	C4S-M-1040 Baghouse	C4S-F-1020	CP4 TPA Surge Silo	178 ft^3	1996
4P-2100	C4S-M-2100 Baghouse	C4S-F-2050	CP4 IPA Surge Silo	8’ x 18’ t/s	1996
4P-3130	C4S-M-3140 Baghouse	C4S-F-3080	CP4 Recycle Surge Bin	1,170 ft^3	1999

[1]For 45CSR13 permitted sources, the numbering system used for the emission points, control devices, and emission units should be consistent with the numbering system used in the 45CSR13 permit. For grandfathered sources, the numbering system should be consistent with registrations or emissions inventory previously submitted to DAQ. For emission points, control devices, and emissions units which have not been previously labeled, use the following 45CSR13 numbering system: 1S, 2S, 3S,... or other appropriate description for emission units; 1C, 2C, 3C,... or other appropriate designation for control devices; 1E, 2E, 3E, ... or other appropriate designation for emission points.

Emission Point ID	Control Device	Emission Unit ID	Emission Unit Description	Design Capacity	Year Installed
4P-3190	None	C4L-F-3190	CP4 DEG Charge Tank	275 Gallons	1996
4P-1070	None	C4L-A-1070	CP4 Recupic EG Tank	12,700 Gallons	1996
4P-1071	None	C4L-A-1071	CP4 Recupic EG Tank	12,700 Gallons	1996
4P-1072	None	C4L-A-1072	CP4 Recupic EG Tank	12,700 Gallons	1996
4P-1800	None	C4L-F-1800	CP4 EG Storage Tank	675,000 Gallons	1996
4P-1032	None	C4L-F-3140	CP4 R/1 EG Charge Tank	1,742 Gallons	1996
		C4L-F-3180	CP4 R/1 Recupic EG Charge Tank	1,742 Gallons	1996
4P-1900	None	C4R-F-1900	CP4 Refrigerant Surge Tank	955 Gallons	1996
4P-4620	None	C4T-F-4620	CP4 Condensed Dowtherm Receiver	125 Gallons	1996
4P-1210	None	C48-E-1210	CP4 Pellet Dryers	13,000 pph	1996
4P-3210	None	C48-E-3210	CP4 Pellet Dryers	13,000 pph	1996
4P-5210	None	C48-E-5210	CP4 Pellet Dryers	13,000 pph	1996
4P-0340	C4A-M-0340 Baghouse	C4A-F-0410	CP4/CSS-12/CSS-13 Crystallizer Blending Silo	3,500 ft^3	1994
4P-0200	L4B-M-0200 Baghouse	L4B-F-0200	CP4 Off Spec Silo	8’ x 32’ s/s	1996
4P-4120	None	L24-M-4120	CP4 Pellet Filter Receiver	318 ft^2	1993
4P-1730	None	C4U-F-1710	CP4 R/4 TEG Bath	32” x 60” t/t	1996
4P-1296	None	C4Q-A-1296	CP4 Extruder	4,760 pph	2004
4P-4220	C4Q-M-4140/ C4Q-F-4220 Baghouses	C4Q-F-1290	CP4 Feed Hopper System	0.75 m^3	2004
4P-4180	C4Q-M-4190 Baghouse	C4Q-F-2290	CP4 Feed Hopper System	0.75 m^3	2004

[1]For 45CSR13 permitted sources, the numbering system used for the emission points, control devices, and emission units should be consistent with the numbering system used in the 45CSR13 permit. For grandfathered sources, the numbering system should be consistent with registrations or emissions inventory previously submitted to DAQ. For emission points, control devices, and emissions units which have not been previously labeled, use the following 45CSR13 numbering system: 1S, 2S, 3S,... or other appropriate description for emission units; 1C, 2C, 3C,... or other appropriate designation for control devices; 1E, 2E, 3E, ... or other appropriate designation for emission points.

Emission Point ID	Control Device	Emission Unit ID	Emission Unit Description	Design Capacity	Year Installed
4P-4160	C4Q-M-4160 Baghouse	C4Q-F-3290	CP4 Feed Hopper System	0.75 m^3	2004
4P-1600	C4T-B-1600 Hot Oil Heater	C4L-F-3160	CP4 Stabilizer Charge Tank	275 Gallons	1996
		C4L-F-2120	CP4 Catalyst Charge Tank	275 Gallons	1996
		C4L-F-3170	CP4 Catalyst Charge Tank	830 Gallons	1996
		C41-E-3020	CP4 R/1 System	2,970 Gallons	1996
		C42-E-2050	CP4 R/2 System	2,970 Gallons	1996
		C43-E-3250	CP4 R/3 System	2,970 Gallons	1996
		C44-E-3280	CP4 R/4 System	26,000 Gallons	1996
		C41-F-3220	CP4 R/1 & R/2 Separator	90 Gallons	1996
		C43-F-2260	CP4 R/3 Condensate Tank	1,660 Gallons	1996
		C44-F-2290	CP4 R/4 Condensate Tank	1,660 Gallons	1996
		C4L-F-2200	Make-Up Tank	400 Gallons	1994
		C4L-F-5980	Make-Up Tank	533 Gallons	1994
		C4Q-A-1297	CP4 Extruder	2,800 lb/hr	2007
P-7640	None	F-7640	CP4 Hot Oil Storage Tank	16,725 Gallons	1996
4P-2002	C4Q-M-2002 Baghouse	C4Q-F-5000	CP4 Feed Hopper System	0.75 m^3	2007
4P-0001	C4Q-M-0001/ C4Q-F-0001 Baghouses	C4Q-F-5010	CP4 Feed Bin	530 ft^3	2007

[1]For 45CSR13 permitted sources, the numbering system used for the emission points, control devices, and emission units should be consistent with the numbering system used in the 45CSR13 permit. For grandfathered sources, the numbering system should be consistent with registrations or emissions inventory previously submitted to DAQ. For emission points, control devices, and emissions units which have not been previously labeled, use the following 45CSR13 numbering system: 1S, 2S, 3S,... or other appropriate description for emission units; 1C, 2C, 3C,... or other appropriate designation for control devices; 1E, 2E, 3E, ... or other appropriate designation for emission points.

Emission Point ID	Control Device	Emission Unit ID	Emission Unit Description	Design Capacity	Year Installed
CSS-7					
7P-2601	C2A-M-2601 Baghouse	C2A-F-5410	CSS-7 Crystallizer Surge Bin	3,500 ft^3	1988
7P-2609	C2A-M-5350 Baghouse	C2A-E-5240/ C2A-B-5010	CSS-7 Crystallizer and Heater	13,000 pph/ 1.18 MM Btu/hr	1988
		C2B-B-7020/ C2B-E-5250	CSS-7 Preheater and Heater	13,000 pph/ 1.07 MMBtu/hr	1988
7P-0520	C2D-M-0520 Baghouse	C2D-E-5280	CSS-7 Product Cooler	14,156 acfm	1988
7P-0607	L36-M-0607 Baghouse	L36-F-6040	CSS-7 Box & Bagging Blender	1,500 ft^3	1988
7EC-15	L21-M-1050 Baghouse	L21-F-1020	CSS-7 Off-Spec Silo A	4,000 ft^3	1988
7P-1510	L22-M-2120 Baghouse	L22-F-2040	CSS-7 Off-Spec Silo B	4,000 ft^3	1987
7P-4227A	L14-M-4070 Baghouse	L14-F-4070	CSS-7 Product Storage Silo	4,000 ft^3	1987
7P-4227B	L14-M-4080 Baghouse	L14-F-4080	CSS-7 Product Storage Silo	4,000 ft^3	1987
7P-4030	None	L14-U-4030	CSS-7 Fines Elutriator	150 ft^2	1990
7P-2660	None	L14-F-2660	CSS-7/CSS-8 T-66 Dump Tank	116 Gallons	1994
7P-9002	None	L14-F-9001	CSS-7/CSS-8 Hot Oil Storage Tank	17,700 Gallons	1988
2P-9001	M-2603 Baghouse C2T-B-9001 Hot Oil Heater	C2B-F-5420	CSS-7 Preheater Surge Bin	943 ft^3	1988
		C2B-M-5040	CSS-7 Surge Bin Filter	1,200 acfm	1988
		C2C-R-5060	CSS-7 R/6 Reactor	1,958 ft^3	1988

[1]For 45CSR13 permitted sources, the numbering system used for the emission points, control devices, and emission units should be consistent with the numbering system used in the 45CSR13 permit. For grandfathered sources, the numbering system should be consistent with registrations or emissions inventory previously submitted to DAQ. For emission points, control devices, and emissions units which have not been previously labeled, use the following 45CSR13 numbering system: 1S, 2S, 3S,... or other appropriate description for emission units; 1C, 2C, 3C,... or other appropriate designation for control devices; 1E, 2E, 3E, ... or other appropriate designation for emission points.

Emission Point ID	Control Device	Emission Unit ID	Emission Unit Description	Design Capacity	Year Installed
CSS-8					
8E-02	S8A-M-2390 Baghouse	S8A-F-2430	CSS-8 Crystallizer Surge Bin	1,244 ft^3	1991
8E-03	S8A-M-3350 Baghouse	S8A-E-3240/ S8A-B-3010	CSS-8 Crystallizer and Heater	68.4 ft^2/ 2.15 MMBtu/hr	1991
8E-04	S8B-M-2420 Baghouse	S8B-E-2250/ S8B-B-2020	CSS-8 Preheater and Heater	27.7 ft^2/ 0.98 MMBtu/hr	1991
8E-05	S8D-M-1520 Baghouse	S8D-E-1280	CSS-8 Product Cooler	18,000 pph	1991
8E-06	S8A-M-1590 Baghouse	S8A-M-1610	CSS-8 Refeed Cyclone	1,000 ft^3	1991
		S8E-F-1440	CSS-8 Verification Bin	18,000 pph	1991
8E-08	L37-M-7130 Baghouse	L37-F-7050	CSS-8 Boxing Silo	1,200 ft^3	1991
8E-09	None	L37-P-7130	CSS- 8 Storage Air Classifier	55 lb/ft^3	1991
		L37-M-7150	CSS-8 Fines Elutriator	700 acfm	1991
8EP-204A	L12-M-2030 Baghouse	L12-F-2030	CSS-8 Product Silo	85 ft^2	1987
8EP-204B	L12-M-2040 Baghouse	L12-F-2040	CSS-8 Product Silo	85 ft^2	1987
8P-4127A	L13-M-3050 Baghouse	L13-F-3050	CSS-8 Product Silo	4,000 ft^3	1987
8P-4127B	L13-M-3060 Baghouse	L13-F-3060	CSS-8 Product Silo	4,000 ft^3	1987
8ECS4	L11-M-1010 Baghouse	L11-F-1010	CSS-8/CSS-9 Salvage Silo	4,000 ft^3	1977
8ECS5	L11-M-1020 Baghouse	L11-F-1020	CSS-8 Salvage Silo	4,000 ft^3	1977
8P-1030	None	L11-U-1030	CSS-8 Fines Elutriator	150 ft^2	1991

[1]For 45CSR13 permitted sources, the numbering system used for the emission points, control devices, and emission units should be consistent with the numbering system used in the 45CSR13 permit. For grandfathered sources, the numbering system should be consistent with registrations or emissions inventory previously submitted to DAQ. For emission points, control devices, and emissions units which have not been previously labeled, use the following 45CSR13 numbering system: 1S, 2S, 3S,... or other appropriate description for emission units; 1C, 2C, 3C,... or other appropriate designation for control devices; 1E, 2E, 3E, ... or other appropriate designation for emission points.

Emission Point ID	Control Device	Emission Unit ID	Emission Unit Description	Design Capacity	Year Installed
8P-1050	None	L13-U-3030	CSS-8 Fines Elutriator	150 ft^2	1991
8EP-208	None	L12-M-4030	CSS-8 Fines Elutriator	150 ft^2	1991
2P-9001	C2T-B-9001 Hot Oil Heater	S8A-E-1420	CSS-8 Preheater Surge Bin	930 ft^3	1991
		S8C-R-1060/ S8C-R-3070	CSS-8 Reactor	2,404 ft^3	1991
		C2T-F-2670	T-66 Lites Tank	6,400 gallons	1994
		F-5001	T-66 Tank	NA	1976
CSS-9					
9P-1701A	L15-M-1701A Baghouse	L15-F-1701A	CSS-9 Verification Bin	920 ft^3	1988
9P-1701B	L15-M-1701B Baghouse	L15-F-1701B	CSS-9 Verification Bin	920 ft^3	1988
9P-5090	None	L15-U-5090	CSS-9 Fines Elutriator	150 ft^2	1991
9P-2701A	L15-M-2701A Baghouse	L15-F-2701A	CSS-9 Product Silo	4,000 ft^3	1988
9P-2701B	L15-M-2701B Baghouse	L15-F-2701B	CSS-9 Product Silo	4,000 ft^3	1988
9P-6110	None	L15-U-6110	CSS-9 Fines Elutriator	150 ft^2	1991
9E-10	L17-M-7230 Baghouse	L17-F-7130	CSS-9 Product Silo	4,000 ft^3	1991
		L17-F-7140	CSS-9 Product Silo	4,000 ft^3	1991
9E-11	None	L17-M-7240	CSS-9 Fines Elutriator	700 acfm	1991
9ECS5	L15-M-1020 Baghouse	L15-F-1020	CSS-9 Salvage Silo	4,000 ft^3	1977
9P-1030	None	L15-U-1030	CSS-9 Fines Elutriator	150 ft^2	1991

[1]For 45CSR13 permitted sources, the numbering system used for the emission points, control devices, and emission units should be consistent with the numbering system used in the 45CSR13 permit. For grandfathered sources, the numbering system should be consistent with registrations or emissions inventory previously submitted to DAQ. For emission points, control devices, and emissions units which have not been previously labeled, use the following 45CSR13 numbering system: 1S, 2S, 3S,... or other appropriate description for emission units; 1C, 2C, 3C,... or other appropriate designation for control devices; 1E, 2E, 3E, ... or other appropriate designation for emission points.

Emission Point ID	Control Device	Emission Unit ID	Emission Unit Description	Design Capacity	Year Installed
			CSS-10		
10P-1340	C3A-M-1340 Baghouse	C3A-F-1410	CSS-10 Crystallizer Blending Silo	3,500 ft^3	1994
10P-2390	C3A-M-2390 Baghouse	C3A-F-2460	CSS-10 Crystallizer Surge Bin	1,570 ft^3	1994
10P-3350	C3A-M-3350 Baghouse	C3A-E-3240	CSS-10 Crystallizer and Heater	93.5 ft^2/ 1.54 MMBtu/hr	1994
10P-1130	L1A-M-1130 Baghouse	L1A-F-1090	CSS-10 Product Silo	4,000 ft^3	1994
		L1A-F-1100	CSS-10 Product Silo	4,000 ft^3	1994
10P-0520	C3D-M-0520 Baghouse	C3D-E-1280	CSS-10 Product Cooler	18,000 pph	1994
		C3D-E-5280	CSS-11 Product Cooler	18,000 pph	1994
10P-2420	C3B-M-2420 Baghouse	C3B-E-2250	CSS-10 Preheater and Heater	27.7 ft^2/ 0.66 MMBtu/hr	1994
10P-1590	C3E-M-1590 Baghouse	C3E-F-1440	CSS-10 Verification Bin	1,450 ft^3	1994
10P-1050	L3A-M-1050 Baghouse	L3A-F-1030	CSS-10 Box & Bagging Blender	1,200 ft^3	1994
10P-1100	None	L3A-M-1070	CSS-10 Fines Elutriator	150 ft^2	1994
10P-1140	None	L1A-M-1140	CSS-10 Fines Elutriator	150 ft^2	1994
3P-1600	C3B-M-1430 Baghouse C3T-B-1600 Hot Oil Heater	C3B-F-1420	CSS-10 Preheater Surge Bin	785 ft^3	1994
	C3T-B-1600 Hot Oil Heater	C3C-R-1060	CSS-10 R/6 Reactors & Heater	2,404 ft^3	1994

[1]For 45CSR13 permitted sources, the numbering system used for the emission points, control devices, and emission units should be consistent with the numbering system used in the 45CSR13 permit. For grandfathered sources, the numbering system should be consistent with registrations or emissions inventory previously submitted to DAQ. For emission points, control devices, and emissions units which have not been previously labeled, use the following 45CSR13 numbering system: 1S, 2S, 3S,... or other appropriate description for emission units; 1C, 2C, 3C,... or other appropriate designation for control devices; 1E, 2E, 3E, ... or other appropriate designation for emission points.

Emission Point ID	Control Device	Emission Unit ID	Emission Unit Description	Design Capacity	Year Installed
CSS-11					
11P-6340	C3A-M-6340 Baghouse	C3A-F-5410	CSS-11 Crystallizer Blending Silo	3,500 ft^3	1994
11P-6390	C3A-M-6390 Baghouse	C3A-F-5460	CSS-11 Crystallizer Surge Bin	1,244 ft^3	1994
11P-7350	C3A-M-7350 Baghouse	C3A-E-7240	CSS-11 Crystallizer and Heater	93.5 ft^2/ 1.54 MMBtu/hr	1994
11P-6420	C3B-M-6420 Baghouse	C3B-E-6250	CSS-11 Preheater and Heater	27.7 ft^2/ 0.66 MMBtu/hr	1994
11P-5590	C3E-M-5590 Baghouse	C3E-F-5440	CSS-11 Verification Bin	1,450 ft^3	1994
11P-1090	L3B-M-2060 Baghouse	L3B-F-2040	CSS-11 Box and Bagging Blender	1,200 ft^3	1994
11P-1080	None	L3B-M-2080	CSS-11 Fines Elutriator	150 ft^2	1994
11P-1160	L1B-M-1160 Baghouse	L1B-F-2115	CSS-11 Product Silo	4,000 ft^3	1994
		L1B-F-2160	CSS-11 Product Silo	4,000 ft^3	1994
11P-2170	None	L1B-M-2170	CSS-11 Fines Elutriator	150 ft^2	1994
3P-1600	C3B-M-5430 Baghouse C3T-B-1600 Hot Oil Heater	C3B-F-5420	CSS-11 Preheater Surge Bin	785 ft^3	1994
	C3T-B-1600 Hot Oil Heater	C3C-R-5060	CSS-11 R/6 Reactors & Heater	2,404 ft^3	1994
CSS-12					
12P-2390	C4A-M-2390 Baghouse	C4A-F-2460	CSS-12 Crystallizer Surge Bin	1,570 ft^3	1996
12P-3350	C4A-M-3350 Baghouse	C4A-E-3240	CSS-12 Crystallizer & Heater	93.5 ft^2/ 2.04 MMBtu/hr	1996

[1]For 45CSR13 permitted sources, the numbering system used for the emission points, control devices, and emission units should be consistent with the numbering system used in the 45CSR13 permit. For grandfathered sources, the numbering system should be consistent with registrations or emissions inventory previously submitted to DAQ. For emission points, control devices, and emissions units which have not been previously labeled, use the following 45CSR13 numbering system: 1S, 2S, 3S,... or other appropriate description for emission units; 1C, 2C, 3C,... or other appropriate designation for control devices; 1E, 2E, 3E, ... or other appropriate designation for emission points.

Emission Point ID	Control Device	Emission Unit ID	Emission Unit Description	Design Capacity	Year Installed
12P-2420	C4B-M-2420 Baghouse	C4B-E-2250	CSS-12 Preheater and Heater	43 ft^2/ 0.87 MMBtu/hr	1996
12P-0520	C4D-M-0520 Baghouse	C4D-E-1280	CSS-12 Product Cooler	42.6 ft^2	1996
		C4D-E-5280	CSS-13 Product Cooler	42.6 ft^2	1996
12P-1590	C4E-M-1590 Baghouse	C4E-F-1440	CSS-12 Verification Bin	1,450 ft^3	1996
12P-1130	L1C-M-1130 Baghouse	L1C-F-1090	CSS-12 Product Silo	4,000 ft^3	1996
		L1C-F-1110	CSS-12 Product Silo	4,000 ft^3	1996
12P-1140	None	L1C-M-1140	CSS-12 Fines Elutriator	150 ft^2	1996
12P-0390	L4C-M-0390 Baghouse	L4C-F-0210	CSS-12/CSS-13 Salvage Silo	1,500 ft^2	1996
12P-2060	L3B-M-2060 Baghouse	L3B-F-2040	CSS-12/CSS-13 Boxing & Bagging Blender	1,200 ft^2	1996
12P-2080	None	L3B-M-2080	CSS-12 Fines Elutriator	150 ft^2	1996
4P-1600	C4B-M-1430 Baghouse	C4B-F-1420	CSS-12 Preheater Surge Bin	785 ft^2	1996
	C4T-B-1600 Hot Oil Heater	C4C-R-3070	CSS-12 Reactor	2,110 ft^3	1996
	C4T-B-1600 Hot Oil Heater	C4C-R-1060 C4C-E-2320	CSS-12 Reactor & Reheater	1,958 ft^3	1996
CSS-13					
13P-6390	C4A-M-6390 Baghouse	C4A-F-6460	CSS-13 Crystallizer Surge Bin	1,570 ft^3	1996
13P-7350	C4A-M-7350 Baghouse	C4A-E-7240	CSS-13 Crystallizer & Heater	93.5 ft^2/ 2.04 MMBtu/hr	1996
12P-6420	C4B-M-6420 Baghouse	C4B-E-6250	CSS-13 Preheater & Heater	43 ft^2/ 0.87 MMBtu/hr	1996

[1]For 45CSR13 permitted sources, the numbering system used for the emission points, control devices, and emission units should be consistent with the numbering system used in the 45CSR13 permit. For grandfathered sources, the numbering system should be consistent with registrations or emissions inventory previously submitted to DAQ. For emission points, control devices, and emissions units which have not been previously labeled, use the following 45CSR13 numbering system: 1S, 2S, 3S,... or other appropriate description for emission units; 1C, 2C, 3C,... or other appropriate designation for control devices; 1E, 2E, 3E, ... or other appropriate designation for emission points.

Emission Point ID	Control Device	Emission Unit ID	Emission Unit Description	Design Capacity	Year Installed
13P-5590	C4E-M-5590 Baghouse	C4E-F-5440	CSS-13 Verification Bin	1,450 ft^3	1996
13P-2080	None	C4E-M-2080	CSS-13 Fines Elutriator	150 ft^2	1996
13P-1130	L1C-M-1130 Baghouse	L1D-F-1110	CSS-13 Product Storage	4,000 ft^3	1996
		L1D-F-1120	CSS-13 Product Storage	4,000 ft^3	1996
13P-1170	None	L1D-M-1130	CSS-13 Fines Elutriator	150 ft^2	1996
4P-1600	C4B-M-5430 Baghouse C4T-B-1600 Hot Oil Heater	C4B-F-5420	CSS-13 Preheater Surge Bin	1,390 ft^3	1996
		E-7070	CSS-13 Reactor	2,110 ft^3	1996
	C4T-B-1600 Hot Oil Heater	C4C-R-5060 C4C-E-6320	CSS-13 Reactor & Reheater	1,958 ft^3	1996
Hot Oil Heaters					
3P-1600	None	C3T-B-1600	Hot Oil Heater	53.1 MMBtu/hr	1994
4P-1600	None	C4T-B-1600	Hot Oil Heater	53.1 MMBtu/hr	1996
2P-9001	None	C2T-B-9001	Hot Oil Heater	24 MMBtu/hr	1988
3P-1700	None	C3T-F-1700	Hot Oil Heater	23.0 MMBtu/hr	2007
Boilers and Heaters					
U-B-2010	None	UGS-B-2010	WWTP Portable Boiler	4.19 MMBtu/hr	2009
U-B-3010	None	UGS-B-3010	Front Office Hot Water Boiler	0.9 MMBtu/hr	2009
U-B-3011	None	UGS-B-3011	Front Office Hot Water Boiler	0.9 MMBtu/hr	2009
U-B-4010	None	UGS-B-4010	CP-2 Ops Center Hot Water Boiler	1.6 MMBtu/hr	2009
U-B-4011	None	UGS-B-4011	CP-2 Ops Center Hot Water Boiler	1.6 MMBtu/hr	2009
U-B-1050	None	UGS-B-1050	D-155 Space Heater	0.26 MMBtu/hr	2009
U-B-1060	None	UGS-B-1060	D-155 Space Heater	0.26 MMBtu/hr	2009
U-B-1004	None	UUG-B-1004	Utility Space Heater	0.26 MMBtu/hr	2009
U-B-1005	None	UUG-B-1005	Utility Space Heater	0.26 MMBtu/hr	2009
U-B-1006	None	UUG-B-1006	Utility Space Heater	0.26 MMBtu/hr	2009

[1]For 45CSR13 permitted sources, the numbering system used for the emission points, control devices, and emission units should be consistent with the numbering system used in the 45CSR13 permit. For grandfathered sources, the numbering system should be consistent with registrations or emissions inventory previously submitted to DAQ. For emission points, control devices, and emissions units which have not been previously labeled, use the following 45CSR13 numbering system: 1S, 2S, 3S,... or other appropriate description for emission units; 1C, 2C, 3C,... or other appropriate designation for control devices; 1E, 2E, 3E, ... or other appropriate designation for emission points.

Emission Point ID	Control Device	Emission Unit ID	Emission Unit Description	Design Capacity	Year Installed
U-B-1007	None	UUG-B-1007	Utility Space Heater	0.26 MMBtu/hr	2009
U-B-4001	None	UGS-B-4001	CP-2 A/C Room Space Heater	0.26 MMBtu/hr	2009
U-B-4002	None	UGS-B-4002	CP-2 A/C Room Space Heater	0.26 MMBtu/hr	2009
U-B-4003	None	UGS-B-4003	Utility Space Heater	0.26 MMBtu/hr	2009
U-B-4004	None	UGS-B-4004	Utility Space Heater	0.26 MMBtu/hr	2009
Warehouse					
WF-6010	MWB-F-1080	L26-F-6010	Warehouse – West Silo	750 ft^3	1959
D56	None	MW11717	Warehouse Railcar Unloading System	NA	1976

[1]For 45CSR13 permitted sources, the numbering system used for the emission points, control devices, and emission units should be consistent with the numbering system used in the 45CSR13 permit. For grandfathered sources, the numbering system should be consistent with registrations or emissions inventory previously submitted to DAQ. For emission points, control devices, and emissions units which have not been previously labeled, use the following 45CSR13 numbering system: 1S, 2S, 3S,... or other appropriate description for emission units; 1C, 2C, 3C,... or other appropriate designation for control devices; 1E, 2E, 3E, ... or other appropriate designation for emission points.

Attachment E

Emission Unit Forms

CP-3

ATTACHMENT E - Emission Unit Form

Emission Unit Description

Emission unit ID number:	**Emission unit name:**	**List any control devices associated with this emission unit:**
C3L-F-6510	CP-3 & CP-4 Catalyst Mix Tank	NA

Provide a description of the emission unit (type, method of operation, design parameters, etc.):
CP-3 & CP-4 Catalyst Mix Tank

Manufacturer:	**Model number:**	**Serial number:**
NA	NA	NA
Construction date:	**Installation date:**	**Modification date(s):**
NA	2001	NA

Design Capacity (examples: furnaces - tons/hr, tanks - gallons):
455 ft^3

Maximum Hourly Throughput:	**Maximum Annual Throughput:**	**Maximum Operating Schedule:**
1,400 gph	3.2 mmgal/yr	8,760 hr/yr

Fuel Usage Data **(fill out all applicable fields)**

Does this emission unit combust fuel? ___ Yes X No	**If yes, is it?** ___ Indirect Fired ___Direct Fired
Maximum design heat input and/or maximum horsepower rating: NA	**Type and Btu/hr rating of burners:** NA

List the primary fuel type(s) and if applicable, the secondary fuel type(s). For each fuel type listed, provide the maximum hourly and annual fuel usage for each.
NA

Describe each fuel expected to be used during the term of the permit.

Fuel Type	Max. Sulfur Content	Max. Ash Content	BTU Value
NA	NA	NA	NA

Emissions Data		
Criteria Pollutants	Potential Emissions	
	PPH	TPY
Carbon Monoxide (CO)	See emissions from Seal Pot C3L-F-7020.	
Nitrogen Oxides (NO_X)		
Lead (Pb)		
Particulate Matter ($PM_{2.5}$)		
Particulate Matter (PM_{10})		
Total Particulate Matter (TSP)		
Sulfur Dioxide (SO_2)		
Volatile Organic Compounds (VOC)		
Hazardous Air Pollutants	Potential Emissions	
	PPH	TPY
See emissions from Seal Pot C3L-F-7020.		
Regulated Pollutants other than Criteria and HAP	Potential Emissions	
	PPH	TPY
NA	NA	NA

List the method(s) used to calculate the potential emissions (include dates of any stack tests conducted, versions of software used, source and dates of emission factors, etc.).

Engineering Estimate

Applicable Requirements
List all applicable requirements for this emission unit. For each applicable requirement, include the underlying rule/regulation citation and/or construction permit with the condition number. (*Note: Title V permit condition numbers alone are not the underlying applicable requirements*). If an emission limit is calculated based on the type of source and design capacity or if a standard is based on a design parameter, this information should also be included. NA
X Permit Shield
For all applicable requirements listed above, provide monitoring/testing/recordkeeping/reporting which shall be used to demonstrate compliance. If the method is based on a permit or rule, include the condition number or citation. (Note: Each requirement listed above must have an associated method of demonstrating compliance. If there is not already a required method in place, then a method must be proposed.) NA
Are you in compliance with all applicable requirements for this emission unit? X Yes ___No If no, complete the **Schedule of Compliance Form** as **ATTACHMENT F**.

ATTACHMENT E - Emission Unit Form

Emission Unit Description

Emission unit ID number:	**Emission unit name:**	**List any control devices associated with this emission unit:**
C3L-F-8010	CP-3 & CP-4 Toner Make-Up Tank	NA

Provide a description of the emission unit (type, method of operation, design parameters, etc.):
CP-3 & CP-4 Toner Make-Up Tank

Manufacturer:	**Model number:**	**Serial number:**
NA	NA	NA
Construction date:	**Installation date:**	**Modification date(s):**
NA	2001	NA

Design Capacity (examples: furnaces - tons/hr, tanks - gallons):
277 ft^3

Maximum Hourly Throughput:	**Maximum Annual Throughput:**	**Maximum Operating Schedule:**
NA	NA	8,760 hr/yr

Fuel Usage Data **(fill out all applicable fields)**

Does this emission unit combust fuel? ___ Yes X No	**If yes, is it?** ___ Indirect Fired ___Direct Fired
Maximum design heat input and/or maximum horsepower rating: NA	**Type and Btu/hr rating of burners:** NA

List the primary fuel type(s) and if applicable, the secondary fuel type(s). For each fuel type listed, provide the maximum hourly and annual fuel usage for each.
NA

Describe each fuel expected to be used during the term of the permit.

Fuel Type	Max. Sulfur Content	Max. Ash Content	BTU Value
NA	NA	NA	NA

Emissions Data		
Criteria Pollutants	Potential Emissions	
	PPH	TPY
Carbon Monoxide (CO)	See emissions from Seal Pot C3L-F-7020.	
Nitrogen Oxides (NO_X)		
Lead (Pb)		
Particulate Matter ($PM_{2.5}$)		
Particulate Matter (PM_{10})		
Total Particulate Matter (TSP)		
Sulfur Dioxide (SO_2)		
Volatile Organic Compounds (VOC)		
Hazardous Air Pollutants	Potential Emissions	
	PPH	TPY
See emissions from Seal Pot C3L-F-7020.		
Regulated Pollutants other than Criteria and HAP	Potential Emissions	
	PPH	TPY
NA	NA	NA

List the method(s) used to calculate the potential emissions (include dates of any stack tests conducted, versions of software used, source and dates of emission factors, etc.).

Engineering Estimate

Applicable Requirements
List all applicable requirements for this emission unit. For each applicable requirement, include the underlying rule/regulation citation and/or <u>construction permit</u> with the condition number. (*Note: Title V permit condition numbers alone are not the underlying applicable requirements*). If an emission limit is calculated based on the type of source and design capacity or if a standard is based on a design parameter, this information should also be included. NA
<u>X</u> Permit Shield
For all applicable requirements listed above, provide monitoring/testing/recordkeeping/reporting which shall be used to demonstrate compliance. If the method is based on a permit or rule, include the condition number or citation. (Note: Each requirement listed above must have an associated method of demonstrating compliance. If there is not already a required method in place, then a method must be proposed.) NA
Are you in compliance with all applicable requirements for this emission unit? <u>X</u> Yes ___No If no, complete the **Schedule of Compliance Form** as **ATTACHMENT F**.

ATTACHMENT E - Emission Unit Form

Emission Unit Description

Emission unit ID number:	**Emission unit name:**	**List any control devices associated with this emission unit:**
C3L-F-2570	CP-3 Catalyst Slurry Tank	NA

Provide a description of the emission unit (type, method of operation, design parameters, etc.):
CP-3 Catalyst Slurry Tank

Manufacturer:	**Model number:**	**Serial number:**
NA	NA	NA
Construction date:	**Installation date:**	**Modification date(s):**
NA	1994	NA

Design Capacity (examples: furnaces - tons/hr, tanks - gallons):
516 gallons

Maximum Hourly Throughput:	**Maximum Annual Throughput:**	**Maximum Operating Schedule:**
140 lb/hr	613tpy	8,760 hr/yr

Fuel Usage Data **(fill out all applicable fields)**

Does this emission unit combust fuel? ___ Yes X No	**If yes, is it?** ___ Indirect Fired ___Direct Fired
Maximum design heat input and/or maximum horsepower rating: NA	**Type and Btu/hr rating of burners:** NA

List the primary fuel type(s) and if applicable, the secondary fuel type(s). For each fuel type listed, provide the maximum hourly and annual fuel usage for each.
NA

Describe each fuel expected to be used during the term of the permit.

Fuel Type	Max. Sulfur Content	Max. Ash Content	BTU Value
NA	NA	NA	NA

Emissions Data		
Criteria Pollutants	Potential Emissions	
	PPH	TPY
Carbon Monoxide (CO)	NA	NA
Nitrogen Oxides (NO_X)	NA	NA
Lead (Pb)	NA	NA
Particulate Matter ($PM_{2.5}$)	NA	NA
Particulate Matter (PM_{10})	NA	NA
Total Particulate Matter (TSP)	NA	NA
Sulfur Dioxide (SO_2)	NA	NA
Volatile Organic Compounds (VOC)	0.03	<0.001
Hazardous Air Pollutants	Potential Emissions	
	PPH	TPY
Ethylene Glycol	0.03	<0.001
Regulated Pollutants other than Criteria and HAP	Potential Emissions	
	PPH	TPY
NA	NA	NA

List the method(s) used to calculate the potential emissions (include dates of any stack tests conducted, versions of software used, source and dates of emission factors, etc.).

Engineering Estimate

Applicable Requirements

List all applicable requirements for this emission unit. For each applicable requirement, include the underlying rule/regulation citation and/or construction permit with the condition number. (*Note: Title V permit condition numbers alone are not the underlying applicable requirements*). If an emission limit is calculated based on the type of source and design capacity or if a standard is based on a design parameter, this information should also be included.

40CFR §63.1316(b)(2)(i); 40CFR §63.1316(b)(2)(i)(A); R13-1650K §4.1.15:

- Organic HAP emissions from all continuous process vents associated with esterification vessels ≤ 0.04 kg organic HAP per Mg of product.

X Permit Shield

For all applicable requirements listed above, provide monitoring/testing/recordkeeping/reporting which shall be used to demonstrate compliance. If the method is based on a permit or rule, include the condition number or citation. (Note: Each requirement listed above must have an associated method of demonstrating compliance. If there is not already a required method in place, then a method must be proposed.)

Monitoring:

- Control device comply with applicable provisions of 40CFR §63.114.

Are you in compliance with all applicable requirements for this emission unit? X Yes ___No

If no, complete the **Schedule of Compliance Form** as **ATTACHMENT F**.

ATTACHMENT E - Emission Unit Form

Emission Unit Description

Emission unit ID number:	**Emission unit name:**	**List any control devices associated with this emission unit:**
C3L-F-2580	CP-3 Catalyst Slurry Tank	NA

Provide a description of the emission unit (type, method of operation, design parameters, etc.):
CP-3 Catalyst Slurry Tank

Manufacturer:	**Model number:**	**Serial number:**
NA	NA	NA
Construction date:	**Installation date:**	**Modification date(s):**
NA	1994	NA

Design Capacity (examples: furnaces - tons/hr, tanks - gallons):
516 gallons

Maximum Hourly Throughput:	**Maximum Annual Throughput:**	**Maximum Operating Schedule:**
140 lb/hr	613 tpy	8,760 hr/yr

Fuel Usage Data **(fill out all applicable fields)**

Does this emission unit combust fuel? ___ Yes X No	**If yes, is it?** ___ Indirect Fired ___Direct Fired
Maximum design heat input and/or maximum horsepower rating: NA	**Type and Btu/hr rating of burners:** NA

List the primary fuel type(s) and if applicable, the secondary fuel type(s). For each fuel type listed, provide the maximum hourly and annual fuel usage for each.
NA

Describe each fuel expected to be used during the term of the permit.

Fuel Type	Max. Sulfur Content	Max. Ash Content	BTU Value
NA	NA	NA	NA

Emissions Data		
Criteria Pollutants	Potential Emissions	
	PPH	TPY
Carbon Monoxide (CO)	NA	NA
Nitrogen Oxides (NO_X)	NA	NA
Lead (Pb)	NA	NA
Particulate Matter ($PM_{2.5}$)	NA	NA
Particulate Matter (PM_{10})	NA	NA
Total Particulate Matter (TSP)	NA	NA
Sulfur Dioxide (SO_2)	NA	NA
Volatile Organic Compounds (VOC)	0.03	<0.001
Hazardous Air Pollutants	Potential Emissions	
	PPH	TPY
Ethylene Glycol	0.03	<0.001
Regulated Pollutants other than Criteria and HAP	Potential Emissions	
	PPH	TPY
NA	NA	NA

List the method(s) used to calculate the potential emissions (include dates of any stack tests conducted, versions of software used, source and dates of emission factors, etc.).

Engineering Estimate

Applicable Requirements

List all applicable requirements for this emission unit. For each applicable requirement, include the underlying rule/regulation citation and/or construction permit with the condition number. (*Note: Title V permit condition numbers alone are not the underlying applicable requirements*). If an emission limit is calculated based on the type of source and design capacity or if a standard is based on a design parameter, this information should also be included.

40CFR §63.1316(b)(2)(i); 40CFR §63.1316(b)(2)(i)(A); R13-1650K §4.1.15:

- Organic HAP emissions from all continuous process vents associated with esterification vessels ≤ 0.04 kg organic HAP per Mg of product.

X Permit Shield

For all applicable requirements listed above, provide monitoring/testing/recordkeeping/reporting which shall be used to demonstrate compliance. If the method is based on a permit or rule, include the condition number or citation. (Note: Each requirement listed above must have an associated method of demonstrating compliance. If there is not already a required method in place, then a method must be proposed.)

Monitoring:

- Control device comply with applicable provisions of 40CFR §63.114.

Are you in compliance with all applicable requirements for this emission unit? X Yes ___No

If no, complete the **Schedule of Compliance Form** as **ATTACHMENT F**.

ATTACHMENT E - Emission Unit Form

Emission Unit Description

Emission unit ID number:	**Emission unit name:**	**List any control devices associated with this emission unit:**
C3L-F-2201	CP-3 Colorant Charge Tank	C3T-B-1600

Provide a description of the emission unit (type, method of operation, design parameters, etc.):
CP-3 Colorant Charge Tank

Manufacturer:	**Model number:**	**Serial number:**
NA	NA	NA
Construction date:	**Installation date:**	**Modification date(s):**
NA	1994	NA

Design Capacity (examples: furnaces - tons/hr, tanks - gallons):
400 gallons

Maximum Hourly Throughput:	**Maximum Annual Throughput:**	**Maximum Operating Schedule:**
NA	NA	8,760 hr/yr

Fuel Usage Data **(fill out all applicable fields)**

Does this emission unit combust fuel? ___ Yes X No	**If yes, is it?** ___ Indirect Fired ___Direct Fired
Maximum design heat input and/or maximum horsepower rating: NA	**Type and Btu/hr rating of burners:** NA

List the primary fuel type(s) and if applicable, the secondary fuel type(s). For each fuel type listed, provide the maximum hourly and annual fuel usage for each.
NA

Describe each fuel expected to be used during the term of the permit.

Fuel Type	Max. Sulfur Content	Max. Ash Content	BTU Value
NA	NA	NA	NA

Emissions Data		
Criteria Pollutants	Potential Emissions	
	PPH	TPY
Carbon Monoxide (CO)	See emissions from Hot Oil Heater C3T-B-1600.	
Nitrogen Oxides (NO_X)		
Lead (Pb)		
Particulate Matter ($PM_{2.5}$)		
Particulate Matter (PM_{10})		
Total Particulate Matter (TSP)		
Sulfur Dioxide (SO_2)		
Volatile Organic Compounds (VOC)		
Hazardous Air Pollutants	Potential Emissions	
	PPH	TPY
See emissions from Hot Oil Heater C3T-B-1600.		
Regulated Pollutants other than Criteria and HAP	Potential Emissions	
	PPH	TPY
NA	NA	NA

List the method(s) used to calculate the potential emissions (include dates of any stack tests conducted, versions of software used, source and dates of emission factors, etc.).

Engineering Estimate

Applicable Requirements
List all applicable requirements for this emission unit. For each applicable requirement, include the underlying rule/regulation citation and/or <u>construction permit</u> with the condition number. (*Note: Title V permit condition numbers alone are not the underlying applicable requirements*). If an emission limit is calculated based on the type of source and design capacity or if a standard is based on a design parameter, this information should also be included. NA
<u>X</u> Permit Shield
For all applicable requirements listed above, provide monitoring/testing/recordkeeping/reporting which shall be used to demonstrate compliance. If the method is based on a permit or rule, include the condition number or citation. (Note: Each requirement listed above must have an associated method of demonstrating compliance. If there is not already a required method in place, then a method must be proposed.) NA
Are you in compliance with all applicable requirements for this emission unit? <u>X</u> Yes ___No If no, complete the **Schedule of Compliance Form** as **ATTACHMENT F**.

ATTACHMENT E - Emission Unit Form

Emission Unit Description

Emission unit ID number:	**Emission unit name:**	**List any control devices associated with this emission unit:**
C3L-F-2200	CP-3 Colorant Make-Up Tank	C3T-B-1600

Provide a description of the emission unit (type, method of operation, design parameters, etc.):
CP-3 Colorant Make-Up Tank

Manufacturer:	**Model number:**	**Serial number:**
NA	NA	NA
Construction date:	**Installation date:**	**Modification date(s):**
NA	1994	NA

Design Capacity (examples: furnaces - tons/hr, tanks - gallons):
400 gallons

Maximum Hourly Throughput:	**Maximum Annual Throughput:**	**Maximum Operating Schedule:**
NA	NA	8,760 hr/yr

Fuel Usage Data **(fill out all applicable fields)**

Does this emission unit combust fuel? ___ Yes X No	**If yes, is it?** ___ Indirect Fired ___Direct Fired
Maximum design heat input and/or maximum horsepower rating: NA	**Type and Btu/hr rating of burners:** NA

List the primary fuel type(s) and if applicable, the secondary fuel type(s). For each fuel type listed, provide the maximum hourly and annual fuel usage for each.
NA

Describe each fuel expected to be used during the term of the permit.

Fuel Type	Max. Sulfur Content	Max. Ash Content	BTU Value
NA	NA	NA	NA

Emissions Data		
Criteria Pollutants	Potential Emissions	
	PPH	TPY
Carbon Monoxide (CO)	See emissions from Hot Oil Heater C3T-B-1600.	
Nitrogen Oxides (NO_X)		
Lead (Pb)		
Particulate Matter ($PM_{2.5}$)		
Particulate Matter (PM_{10})		
Total Particulate Matter (TSP)		
Sulfur Dioxide (SO_2)		
Volatile Organic Compounds (VOC)		
Hazardous Air Pollutants	Potential Emissions	
	PPH	TPY
See emissions from Hot Oil Heater C3T-B-1600.		
Regulated Pollutants other than Criteria and HAP	Potential Emissions	
	PPH	TPY
NA	NA	NA

List the method(s) used to calculate the potential emissions (include dates of any stack tests conducted, versions of software used, source and dates of emission factors, etc.).

Engineering Estimate

Applicable Requirements
List all applicable requirements for this emission unit. For each applicable requirement, include the underlying rule/regulation citation and/or construction permit with the condition number. (*Note: Title V permit condition numbers alone are not the underlying applicable requirements*). If an emission limit is calculated based on the type of source and design capacity or if a standard is based on a design parameter, this information should also be included. NA
X Permit Shield
For all applicable requirements listed above, provide monitoring/testing/recordkeeping/reporting which shall be used to demonstrate compliance. If the method is based on a permit or rule, include the condition number or citation. (Note: Each requirement listed above must have an associated method of demonstrating compliance. If there is not already a required method in place, then a method must be proposed.) NA
Are you in compliance with all applicable requirements for this emission unit? X Yes ___No If no, complete the **Schedule of Compliance Form** as **ATTACHMENT F**.

ATTACHMENT E - Emission Unit Form

Emission Unit Description

Emission unit ID number:	**Emission unit name:**	**List any control devices associated with this emission unit:**
C3T-F-0650	CP-3 Condensate Holding Tank	NA

Provide a description of the emission unit (type, method of operation, design parameters, etc.):
CP-3 Condensate Holding Tank

Manufacturer:	**Model number:**	**Serial number:**
NA	NA	NA
Construction date:	**Installation date:**	**Modification date(s):**
NA	1994	NA

Design Capacity (examples: furnaces - tons/hr, tanks - gallons):
58 ft^3

Maximum Hourly Throughput:	**Maximum Annual Throughput:**	**Maximum Operating Schedule:**
1 gph	8,760 gpy	8,760 hr/yr

Fuel Usage Data **(fill out all applicable fields)**

Does this emission unit combust fuel? ___ Yes X No	**If yes, is it?** ___ Indirect Fired ___Direct Fired
Maximum design heat input and/or maximum horsepower rating: NA	**Type and Btu/hr rating of burners:** NA

List the primary fuel type(s) and if applicable, the secondary fuel type(s). For each fuel type listed, provide the maximum hourly and annual fuel usage for each.
NA

Describe each fuel expected to be used during the term of the permit.

Fuel Type	Max. Sulfur Content	Max. Ash Content	BTU Value
NA	NA	NA	NA

Emissions Data		
Criteria Pollutants	Potential Emissions	
	PPH	TPY
Carbon Monoxide (CO)	NA	NA
Nitrogen Oxides (NO_X)	NA	NA
Lead (Pb)	NA	NA
Particulate Matter ($PM_{2.5}$)	NA	NA
Particulate Matter (PM_{10})	NA	NA
Total Particulate Matter (TSP)	NA	NA
Sulfur Dioxide (SO_2)	NA	NA
Volatile Organic Compounds (VOC)	<0.001	<0.001
Hazardous Air Pollutants	Potential Emissions	
	PPH	TPY
Ethylene Glycol	<0.001	<0.001
Regulated Pollutants other than Criteria and HAP	Potential Emissions	
	PPH	TPY
NA	NA	NA

List the method(s) used to calculate the potential emissions (include dates of any stack tests conducted, versions of software used, source and dates of emission factors, etc.).

Engineering Estimate

Applicable Requirements
List all applicable requirements for this emission unit. For each applicable requirement, include the underlying rule/regulation citation and/or construction permit with the condition number. (*Note: Title V permit condition numbers alone are not the underlying applicable requirements*). If an emission limit is calculated based on the type of source and design capacity or if a standard is based on a design parameter, this information should also be included. NA
X Permit Shield
For all applicable requirements listed above, provide monitoring/testing/recordkeeping/reporting which shall be used to demonstrate compliance. If the method is based on a permit or rule, include the condition number or citation. (Note: Each requirement listed above must have an associated method of demonstrating compliance. If there is not already a required method in place, then a method must be proposed.) NA
Are you in compliance with all applicable requirements for this emission unit? X Yes ___No If no, complete the **Schedule of Compliance Form** as **ATTACHMENT F**.

ATTACHMENT E - Emission Unit Form

Emission Unit Description

Emission unit ID number:	**Emission unit name:**	**List any control devices associated with this emission unit:**
C3T-F-4620	CP-3 Condensed Dowtherm Receiver	NA

Provide a description of the emission unit (type, method of operation, design parameters, etc.):
CP-3 Condensed Dowtherm Receiver

Manufacturer:	**Model number:**	**Serial number:**
NA	NA	NA
Construction date:	**Installation date:**	**Modification date(s):**
NA	1994	NA

Design Capacity (examples: furnaces - tons/hr, tanks - gallons):
116 gallons

Maximum Hourly Throughput:	**Maximum Annual Throughput:**	**Maximum Operating Schedule:**
310 lb/hr	1,359 tpy	8,760 hr/yr

Fuel Usage Data **(fill out all applicable fields)**

Does this emission unit combust fuel? ___ Yes X No	**If yes, is it?** ___ Indirect Fired ___Direct Fired
Maximum design heat input and/or maximum horsepower rating: NA	**Type and Btu/hr rating of burners:** NA

List the primary fuel type(s) and if applicable, the secondary fuel type(s). For each fuel type listed, provide the maximum hourly and annual fuel usage for each.
NA

Describe each fuel expected to be used during the term of the permit.

Fuel Type	Max. Sulfur Content	Max. Ash Content	BTU Value
NA	NA	NA	NA

Emissions Data		
Criteria Pollutants	Potential Emissions	
	PPH	TPY
Carbon Monoxide (CO)	NA	NA
Nitrogen Oxides (NO_X)	NA	NA
Lead (Pb)	NA	NA
Particulate Matter ($PM_{2.5}$)	NA	NA
Particulate Matter (PM_{10})	NA	NA
Total Particulate Matter (TSP)	NA	NA
Sulfur Dioxide (SO_2)	NA	NA
Volatile Organic Compounds (VOC)	0.002	<0.001
Hazardous Air Pollutants	Potential Emissions	
	PPH	TPY
NA	NA	NA
Regulated Pollutants other than Criteria and HAP	Potential Emissions	
	PPH	TPY
NA	NA	NA

List the method(s) used to calculate the potential emissions (include dates of any stack tests conducted, versions of software used, source and dates of emission factors, etc.).

Engineering Estimate

Applicable Requirements
List all applicable requirements for this emission unit. For each applicable requirement, include the underlying rule/regulation citation and/or construction permit with the condition number. (*Note: Title V permit condition numbers alone are not the underlying applicable requirements*). If an emission limit is calculated based on the type of source and design capacity or if a standard is based on a design parameter, this information should also be included. NA
X Permit Shield
For all applicable requirements listed above, provide monitoring/testing/recordkeeping/reporting which shall be used to demonstrate compliance. If the method is based on a permit or rule, include the condition number or citation. (Note: Each requirement listed above must have an associated method of demonstrating compliance. If there is not already a required method in place, then a method must be proposed.) NA
Are you in compliance with all applicable requirements for this emission unit? X Yes ___No If no, complete the **Schedule of Compliance Form** as **ATTACHMENT F**.

ATTACHMENT E - Emission Unit Form

Emission Unit Description

Emission unit ID number:	**Emission unit name:**	**List any control devices associated with this emission unit:**
C3L-F-3190	CP-3 DEG Charge Tank	NA

Provide a description of the emission unit (type, method of operation, design parameters, etc.):
CP-3 DEG Charge Tank

Manufacturer:	**Model number:**	**Serial number:**
NA	NA	NA
Construction date:	**Installation date:**	**Modification date(s):**
NA	1994	NA

Design Capacity (examples: furnaces - tons/hr, tanks - gallons):
275 gallons

Maximum Hourly Throughput:	**Maximum Annual Throughput:**	**Maximum Operating Schedule:**
2,760 gph	24.2 mmgpy	8,760 hr/yr

Fuel Usage Data **(fill out all applicable fields)**

Does this emission unit combust fuel? ___ Yes X No	**If yes, is it?** ___ Indirect Fired ___Direct Fired
Maximum design heat input and/or maximum horsepower rating: NA	**Type and Btu/hr rating of burners:** NA

List the primary fuel type(s) and if applicable, the secondary fuel type(s). For each fuel type listed, provide the maximum hourly and annual fuel usage for each.
NA

Describe each fuel expected to be used during the term of the permit.

Fuel Type	Max. Sulfur Content	Max. Ash Content	BTU Value
NA	NA	NA	NA

Emissions Data		
Criteria Pollutants	Potential Emissions	
	PPH	TPY
Carbon Monoxide (CO)	NA	NA
Nitrogen Oxides (NO_X)	NA	NA
Lead (Pb)	NA	NA
Particulate Matter ($PM_{2.5}$)	NA	NA
Particulate Matter (PM_{10})	NA	NA
Total Particulate Matter (TSP)	NA	NA
Sulfur Dioxide (SO_2)	NA	NA
Volatile Organic Compounds (VOC)	<0.001	<0.001
Hazardous Air Pollutants	Potential Emissions	
	PPH	TPY
NA	NA	NA
Regulated Pollutants other than Criteria and HAP	Potential Emissions	
	PPH	TPY
NA	NA	NA

List the method(s) used to calculate the potential emissions (include dates of any stack tests conducted, versions of software used, source and dates of emission factors, etc.).

Engineering Estimate

Applicable Requirements

List all applicable requirements for this emission unit. For each applicable requirement, include the underlying rule/regulation citation and/or construction permit with the condition number. (*Note: Title V permit condition numbers alone are not the underlying applicable requirements*). If an emission limit is calculated based on the type of source and design capacity or if a standard is based on a design parameter, this information should also be included.

40CFR §63.1316(b)(2)(i); 40CFR §63.1316(b)(2)(i)(A); R13-1650K §4.1.15:

- Organic HAP emissions from all continuous process vents associated with esterification vessels ≤ 0.04 kg organic HAP per Mg of product.

X Permit Shield

For all applicable requirements listed above, provide monitoring/testing/recordkeeping/reporting which shall be used to demonstrate compliance. If the method is based on a permit or rule, include the condition number or citation. (Note: Each requirement listed above must have an associated method of demonstrating compliance. If there is not already a required method in place, then a method must be proposed.)

Monitoring:

- Control device comply with applicable provisions of 40CFR §63.114.

Are you in compliance with all applicable requirements for this emission unit? X Yes ___No

If no, complete the **Schedule of Compliance Form** as **ATTACHMENT F**.

ATTACHMENT E - Emission Unit Form

Emission Unit Description

Emission unit ID number:	**Emission unit name:**	**List any control devices associated with this emission unit:**
UTG-F-3010	CP-3 EG Storage Tank	NA

Provide a description of the emission unit (type, method of operation, design parameters, etc.):
CP-3 EG Storage Tank

Manufacturer:	**Model number:**	**Serial number:**
NA	NA	NA
Construction date:	**Installation date:**	**Modification date(s):**
NA	1966	NA

Design Capacity (examples: furnaces - tons/hr, tanks - gallons):
675,000 gallons

Maximum Hourly Throughput:	**Maximum Annual Throughput:**	**Maximum Operating Schedule:**
21,000 gph	20.8 mmgal/yr	8,760 hr/yr

Fuel Usage Data **(fill out all applicable fields)**

Does this emission unit combust fuel? ___ Yes X No	**If yes, is it?** ___ Indirect Fired ___Direct Fired
Maximum design heat input and/or maximum horsepower rating: NA	**Type and Btu/hr rating of burners:** NA

List the primary fuel type(s) and if applicable, the secondary fuel type(s). For each fuel type listed, provide the maximum hourly and annual fuel usage for each.
NA

Describe each fuel expected to be used during the term of the permit.

Fuel Type	Max. Sulfur Content	Max. Ash Content	BTU Value
NA	NA	NA	NA

Emissions Data		
Criteria Pollutants	Potential Emissions	
	PPH	TPY
Carbon Monoxide (CO)	NA	NA
Nitrogen Oxides (NO_X)	NA	NA
Lead (Pb)	NA	NA
Particulate Matter ($PM_{2.5}$)	NA	NA
Particulate Matter (PM_{10})	NA	NA
Total Particulate Matter (TSP)	NA	NA
Sulfur Dioxide (SO_2)	NA	NA
Volatile Organic Compounds (VOC)	0.02	0.09
Hazardous Air Pollutants	Potential Emissions	
	PPH	TPY
Ethylene Glycol	0.02	0.09
Regulated Pollutants other than Criteria and HAP	Potential Emissions	
	PPH	TPY
NA	NA	NA

List the method(s) used to calculate the potential emissions (include dates of any stack tests conducted, versions of software used, source and dates of emission factors, etc.).

Engineering Estimate

Applicable Requirements
List all applicable requirements for this emission unit. For each applicable requirement, include the underlying rule/regulation citation and/or construction permit with the condition number. (*Note: Title V permit condition numbers alone are not the underlying applicable requirements*). If an emission limit is calculated based on the type of source and design capacity or if a standard is based on a design parameter, this information should also be included. NA
X Permit Shield
For all applicable requirements listed above, provide monitoring/testing/recordkeeping/reporting which shall be used to demonstrate compliance. If the method is based on a permit or rule, include the condition number or citation. (Note: Each requirement listed above must have an associated method of demonstrating compliance. If there is not already a required method in place, then a method must be proposed.) NA
Are you in compliance with all applicable requirements for this emission unit? X Yes ___No If no, complete the **Schedule of Compliance Form** as **ATTACHMENT F**.

ATTACHMENT E - Emission Unit Form

Emission Unit Description

Emission unit ID number:	**Emission unit name:**	**List any control devices associated with this emission unit:**
UTG-F-3020	CP-3 EG Storage Tank	NA

Provide a description of the emission unit (type, method of operation, design parameters, etc.):
CP-3 EG Storage Tank

Manufacturer:	**Model number:**	**Serial number:**
NA	NA	NA
Construction date:	**Installation date:**	**Modification date(s):**
NA	1966	NA

Design Capacity (examples: furnaces - tons/hr, tanks - gallons):
675,000 gallons

Maximum Hourly Throughput:	**Maximum Annual Throughput:**	**Maximum Operating Schedule:**
21,000 gph	20.8 mmgal/yr	8,760 hr/yr

Fuel Usage Data **(fill out all applicable fields)**

Does this emission unit combust fuel? ___ Yes X No	**If yes, is it?** ___ Indirect Fired ___Direct Fired
Maximum design heat input and/or maximum horsepower rating: NA	**Type and Btu/hr rating of burners:** NA

List the primary fuel type(s) and if applicable, the secondary fuel type(s). For each fuel type listed, provide the maximum hourly and annual fuel usage for each.
NA

Describe each fuel expected to be used during the term of the permit.

Fuel Type	Max. Sulfur Content	Max. Ash Content	BTU Value
NA	NA	NA	NA

Emissions Data		
Criteria Pollutants	Potential Emissions	
	PPH	TPY
Carbon Monoxide (CO)	NA	NA
Nitrogen Oxides (NO_X)	NA	NA
Lead (Pb)	NA	NA
Particulate Matter ($PM_{2.5}$)	NA	NA
Particulate Matter (PM_{10})	NA	NA
Total Particulate Matter (TSP)	NA	NA
Sulfur Dioxide (SO_2)	NA	NA
Volatile Organic Compounds (VOC)	0.02	0.09
Hazardous Air Pollutants	Potential Emissions	
	PPH	TPY
Ethylene Glycol	0.02	0.09
Regulated Pollutants other than Criteria and HAP	Potential Emissions	
	PPH	TPY
NA	NA	NA

List the method(s) used to calculate the potential emissions (include dates of any stack tests conducted, versions of software used, source and dates of emission factors, etc.).

Engineering Estimate

Applicable Requirements
List all applicable requirements for this emission unit. For each applicable requirement, include the underlying rule/regulation citation and/or construction permit with the condition number. (*Note: Title V permit condition numbers alone are not the underlying applicable requirements*). If an emission limit is calculated based on the type of source and design capacity or if a standard is based on a design parameter, this information should also be included. NA
X Permit Shield
For all applicable requirements listed above, provide monitoring/testing/recordkeeping/reporting which shall be used to demonstrate compliance. If the method is based on a permit or rule, include the condition number or citation. (Note: Each requirement listed above must have an associated method of demonstrating compliance. If there is not already a required method in place, then a method must be proposed.) NA
Are you in compliance with all applicable requirements for this emission unit? X Yes ___No If no, complete the **Schedule of Compliance Form** as **ATTACHMENT F**.

ATTACHMENT E - Emission Unit Form

Emission Unit Description

Emission unit ID number:	**Emission unit name:**	**List any control devices associated with this emission unit:**
C3T-F-1700	CP-3 Hot Oil Heater	NA

Provide a description of the emission unit (type, method of operation, design parameters, etc.):
CP-3 Hot Oil Heater

Manufacturer:	**Model number:**	**Serial number:**
NA	NA	NA
Construction date:	**Installation date:**	**Modification date(s):**
NA	2007	NA

Design Capacity (examples: furnaces - tons/hr, tanks - gallons):
23.0 mmBtu/hr

Maximum Hourly Throughput:	**Maximum Annual Throughput:**	**Maximum Operating Schedule:**
23,960 scf/hr	210 mmscf/yr	8,760 hr/yr

Fuel Usage Data **(fill out all applicable fields)**

Does this emission unit combust fuel? X Yes ___ No	**If yes, is it?** X Indirect Fired ___Direct Fired
Maximum design heat input and/or maximum horsepower rating: 23.0 mmBtu/hr	**Type and Btu/hr rating of burners:** 23.0 mmBtu/hr

List the primary fuel type(s) and if applicable, the secondary fuel type(s). For each fuel type listed, provide the maximum hourly and annual fuel usage for each.
Natural Gas – 23,960 scf/hr; 210 mmscf/yr

Describe each fuel expected to be used during the term of the permit.

Fuel Type	Max. Sulfur Content	Max. Ash Content	BTU Value
Natural	0.01 wt%	NA	960 Btu/scf

Emissions Data		
Criteria Pollutants	Potential Emissions	
	PPH	TPY
Carbon Monoxide (CO)	1.89	8.26
Nitrogen Oxides (NO_X)	2.25	9.87
Lead (Pb)	NA	NA
Particulate Matter ($PM_{2.5}$)	NA	NA
Particulate Matter (PM_{10})	0.17	0.76
Total Particulate Matter (TSP)	0.17	0.76
Sulfur Dioxide (SO_2)	0.01	0.06
Volatile Organic Compounds (VOC)	0.12	0.50
Hazardous Air Pollutants	Potential Emissions	
	PPH	TPY
NA	NA	NA
NA	NA	NA
Regulated Pollutants other than Criteria and HAP	Potential Emissions	
	PPH	TPY
NA	NA	NA

List the method(s) used to calculate the potential emissions (include dates of any stack tests conducted, versions of software used, source and dates of emission factors, etc.).

Engineering Estimate

Applicable Requirements

List all applicable requirements for this emission unit. For each applicable requirement, include the underlying rule/regulation citation and/or construction permit with the condition number. (*Note: Title V permit condition numbers alone are not the underlying applicable requirements*). If an emission limit is calculated based on the type of source and design capacity or if a standard is based on a design parameter, this information should also be included.

R13-1650K & 45CSR2 §3.1:

- Visible emissions ≤ 10%.

R13-1650K:

- Limited to maximum designed heat input rate.
- CO limited to 400 ppm by volume.
- Develop Startup, Shutdown, Malfunction Plan (SSMP).
- Develop site-specific testing plan.

X Permit Shield

For all applicable requirements listed above, provide monitoring/testing/recordkeeping/reporting which shall be used to demonstrate compliance. If the method is based on a permit or rule, include the condition number or citation. (Note: Each requirement listed above must have an associated method of demonstrating compliance. If there is not already a required method in place, then a method must be proposed.)

Monitoring:

- Hourly and annual fuel consumption rate.

Testing:

- Conduct performance testing.

Recordkeeping:

- Maintain monthly records of fuel consumption.

Are you in compliance with all applicable requirements for this emission unit? X Yes ___No

If no, complete the **Schedule of Compliance Form** as **ATTACHMENT F**.

ATTACHMENT E - Emission Unit Form

Emission Unit Description

Emission unit ID number:	**Emission unit name:**	**List any control devices associated with this emission unit:**
C3T-F-7260	CP-3 Hot Oil Storage Tank	NA

Provide a description of the emission unit (type, method of operation, design parameters, etc.):
CP-3 Hot Oil Storage Tank

Manufacturer:	**Model number:**	**Serial number:**
NA	NA	NA
Construction date:	**Installation date:**	**Modification date(s):**
NA	1994	NA

Design Capacity (examples: furnaces - tons/hr, tanks - gallons):
17,700 gallons

Maximum Hourly Throughput:	**Maximum Annual Throughput:**	**Maximum Operating Schedule:**
17,160 gph	150 mmgpy	8,760 hr/yr

Fuel Usage Data **(fill out all applicable fields)**

Does this emission unit combust fuel? ___ Yes X No	**If yes, is it?** ___ Indirect Fired ___Direct Fired
Maximum design heat input and/or maximum horsepower rating: NA	**Type and Btu/hr rating of burners:** NA

List the primary fuel type(s) and if applicable, the secondary fuel type(s). For each fuel type listed, provide the maximum hourly and annual fuel usage for each.
NA

Describe each fuel expected to be used during the term of the permit.

Fuel Type	Max. Sulfur Content	Max. Ash Content	BTU Value
NA	NA	NA	NA

Emissions Data		
Criteria Pollutants	Potential Emissions	
	PPH	TPY
Carbon Monoxide (CO)	NA	NA
Nitrogen Oxides (NO_X)	NA	NA
Lead (Pb)	NA	NA
Particulate Matter ($PM_{2.5}$)	NA	NA
Particulate Matter (PM_{10})	NA	NA
Total Particulate Matter (TSP)	NA	NA
Sulfur Dioxide (SO_2)	NA	NA
Volatile Organic Compounds (VOC)	0.003	<0.001
Hazardous Air Pollutants	Potential Emissions	
	PPH	TPY
NA	NA	NA
Regulated Pollutants other than Criteria and HAP	Potential Emissions	
	PPH	TPY
NA	NA	NA

List the method(s) used to calculate the potential emissions (include dates of any stack tests conducted, versions of software used, source and dates of emission factors, etc.).

Engineering Estimate

Applicable Requirements
List all applicable requirements for this emission unit. For each applicable requirement, include the underlying rule/regulation citation and/or construction permit with the condition number. (*Note: Title V permit condition numbers alone are not the underlying applicable requirements*). If an emission limit is calculated based on the type of source and design capacity or if a standard is based on a design parameter, this information should also be included. NA
X Permit Shield
For all applicable requirements listed above, provide monitoring/testing/recordkeeping/reporting which shall be used to demonstrate compliance. If the method is based on a permit or rule, include the condition number or citation. (Note: Each requirement listed above must have an associated method of demonstrating compliance. If there is not already a required method in place, then a method must be proposed.) NA
Are you in compliance with all applicable requirements for this emission unit? X Yes ___No If no, complete the **Schedule of Compliance Form** as **ATTACHMENT F**.

ATTACHMENT E - Emission Unit Form

Emission Unit Description

Emission unit ID number:	**Emission unit name:**	**List any control devices associated with this emission unit:**
L4A-F-0200	CP-3 Off Spec Silo	L4A-M-0200

Provide a description of the emission unit (type, method of operation, design parameters, etc.):
CP-3 Off Spec Silo

Manufacturer:	**Model number:**	**Serial number:**
NA	NA	NA
Construction date:	**Installation date:**	**Modification date(s):**
NA	1994	NA

Design Capacity (examples: furnaces - tons/hr, tanks - gallons):
8’ x 32’ s/s

Maximum Hourly Throughput:	**Maximum Annual Throughput:**	**Maximum Operating Schedule:**
148,620 lb/hr	43,299 tpy	8,760 hr/yr

Fuel Usage Data **(fill out all applicable fields)**

Does this emission unit combust fuel? ___ Yes X No	**If yes, is it?** ___ Indirect Fired ___Direct Fired
Maximum design heat input and/or maximum horsepower rating: NA	**Type and Btu/hr rating of burners:** NA

List the primary fuel type(s) and if applicable, the secondary fuel type(s). For each fuel type listed, provide the maximum hourly and annual fuel usage for each.
NA

Describe each fuel expected to be used during the term of the permit.

Fuel Type	Max. Sulfur Content	Max. Ash Content	BTU Value
NA	NA	NA	NA

Emissions Data		
Criteria Pollutants	Potential Emissions	
	PPH	TPY
Carbon Monoxide (CO)	NA	NA
Nitrogen Oxides (NO_X)	NA	NA
Lead (Pb)	NA	NA
Particulate Matter ($PM_{2.5}$)	NA	NA
Particulate Matter (PM_{10})	NA	NA
Total Particulate Matter (TSP)	NA	NA
Sulfur Dioxide (SO_2)	NA	NA
Volatile Organic Compounds (VOC)	0.35	0.01
Hazardous Air Pollutants	Potential Emissions	
	PPH	TPY
NA	NA	NA
Regulated Pollutants other than Criteria and HAP	Potential Emissions	
	PPH	TPY
NA	NA	NA

List the method(s) used to calculate the potential emissions (include dates of any stack tests conducted, versions of software used, source and dates of emission factors, etc.).

Engineering Estimate

Applicable Requirements
List all applicable requirements for this emission unit. For each applicable requirement, include the underlying rule/regulation citation and/or <u>construction permit</u> with the condition number. (*Note: Title V permit condition numbers alone are not the underlying applicable requirements*). If an emission limit is calculated based on the type of source and design capacity or if a standard is based on a design parameter, this information should also be included. **R13-1650K §4.1.13; 45CSR §7-3.7:** • Storage structure required to have full enclosure and equipped with PM control devices.
<u>X</u> Permit Shield
For all applicable requirements listed above, provide monitoring/testing/recordkeeping/reporting which shall be used to demonstrate compliance. If the method is based on a permit or rule, include the condition number or citation. (Note: Each requirement listed above must have an associated method of demonstrating compliance. If there is not already a required method in place, then a method must be proposed.) NA
Are you in compliance with all applicable requirements for this emission unit? <u>X</u> Yes ___No If no, complete the **Schedule of Compliance Form** as **ATTACHMENT F**.

ATTACHMENT E - Emission Unit Form

Emission Unit Description

Emission unit ID number:	**Emission unit name:**	**List any control devices associated with this emission unit:**
C38-E-1210	CP-3 Pellet Dryer	NA

Provide a description of the emission unit (type, method of operation, design parameters, etc.):
CP-3 Pellet Dryer

Manufacturer:	**Model number:**	**Serial number:**
NA	NA	NA
Construction date:	**Installation date:**	**Modification date(s):**
NA	1994	NA

Design Capacity (examples: furnaces - tons/hr, tanks - gallons):
29,600 lb/hr

Maximum Hourly Throughput:	**Maximum Annual Throughput:**	**Maximum Operating Schedule:**
29,600 lb/hr	129,648 tpy	8,760 hr/yr

Fuel Usage Data **(fill out all applicable fields)**

Does this emission unit combust fuel? ___ Yes X No	**If yes, is it?** ___ Indirect Fired ___Direct Fired
Maximum design heat input and/or maximum horsepower rating: NA	**Type and Btu/hr rating of burners:** NA

List the primary fuel type(s) and if applicable, the secondary fuel type(s). For each fuel type listed, provide the maximum hourly and annual fuel usage for each.
NA

Describe each fuel expected to be used during the term of the permit.

Fuel Type	Max. Sulfur Content	Max. Ash Content	BTU Value
NA	NA	NA	NA

Emissions Data		
Criteria Pollutants	Potential Emissions	
	PPH	TPY
Carbon Monoxide (CO)	NA	NA
Nitrogen Oxides (NO_X)	NA	NA
Lead (Pb)	NA	NA
Particulate Matter ($PM_{2.5}$)	NA	NA
Particulate Matter (PM_{10})	NA	NA
Total Particulate Matter (TSP)	NA	NA
Sulfur Dioxide (SO_2)	NA	NA
Volatile Organic Compounds (VOC)	0.37	1.48
Hazardous Air Pollutants	Potential Emissions	
	PPH	TPY
Ethylene Glycol	0.19	0.77
Acetaldehyde	0.06	0.22
Regulated Pollutants other than Criteria and HAP	Potential Emissions	
	PPH	TPY
NA	NA	NA

List the method(s) used to calculate the potential emissions (include dates of any stack tests conducted, versions of software used, source and dates of emission factors, etc.).

Engineering Estimate

Applicable Requirements
List all applicable requirements for this emission unit. For each applicable requirement, include the underlying rule/regulation citation and/or construction permit with the condition number. (*Note: Title V permit condition numbers alone are not the underlying applicable requirements*). If an emission limit is calculated based on the type of source and design capacity or if a standard is based on a design parameter, this information should also be included. NA
X Permit Shield
For all applicable requirements listed above, provide monitoring/testing/recordkeeping/reporting which shall be used to demonstrate compliance. If the method is based on a permit or rule, include the condition number or citation. (Note: Each requirement listed above must have an associated method of demonstrating compliance. If there is not already a required method in place, then a method must be proposed.) NA
Are you in compliance with all applicable requirements for this emission unit? X Yes ___No If no, complete the **Schedule of Compliance Form** as **ATTACHMENT F**.

ATTACHMENT E - Emission Unit Form

Emission Unit Description

Emission unit ID number:	**Emission unit name:**	**List any control devices associated with this emission unit:**
C38-E-3210	CP-3 Pellet Dryer	NA

Provide a description of the emission unit (type, method of operation, design parameters, etc.):
CP-3 Pellet Dryer

Manufacturer:	**Model number:**	**Serial number:**
NA	NA	NA
Construction date:	**Installation date:**	**Modification date(s):**
NA	1994	NA

Design Capacity (examples: furnaces - tons/hr, tanks - gallons):
29,600 lb/hr

Maximum Hourly Throughput:	**Maximum Annual Throughput:**	**Maximum Operating Schedule:**
29,600 lb/hr	129,648 tpy	8,760 hr/yr

Fuel Usage Data **(fill out all applicable fields)**

Does this emission unit combust fuel? ___ Yes X No	**If yes, is it?** ___ Indirect Fired ___Direct Fired
Maximum design heat input and/or maximum horsepower rating: NA	**Type and Btu/hr rating of burners:** NA

List the primary fuel type(s) and if applicable, the secondary fuel type(s). For each fuel type listed, provide the maximum hourly and annual fuel usage for each.
NA

Describe each fuel expected to be used during the term of the permit.

Fuel Type	Max. Sulfur Content	Max. Ash Content	BTU Value
NA	NA	NA	NA

Emissions Data		
Criteria Pollutants	Potential Emissions	
	PPH	TPY
Carbon Monoxide (CO)	NA	NA
Nitrogen Oxides (NO_X)	NA	NA
Lead (Pb)	NA	NA
Particulate Matter ($PM_{2.5}$)	NA	NA
Particulate Matter (PM_{10})	NA	NA
Total Particulate Matter (TSP)	NA	NA
Sulfur Dioxide (SO_2)	NA	NA
Volatile Organic Compounds (VOC)	0.37	1.48
Hazardous Air Pollutants	Potential Emissions	
	PPH	TPY
Ethylene Glycol	0.19	0.77
Acetaldehyde	0.06	0.22
Regulated Pollutants other than Criteria and HAP	Potential Emissions	
	PPH	TPY
NA	NA	NA

List the method(s) used to calculate the potential emissions (include dates of any stack tests conducted, versions of software used, source and dates of emission factors, etc.).

Engineering Estimate

Applicable Requirements
List all applicable requirements for this emission unit. For each applicable requirement, include the underlying rule/regulation citation and/or construction permit with the condition number. (*Note: Title V permit condition numbers alone are not the underlying applicable requirements*). If an emission limit is calculated based on the type of source and design capacity or if a standard is based on a design parameter, this information should also be included. NA
X Permit Shield
For all applicable requirements listed above, provide monitoring/testing/recordkeeping/reporting which shall be used to demonstrate compliance. If the method is based on a permit or rule, include the condition number or citation. (Note: Each requirement listed above must have an associated method of demonstrating compliance. If there is not already a required method in place, then a method must be proposed.) NA
Are you in compliance with all applicable requirements for this emission unit? X Yes ___No If no, complete the **Schedule of Compliance Form** as **ATTACHMENT F**.

ATTACHMENT E - Emission Unit Form

Emission Unit Description

Emission unit ID number:	**Emission unit name:**	**List any control devices associated with this emission unit:**
C38-E-5210	CP-3 Pellet Dryer	NA

Provide a description of the emission unit (type, method of operation, design parameters, etc.):
CP-3 Pellet Dryer

Manufacturer:	**Model number:**	**Serial number:**
NA	NA	NA
Construction date:	**Installation date:**	**Modification date(s):**
NA	1994	NA

Design Capacity (examples: furnaces - tons/hr, tanks - gallons):
29,600 lb/hr

Maximum Hourly Throughput:	**Maximum Annual Throughput:**	**Maximum Operating Schedule:**
29,600 lb/hr	129,648 tpy	8,760 hr/yr

Fuel Usage Data **(fill out all applicable fields)**

Does this emission unit combust fuel? ___ Yes X No	**If yes, is it?** ___ Indirect Fired ___Direct Fired
Maximum design heat input and/or maximum horsepower rating: NA	**Type and Btu/hr rating of burners:** NA

List the primary fuel type(s) and if applicable, the secondary fuel type(s). For each fuel type listed, provide the maximum hourly and annual fuel usage for each.
NA

Describe each fuel expected to be used during the term of the permit.

Fuel Type	Max. Sulfur Content	Max. Ash Content	BTU Value
NA	NA	NA	NA

Emissions Data		
Criteria Pollutants	Potential Emissions	
	PPH	TPY
Carbon Monoxide (CO)	NA	NA
Nitrogen Oxides (NO_X)	NA	NA
Lead (Pb)	NA	NA
Particulate Matter ($PM_{2.5}$)	NA	NA
Particulate Matter (PM_{10})	NA	NA
Total Particulate Matter (TSP)	NA	NA
Sulfur Dioxide (SO_2)	NA	NA
Volatile Organic Compounds (VOC)	0.37	1.48
Hazardous Air Pollutants	Potential Emissions	
	PPH	TPY
Ethylene Glycol	0.19	0.77
Acetaldehyde	0.06	0.22
Regulated Pollutants other than Criteria and HAP	Potential Emissions	
	PPH	TPY
NA	NA	NA

List the method(s) used to calculate the potential emissions (include dates of any stack tests conducted, versions of software used, source and dates of emission factors, etc.).

Engineering Estimate

Applicable Requirements
List all applicable requirements for this emission unit. For each applicable requirement, include the underlying rule/regulation citation and/or construction permit with the condition number. (*Note: Title V permit condition numbers alone are not the underlying applicable requirements*). If an emission limit is calculated based on the type of source and design capacity or if a standard is based on a design parameter, this information should also be included. NA
X Permit Shield
For all applicable requirements listed above, provide monitoring/testing/recordkeeping/reporting which shall be used to demonstrate compliance. If the method is based on a permit or rule, include the condition number or citation. (Note: Each requirement listed above must have an associated method of demonstrating compliance. If there is not already a required method in place, then a method must be proposed.) NA
Are you in compliance with all applicable requirements for this emission unit? X Yes ___No If no, complete the **Schedule of Compliance Form** as **ATTACHMENT F**.

ATTACHMENT E - Emission Unit Form

Emission Unit Description

Emission unit ID number:	**Emission unit name:**	**List any control devices associated with this emission unit:**
C38-E-7210	CP-3 Pellet Dryer	NA

Provide a description of the emission unit (type, method of operation, design parameters, etc.):
CP-3 Pellet Dryer

Manufacturer:	**Model number:**	**Serial number:**
NA	NA	NA
Construction date:	**Installation date:**	**Modification date(s):**
NA	2007	NA

Design Capacity (examples: furnaces - tons/hr, tanks - gallons):
29,600 lb/hr

Maximum Hourly Throughput:	**Maximum Annual Throughput:**	**Maximum Operating Schedule:**
29,600 lb/hr	129,648 tpy	8,760 hr/yr

Fuel Usage Data **(fill out all applicable fields)**

Does this emission unit combust fuel? ___ Yes X No	**If yes, is it?** ___ Indirect Fired ___Direct Fired
Maximum design heat input and/or maximum horsepower rating: NA	**Type and Btu/hr rating of burners:** NA

List the primary fuel type(s) and if applicable, the secondary fuel type(s). For each fuel type listed, provide the maximum hourly and annual fuel usage for each.
NA

Describe each fuel expected to be used during the term of the permit.

Fuel Type	Max. Sulfur Content	Max. Ash Content	BTU Value
NA	NA	NA	NA

Emissions Data		
Criteria Pollutants	Potential Emissions	
	PPH	TPY
Carbon Monoxide (CO)	NA	NA
Nitrogen Oxides (NO_X)	NA	NA
Lead (Pb)	NA	NA
Particulate Matter ($PM_{2.5}$)	NA	NA
Particulate Matter (PM_{10})	NA	NA
Total Particulate Matter (TSP)	NA	NA
Sulfur Dioxide (SO_2)	NA	NA
Volatile Organic Compounds (VOC)	0.37	1.48
Hazardous Air Pollutants	Potential Emissions	
	PPH	TPY
Ethylene Glycol	0.19	0.77
Acetaldehyde	0.06	0.22
Regulated Pollutants other than Criteria and HAP	Potential Emissions	
	PPH	TPY
NA	NA	NA

List the method(s) used to calculate the potential emissions (include dates of any stack tests conducted, versions of software used, source and dates of emission factors, etc.).

Engineering Estimate

Applicable Requirements
List all applicable requirements for this emission unit. For each applicable requirement, include the underlying rule/regulation citation and/or construction permit with the condition number. (*Note: Title V permit condition numbers alone are not the underlying applicable requirements*). If an emission limit is calculated based on the type of source and design capacity or if a standard is based on a design parameter, this information should also be included. NA
X Permit Shield
For all applicable requirements listed above, provide monitoring/testing/recordkeeping/reporting which shall be used to demonstrate compliance. If the method is based on a permit or rule, include the condition number or citation. (Note: Each requirement listed above must have an associated method of demonstrating compliance. If there is not already a required method in place, then a method must be proposed.) NA
Are you in compliance with all applicable requirements for this emission unit? X Yes ___No If no, complete the **Schedule of Compliance Form** as **ATTACHMENT F**.

ATTACHMENT E - Emission Unit Form

Emission Unit Description

Emission unit ID number:	**Emission unit name:**	**List any control devices associated with this emission unit:**
C31-F-1220	CP-3 R/1 & R/2 Condensate Tank	C3T-B-1600

Provide a description of the emission unit (type, method of operation, design parameters, etc.):
CP-3 R/1 & R/2 Condensate Tank

Manufacturer:	**Model number:**	**Serial number:**
NA	NA	NA
Construction date:	**Installation date:**	**Modification date(s):**
NA	1994	NA

Design Capacity (examples: furnaces - tons/hr, tanks - gallons):
15,300 lb/hr

Maximum Hourly Throughput:	**Maximum Annual Throughput:**	**Maximum Operating Schedule:**
15,300 lb/hr	67,014 tpy	8,760 hr/yr

Fuel Usage Data **(fill out all applicable fields)**

Does this emission unit combust fuel? ___ Yes X No	**If yes, is it?** ___ Indirect Fired ___Direct Fired
Maximum design heat input and/or maximum horsepower rating: NA	**Type and Btu/hr rating of burners:** NA

List the primary fuel type(s) and if applicable, the secondary fuel type(s). For each fuel type listed, provide the maximum hourly and annual fuel usage for each.
NA

Describe each fuel expected to be used during the term of the permit.

Fuel Type	Max. Sulfur Content	Max. Ash Content	BTU Value
NA	NA	NA	NA

Emissions Data		
Criteria Pollutants	Potential Emissions	
	PPH	TPY
Carbon Monoxide (CO)	See emissions from Hot Oil Heater C3T-B-1600.	
Nitrogen Oxides (NO_X)		
Lead (Pb)		
Particulate Matter ($PM_{2.5}$)		
Particulate Matter (PM_{10})		
Total Particulate Matter (TSP)		
Sulfur Dioxide (SO_2)		
Volatile Organic Compounds (VOC)		
Hazardous Air Pollutants	Potential Emissions	
	PPH	TPY
See emissions from Hot Oil Heater C3T-B-1600.		
Regulated Pollutants other than Criteria and HAP	Potential Emissions	
	PPH	TPY
NA	NA	NA

List the method(s) used to calculate the potential emissions (include dates of any stack tests conducted, versions of software used, source and dates of emission factors, etc.).

Engineering Estimate

Applicable Requirements

List all applicable requirements for this emission unit. For each applicable requirement, include the underlying rule/regulation citation and/or construction permit with the condition number. (*Note: Title V permit condition numbers alone are not the underlying applicable requirements*). If an emission limit is calculated based on the type of source and design capacity or if a standard is based on a design parameter, this information should also be included.

40CFR §63.1316(b)(2)(i); 40CFR §63.1316(b)(2)(i)(A); R13-1650K §4.1.15:

- Organic HAP emissions from all continuous process vents associated with esterification vessels ≤ 0.04 kg organic HAP per Mg of product.

X Permit Shield

For all applicable requirements listed above, provide monitoring/testing/recordkeeping/reporting which shall be used to demonstrate compliance. If the method is based on a permit or rule, include the condition number or citation. (Note: Each requirement listed above must have an associated method of demonstrating compliance. If there is not already a required method in place, then a method must be proposed.)

Monitoring:

- Control device comply with applicable provisions of 40CFR §63.114.

Are you in compliance with all applicable requirements for this emission unit? X Yes ___No

If no, complete the **Schedule of Compliance Form** as **ATTACHMENT F**.

ATTACHMENT E - Emission Unit Form

Emission Unit Description

Emission unit ID number:	**Emission unit name:**	**List any control devices associated with this emission unit:**
C3L-F-3140	CP-3 R/1 EG Charge Tank	NA

Provide a description of the emission unit (type, method of operation, design parameters, etc.):
CP-3 R/1 EG Charge Tank

Manufacturer:	**Model number:**	**Serial number:**
NA	NA	NA
Construction date:	**Installation date:**	**Modification date(s):**
NA	1994	NA

Design Capacity (examples: furnaces - tons/hr, tanks - gallons):
1,730 gallons

Maximum Hourly Throughput:	**Maximum Annual Throughput:**	**Maximum Operating Schedule:**
11,160 gph	97.8 mmgal/yr	8,760 hr/yr

Fuel Usage Data **(fill out all applicable fields)**

Does this emission unit combust fuel? ___ Yes X No	**If yes, is it?** ___ Indirect Fired ___Direct Fired
Maximum design heat input and/or maximum horsepower rating: NA	**Type and Btu/hr rating of burners:** NA

List the primary fuel type(s) and if applicable, the secondary fuel type(s). For each fuel type listed, provide the maximum hourly and annual fuel usage for each.
NA

Describe each fuel expected to be used during the term of the permit.

Fuel Type	Max. Sulfur Content	Max. Ash Content	BTU Value
NA	NA	NA	NA

Emissions Data		
Criteria Pollutants	Potential Emissions	
	PPH	TPY
Carbon Monoxide (CO)	NA	NA
Nitrogen Oxides (NO_X)	NA	NA
Lead (Pb)	NA	NA
Particulate Matter ($PM_{2.5}$)	NA	NA
Particulate Matter (PM_{10})	NA	NA
Total Particulate Matter (TSP)	NA	NA
Sulfur Dioxide (SO_2)	NA	NA
Volatile Organic Compounds (VOC)	Emissions included with R/1 Recupic Charge Tank C3L-F-3180.	
Hazardous Air Pollutants	Potential Emissions	
	PPH	TPY
Ethylene Glycol	Emissions included with R/1 Recupic Charge Tank C3L-F-3180.	
Regulated Pollutants other than Criteria and HAP	Potential Emissions	
	PPH	TPY
NA	NA	NA

List the method(s) used to calculate the potential emissions (include dates of any stack tests conducted, versions of software used, source and dates of emission factors, etc.).

Engineering Estimate

Applicable Requirements

List all applicable requirements for this emission unit. For each applicable requirement, include the underlying rule/regulation citation and/or construction permit with the condition number. (*Note: Title V permit condition numbers alone are not the underlying applicable requirements*). If an emission limit is calculated based on the type of source and design capacity or if a standard is based on a design parameter, this information should also be included.

40CFR §63.1316(b)(2)(i); 40CFR §63.1316(b)(2)(i)(A); R13-1650K §4.1.15:

- Organic HAP emissions from all continuous process vents associated with esterification vessels ≤ 0.04 kg organic HAP per Mg of product.

X Permit Shield

For all applicable requirements listed above, provide monitoring/testing/recordkeeping/reporting which shall be used to demonstrate compliance. If the method is based on a permit or rule, include the condition number or citation. (Note: Each requirement listed above must have an associated method of demonstrating compliance. If there is not already a required method in place, then a method must be proposed.)

Monitoring:

- Control device comply with applicable provisions of 40CFR §63.114.

Are you in compliance with all applicable requirements for this emission unit? X Yes ___No

If no, complete the **Schedule of Compliance Form** as **ATTACHMENT F**.

ATTACHMENT E - Emission Unit Form

Emission Unit Description

Emission unit ID number:	**Emission unit name:**	**List any control devices associated with this emission unit:**
C3L-F-3180	CP-3 R/1 Recupic EG Charge Tank	NA

Provide a description of the emission unit (type, method of operation, design parameters, etc.):
CP-3 R/1 Recupic EG Charge Tank

Manufacturer:	**Model number:**	**Serial number:**
NA	NA	NA
Construction date:	**Installation date:**	**Modification date(s):**
NA	1994	NA

Design Capacity (examples: furnaces - tons/hr, tanks - gallons):
1,730 gallons

Maximum Hourly Throughput:	**Maximum Annual Throughput:**	**Maximum Operating Schedule:**
11,160 gph	97.8 mmgal/yr	8,760 hr/yr

Fuel Usage Data **(fill out all applicable fields)**

Does this emission unit combust fuel? ___ Yes X No	**If yes, is it?** ___ Indirect Fired ___Direct Fired
Maximum design heat input and/or maximum horsepower rating: NA	**Type and Btu/hr rating of burners:** NA

List the primary fuel type(s) and if applicable, the secondary fuel type(s). For each fuel type listed, provide the maximum hourly and annual fuel usage for each.
NA

Describe each fuel expected to be used during the term of the permit.

Fuel Type	Max. Sulfur Content	Max. Ash Content	BTU Value
NA	NA	NA	NA

Emissions Data		
Criteria Pollutants	Potential Emissions	
	PPH	TPY
Carbon Monoxide (CO)	NA	NA
Nitrogen Oxides (NO_X)	NA	NA
Lead (Pb)	NA	NA
Particulate Matter ($PM_{2.5}$)	NA	NA
Particulate Matter (PM_{10})	NA	NA
Total Particulate Matter (TSP)	NA	NA
Sulfur Dioxide (SO_2)	NA	NA
Volatile Organic Compounds (VOC)	0.23	0.52
Hazardous Air Pollutants	Potential Emissions	
	PPH	TPY
Ethylene Glycol	0.23	0.52
Regulated Pollutants other than Criteria and HAP	Potential Emissions	
	PPH	TPY
NA	NA	NA

List the method(s) used to calculate the potential emissions (include dates of any stack tests conducted, versions of software used, source and dates of emission factors, etc.).

Engineering Estimate

Applicable Requirements

List all applicable requirements for this emission unit. For each applicable requirement, include the underlying rule/regulation citation and/or construction permit with the condition number. (*Note: Title V permit condition numbers alone are not the underlying applicable requirements*). If an emission limit is calculated based on the type of source and design capacity or if a standard is based on a design parameter, this information should also be included.

40CFR §63.1316(b)(2)(i); 40CFR §63.1316(b)(2)(i)(A); R13-1650K §4.1.15:

- Organic HAP emissions from all continuous process vents associated with polymerization reactor sections ≤ 0.02 kg organic HAP per Mg of product.

X Permit Shield

For all applicable requirements listed above, provide monitoring/testing/recordkeeping/reporting which shall be used to demonstrate compliance. If the method is based on a permit or rule, include the condition number or citation. (Note: Each requirement listed above must have an associated method of demonstrating compliance. If there is not already a required method in place, then a method must be proposed.)

Monitoring:

- Control device comply with applicable provisions of 40CFR §63.114.

Are you in compliance with all applicable requirements for this emission unit? X Yes ___No

If no, complete the **Schedule of Compliance Form** as **ATTACHMENT F**.

ATTACHMENT E - Emission Unit Form

Emission Unit Description

Emission unit ID number:	**Emission unit name:**	**List any control devices associated with this emission unit:**
C31-E-1020	CP-3 R/1 System	C3T-B-1600

Provide a description of the emission unit (type, method of operation, design parameters, etc.):
CP-3 R/1 System

Manufacturer:	**Model number:**	**Serial number:**
NA	NA	NA
Construction date:	**Installation date:**	**Modification date(s):**
NA	1994	NA

Design Capacity (examples: furnaces - tons/hr, tanks - gallons):
2,970 gallons

Maximum Hourly Throughput:	**Maximum Annual Throughput:**	**Maximum Operating Schedule:**
70,000 lb/hr	306,600 tpy	8,760 hr/yr

Fuel Usage Data **(fill out all applicable fields)**

Does this emission unit combust fuel? ___ Yes X No	**If yes, is it?** ___ Indirect Fired ___Direct Fired
Maximum design heat input and/or maximum horsepower rating: NA	**Type and Btu/hr rating of burners:** NA

List the primary fuel type(s) and if applicable, the secondary fuel type(s). For each fuel type listed, provide the maximum hourly and annual fuel usage for each.
NA

Describe each fuel expected to be used during the term of the permit.

Fuel Type	Max. Sulfur Content	Max. Ash Content	BTU Value
NA	NA	NA	NA

Emissions Data		
Criteria Pollutants	Potential Emissions	
	PPH	TPY
Carbon Monoxide (CO)	See emissions from Hot Oil Heater C3T-B-1600.	
Nitrogen Oxides (NO_X)		
Lead (Pb)		
Particulate Matter ($PM_{2.5}$)		
Particulate Matter (PM_{10})		
Total Particulate Matter (TSP)		
Sulfur Dioxide (SO_2)		
Volatile Organic Compounds (VOC)		
Hazardous Air Pollutants	Potential Emissions	
	PPH	TPY
See emissions from Hot Oil Heater C3T-B-1600.		
Regulated Pollutants other than Criteria and HAP	Potential Emissions	
	PPH	TPY
NA	NA	NA

List the method(s) used to calculate the potential emissions (include dates of any stack tests conducted, versions of software used, source and dates of emission factors, etc.).

Engineering Estimate

Applicable Requirements

List all applicable requirements for this emission unit. For each applicable requirement, include the underlying rule/regulation citation and/or construction permit with the condition number. (*Note: Title V permit condition numbers alone are not the underlying applicable requirements*). If an emission limit is calculated based on the type of source and design capacity or if a standard is based on a design parameter, this information should also be included.

40CFR §63.1316(b)(2)(i); 40CFR §63.1316(b)(2)(i)(A); R13-1650K §4.1.15:

- Organic HAP emissions from all continuous process vents associated with esterification vessels ≤ 0.04 kg organic HAP per Mg of product.

X Permit Shield

For all applicable requirements listed above, provide monitoring/testing/recordkeeping/reporting which shall be used to demonstrate compliance. If the method is based on a permit or rule, include the condition number or citation. (Note: Each requirement listed above must have an associated method of demonstrating compliance. If there is not already a required method in place, then a method must be proposed.)

Monitoring:

- Control device comply with applicable provisions of 40CFR §63.114.

Are you in compliance with all applicable requirements for this emission unit? X Yes ___No

If no, complete the **Schedule of Compliance Form** as **ATTACHMENT F**.

ATTACHMENT E - Emission Unit Form

Emission Unit Description

Emission unit ID number:	**Emission unit name:**	**List any control devices associated with this emission unit:**
C3L-F-3150	CP-3 R/2 EG Charge Tank	NA

Provide a description of the emission unit (type, method of operation, design parameters, etc.):
CP-3 R/2 EG Charge Tank

Manufacturer:	**Model number:**	**Serial number:**
NA	NA	NA
Construction date:	**Installation date:**	**Modification date(s):**
NA	1994	NA

Design Capacity (examples: furnaces - tons/hr, tanks - gallons):
275 gallons

Maximum Hourly Throughput:	**Maximum Annual Throughput:**	**Maximum Operating Schedule:**
11,160 gph	97.8 mmgal/yr	8,760 hr/yr

Fuel Usage Data **(fill out all applicable fields)**

Does this emission unit combust fuel? ___ Yes X No	**If yes, is it?** ___ Indirect Fired ___Direct Fired
Maximum design heat input and/or maximum horsepower rating: NA	**Type and Btu/hr rating of burners:** NA

List the primary fuel type(s) and if applicable, the secondary fuel type(s). For each fuel type listed, provide the maximum hourly and annual fuel usage for each.
NA

Describe each fuel expected to be used during the term of the permit.

Fuel Type	Max. Sulfur Content	Max. Ash Content	BTU Value
NA	NA	NA	NA

Emissions Data		
Criteria Pollutants	Potential Emissions	
	PPH	TPY
Carbon Monoxide (CO)	NA	NA
Nitrogen Oxides (NO_X)	NA	NA
Lead (Pb)	NA	NA
Particulate Matter ($PM_{2.5}$)	NA	NA
Particulate Matter (PM_{10})	NA	NA
Total Particulate Matter (TSP)	NA	NA
Sulfur Dioxide (SO_2)	NA	NA
Volatile Organic Compounds (VOC)	Emissions included with R/1 Recupic Charge Tank C3L-F-3180.	
Hazardous Air Pollutants	Potential Emissions	
	PPH	TPY
Ethylene Glycol	Emissions included with R/1 Recupic Charge Tank C3L-F-3180.	
Regulated Pollutants other than Criteria and HAP	Potential Emissions	
	PPH	TPY
NA	NA	NA

List the method(s) used to calculate the potential emissions (include dates of any stack tests conducted, versions of software used, source and dates of emission factors, etc.).

Engineering Estimate

Applicable Requirements

List all applicable requirements for this emission unit. For each applicable requirement, include the underlying rule/regulation citation and/or construction permit with the condition number. (*Note: Title V permit condition numbers alone are not the underlying applicable requirements*). If an emission limit is calculated based on the type of source and design capacity or if a standard is based on a design parameter, this information should also be included.

40CFR §63.1316(b)(2)(i); 40CFR §63.1316(b)(2)(i)(A); R13-1650K §4.1.15:

- Organic HAP emissions from all continuous process vents associated with esterification vessels ≤ 0.04 kg organic HAP per Mg of product.

X Permit Shield

For all applicable requirements listed above, provide monitoring/testing/recordkeeping/reporting which shall be used to demonstrate compliance. If the method is based on a permit or rule, include the condition number or citation. (Note: Each requirement listed above must have an associated method of demonstrating compliance. If there is not already a required method in place, then a method must be proposed.)

Monitoring:

- Control device comply with applicable provisions of 40CFR §63.114.

Are you in compliance with all applicable requirements for this emission unit? X Yes ___No

If no, complete the **Schedule of Compliance Form** as **ATTACHMENT F**.

ATTACHMENT E - Emission Unit Form

Emission Unit Description

Emission unit ID number:	**Emission unit name:**	**List any control devices associated with this emission unit:**
C32-E-1050	CP-3 R/2 System	C3T-B-1600

Provide a description of the emission unit (type, method of operation, design parameters, etc.):
CP-3 R/2 System

Manufacturer:	**Model number:**	**Serial number:**
NA	NA	NA
Construction date:	**Installation date:**	**Modification date(s):**
NA	1994	NA

Design Capacity (examples: furnaces - tons/hr, tanks - gallons):
2,970 gallons

Maximum Hourly Throughput:	**Maximum Annual Throughput:**	**Maximum Operating Schedule:**
70,000 lb/hr	306,600 tpy	8,760 hr/yr

Fuel Usage Data **(fill out all applicable fields)**

Does this emission unit combust fuel? ___ Yes X No	**If yes, is it?** ___ Indirect Fired ___Direct Fired
Maximum design heat input and/or maximum horsepower rating: NA	**Type and Btu/hr rating of burners:** NA

List the primary fuel type(s) and if applicable, the secondary fuel type(s). For each fuel type listed, provide the maximum hourly and annual fuel usage for each.
NA

Describe each fuel expected to be used during the term of the permit.

Fuel Type	Max. Sulfur Content	Max. Ash Content	BTU Value
NA	NA	NA	NA

Emissions Data		
Criteria Pollutants	Potential Emissions	
	PPH	TPY
Carbon Monoxide (CO)	See emissions from Hot Oil Heater C3T-B-1600.	
Nitrogen Oxides (NO_X)		
Lead (Pb)		
Particulate Matter ($PM_{2.5}$)		
Particulate Matter (PM_{10})		
Total Particulate Matter (TSP)		
Sulfur Dioxide (SO_2)		
Volatile Organic Compounds (VOC)		
Hazardous Air Pollutants	Potential Emissions	
	PPH	TPY
See emissions from Hot Oil Heater C3T-B-1600.		
Regulated Pollutants other than Criteria and HAP	Potential Emissions	
	PPH	TPY
NA	NA	NA

List the method(s) used to calculate the potential emissions (include dates of any stack tests conducted, versions of software used, source and dates of emission factors, etc.).

Engineering Estimate

Applicable Requirements

List all applicable requirements for this emission unit. For each applicable requirement, include the underlying rule/regulation citation and/or construction permit with the condition number. (*Note: Title V permit condition numbers alone are not the underlying applicable requirements*). If an emission limit is calculated based on the type of source and design capacity or if a standard is based on a design parameter, this information should also be included.

40CFR §63.1316(b)(2)(i); 40CFR §63.1316(b)(2)(i)(A); R13-1650K §4.1.15:

- Organic HAP emissions from all continuous process vents associated with esterification vessels ≤ 0.04 kg organic HAP per Mg of product.

X Permit Shield

For all applicable requirements listed above, provide monitoring/testing/recordkeeping/reporting which shall be used to demonstrate compliance. If the method is based on a permit or rule, include the condition number or citation. (Note: Each requirement listed above must have an associated method of demonstrating compliance. If there is not already a required method in place, then a method must be proposed.)

Monitoring:

- Control device comply with applicable provisions of 40CFR §63.114.

Are you in compliance with all applicable requirements for this emission unit? X Yes ___No

If no, complete the **Schedule of Compliance Form** as **ATTACHMENT F**.

ATTACHMENT E - Emission Unit Form

Emission Unit Description

Emission unit ID number:	**Emission unit name:**	**List any control devices associated with this emission unit:**
C33-F-5010	CP-3 R/3 Bis System	C3T-B-1600

Provide a description of the emission unit (type, method of operation, design parameters, etc.):
CP-3 R/3 Bis System

Manufacturer:	**Model number:**	**Serial number:**
NA	NA	NA
Construction date:	**Installation date:**	**Modification date(s):**
NA	2001	NA

Design Capacity (examples: furnaces - tons/hr, tanks - gallons):
2,970 gallons

Maximum Hourly Throughput:	**Maximum Annual Throughput:**	**Maximum Operating Schedule:**
70,000 lb/hr	306,600 tpy	8,760 hr/yr

Fuel Usage Data **(fill out all applicable fields)**

Does this emission unit combust fuel? ___ Yes X No	**If yes, is it?** ___ Indirect Fired ___Direct Fired
Maximum design heat input and/or maximum horsepower rating: NA	**Type and Btu/hr rating of burners:** NA

List the primary fuel type(s) and if applicable, the secondary fuel type(s). For each fuel type listed, provide the maximum hourly and annual fuel usage for each.
NA

Describe each fuel expected to be used during the term of the permit.

Fuel Type	Max. Sulfur Content	Max. Ash Content	BTU Value
NA	NA	NA	NA

Emissions Data		
Criteria Pollutants	Potential Emissions	
	PPH	TPY
Carbon Monoxide (CO)	See emissions from Hot Oil Heater C3T-B-1600.	
Nitrogen Oxides (NO_X)		
Lead (Pb)		
Particulate Matter ($PM_{2.5}$)		
Particulate Matter (PM_{10})		
Total Particulate Matter (TSP)		
Sulfur Dioxide (SO_2)		
Volatile Organic Compounds (VOC)		
Hazardous Air Pollutants	Potential Emissions	
	PPH	TPY
See emissions from Hot Oil Heater C3T-B-1600.		
Regulated Pollutants other than Criteria and HAP	Potential Emissions	
	PPH	TPY
NA	NA	NA

List the method(s) used to calculate the potential emissions (include dates of any stack tests conducted, versions of software used, source and dates of emission factors, etc.).

Engineering Estimate

Applicable Requirements

List all applicable requirements for this emission unit. For each applicable requirement, include the underlying rule/regulation citation and/or construction permit with the condition number. (*Note: Title V permit condition numbers alone are not the underlying applicable requirements*). If an emission limit is calculated based on the type of source and design capacity or if a standard is based on a design parameter, this information should also be included.

40CFR §63.1316(b)(2)(i); 40CFR §63.1316(b)(2)(i)(A); R13-1650K §4.1.15:

- Organic HAP emissions from all continuous process vents associated with polymerization reactor sections ≤ 0.02 kg organic HAP per Mg of product.

X Permit Shield

For all applicable requirements listed above, provide monitoring/testing/recordkeeping/reporting which shall be used to demonstrate compliance. If the method is based on a permit or rule, include the condition number or citation. (Note: Each requirement listed above must have an associated method of demonstrating compliance. If there is not already a required method in place, then a method must be proposed.)

Monitoring:

- Control device comply with applicable provisions of 40CFR §63.114.

Are you in compliance with all applicable requirements for this emission unit? X Yes ___No

If no, complete the **Schedule of Compliance Form** as **ATTACHMENT F**.

ATTACHMENT E - Emission Unit Form

Emission Unit Description

Emission unit ID number:	**Emission unit name:**	**List any control devices associated with this emission unit:**
C33-F-2260	CP-3 R/3 Condensate Tank	C3T-B-1600

Provide a description of the emission unit (type, method of operation, design parameters, etc.):
CP-3 R/3 Condensate Tank

Manufacturer:	**Model number:**	**Serial number:**
NA	NA	NA
Construction date:	**Installation date:**	**Modification date(s):**
NA	1994	NA

Design Capacity (examples: furnaces - tons/hr, tanks - gallons):
1,409 gpm

Maximum Hourly Throughput:	**Maximum Annual Throughput:**	**Maximum Operating Schedule:**
84,540 gph	741 mmgpy	8,760 hr/yr

Fuel Usage Data **(fill out all applicable fields)**

Does this emission unit combust fuel? ___ Yes X No	**If yes, is it?** ___ Indirect Fired ___Direct Fired
Maximum design heat input and/or maximum horsepower rating: NA	**Type and Btu/hr rating of burners:** NA

List the primary fuel type(s) and if applicable, the secondary fuel type(s). For each fuel type listed, provide the maximum hourly and annual fuel usage for each.
NA

Describe each fuel expected to be used during the term of the permit.

Fuel Type	Max. Sulfur Content	Max. Ash Content	BTU Value
NA	NA	NA	NA

Emissions Data		
Criteria Pollutants	Potential Emissions	
	PPH	TPY
Carbon Monoxide (CO)	See emissions from Hot Oil Heater C3T-B-1600.	
Nitrogen Oxides (NO_X)		
Lead (Pb)		
Particulate Matter ($PM_{2.5}$)		
Particulate Matter (PM_{10})		
Total Particulate Matter (TSP)		
Sulfur Dioxide (SO_2)		
Volatile Organic Compounds (VOC)		
Hazardous Air Pollutants	Potential Emissions	
	PPH	TPY
See emissions from Hot Oil Heater C3T-B-1600.		
Regulated Pollutants other than Criteria and HAP	Potential Emissions	
	PPH	TPY
NA	NA	NA

List the method(s) used to calculate the potential emissions (include dates of any stack tests conducted, versions of software used, source and dates of emission factors, etc.).

Engineering Estimate

Applicable Requirements

List all applicable requirements for this emission unit. For each applicable requirement, include the underlying rule/regulation citation and/or construction permit with the condition number. (*Note: Title V permit condition numbers alone are not the underlying applicable requirements*). If an emission limit is calculated based on the type of source and design capacity or if a standard is based on a design parameter, this information should also be included.

40CFR §63.1316(b)(2)(i); 40CFR §63.1316(b)(2)(i)(A); R13-1650K §4.1.15:

- Organic HAP emissions from all continuous process vents associated with polymerization reactor sections ≤ 0.02 kg organic HAP per Mg of product.

X Permit Shield

For all applicable requirements listed above, provide monitoring/testing/recordkeeping/reporting which shall be used to demonstrate compliance. If the method is based on a permit or rule, include the condition number or citation. (Note: Each requirement listed above must have an associated method of demonstrating compliance. If there is not already a required method in place, then a method must be proposed.)

Monitoring:

- Control device comply with applicable provisions of 40CFR §63.114.

Are you in compliance with all applicable requirements for this emission unit? X Yes ___No

If no, complete the **Schedule of Compliance Form** as **ATTACHMENT F**.

ATTACHMENT E - Emission Unit Form

Emission Unit Description

Emission unit ID number:	**Emission unit name:**	**List any control devices associated with this emission unit:**
C33-F-2250	CP-3 R/3 System	C3T-B-1600

Provide a description of the emission unit (type, method of operation, design parameters, etc.):
CP-3 R/3 System

Manufacturer:	**Model number:**	**Serial number:**
NA	NA	NA
Construction date:	**Installation date:**	**Modification date(s):**
NA	1994	NA

Design Capacity (examples: furnaces - tons/hr, tanks - gallons):
2,517 gallons

Maximum Hourly Throughput:	**Maximum Annual Throughput:**	**Maximum Operating Schedule:**
70,000 lb/hr	306,600 tpy	8,760 hr/yr

Fuel Usage Data **(fill out all applicable fields)**

Does this emission unit combust fuel? ___ Yes X No	**If yes, is it?** ___ Indirect Fired ___Direct Fired
Maximum design heat input and/or maximum horsepower rating: NA	**Type and Btu/hr rating of burners:** NA

List the primary fuel type(s) and if applicable, the secondary fuel type(s). For each fuel type listed, provide the maximum hourly and annual fuel usage for each.
NA

Describe each fuel expected to be used during the term of the permit.

Fuel Type	Max. Sulfur Content	Max. Ash Content	BTU Value
NA	NA	NA	NA

Emissions Data		
Criteria Pollutants	Potential Emissions	
	PPH	TPY
Carbon Monoxide (CO)	See emissions from Hot Oil Heater C3T-B-1600.	
Nitrogen Oxides (NO_X)		
Lead (Pb)		
Particulate Matter ($PM_{2.5}$)		
Particulate Matter (PM_{10})		
Total Particulate Matter (TSP)		
Sulfur Dioxide (SO_2)		
Volatile Organic Compounds (VOC)		
Hazardous Air Pollutants	Potential Emissions	
	PPH	TPY
See emissions from Hot Oil Heater C3T-B-1600.		
Regulated Pollutants other than Criteria and HAP	Potential Emissions	
	PPH	TPY
NA	NA	NA

List the method(s) used to calculate the potential emissions (include dates of any stack tests conducted, versions of software used, source and dates of emission factors, etc.).

Engineering Estimate

Applicable Requirements

List all applicable requirements for this emission unit. For each applicable requirement, include the underlying rule/regulation citation and/or construction permit with the condition number. (*Note: Title V permit condition numbers alone are not the underlying applicable requirements*). If an emission limit is calculated based on the type of source and design capacity or if a standard is based on a design parameter, this information should also be included.

40CFR §63.1316(b)(2)(i); 40CFR §63.1316(b)(2)(i)(A); R13-1650K §4.1.15:

- Organic HAP emissions from all continuous process vents associated with polymerization reactor sections ≤ 0.02 kg organic HAP per Mg of product.

X Permit Shield

For all applicable requirements listed above, provide monitoring/testing/recordkeeping/reporting which shall be used to demonstrate compliance. If the method is based on a permit or rule, include the condition number or citation. (Note: Each requirement listed above must have an associated method of demonstrating compliance. If there is not already a required method in place, then a method must be proposed.)

Monitoring:

- Control device comply with applicable provisions of 40CFR §63.114.

Are you in compliance with all applicable requirements for this emission unit? X Yes ___No

If no, complete the **Schedule of Compliance Form** as **ATTACHMENT F**.

ATTACHMENT E - Emission Unit Form

Emission Unit Description

Emission unit ID number:	**Emission unit name:**	**List any control devices associated with this emission unit:**
C3U-F-1730	CP-3 R/3 TEG Bath	NA

Provide a description of the emission unit (type, method of operation, design parameters, etc.):
CP-3 R/3 TEG Bath

Manufacturer:	**Model number:**	**Serial number:**
NA	NA	NA
Construction date:	**Installation date:**	**Modification date(s):**
NA	1994	NA

Design Capacity (examples: furnaces - tons/hr, tanks - gallons):
8” x 30” t/t

Maximum Hourly Throughput:	**Maximum Annual Throughput:**	**Maximum Operating Schedule:**
900 gph	4,725 gpy	8,760 hr/yr

Fuel Usage Data **(fill out all applicable fields)**

Does this emission unit combust fuel? ___ Yes X No	**If yes, is it?** ___ Indirect Fired ___Direct Fired
Maximum design heat input and/or maximum horsepower rating: NA	**Type and Btu/hr rating of burners:** NA

List the primary fuel type(s) and if applicable, the secondary fuel type(s). For each fuel type listed, provide the maximum hourly and annual fuel usage for each.
NA

Describe each fuel expected to be used during the term of the permit.

Fuel Type	Max. Sulfur Content	Max. Ash Content	BTU Value
NA	NA	NA	NA

Emissions Data		
Criteria Pollutants	Potential Emissions	
	PPH	TPY
Carbon Monoxide (CO)	NA	NA
Nitrogen Oxides (NO_X)	NA	NA
Lead (Pb)	NA	NA
Particulate Matter ($PM_{2.5}$)	NA	NA
Particulate Matter (PM_{10})	NA	NA
Total Particulate Matter (TSP)	NA	NA
Sulfur Dioxide (SO_2)	NA	NA
Volatile Organic Compounds (VOC)	0.02	0.002
Hazardous Air Pollutants	Potential Emissions	
	PPH	TPY
NA	NA	NA
Regulated Pollutants other than Criteria and HAP	Potential Emissions	
	PPH	TPY
NA	NA	NA

List the method(s) used to calculate the potential emissions (include dates of any stack tests conducted, versions of software used, source and dates of emission factors, etc.).

Engineering Estimate

Applicable Requirements
List all applicable requirements for this emission unit. For each applicable requirement, include the underlying rule/regulation citation and/or construction permit with the condition number. (*Note: Title V permit condition numbers alone are not the underlying applicable requirements*). If an emission limit is calculated based on the type of source and design capacity or if a standard is based on a design parameter, this information should also be included. NA
X Permit Shield
For all applicable requirements listed above, provide monitoring/testing/recordkeeping/reporting which shall be used to demonstrate compliance. If the method is based on a permit or rule, include the condition number or citation. (Note: Each requirement listed above must have an associated method of demonstrating compliance. If there is not already a required method in place, then a method must be proposed.) NA
Are you in compliance with all applicable requirements for this emission unit? X Yes ___No If no, complete the **Schedule of Compliance Form** as **ATTACHMENT F**.

ATTACHMENT E - Emission Unit Form

Emission Unit Description

Emission unit ID number:	**Emission unit name:**	**List any control devices associated with this emission unit:**
C34-F-2290	CP-3 R/4A Condensate Tank	C3T-B-1600

Provide a description of the emission unit (type, method of operation, design parameters, etc.):
CP-3 R/4A Condensate Tank

Manufacturer:	**Model number:**	**Serial number:**
NA	NA	NA
Construction date:	**Installation date:**	**Modification date(s):**
NA	1994	NA

Design Capacity (examples: furnaces - tons/hr, tanks - gallons):
950 gpm

Maximum Hourly Throughput:	**Maximum Annual Throughput:**	**Maximum Operating Schedule:**
57,000 gph	499 mmgpy	8,760 hr/yr

Fuel Usage Data **(fill out all applicable fields)**

Does this emission unit combust fuel? ___ Yes X No	**If yes, is it?** ___ Indirect Fired ___Direct Fired
Maximum design heat input and/or maximum horsepower rating: NA	**Type and Btu/hr rating of burners:** NA

List the primary fuel type(s) and if applicable, the secondary fuel type(s). For each fuel type listed, provide the maximum hourly and annual fuel usage for each.
NA

Describe each fuel expected to be used during the term of the permit.

Fuel Type	Max. Sulfur Content	Max. Ash Content	BTU Value
NA	NA	NA	NA

Emissions Data		
Criteria Pollutants	Potential Emissions	
	PPH	TPY
Carbon Monoxide (CO)	See emissions from Hot Oil Heater C3T-B-1600.	
Nitrogen Oxides (NO_X)		
Lead (Pb)		
Particulate Matter ($PM_{2.5}$)		
Particulate Matter (PM_{10})		
Total Particulate Matter (TSP)		
Sulfur Dioxide (SO_2)		
Volatile Organic Compounds (VOC)		
Hazardous Air Pollutants	Potential Emissions	
	PPH	TPY
See emissions from Hot Oil Heater C3T-B-1600.		
Regulated Pollutants other than Criteria and HAP	Potential Emissions	
	PPH	TPY
NA	NA	NA

List the method(s) used to calculate the potential emissions (include dates of any stack tests conducted, versions of software used, source and dates of emission factors, etc.).

Engineering Estimate

Applicable Requirements

List all applicable requirements for this emission unit. For each applicable requirement, include the underlying rule/regulation citation and/or construction permit with the condition number. (*Note: Title V permit condition numbers alone are not the underlying applicable requirements*). If an emission limit is calculated based on the type of source and design capacity or if a standard is based on a design parameter, this information should also be included.

40CFR §63.1316(b)(2)(i); 40CFR §63.1316(b)(2)(i)(A); R13-1650K §4.1.15:

- Organic HAP emissions from all continuous process vents associated with polymerization reactor sections ≤ 0.02 kg organic HAP per Mg of product.

X Permit Shield

For all applicable requirements listed above, provide monitoring/testing/recordkeeping/reporting which shall be used to demonstrate compliance. If the method is based on a permit or rule, include the condition number or citation. (Note: Each requirement listed above must have an associated method of demonstrating compliance. If there is not already a required method in place, then a method must be proposed.)

Monitoring:

- Control device comply with applicable provisions of 40CFR §63.114.

Are you in compliance with all applicable requirements for this emission unit? X Yes ___No

If no, complete the **Schedule of Compliance Form** as **ATTACHMENT F**.

ATTACHMENT E - Emission Unit Form

Emission Unit Description

Emission unit ID number:	**Emission unit name:**	**List any control devices associated with this emission unit:**
C34-F-3280	CP-3 R/4A System	C3T-B-1600

Provide a description of the emission unit (type, method of operation, design parameters, etc.):
CP-3 R/4A System

Manufacturer:	**Model number:**	**Serial number:**
NA	NA	NA
Construction date:	**Installation date:**	**Modification date(s):**
NA	1994	NA

Design Capacity (examples: furnaces - tons/hr, tanks - gallons):
70,000 lb/hr

Maximum Hourly Throughput:	**Maximum Annual Throughput:**	**Maximum Operating Schedule:**
70,000 lb/hr	306,600 tpy	8,760 hr/yr

Fuel Usage Data **(fill out all applicable fields)**

Does this emission unit combust fuel? ___ Yes X No	**If yes, is it?** ___ Indirect Fired ___Direct Fired
Maximum design heat input and/or maximum horsepower rating: NA	**Type and Btu/hr rating of burners:** NA

List the primary fuel type(s) and if applicable, the secondary fuel type(s). For each fuel type listed, provide the maximum hourly and annual fuel usage for each.
NA

Describe each fuel expected to be used during the term of the permit.

Fuel Type	Max. Sulfur Content	Max. Ash Content	BTU Value
NA	NA	NA	NA

Emissions Data		
Criteria Pollutants	Potential Emissions	
	PPH	TPY
Carbon Monoxide (CO)	See emissions from Hot Oil Heater C3T-B-1600.	
Nitrogen Oxides (NO_X)		
Lead (Pb)		
Particulate Matter ($PM_{2.5}$)		
Particulate Matter (PM_{10})		
Total Particulate Matter (TSP)		
Sulfur Dioxide (SO_2)		
Volatile Organic Compounds (VOC)		
Hazardous Air Pollutants	Potential Emissions	
	PPH	TPY
See emissions from Hot Oil Heater C3T-B-1600.		
Regulated Pollutants other than Criteria and HAP	Potential Emissions	
	PPH	TPY
NA	NA	NA

List the method(s) used to calculate the potential emissions (include dates of any stack tests conducted, versions of software used, source and dates of emission factors, etc.).

Engineering Estimate

Applicable Requirements

List all applicable requirements for this emission unit. For each applicable requirement, include the underlying rule/regulation citation and/or construction permit with the condition number. (*Note: Title V permit condition numbers alone are not the underlying applicable requirements*). If an emission limit is calculated based on the type of source and design capacity or if a standard is based on a design parameter, this information should also be included.

40CFR §63.1316(b)(2)(i); 40CFR §63.1316(b)(2)(i)(A); R13-1650K §4.1.15:

- Organic HAP emissions from all continuous process vents associated with polymerization reactor sections ≤ 0.02 kg organic HAP per Mg of product.

X Permit Shield

For all applicable requirements listed above, provide monitoring/testing/recordkeeping/reporting which shall be used to demonstrate compliance. If the method is based on a permit or rule, include the condition number or citation. (Note: Each requirement listed above must have an associated method of demonstrating compliance. If there is not already a required method in place, then a method must be proposed.)

Monitoring:

- Control device comply with applicable provisions of 40CFR §63.114.

Are you in compliance with all applicable requirements for this emission unit? X Yes ___No

If no, complete the **Schedule of Compliance Form** as **ATTACHMENT F**.

ATTACHMENT E - Emission Unit Form

Emission Unit Description

Emission unit ID number:	**Emission unit name:**	**List any control devices associated with this emission unit:**
C34-F-8290	CP-3 R/4B Condensate Tank	C3T-B-1600

Provide a description of the emission unit (type, method of operation, design parameters, etc.):
CP-3 R/4B Condensate Tank

Manufacturer:	**Model number:**	**Serial number:**
NA	NA	NA
Construction date:	**Installation date:**	**Modification date(s):**
NA	2007	NA

Design Capacity (examples: furnaces - tons/hr, tanks - gallons):
950 gpm

Maximum Hourly Throughput:	**Maximum Annual Throughput:**	**Maximum Operating Schedule:**
57,000 gph	499 mmgpy	8,760 hr/yr

Fuel Usage Data **(fill out all applicable fields)**

Does this emission unit combust fuel? ___ Yes X No	**If yes, is it?** ___ Indirect Fired ___Direct Fired
Maximum design heat input and/or maximum horsepower rating: NA	**Type and Btu/hr rating of burners:** NA

List the primary fuel type(s) and if applicable, the secondary fuel type(s). For each fuel type listed, provide the maximum hourly and annual fuel usage for each.
NA

Describe each fuel expected to be used during the term of the permit.

Fuel Type	Max. Sulfur Content	Max. Ash Content	BTU Value
NA	NA	NA	NA

Emissions Data		
Criteria Pollutants	Potential Emissions	
	PPH	TPY
Carbon Monoxide (CO)	See emissions from Hot Oil Heater C3T-B-1600.	
Nitrogen Oxides (NO_X)		
Lead (Pb)		
Particulate Matter ($PM_{2.5}$)		
Particulate Matter (PM_{10})		
Total Particulate Matter (TSP)		
Sulfur Dioxide (SO_2)		
Volatile Organic Compounds (VOC)		
Hazardous Air Pollutants	Potential Emissions	
	PPH	TPY
See emissions from Hot Oil Heater C3T-B-1600.		
Regulated Pollutants other than Criteria and HAP	Potential Emissions	
	PPH	TPY
NA	NA	NA

List the method(s) used to calculate the potential emissions (include dates of any stack tests conducted, versions of software used, source and dates of emission factors, etc.).

Engineering Estimate

Applicable Requirements
List all applicable requirements for this emission unit. For each applicable requirement, include the underlying rule/regulation citation and/or construction permit with the condition number. (*Note: Title V permit condition numbers alone are not the underlying applicable requirements*). If an emission limit is calculated based on the type of source and design capacity or if a standard is based on a design parameter, this information should also be included. NA
X Permit Shield
For all applicable requirements listed above, provide monitoring/testing/recordkeeping/reporting which shall be used to demonstrate compliance. If the method is based on a permit or rule, include the condition number or citation. (Note: Each requirement listed above must have an associated method of demonstrating compliance. If there is not already a required method in place, then a method must be proposed.) NA
Are you in compliance with all applicable requirements for this emission unit? X Yes ___No If no, complete the **Schedule of Compliance Form** as **ATTACHMENT F**.

ATTACHMENT E - Emission Unit Form

Emission Unit Description

Emission unit ID number:	**Emission unit name:**	**List any control devices associated with this emission unit:**
C34-F-9280	CP-3 R/4B System	C3T-B-1600

Provide a description of the emission unit (type, method of operation, design parameters, etc.):
CP-3 R/4B System

Manufacturer:	**Model number:**	**Serial number:**
NA	NA	NA
Construction date:	**Installation date:**	**Modification date(s):**
NA	2007	NA

Design Capacity (examples: furnaces - tons/hr, tanks - gallons):
70,000 lb/hr

Maximum Hourly Throughput:	**Maximum Annual Throughput:**	**Maximum Operating Schedule:**
70,000 lb/hr	306,600 tpy	8,760 hr/yr

Fuel Usage Data **(fill out all applicable fields)**

Does this emission unit combust fuel? ___ Yes X No	**If yes, is it?** ___ Indirect Fired ___Direct Fired
Maximum design heat input and/or maximum horsepower rating: NA	**Type and Btu/hr rating of burners:** NA

List the primary fuel type(s) and if applicable, the secondary fuel type(s). For each fuel type listed, provide the maximum hourly and annual fuel usage for each.
NA

Describe each fuel expected to be used during the term of the permit.

Fuel Type	Max. Sulfur Content	Max. Ash Content	BTU Value
NA	NA	NA	NA

Emissions Data		
Criteria Pollutants	Potential Emissions	
	PPH	TPY
Carbon Monoxide (CO)	See emissions from Hot Oil Heater C3T-B-1600.	
Nitrogen Oxides (NO_X)		
Lead (Pb)		
Particulate Matter ($PM_{2.5}$)		
Particulate Matter (PM_{10})		
Total Particulate Matter (TSP)		
Sulfur Dioxide (SO_2)		
Volatile Organic Compounds (VOC)		
Hazardous Air Pollutants	Potential Emissions	
	PPH	TPY
See emissions from Hot Oil Heater C3T-B-1600.		
Regulated Pollutants other than Criteria and HAP	Potential Emissions	
	PPH	TPY
NA	NA	NA

List the method(s) used to calculate the potential emissions (include dates of any stack tests conducted, versions of software used, source and dates of emission factors, etc.).

Engineering Estimate

Applicable Requirements
List all applicable requirements for this emission unit. For each applicable requirement, include the underlying rule/regulation citation and/or construction permit with the condition number. (*Note: Title V permit condition numbers alone are not the underlying applicable requirements*). If an emission limit is calculated based on the type of source and design capacity or if a standard is based on a design parameter, this information should also be included. NA
X Permit Shield
For all applicable requirements listed above, provide monitoring/testing/recordkeeping/reporting which shall be used to demonstrate compliance. If the method is based on a permit or rule, include the condition number or citation. (Note: Each requirement listed above must have an associated method of demonstrating compliance. If there is not already a required method in place, then a method must be proposed.) NA
Are you in compliance with all applicable requirements for this emission unit? X Yes ___No If no, complete the **Schedule of Compliance Form** as **ATTACHMENT F**.

ATTACHMENT E - Emission Unit Form

Emission Unit Description

Emission unit ID number:	**Emission unit name:**	**List any control devices associated with this emission unit:**
C3L-F-1120	CP-3 Recupic EG Dump Tank	NA

Provide a description of the emission unit (type, method of operation, design parameters, etc.):
CP-3 Recupic EG Dump Tank

Manufacturer:	**Model number:**	**Serial number:**
NA	NA	NA
Construction date:	**Installation date:**	**Modification date(s):**
NA	1994	NA

Design Capacity (examples: furnaces - tons/hr, tanks - gallons):
5,000 gallons

Maximum Hourly Throughput:	**Maximum Annual Throughput:**	**Maximum Operating Schedule:**
1,800 gph	19.5 mmgal/yr	8,760 hr/yr

Fuel Usage Data **(fill out all applicable fields)**

Does this emission unit combust fuel? ___ Yes X No	**If yes, is it?** ___ Indirect Fired ___Direct Fired
Maximum design heat input and/or maximum horsepower rating: NA	**Type and Btu/hr rating of burners:** NA

List the primary fuel type(s) and if applicable, the secondary fuel type(s). For each fuel type listed, provide the maximum hourly and annual fuel usage for each.
NA

Describe each fuel expected to be used during the term of the permit.

Fuel Type	Max. Sulfur Content	Max. Ash Content	BTU Value
NA	NA	NA	NA

Emissions Data		
Criteria Pollutants	Potential Emissions	
	PPH	TPY
Carbon Monoxide (CO)	NA	NA
Nitrogen Oxides (NO_X)	NA	NA
Lead (Pb)	NA	NA
Particulate Matter ($PM_{2.5}$)	NA	NA
Particulate Matter (PM_{10})	NA	NA
Total Particulate Matter (TSP)	NA	NA
Sulfur Dioxide (SO_2)	NA	NA
Volatile Organic Compounds (VOC)	0.01	0.02
Hazardous Air Pollutants	Potential Emissions	
	PPH	TPY
Ethylene Glycol	0.01	0.02
Regulated Pollutants other than Criteria and HAP	Potential Emissions	
	PPH	TPY
NA	NA	NA

List the method(s) used to calculate the potential emissions (include dates of any stack tests conducted, versions of software used, source and dates of emission factors, etc.).

Engineering Estimate

Applicable Requirements
List all applicable requirements for this emission unit. For each applicable requirement, include the underlying rule/regulation citation and/or construction permit with the condition number. (*Note: Title V permit condition numbers alone are not the underlying applicable requirements*). If an emission limit is calculated based on the type of source and design capacity or if a standard is based on a design parameter, this information should also be included. NA
X Permit Shield
For all applicable requirements listed above, provide monitoring/testing/recordkeeping/reporting which shall be used to demonstrate compliance. If the method is based on a permit or rule, include the condition number or citation. (Note: Each requirement listed above must have an associated method of demonstrating compliance. If there is not already a required method in place, then a method must be proposed.) NA
Are you in compliance with all applicable requirements for this emission unit? X Yes ___No If no, complete the **Schedule of Compliance Form** as **ATTACHMENT F**.

ATTACHMENT E - Emission Unit Form

Emission Unit Description

Emission unit ID number:	**Emission unit name:**	**List any control devices associated with this emission unit:**
C3L-F-1070	CP-3 Recupic EG Tank	NA

Provide a description of the emission unit (type, method of operation, design parameters, etc.):
CP-3 Recupic EG Tank

Manufacturer:	**Model number:**	**Serial number:**
NA	NA	NA
Construction date:	**Installation date:**	**Modification date(s):**
NA	1994	NA

Design Capacity (examples: furnaces - tons/hr, tanks - gallons):
12,700 gallons

Maximum Hourly Throughput:	**Maximum Annual Throughput:**	**Maximum Operating Schedule:**
1,800 gph	19.5 mmgal/yr	8,760 hr/yr

Fuel Usage Data **(fill out all applicable fields)**

Does this emission unit combust fuel? ___ Yes X No	**If yes, is it?** ___ Indirect Fired ___Direct Fired
Maximum design heat input and/or maximum horsepower rating: NA	**Type and Btu/hr rating of burners:** NA

List the primary fuel type(s) and if applicable, the secondary fuel type(s). For each fuel type listed, provide the maximum hourly and annual fuel usage for each.
NA

Describe each fuel expected to be used during the term of the permit.

Fuel Type	Max. Sulfur Content	Max. Ash Content	BTU Value
NA	NA	NA	NA

Emissions Data		
Criteria Pollutants	Potential Emissions	
	PPH	TPY
Carbon Monoxide (CO)	NA	NA
Nitrogen Oxides (NO_X)	NA	NA
Lead (Pb)	NA	NA
Particulate Matter ($PM_{2.5}$)	NA	NA
Particulate Matter (PM_{10})	NA	NA
Total Particulate Matter (TSP)	NA	NA
Sulfur Dioxide (SO_2)	NA	NA
Volatile Organic Compounds (VOC)	0.01	0.02
Hazardous Air Pollutants	Potential Emissions	
	PPH	TPY
Ethylene Glycol	0.01	0.02
Regulated Pollutants other than Criteria and HAP	Potential Emissions	
	PPH	TPY
NA	NA	NA

List the method(s) used to calculate the potential emissions (include dates of any stack tests conducted, versions of software used, source and dates of emission factors, etc.).

Engineering Estimate

Applicable Requirements

List all applicable requirements for this emission unit. For each applicable requirement, include the underlying rule/regulation citation and/or construction permit with the condition number. (*Note: Title V permit condition numbers alone are not the underlying applicable requirements*). If an emission limit is calculated based on the type of source and design capacity or if a standard is based on a design parameter, this information should also be included.

40CFR §63.1316(b)(2)(i); 40CFR §63.1316(b)(2)(i)(A); R13-1650K §4.1.15:

- Organic HAP emissions from all continuous process vents associated with polymerization reactor sections ≤ 0.02 kg organic HAP per Mg of product.

X Permit Shield

For all applicable requirements listed above, provide monitoring/testing/recordkeeping/reporting which shall be used to demonstrate compliance. If the method is based on a permit or rule, include the condition number or citation. (Note: Each requirement listed above must have an associated method of demonstrating compliance. If there is not already a required method in place, then a method must be proposed.)

Monitoring:

- Control device comply with applicable provisions of 40CFR §63.114.

Are you in compliance with all applicable requirements for this emission unit? X Yes ___No

If no, complete the **Schedule of Compliance Form** as **ATTACHMENT F**.

ATTACHMENT E - Emission Unit Form

Emission Unit Description

Emission unit ID number:	**Emission unit name:**	**List any control devices associated with this emission unit:**
C3L-F-1071	CP-3 Recupic EG Tank	NA

Provide a description of the emission unit (type, method of operation, design parameters, etc.):
CP-3 Recupic EG Tank

Manufacturer:	**Model number:**	**Serial number:**
NA	NA	NA
Construction date:	**Installation date:**	**Modification date(s):**
NA	1994	NA

Design Capacity (examples: furnaces - tons/hr, tanks - gallons):
12,700 gallons

Maximum Hourly Throughput:	**Maximum Annual Throughput:**	**Maximum Operating Schedule:**
1,800 gph	19.5 mmgal/yr	8,760 hr/yr

Fuel Usage Data **(fill out all applicable fields)**

Does this emission unit combust fuel? ___ Yes X No	**If yes, is it?** ___ Indirect Fired ___Direct Fired
Maximum design heat input and/or maximum horsepower rating: NA	**Type and Btu/hr rating of burners:** NA

List the primary fuel type(s) and if applicable, the secondary fuel type(s). For each fuel type listed, provide the maximum hourly and annual fuel usage for each.
NA

Describe each fuel expected to be used during the term of the permit.

Fuel Type	Max. Sulfur Content	Max. Ash Content	BTU Value
NA	NA	NA	NA

Emissions Data		
Criteria Pollutants	Potential Emissions	
	PPH	TPY
Carbon Monoxide (CO)	NA	NA
Nitrogen Oxides (NO_X)	NA	NA
Lead (Pb)	NA	NA
Particulate Matter ($PM_{2.5}$)	NA	NA
Particulate Matter (PM_{10})	NA	NA
Total Particulate Matter (TSP)	NA	NA
Sulfur Dioxide (SO_2)	NA	NA
Volatile Organic Compounds (VOC)	0.01	0.02
Hazardous Air Pollutants	Potential Emissions	
	PPH	TPY
Ethylene Glycol	0.01	0.02
Regulated Pollutants other than Criteria and HAP	Potential Emissions	
	PPH	TPY
NA	NA	NA

List the method(s) used to calculate the potential emissions (include dates of any stack tests conducted, versions of software used, source and dates of emission factors, etc.).

Engineering Estimate

Applicable Requirements
List all applicable requirements for this emission unit. For each applicable requirement, include the underlying rule/regulation citation and/or <u>construction permit</u> with the condition number. (*Note: Title V permit condition numbers alone are not the underlying applicable requirements*). If an emission limit is calculated based on the type of source and design capacity or if a standard is based on a design parameter, this information should also be included. **40CFR §63.1316(b)(2)(i); 40CFR §63.1316(b)(2)(i)(A); R13-1650K §4.1.15:** • Organic HAP emissions from all continuous process vents associated with polymerization reactor sections ≤ 0.02 kg organic HAP per Mg of product.
<u>X</u> Permit Shield
For all applicable requirements listed above, provide monitoring/testing/recordkeeping/reporting which shall be used to demonstrate compliance. If the method is based on a permit or rule, include the condition number or citation. (Note: Each requirement listed above must have an associated method of demonstrating compliance. If there is not already a required method in place, then a method must be proposed.) *Monitoring:* • Control device comply with applicable provisions of 40CFR §63.114.
Are you in compliance with all applicable requirements for this emission unit? <u>X</u> Yes ___No If no, complete the **Schedule of Compliance Form** as **ATTACHMENT F**.

ATTACHMENT E - Emission Unit Form

Emission Unit Description

Emission unit ID number:	**Emission unit name:**	**List any control devices associated with this emission unit:**
C3L-F-1072	CP-3 Recupic EG Tank	NA

Provide a description of the emission unit (type, method of operation, design parameters, etc.):
CP-3 Recupic EG Tank

Manufacturer:	**Model number:**	**Serial number:**
NA	NA	NA
Construction date:	**Installation date:**	**Modification date(s):**
NA	1994	NA

Design Capacity (examples: furnaces - tons/hr, tanks - gallons):
12,700 gallons

Maximum Hourly Throughput:	**Maximum Annual Throughput:**	**Maximum Operating Schedule:**
1,800 gph	19.5 mmgal/yr	8,760 hr/yr

Fuel Usage Data **(fill out all applicable fields)**

Does this emission unit combust fuel? ___ Yes X No	**If yes, is it?** ___ Indirect Fired ___Direct Fired
Maximum design heat input and/or maximum horsepower rating: NA	**Type and Btu/hr rating of burners:** NA

List the primary fuel type(s) and if applicable, the secondary fuel type(s). For each fuel type listed, provide the maximum hourly and annual fuel usage for each.
NA

Describe each fuel expected to be used during the term of the permit.

Fuel Type	Max. Sulfur Content	Max. Ash Content	BTU Value
NA	NA	NA	NA

Emissions Data		
Criteria Pollutants	Potential Emissions	
	PPH	TPY
Carbon Monoxide (CO)	NA	NA
Nitrogen Oxides (NO_X)	NA	NA
Lead (Pb)	NA	NA
Particulate Matter ($PM_{2.5}$)	NA	NA
Particulate Matter (PM_{10})	NA	NA
Total Particulate Matter (TSP)	NA	NA
Sulfur Dioxide (SO_2)	NA	NA
Volatile Organic Compounds (VOC)	0.01	0.02
Hazardous Air Pollutants	Potential Emissions	
	PPH	TPY
Ethylene Glycol	0.01	0.02
Regulated Pollutants other than Criteria and HAP	Potential Emissions	
	PPH	TPY
NA	NA	NA

List the method(s) used to calculate the potential emissions (include dates of any stack tests conducted, versions of software used, source and dates of emission factors, etc.).

Engineering Estimate

Applicable Requirements
List all applicable requirements for this emission unit. For each applicable requirement, include the underlying rule/regulation citation and/or <u>construction permit</u> with the condition number. (*Note: Title V permit condition numbers alone are not the underlying applicable requirements*). If an emission limit is calculated based on the type of source and design capacity or if a standard is based on a design parameter, this information should also be included. **40CFR §63.1316(b)(2)(i); 40CFR §63.1316(b)(2)(i)(A); R13-1650K §4.1.15:** • Organic HAP emissions from all continuous process vents associated with polymerization reactor sections ≤ 0.02 kg organic HAP per Mg of product.
<u>X</u> Permit Shield
For all applicable requirements listed above, provide monitoring/testing/recordkeeping/reporting which shall be used to demonstrate compliance. If the method is based on a permit or rule, include the condition number or citation. (Note: Each requirement listed above must have an associated method of demonstrating compliance. If there is not already a required method in place, then a method must be proposed.) *Monitoring:* • Control device comply with applicable provisions of 40CFR §63.114.
Are you in compliance with all applicable requirements for this emission unit? <u>X</u> Yes ___No If no, complete the **Schedule of Compliance Form** as **ATTACHMENT F**.

ATTACHMENT E - Emission Unit Form

Emission Unit Description

Emission unit ID number:	**Emission unit name:**	**List any control devices associated with this emission unit:**
C4S-F-3010	CP-3 Recycle Surge Bin	C4S-M-3130

Provide a description of the emission unit (type, method of operation, design parameters, etc.):
CP-3 Recycle Surge Bin

Manufacturer:	**Model number:**	**Serial number:**
NA	NA	NA
Construction date:	**Installation date:**	**Modification date(s):**
NA	1994	NA

Design Capacity (examples: furnaces - tons/hr, tanks - gallons):
1,170 ft^3

Maximum Hourly Throughput:	**Maximum Annual Throughput:**	**Maximum Operating Schedule:**
28,430 lb/hr	2,994 tpy	8,760 hr/yr

Fuel Usage Data **(fill out all applicable fields)**

Does this emission unit combust fuel? ___ Yes X No	**If yes, is it?** ___ Indirect Fired ___Direct Fired
Maximum design heat input and/or maximum horsepower rating: NA	**Type and Btu/hr rating of burners:** NA

List the primary fuel type(s) and if applicable, the secondary fuel type(s). For each fuel type listed, provide the maximum hourly and annual fuel usage for each.
NA

Describe each fuel expected to be used during the term of the permit.

Fuel Type	Max. Sulfur Content	Max. Ash Content	BTU Value
NA	NA	NA	NA

Emissions Data		
Criteria Pollutants	Potential Emissions	
	PPH	TPY
Carbon Monoxide (CO)	NA	NA
Nitrogen Oxides (NO_X)	NA	NA
Lead (Pb)	NA	NA
Particulate Matter ($PM_{2.5}$)	NA	NA
Particulate Matter (PM_{10})	0.09	0.01
Total Particulate Matter (TSP)	0.09	0.01
Sulfur Dioxide (SO_2)	NA	NA
Volatile Organic Compounds (VOC)	NA	NA
Hazardous Air Pollutants	Potential Emissions	
	PPH	TPY
NA	NA	NA
Regulated Pollutants other than Criteria and HAP	Potential Emissions	
	PPH	TPY
NA	NA	NA

List the method(s) used to calculate the potential emissions (include dates of any stack tests conducted, versions of software used, source and dates of emission factors, etc.).

Engineering Estimate

Applicable Requirements
List all applicable requirements for this emission unit. For each applicable requirement, include the underlying rule/regulation citation and/or construction permit with the condition number. (*Note: Title V permit condition numbers alone are not the underlying applicable requirements*). If an emission limit is calculated based on the type of source and design capacity or if a standard is based on a design parameter, this information should also be included. NA
X Permit Shield
For all applicable requirements listed above, provide monitoring/testing/recordkeeping/reporting which shall be used to demonstrate compliance. If the method is based on a permit or rule, include the condition number or citation. (Note: Each requirement listed above must have an associated method of demonstrating compliance. If there is not already a required method in place, then a method must be proposed.) NA
Are you in compliance with all applicable requirements for this emission unit? X Yes ___No If no, complete the **Schedule of Compliance Form** as **ATTACHMENT F**.

ATTACHMENT E - Emission Unit Form

Emission Unit Description

Emission unit ID number:	**Emission unit name:**	**List any control devices associated with this emission unit:**
C3T-F-1900	CP-3 Refrigerant Surge Tank	NA

Provide a description of the emission unit (type, method of operation, design parameters, etc.):
CP-3 Refrigerant Surge Tank

Manufacturer:	**Model number:**	**Serial number:**
NA	NA	NA
Construction date:	**Installation date:**	**Modification date(s):**
NA	1994	NA

Design Capacity (examples: furnaces - tons/hr, tanks - gallons):
955 gallons

Maximum Hourly Throughput:	**Maximum Annual Throughput:**	**Maximum Operating Schedule:**
59,400 gph	520 mmgpy	8,760 hr/yr

Fuel Usage Data **(fill out all applicable fields)**

Does this emission unit combust fuel? ___ Yes X No	**If yes, is it?** ___ Indirect Fired ___Direct Fired
Maximum design heat input and/or maximum horsepower rating: NA	**Type and Btu/hr rating of burners:** NA

List the primary fuel type(s) and if applicable, the secondary fuel type(s). For each fuel type listed, provide the maximum hourly and annual fuel usage for each.
NA

Describe each fuel expected to be used during the term of the permit.

Fuel Type	Max. Sulfur Content	Max. Ash Content	BTU Value
NA	NA	NA	NA

Emissions Data		
Criteria Pollutants	Potential Emissions	
	PPH	TPY
Carbon Monoxide (CO)	NA	NA
Nitrogen Oxides (NO_X)	NA	NA
Lead (Pb)	NA	NA
Particulate Matter ($PM_{2.5}$)	NA	NA
Particulate Matter (PM_{10})	NA	NA
Total Particulate Matter (TSP)	NA	NA
Sulfur Dioxide (SO_2)	NA	NA
Volatile Organic Compounds (VOC)	0.01	<0.001
Hazardous Air Pollutants	Potential Emissions	
	PPH	TPY
NA	NA	NA
Regulated Pollutants other than Criteria and HAP	Potential Emissions	
	PPH	TPY
NA	NA	NA

List the method(s) used to calculate the potential emissions (include dates of any stack tests conducted, versions of software used, source and dates of emission factors, etc.).

Engineering Estimate

Applicable Requirements
List all applicable requirements for this emission unit. For each applicable requirement, include the underlying rule/regulation citation and/or construction permit with the condition number. (*Note: Title V permit condition numbers alone are not the underlying applicable requirements*). If an emission limit is calculated based on the type of source and design capacity or if a standard is based on a design parameter, this information should also be included. NA
X Permit Shield
For all applicable requirements listed above, provide monitoring/testing/recordkeeping/reporting which shall be used to demonstrate compliance. If the method is based on a permit or rule, include the condition number or citation. (Note: Each requirement listed above must have an associated method of demonstrating compliance. If there is not already a required method in place, then a method must be proposed.) NA
Are you in compliance with all applicable requirements for this emission unit? X Yes ___No If no, complete the **Schedule of Compliance Form** as **ATTACHMENT F**.

ATTACHMENT E - Emission Unit Form

Emission Unit Description

Emission unit ID number:	**Emission unit name:**	**List any control devices associated with this emission unit:**
C3H-F-4020	CP-3 Seal Pot	C3T-B-1600

Provide a description of the emission unit (type, method of operation, design parameters, etc.):
CP-3 Seal Pot

Manufacturer:	**Model number:**	**Serial number:**
NA	NA	NA
Construction date:	**Installation date:**	**Modification date(s):**
NA	1994	NA

Design Capacity (examples: furnaces - tons/hr, tanks - gallons):
NA

Maximum Hourly Throughput:	**Maximum Annual Throughput:**	**Maximum Operating Schedule:**
5.6 lb/hr	24.6 tpy	8,760 hr/yr

Fuel Usage Data **(fill out all applicable fields)**

Does this emission unit combust fuel? ___ Yes X No	**If yes, is it?** ___ Indirect Fired ___Direct Fired
Maximum design heat input and/or maximum horsepower rating: NA	**Type and Btu/hr rating of burners:** NA

List the primary fuel type(s) and if applicable, the secondary fuel type(s). For each fuel type listed, provide the maximum hourly and annual fuel usage for each.
NA

Describe each fuel expected to be used during the term of the permit.

Fuel Type	Max. Sulfur Content	Max. Ash Content	BTU Value
NA	NA	NA	NA

Emissions Data		
Criteria Pollutants	Potential Emissions	
	PPH	TPY
Carbon Monoxide (CO)	See emissions from Hot Oil Heater C3T-B-1600.	
Nitrogen Oxides (NO_X)		
Lead (Pb)		
Particulate Matter ($PM_{2.5}$)		
Particulate Matter (PM_{10})		
Total Particulate Matter (TSP)		
Sulfur Dioxide (SO_2)		
Volatile Organic Compounds (VOC)		
Hazardous Air Pollutants	Potential Emissions	
	PPH	TPY
See emissions from Hot Oil Heater C3T-B-1600.		
Regulated Pollutants other than Criteria and HAP	Potential Emissions	
	PPH	TPY
NA	NA	NA

List the method(s) used to calculate the potential emissions (include dates of any stack tests conducted, versions of software used, source and dates of emission factors, etc.).

Engineering Estimate

Applicable Requirements
List all applicable requirements for this emission unit. For each applicable requirement, include the underlying rule/regulation citation and/or construction permit with the condition number. (*Note: Title V permit condition numbers alone are not the underlying applicable requirements*). If an emission limit is calculated based on the type of source and design capacity or if a standard is based on a design parameter, this information should also be included. NA
X Permit Shield
For all applicable requirements listed above, provide monitoring/testing/recordkeeping/reporting which shall be used to demonstrate compliance. If the method is based on a permit or rule, include the condition number or citation. (Note: Each requirement listed above must have an associated method of demonstrating compliance. If there is not already a required method in place, then a method must be proposed.) NA
Are you in compliance with all applicable requirements for this emission unit? X Yes ___No If no, complete the **Schedule of Compliance Form** as **ATTACHMENT F**.

ATTACHMENT E - Emission Unit Form

Emission Unit Description

Emission unit ID number:	**Emission unit name:**	**List any control devices associated with this emission unit:**
C3H-F-4010	CP-3 Slurry Feed Tank	C3T-B-1600

Provide a description of the emission unit (type, method of operation, design parameters, etc.):
CP-3 Slurry Feed Tank

Manufacturer:	**Model number:**	**Serial number:**
NA	NA	NA
Construction date:	**Installation date:**	**Modification date(s):**
NA	2001	NA

Design Capacity (examples: furnaces - tons/hr, tanks - gallons):
1,319 ft^3

Maximum Hourly Throughput:	**Maximum Annual Throughput:**	**Maximum Operating Schedule:**
70,000 lb/hr	306,600 tpy	8,760 hr/yr

Fuel Usage Data **(fill out all applicable fields)**

Does this emission unit combust fuel? ___ Yes X No	**If yes, is it?** ___ Indirect Fired ___Direct Fired
Maximum design heat input and/or maximum horsepower rating: NA	**Type and Btu/hr rating of burners:** NA

List the primary fuel type(s) and if applicable, the secondary fuel type(s). For each fuel type listed, provide the maximum hourly and annual fuel usage for each.
NA

Describe each fuel expected to be used during the term of the permit.

Fuel Type	Max. Sulfur Content	Max. Ash Content	BTU Value
NA	NA	NA	NA

Emissions Data		
Criteria Pollutants	Potential Emissions	
	PPH	TPY
Carbon Monoxide (CO)	See emissions from Hot Oil Heater C3T-B-1600.	
Nitrogen Oxides (NO_X)		
Lead (Pb)		
Particulate Matter ($PM_{2.5}$)		
Particulate Matter (PM_{10})		
Total Particulate Matter (TSP)		
Sulfur Dioxide (SO_2)		
Volatile Organic Compounds (VOC)		
Hazardous Air Pollutants	Potential Emissions	
	PPH	TPY
See emissions from Hot Oil Heater C3T-B-1600.		
Regulated Pollutants other than Criteria and HAP	Potential Emissions	
	PPH	TPY
NA	NA	NA

List the method(s) used to calculate the potential emissions (include dates of any stack tests conducted, versions of software used, source and dates of emission factors, etc.).

Engineering Estimate

Applicable Requirements

List all applicable requirements for this emission unit. For each applicable requirement, include the underlying rule/regulation citation and/or construction permit with the condition number. (*Note: Title V permit condition numbers alone are not the underlying applicable requirements*). If an emission limit is calculated based on the type of source and design capacity or if a standard is based on a design parameter, this information should also be included.

40CFR §63.1316(b)(2)(i); 40CFR §63.1316(b)(2)(i)(A); R13-1650K §4.1.15:

- Organic HAP emissions from all continuous process vents associated with esterification vessels ≤ 0.04 kg organic HAP per Mg of product.

X Permit Shield

For all applicable requirements listed above, provide monitoring/testing/recordkeeping/reporting which shall be used to demonstrate compliance. If the method is based on a permit or rule, include the condition number or citation. (Note: Each requirement listed above must have an associated method of demonstrating compliance. If there is not already a required method in place, then a method must be proposed.)

Monitoring:

- Control device comply with applicable provisions of 40CFR §63.114.

Are you in compliance with all applicable requirements for this emission unit? X Yes ___No

If no, complete the **Schedule of Compliance Form** as **ATTACHMENT F**.

ATTACHMENT E - Emission Unit Form

Emission Unit Description

Emission unit ID number:	**Emission unit name:**	**List any control devices associated with this emission unit:**
C3H-F-3010	CP-3 Slurry Mix Tank	C3T-B-1600

Provide a description of the emission unit (type, method of operation, design parameters, etc.):
CP-3 Slurry Mix Tank

Manufacturer:	**Model number:**	**Serial number:**
NA	NA	NA
Construction date:	**Installation date:**	**Modification date(s):**
NA	2001	NA

Design Capacity (examples: furnaces - tons/hr, tanks - gallons):
607 ft^3

Maximum Hourly Throughput:	**Maximum Annual Throughput:**	**Maximum Operating Schedule:**
70,000 lb/hr	306,600 tpy	8,760 hr/yr

Fuel Usage Data **(fill out all applicable fields)**

Does this emission unit combust fuel? ___ Yes X No	**If yes, is it?** ___ Indirect Fired ___Direct Fired
Maximum design heat input and/or maximum horsepower rating: NA	**Type and Btu/hr rating of burners:** NA

List the primary fuel type(s) and if applicable, the secondary fuel type(s). For each fuel type listed, provide the maximum hourly and annual fuel usage for each.
NA

Describe each fuel expected to be used during the term of the permit.

Fuel Type	Max. Sulfur Content	Max. Ash Content	BTU Value
NA	NA	NA	NA

Emissions Data		
Criteria Pollutants	Potential Emissions	
	PPH	TPY
Carbon Monoxide (CO)	See emissions from Hot Oil Heater C3T-B-1600.	
Nitrogen Oxides (NO_X)		
Lead (Pb)		
Particulate Matter ($PM_{2.5}$)		
Particulate Matter (PM_{10})		
Total Particulate Matter (TSP)		
Sulfur Dioxide (SO_2)		
Volatile Organic Compounds (VOC)		
Hazardous Air Pollutants	Potential Emissions	
	PPH	TPY
See emissions from Hot Oil Heater C3T-B-1600.		
Regulated Pollutants other than Criteria and HAP	Potential Emissions	
	PPH	TPY
NA	NA	NA

List the method(s) used to calculate the potential emissions (include dates of any stack tests conducted, versions of software used, source and dates of emission factors, etc.).

Engineering Estimate

Applicable Requirements
List all applicable requirements for this emission unit. For each applicable requirement, include the underlying rule/regulation citation and/or construction permit with the condition number. (*Note: Title V permit condition numbers alone are not the underlying applicable requirements*). If an emission limit is calculated based on the type of source and design capacity or if a standard is based on a design parameter, this information should also be included. NA
X Permit Shield
For all applicable requirements listed above, provide monitoring/testing/recordkeeping/reporting which shall be used to demonstrate compliance. If the method is based on a permit or rule, include the condition number or citation. (Note: Each requirement listed above must have an associated method of demonstrating compliance. If there is not already a required method in place, then a method must be proposed.) NA
Are you in compliance with all applicable requirements for this emission unit? X Yes ___No If no, complete the **Schedule of Compliance Form** as **ATTACHMENT F**.

ATTACHMENT E - Emission Unit Form

Emission Unit Description

Emission unit ID number:	**Emission unit name:**	**List any control devices associated with this emission unit:**
C3L-F-3160	CP-3 Stabilizer Charge Tank	C3T-B-1600

Provide a description of the emission unit (type, method of operation, design parameters, etc.):
CP-3 Stabilizer Charge Tank

Manufacturer:	**Model number:**	**Serial number:**
NA	NA	NA
Construction date:	**Installation date:**	**Modification date(s):**
NA	1994	NA

Design Capacity (examples: furnaces - tons/hr, tanks - gallons):
275 gallons

Maximum Hourly Throughput:	**Maximum Annual Throughput:**	**Maximum Operating Schedule:**
NA	NA	8,760 hr/yr

Fuel Usage Data **(fill out all applicable fields)**

Does this emission unit combust fuel? ___ Yes X No	**If yes, is it?** ___ Indirect Fired ___Direct Fired
Maximum design heat input and/or maximum horsepower rating: NA	**Type and Btu/hr rating of burners:** NA

List the primary fuel type(s) and if applicable, the secondary fuel type(s). For each fuel type listed, provide the maximum hourly and annual fuel usage for each.
NA

Describe each fuel expected to be used during the term of the permit.

Fuel Type	Max. Sulfur Content	Max. Ash Content	BTU Value
NA	NA	NA	NA

Emissions Data		
Criteria Pollutants	Potential Emissions	
	PPH	TPY
Carbon Monoxide (CO)	See emissions from Hot Oil Heater C3T-B-1600.	
Nitrogen Oxides (NO_X)		
Lead (Pb)		
Particulate Matter ($PM_{2.5}$)		
Particulate Matter (PM_{10})		
Total Particulate Matter (TSP)		
Sulfur Dioxide (SO_2)		
Volatile Organic Compounds (VOC)		
Hazardous Air Pollutants	Potential Emissions	
	PPH	TPY
See emissions from Hot Oil Heater C3T-B-1600.		
Regulated Pollutants other than Criteria and HAP	Potential Emissions	
	PPH	TPY
NA	NA	NA

List the method(s) used to calculate the potential emissions (include dates of any stack tests conducted, versions of software used, source and dates of emission factors, etc.).

Engineering Estimate

Applicable Requirements

List all applicable requirements for this emission unit. For each applicable requirement, include the underlying rule/regulation citation and/or construction permit with the condition number. (*Note: Title V permit condition numbers alone are not the underlying applicable requirements*). If an emission limit is calculated based on the type of source and design capacity or if a standard is based on a design parameter, this information should also be included.

40CFR §63.1316(b)(2)(i); 40CFR §63.1316(b)(2)(i)(A); R13-1650K §4.1.15:

- Organic HAP emissions from all continuous process vents associated with esterification vessels ≤ 0.04 kg organic HAP per Mg of product.

X Permit Shield

For all applicable requirements listed above, provide monitoring/testing/recordkeeping/reporting which shall be used to demonstrate compliance. If the method is based on a permit or rule, include the condition number or citation. (Note: Each requirement listed above must have an associated method of demonstrating compliance. If there is not already a required method in place, then a method must be proposed.)

Monitoring:

- Control device comply with applicable provisions of 40CFR §63.114.

Are you in compliance with all applicable requirements for this emission unit? X Yes ___No

If no, complete the **Schedule of Compliance Form** as **ATTACHMENT F**.

ATTACHMENT E - Emission Unit Form

Emission Unit Description

Emission unit ID number:	**Emission unit name:**	**List any control devices associated with this emission unit:**
C3L-F-7010	CP-3 & CP-4 Catalyst Feed Tank	NA

Provide a description of the emission unit (type, method of operation, design parameters, etc.):
CP-3 & CP-4 Catalyst Feed Tank

Manufacturer:	**Model number:**	**Serial number:**
NA	NA	NA
Construction date:	**Installation date:**	**Modification date(s):**
NA	2001	NA

Design Capacity (examples: furnaces - tons/hr, tanks - gallons):
455 ft^3

Maximum Hourly Throughput:	**Maximum Annual Throughput:**	**Maximum Operating Schedule:**
1,400 gph	3.2 mmgal/yr	8,760 hr/yr

Fuel Usage Data **(fill out all applicable fields)**

Does this emission unit combust fuel? ___ Yes X No	**If yes, is it?** ___ Indirect Fired ___Direct Fired
Maximum design heat input and/or maximum horsepower rating: NA	**Type and Btu/hr rating of burners:** NA

List the primary fuel type(s) and if applicable, the secondary fuel type(s). For each fuel type listed, provide the maximum hourly and annual fuel usage for each.
NA

Describe each fuel expected to be used during the term of the permit.

Fuel Type	Max. Sulfur Content	Max. Ash Content	BTU Value
NA	NA	NA	NA

Emissions Data		
Criteria Pollutants	Potential Emissions	
	PPH	TPY
Carbon Monoxide (CO)	See emissions from Seal Pot C3L-F-7020.	
Nitrogen Oxides (NO_X)		
Lead (Pb)		
Particulate Matter ($PM_{2.5}$)		
Particulate Matter (PM_{10})		
Total Particulate Matter (TSP)		
Sulfur Dioxide (SO_2)		
Volatile Organic Compounds (VOC)		
Hazardous Air Pollutants	Potential Emissions	
	PPH	TPY
See emissions from Seal Pot C3L-F-7020.		
Regulated Pollutants other than Criteria and HAP	Potential Emissions	
	PPH	TPY
NA	NA	NA

List the method(s) used to calculate the potential emissions (include dates of any stack tests conducted, versions of software used, source and dates of emission factors, etc.).

Engineering Estimate

Applicable Requirements

List all applicable requirements for this emission unit. For each applicable requirement, include the underlying rule/regulation citation and/or construction permit with the condition number. (*Note: Title V permit condition numbers alone are not the underlying applicable requirements*). If an emission limit is calculated based on the type of source and design capacity or if a standard is based on a design parameter, this information should also be included.

40CFR §63.1316(b)(2)(i); 40CFR §63.1316(b)(2)(i)(A); R13-1650K §4.1.15:

- Organic HAP emissions from all continuous process vents associated with esterification vessels ≤ 0.04 kg organic HAP per Mg of product.

X Permit Shield

For all applicable requirements listed above, provide monitoring/testing/recordkeeping/reporting which shall be used to demonstrate compliance. If the method is based on a permit or rule, include the condition number or citation. (Note: Each requirement listed above must have an associated method of demonstrating compliance. If there is not already a required method in place, then a method must be proposed.)

Monitoring:

- Control device comply with applicable provisions of 40CFR §63.114.

Are you in compliance with all applicable requirements for this emission unit? X Yes ___No

If no, complete the **Schedule of Compliance Form** as **ATTACHMENT F**.

ATTACHMENT E - Emission Unit Form

Emission Unit Description

Emission unit ID number:	**Emission unit name:**	**List any control devices associated with this emission unit:**
C3L-F-6010	CP-3 & CP-4 Catalyst Mix Tank	NA

Provide a description of the emission unit (type, method of operation, design parameters, etc.):
CP-3 & CP-4 Catalyst Mix Tank

Manufacturer:	**Model number:**	**Serial number:**
NA	NA	NA
Construction date:	**Installation date:**	**Modification date(s):**
NA	2001	NA

Design Capacity (examples: furnaces - tons/hr, tanks - gallons):
455 ft^3

Maximum Hourly Throughput:	**Maximum Annual Throughput:**	**Maximum Operating Schedule:**
3,930 gal/batch	12.6 mmgal/yr	8,760 hr/yr

Fuel Usage Data **(fill out all applicable fields)**

Does this emission unit combust fuel? ___ Yes X No	**If yes, is it?** ___ Indirect Fired ___Direct Fired
Maximum design heat input and/or maximum horsepower rating: NA	**Type and Btu/hr rating of burners:** NA

List the primary fuel type(s) and if applicable, the secondary fuel type(s). For each fuel type listed, provide the maximum hourly and annual fuel usage for each.
NA

Describe each fuel expected to be used during the term of the permit.

Fuel Type	Max. Sulfur Content	Max. Ash Content	BTU Value
NA	NA	NA	NA

Emissions Data		
Criteria Pollutants	Potential Emissions	
	PPH	TPY
Carbon Monoxide (CO)	See emissions from Seal Pot C3L-F-7020.	
Nitrogen Oxides (NO_X)		
Lead (Pb)		
Particulate Matter ($PM_{2.5}$)		
Particulate Matter (PM_{10})		
Total Particulate Matter (TSP)		
Sulfur Dioxide (SO_2)		
Volatile Organic Compounds (VOC)		
Hazardous Air Pollutants	Potential Emissions	
	PPH	TPY
See emissions from Seal Pot C3L-F-7020.		
Regulated Pollutants other than Criteria and HAP	Potential Emissions	
	PPH	TPY
NA	NA	NA

List the method(s) used to calculate the potential emissions (include dates of any stack tests conducted, versions of software used, source and dates of emission factors, etc.).

Engineering Estimate

Applicable Requirements

List all applicable requirements for this emission unit. For each applicable requirement, include the underlying rule/regulation citation and/or construction permit with the condition number. (*Note: Title V permit condition numbers alone are not the underlying applicable requirements*). If an emission limit is calculated based on the type of source and design capacity or if a standard is based on a design parameter, this information should also be included.

40CFR §63.1316(b)(2)(i); 40CFR §63.1316(b)(2)(i)(A); R13-1650K §4.1.15:

- Organic HAP emissions from all continuous process vents associated with esterification vessels ≤ 0.04 kg organic HAP per Mg of product.

X Permit Shield

For all applicable requirements listed above, provide monitoring/testing/recordkeeping/reporting which shall be used to demonstrate compliance. If the method is based on a permit or rule, include the condition number or citation. (Note: Each requirement listed above must have an associated method of demonstrating compliance. If there is not already a required method in place, then a method must be proposed.)

Monitoring:

- Control device comply with applicable provisions of 40CFR §63.114.

Are you in compliance with all applicable requirements for this emission unit? X Yes ___No

If no, complete the **Schedule of Compliance Form** as **ATTACHMENT F**.

ATTACHMENT E - Emission Unit Form

Emission Unit Description

Emission unit ID number:	**Emission unit name:**	**List any control devices associated with this emission unit:**
D-155	CP-3 & CP-4 MACT Tank	NA

Provide a description of the emission unit (type, method of operation, design parameters, etc.):
CP-3 & CP-4 MACT Tank

Manufacturer:	**Model number:**	**Serial number:**
NA	NA	NA
Construction date:	**Installation date:**	**Modification date(s):**
NA	1994	NA

Design Capacity (examples: furnaces - tons/hr, tanks - gallons):
10,000 gallons

Maximum Hourly Throughput:	**Maximum Annual Throughput:**	**Maximum Operating Schedule:**
15,300 lb/hr	67,014 tpy	8,760 hr/yr

Fuel Usage Data **(fill out all applicable fields)**

Does this emission unit combust fuel? ___ Yes X No	**If yes, is it?** ___ Indirect Fired ___Direct Fired
Maximum design heat input and/or maximum horsepower rating: NA	**Type and Btu/hr rating of burners:** NA

List the primary fuel type(s) and if applicable, the secondary fuel type(s). For each fuel type listed, provide the maximum hourly and annual fuel usage for each.
NA

Describe each fuel expected to be used during the term of the permit.

Fuel Type	Max. Sulfur Content	Max. Ash Content	BTU Value
NA	NA	NA	NA

Emissions Data		
Criteria Pollutants	Potential Emissions	
	PPH	TPY
Carbon Monoxide (CO)	NA	NA
Nitrogen Oxides (NO_X)	NA	NA
Lead (Pb)	NA	NA
Particulate Matter ($PM_{2.5}$)	NA	NA
Particulate Matter (PM_{10})	NA	NA
Total Particulate Matter (TSP)	NA	NA
Sulfur Dioxide (SO_2)	NA	NA
Volatile Organic Compounds (VOC)	<0.001	<0.001
Hazardous Air Pollutants	Potential Emissions	
	PPH	TPY
Ethylene Glycol	<0.001	<0.001
Acetaldehyde	<0.001	<0.001
Regulated Pollutants other than Criteria and HAP	Potential Emissions	
	PPH	TPY
NA	NA	NA

List the method(s) used to calculate the potential emissions (include dates of any stack tests conducted, versions of software used, source and dates of emission factors, etc.).

Engineering Estimate

Applicable Requirements
List all applicable requirements for this emission unit. For each applicable requirement, include the underlying rule/regulation citation and/or <u>construction permit</u> with the condition number. (*Note: Title V permit condition numbers alone are not the underlying applicable requirements*). If an emission limit is calculated based on the type of source and design capacity or if a standard is based on a design parameter, this information should also be included. NA
<u>X</u> Permit Shield
For all applicable requirements listed above, provide monitoring/testing/recordkeeping/reporting which shall be used to demonstrate compliance. If the method is based on a permit or rule, include the condition number or citation. (Note: Each requirement listed above must have an associated method of demonstrating compliance. If there is not already a required method in place, then a method must be proposed.) NA
Are you in compliance with all applicable requirements for this emission unit? <u>X</u> Yes ___No If no, complete the **Schedule of Compliance Form** as **ATTACHMENT F**.

ATTACHMENT E - Emission Unit Form

Emission Unit Description

Emission unit ID number:	**Emission unit name:**	**List any control devices associated with this emission unit:**
C3L-F-4210	CP-3 & CP-4 Stabilizer Make-Up Tank	C3T-B-1600

Provide a description of the emission unit (type, method of operation, design parameters, etc.):
CP-3 & CP-4Stabilizer Make-Up Tank

Manufacturer:	**Model number:**	**Serial number:**
NA	NA	NA
Construction date:	**Installation date:**	**Modification date(s):**
NA	1994	NA

Design Capacity (examples: furnaces - tons/hr, tanks - gallons):
400 gallons

Maximum Hourly Throughput:	**Maximum Annual Throughput:**	**Maximum Operating Schedule:**
NA	NA	8,760 hr/yr

Fuel Usage Data **(fill out all applicable fields)**

Does this emission unit combust fuel? ___ Yes X No	**If yes, is it?** ___ Indirect Fired ___Direct Fired
Maximum design heat input and/or maximum horsepower rating: NA	**Type and Btu/hr rating of burners:** NA

List the primary fuel type(s) and if applicable, the secondary fuel type(s). For each fuel type listed, provide the maximum hourly and annual fuel usage for each.
NA

Describe each fuel expected to be used during the term of the permit.

Fuel Type	Max. Sulfur Content	Max. Ash Content	BTU Value
NA	NA	NA	NA

Emissions Data		
Criteria Pollutants	Potential Emissions	
	PPH	TPY
Carbon Monoxide (CO)	See emissions from Hot Oil Heater C3T-B-1600.	
Nitrogen Oxides (NO_X)		
Lead (Pb)		
Particulate Matter ($PM_{2.5}$)		
Particulate Matter (PM_{10})		
Total Particulate Matter (TSP)		
Sulfur Dioxide (SO_2)		
Volatile Organic Compounds (VOC)		
Hazardous Air Pollutants	Potential Emissions	
	PPH	TPY
See emissions from Hot Oil Heater C3T-B-1600.		
Regulated Pollutants other than Criteria and HAP	Potential Emissions	
	PPH	TPY
NA	NA	NA

List the method(s) used to calculate the potential emissions (include dates of any stack tests conducted, versions of software used, source and dates of emission factors, etc.).

Engineering Estimate

Applicable Requirements

List all applicable requirements for this emission unit. For each applicable requirement, include the underlying rule/regulation citation and/or construction permit with the condition number. (*Note: Title V permit condition numbers alone are not the underlying applicable requirements*). If an emission limit is calculated based on the type of source and design capacity or if a standard is based on a design parameter, this information should also be included.

40CFR §63.1316(b)(2)(i); 40CFR §63.1316(b)(2)(i)(A); R13-1650K §4.1.15:

- Organic HAP emissions from all continuous process vents associated with esterification vessels ≤ 0.04 kg organic HAP per Mg of product.

X Permit Shield

For all applicable requirements listed above, provide monitoring/testing/recordkeeping/reporting which shall be used to demonstrate compliance. If the method is based on a permit or rule, include the condition number or citation. (Note: Each requirement listed above must have an associated method of demonstrating compliance. If there is not already a required method in place, then a method must be proposed.)

Monitoring:

- Control device comply with applicable provisions of 40CFR §63.114.

Are you in compliance with all applicable requirements for this emission unit? X Yes ___No

If no, complete the **Schedule of Compliance Form** as **ATTACHMENT F**.

ATTACHMENT E - Emission Unit Form

Emission Unit Description

Emission unit ID number:	**Emission unit name:**	**List any control devices associated with this emission unit:**
C3L-F-4211	CP-3 & CP-4 Stabilizer Make-Up Tank	C3T-B-1600

Provide a description of the emission unit (type, method of operation, design parameters, etc.):
CP-3 & CP-4 Stabilizer Make-Up Tank

Manufacturer:	**Model number:**	**Serial number:**
NA	NA	NA
Construction date:	**Installation date:**	**Modification date(s):**
NA	1994	NA

Design Capacity (examples: furnaces - tons/hr, tanks - gallons):
400 gallons

Maximum Hourly Throughput:	**Maximum Annual Throughput:**	**Maximum Operating Schedule:**
NA	NA	8,760 hr/yr

Fuel Usage Data **(fill out all applicable fields)**

Does this emission unit combust fuel? ___ Yes X No	**If yes, is it?** ___ Indirect Fired ___Direct Fired
Maximum design heat input and/or maximum horsepower rating: NA	**Type and Btu/hr rating of burners:** NA

List the primary fuel type(s) and if applicable, the secondary fuel type(s). For each fuel type listed, provide the maximum hourly and annual fuel usage for each.
NA

Describe each fuel expected to be used during the term of the permit.

Fuel Type	Max. Sulfur Content	Max. Ash Content	BTU Value
NA	NA	NA	NA

Emissions Data		
Criteria Pollutants	Potential Emissions	
	PPH	TPY
Carbon Monoxide (CO)	See emissions from Hot Oil Heater C3T-B-1600.	
Nitrogen Oxides (NO_X)		
Lead (Pb)		
Particulate Matter ($PM_{2.5}$)		
Particulate Matter (PM_{10})		
Total Particulate Matter (TSP)		
Sulfur Dioxide (SO_2)		
Volatile Organic Compounds (VOC)		
Hazardous Air Pollutants	Potential Emissions	
	PPH	TPY
See emissions from Hot Oil Heater C3T-B-1600.		
Regulated Pollutants other than Criteria and HAP	Potential Emissions	
	PPH	TPY
NA	NA	NA

List the method(s) used to calculate the potential emissions (include dates of any stack tests conducted, versions of software used, source and dates of emission factors, etc.).

Engineering Estimate

Applicable Requirements

List all applicable requirements for this emission unit. For each applicable requirement, include the underlying rule/regulation citation and/or construction permit with the condition number. (*Note: Title V permit condition numbers alone are not the underlying applicable requirements*). If an emission limit is calculated based on the type of source and design capacity or if a standard is based on a design parameter, this information should also be included.

40CFR §63.1316(b)(2)(i); 40CFR §63.1316(b)(2)(i)(A); R13-1650K §4.1.15:

- Organic HAP emissions from all continuous process vents associated with esterification vessels ≤ 0.04 kg organic HAP per Mg of product.

X Permit Shield

For all applicable requirements listed above, provide monitoring/testing/recordkeeping/reporting which shall be used to demonstrate compliance. If the method is based on a permit or rule, include the condition number or citation. (Note: Each requirement listed above must have an associated method of demonstrating compliance. If there is not already a required method in place, then a method must be proposed.)

Monitoring:

- Control device comply with applicable provisions of 40CFR §63.114.

Are you in compliance with all applicable requirements for this emission unit? X Yes ___No

If no, complete the **Schedule of Compliance Form** as **ATTACHMENT F**.

ATTACHMENT E - Emission Unit Form

Emission Unit Description

Emission unit ID number:	**Emission unit name:**	**List any control devices associated with this emission unit:**
C3L-F-5040	CP-3 & CP-4 Stabilizer Make-Up Tank	C3T-B-1600

Provide a description of the emission unit (type, method of operation, design parameters, etc.):
CP-3 & CP-4 Stabilizer Make-Up Tank

Manufacturer:	**Model number:**	**Serial number:**
NA	NA	NA
Construction date:	**Installation date:**	**Modification date(s):**
NA	1994	NA

Design Capacity (examples: furnaces - tons/hr, tanks - gallons):
486 gallons

Maximum Hourly Throughput:	**Maximum Annual Throughput:**	**Maximum Operating Schedule:**
NA	NA	8,760 hr/yr

Fuel Usage Data **(fill out all applicable fields)**

Does this emission unit combust fuel? ___ Yes X No	**If yes, is it?** ___ Indirect Fired ___Direct Fired
Maximum design heat input and/or maximum horsepower rating: NA	**Type and Btu/hr rating of burners:** NA

List the primary fuel type(s) and if applicable, the secondary fuel type(s). For each fuel type listed, provide the maximum hourly and annual fuel usage for each.
NA

Describe each fuel expected to be used during the term of the permit.

Fuel Type	Max. Sulfur Content	Max. Ash Content	BTU Value
NA	NA	NA	NA

Emissions Data		
Criteria Pollutants	Potential Emissions	
	PPH	TPY
Carbon Monoxide (CO)	See emissions from Hot Oil Heater C3T-B-1600.	
Nitrogen Oxides (NO_X)		
Lead (Pb)		
Particulate Matter ($PM_{2.5}$)		
Particulate Matter (PM_{10})		
Total Particulate Matter (TSP)		
Sulfur Dioxide (SO_2)		
Volatile Organic Compounds (VOC)		
Hazardous Air Pollutants	Potential Emissions	
	PPH	TPY
See emissions from Hot Oil Heater C3T-B-1600.		
Regulated Pollutants other than Criteria and HAP	Potential Emissions	
	PPH	TPY
NA	NA	NA

List the method(s) used to calculate the potential emissions (include dates of any stack tests conducted, versions of software used, source and dates of emission factors, etc.).

Engineering Estimate

Applicable Requirements

List all applicable requirements for this emission unit. For each applicable requirement, include the underlying rule/regulation citation and/or construction permit with the condition number. (*Note: Title V permit condition numbers alone are not the underlying applicable requirements*). If an emission limit is calculated based on the type of source and design capacity or if a standard is based on a design parameter, this information should also be included.

40CFR §63.1316(b)(2)(i); 40CFR §63.1316(b)(2)(i)(A); R13-1650K §4.1.15:

- Organic HAP emissions from all continuous process vents associated with esterification vessels ≤ 0.04 kg organic HAP per Mg of product.

X Permit Shield

For all applicable requirements listed above, provide monitoring/testing/recordkeeping/reporting which shall be used to demonstrate compliance. If the method is based on a permit or rule, include the condition number or citation. (Note: Each requirement listed above must have an associated method of demonstrating compliance. If there is not already a required method in place, then a method must be proposed.)

Monitoring:

- Control device comply with applicable provisions of 40CFR §63.114.

Are you in compliance with all applicable requirements for this emission unit? X Yes ___No

If no, complete the **Schedule of Compliance Form** as **ATTACHMENT F**.

ATTACHMENT E - Emission Unit Form

Emission Unit Description

Emission unit ID number:	**Emission unit name:**	**List any control devices associated with this emission unit:**
C3L-F-4100	CP-3 & CP-4 Stabilizer Surge Tank	C3T-B-1600

Provide a description of the emission unit (type, method of operation, design parameters, etc.):
CP-3 & CP-4 Stabilizer Surge Tank

Manufacturer:	**Model number:**	**Serial number:**
NA	NA	NA
Construction date:	**Installation date:**	**Modification date(s):**
NA	1994	NA

Design Capacity (examples: furnaces - tons/hr, tanks - gallons):
516 gallons

Maximum Hourly Throughput:	**Maximum Annual Throughput:**	**Maximum Operating Schedule:**
NA	NA	8,760 hr/yr

Fuel Usage Data **(fill out all applicable fields)**

Does this emission unit combust fuel? ___ Yes X No	**If yes, is it?** ___ Indirect Fired ___Direct Fired
Maximum design heat input and/or maximum horsepower rating: NA	**Type and Btu/hr rating of burners:** NA

List the primary fuel type(s) and if applicable, the secondary fuel type(s). For each fuel type listed, provide the maximum hourly and annual fuel usage for each.
NA

Describe each fuel expected to be used during the term of the permit.

Fuel Type	Max. Sulfur Content	Max. Ash Content	BTU Value
NA	NA	NA	NA

Emissions Data		
Criteria Pollutants	Potential Emissions	
	PPH	TPY
Carbon Monoxide (CO)	See emissions from Hot Oil Heater C3T-B-1600.	
Nitrogen Oxides (NO_X)		
Lead (Pb)		
Particulate Matter ($PM_{2.5}$)		
Particulate Matter (PM_{10})		
Total Particulate Matter (TSP)		
Sulfur Dioxide (SO_2)		
Volatile Organic Compounds (VOC)		
Hazardous Air Pollutants	Potential Emissions	
	PPH	TPY
See emissions from Hot Oil Heater C3T-B-1600.		
Regulated Pollutants other than Criteria and HAP	Potential Emissions	
	PPH	TPY
NA	NA	NA

List the method(s) used to calculate the potential emissions (include dates of any stack tests conducted, versions of software used, source and dates of emission factors, etc.).

Engineering Estimate

Applicable Requirements

List all applicable requirements for this emission unit. For each applicable requirement, include the underlying rule/regulation citation and/or construction permit with the condition number. (*Note: Title V permit condition numbers alone are not the underlying applicable requirements*). If an emission limit is calculated based on the type of source and design capacity or if a standard is based on a design parameter, this information should also be included.

40CFR §63.1316(b)(2)(i); 40CFR §63.1316(b)(2)(i)(A); R13-1650K §4.1.15:

- Organic HAP emissions from all continuous process vents associated with esterification vessels ≤ 0.04 kg organic HAP per Mg of product.

X Permit Shield

For all applicable requirements listed above, provide monitoring/testing/recordkeeping/reporting which shall be used to demonstrate compliance. If the method is based on a permit or rule, include the condition number or citation. (Note: Each requirement listed above must have an associated method of demonstrating compliance. If there is not already a required method in place, then a method must be proposed.)

Monitoring:

- Control device comply with applicable provisions of 40CFR §63.114.

Are you in compliance with all applicable requirements for this emission unit? X Yes ___No

If no, complete the **Schedule of Compliance Form** as **ATTACHMENT F**.

ATTACHMENT E - Emission Unit Form

Emission Unit Description

Emission unit ID number:	**Emission unit name:**	**List any control devices associated with this emission unit:**
C3L-F-9010	CP-3 & CP-4 Toner Charge Tank	NA

Provide a description of the emission unit (type, method of operation, design parameters, etc.):
CP-3 & CP-4 Toner Charge Tank

Manufacturer:	**Model number:**	**Serial number:**
NA	NA	NA
Construction date:	**Installation date:**	**Modification date(s):**
NA	2001	NA

Design Capacity (examples: furnaces - tons/hr, tanks - gallons):
277 ft^3

Maximum Hourly Throughput:	**Maximum Annual Throughput:**	**Maximum Operating Schedule:**
NA	NA	8,760 hr/yr

Fuel Usage Data **(fill out all applicable fields)**

Does this emission unit combust fuel? ___ Yes X No	**If yes, is it?** ___ Indirect Fired ___Direct Fired
Maximum design heat input and/or maximum horsepower rating: NA	**Type and Btu/hr rating of burners:** NA

List the primary fuel type(s) and if applicable, the secondary fuel type(s). For each fuel type listed, provide the maximum hourly and annual fuel usage for each.
NA

Describe each fuel expected to be used during the term of the permit.

Fuel Type	Max. Sulfur Content	Max. Ash Content	BTU Value
NA	NA	NA	NA

Emissions Data		
Criteria Pollutants	Potential Emissions	
	PPH	TPY
Carbon Monoxide (CO)	See emissions from Seal Pot C3L-F-7020.	
Nitrogen Oxides (NO_X)		
Lead (Pb)		
Particulate Matter ($PM_{2.5}$)		
Particulate Matter (PM_{10})		
Total Particulate Matter (TSP)		
Sulfur Dioxide (SO_2)		
Volatile Organic Compounds (VOC)		
Hazardous Air Pollutants	Potential Emissions	
	PPH	TPY
See emissions from Seal Pot C3L-F-7020.		
Regulated Pollutants other than Criteria and HAP	Potential Emissions	
	PPH	TPY
NA	NA	NA

List the method(s) used to calculate the potential emissions (include dates of any stack tests conducted, versions of software used, source and dates of emission factors, etc.).

Engineering Estimate

Applicable Requirements
List all applicable requirements for this emission unit. For each applicable requirement, include the underlying rule/regulation citation and/or construction permit with the condition number. (*Note: Title V permit condition numbers alone are not the underlying applicable requirements*). If an emission limit is calculated based on the type of source and design capacity or if a standard is based on a design parameter, this information should also be included. NA
X Permit Shield
For all applicable requirements listed above, provide monitoring/testing/recordkeeping/reporting which shall be used to demonstrate compliance. If the method is based on a permit or rule, include the condition number or citation. (Note: Each requirement listed above must have an associated method of demonstrating compliance. If there is not already a required method in place, then a method must be proposed.) NA
Are you in compliance with all applicable requirements for this emission unit? X Yes ___No If no, complete the **Schedule of Compliance Form** as **ATTACHMENT F**.

CP-4

ATTACHMENT E - Emission Unit Form

Emission Unit Description

Emission unit ID number:	**Emission unit name:**	**List any control devices associated with this emission unit:**
C44-F-2290	CP-4 R/4 Condensate Tank	C4T-B-1600

Provide a description of the emission unit (type, method of operation, design parameters, etc.):
CP-4 R/4 Condensate Tank

Manufacturer:	**Model number:**	**Serial number:**
NA	NA	NA
Construction date:	**Installation date:**	**Modification date(s):**
NA	1996	NA

Design Capacity (examples: furnaces - tons/hr, tanks - gallons):
1,660 gallons

Maximum Hourly Throughput:	**Maximum Annual Throughput:**	**Maximum Operating Schedule:**
26,520 gph	232 mmgpy	8,760 hr/yr

Fuel Usage Data **(fill out all applicable fields)**

Does this emission unit combust fuel? ___ Yes X No	**If yes, is it?** ___ Indirect Fired ___Direct Fired
Maximum design heat input and/or maximum horsepower rating: NA	**Type and Btu/hr rating of burners:** NA

List the primary fuel type(s) and if applicable, the secondary fuel type(s). For each fuel type listed, provide the maximum hourly and annual fuel usage for each.
NA

Describe each fuel expected to be used during the term of the permit.

Fuel Type	Max. Sulfur Content	Max. Ash Content	BTU Value
NA	NA	NA	NA

Emissions Data		
Criteria Pollutants	Potential Emissions	
	PPH	TPY
Carbon Monoxide (CO)	See emissions from Hot Oil Heater C4T-B-1600.	
Nitrogen Oxides (NO_X)		
Lead (Pb)		
Particulate Matter ($PM_{2.5}$)		
Particulate Matter (PM_{10})		
Total Particulate Matter (TSP)		
Sulfur Dioxide (SO_2)		
Volatile Organic Compounds (VOC)		
Hazardous Air Pollutants	Potential Emissions	
	PPH	TPY
See emissions from Hot Oil Heater C4T-B-1600.		
Regulated Pollutants other than Criteria and HAP	Potential Emissions	
	PPH	TPY
NA	NA	NA

List the method(s) used to calculate the potential emissions (include dates of any stack tests conducted, versions of software used, source and dates of emission factors, etc.).

Engineering Estimate

Applicable Requirements

List all applicable requirements for this emission unit. For each applicable requirement, include the underlying rule/regulation citation and/or construction permit with the condition number. (*Note: Title V permit condition numbers alone are not the underlying applicable requirements*). If an emission limit is calculated based on the type of source and design capacity or if a standard is based on a design parameter, this information should also be included.

40CFR §63.1316(b)(2)(i); 40CFR §63.1316(b)(2)(i)(A); R13-1650K §4.1.15:

- Organic HAP emissions from all continuous process vents associated with polymerization reactor sections ≤ 0.02 kg organic HAP per Mg of product.

X Permit Shield

For all applicable requirements listed above, provide monitoring/testing/recordkeeping/reporting which shall be used to demonstrate compliance. If the method is based on a permit or rule, include the condition number or citation. (Note: Each requirement listed above must have an associated method of demonstrating compliance. If there is not already a required method in place, then a method must be proposed.)

Monitoring:

- Control device comply with applicable provisions of 40CFR §63.114.

Are you in compliance with all applicable requirements for this emission unit? X Yes ___No

If no, complete the **Schedule of Compliance Form** as **ATTACHMENT F**.

ATTACHMENT E - Emission Unit Form

Emission Unit Description

Emission unit ID number:	**Emission unit name:**	**List any control devices associated with this emission unit:**
C4S-F-1020	CP-4 TPA Surge Silo	C4S-M-1040

Provide a description of the emission unit (type, method of operation, design parameters, etc.):
CP-4 TPA Surge Silo

Manufacturer:	**Model number:**	**Serial number:**
NA	NA	NA
Construction date:	**Installation date:**	**Modification date(s):**
NA	1996	NA

Design Capacity (examples: furnaces - tons/hr, tanks - gallons):
178 ft^3

Maximum Hourly Throughput:	**Maximum Annual Throughput:**	**Maximum Operating Schedule:**
91,350 lb/hr	382,707 tpy	8,760 hr/yr

Fuel Usage Data **(fill out all applicable fields)**

Does this emission unit combust fuel? ___ Yes X No	**If yes, is it?** ___ Indirect Fired ___Direct Fired
Maximum design heat input and/or maximum horsepower rating: NA	**Type and Btu/hr rating of burners:** NA

List the primary fuel type(s) and if applicable, the secondary fuel type(s). For each fuel type listed, provide the maximum hourly and annual fuel usage for each.
NA

Describe each fuel expected to be used during the term of the permit.

Fuel Type	Max. Sulfur Content	Max. Ash Content	BTU Value
NA	NA	NA	NA

Emissions Data		
Criteria Pollutants	Potential Emissions	
	PPH	TPY
Carbon Monoxide (CO)	NA	NA
Nitrogen Oxides (NO_X)	NA	NA
Lead (Pb)	NA	NA
Particulate Matter ($PM_{2.5}$)	NA	NA
Particulate Matter (PM_{10})	0.11	0.46
Total Particulate Matter (TSP)	0.11	0.46
Sulfur Dioxide (SO_2)	NA	NA
Volatile Organic Compounds (VOC)	NA	NA
Hazardous Air Pollutants	Potential Emissions	
	PPH	TPY
NA	NA	NA
Regulated Pollutants other than Criteria and HAP	Potential Emissions	
	PPH	TPY
NA	NA	NA

List the method(s) used to calculate the potential emissions (include dates of any stack tests conducted, versions of software used, source and dates of emission factors, etc.).

Engineering Estimate

Applicable Requirements

List all applicable requirements for this emission unit. For each applicable requirement, include the underlying rule/regulation citation and/or construction permit with the condition number. (*Note: Title V permit condition numbers alone are not the underlying applicable requirements*). If an emission limit is calculated based on the type of source and design capacity or if a standard is based on a design parameter, this information should also be included.

R13-1650K §4.1.13; 45CSR §7-3.7:

- Storage structure required to have full enclosure and equipped with PM control devices.

X Permit Shield

For all applicable requirements listed above, provide monitoring/testing/recordkeeping/reporting which shall be used to demonstrate compliance. If the method is based on a permit or rule, include the condition number or citation. (Note: Each requirement listed above must have an associated method of demonstrating compliance. If there is not already a required method in place, then a method must be proposed.)

NA

Are you in compliance with all applicable requirements for this emission unit? X Yes ___No

If no, complete the **Schedule of Compliance Form** as **ATTACHMENT F**.

ATTACHMENT E - Emission Unit Form

Emission Unit Description

Emission unit ID number:	**Emission unit name:**	**List any control devices associated with this emission unit:**
C4L-F-2120	CP-4 Catalyst Charge Tank	C4T-B-1600

Provide a description of the emission unit (type, method of operation, design parameters, etc.):
CP-4 Catalyst Charge Tank

Manufacturer:	**Model number:**	**Serial number:**
NA	NA	NA
Construction date:	**Installation date:**	**Modification date(s):**
NA	1996	NA

Design Capacity (examples: furnaces - tons/hr, tanks - gallons):
275 gallons

Maximum Hourly Throughput:	**Maximum Annual Throughput:**	**Maximum Operating Schedule:**
1,020 gph	38,485 gpy	8,760 hr/yr

Fuel Usage Data **(fill out all applicable fields)**

Does this emission unit combust fuel? ___ Yes X No	**If yes, is it?** ___ Indirect Fired ___Direct Fired
Maximum design heat input and/or maximum horsepower rating: NA	**Type and Btu/hr rating of burners:** NA

List the primary fuel type(s) and if applicable, the secondary fuel type(s). For each fuel type listed, provide the maximum hourly and annual fuel usage for each.
NA

Describe each fuel expected to be used during the term of the permit.

Fuel Type	Max. Sulfur Content	Max. Ash Content	BTU Value
NA	NA	NA	NA

Emissions Data		
Criteria Pollutants	Potential Emissions	
	PPH	TPY
Carbon Monoxide (CO)	See emissions from Hot Oil Heater C4T-B-1600.	
Nitrogen Oxides (NO_X)		
Lead (Pb)		
Particulate Matter ($PM_{2.5}$)		
Particulate Matter (PM_{10})		
Total Particulate Matter (TSP)		
Sulfur Dioxide (SO_2)		
Volatile Organic Compounds (VOC)		
Hazardous Air Pollutants	Potential Emissions	
	PPH	TPY
See emissions from Hot Oil Heater C4T-B-1600.		
Regulated Pollutants other than Criteria and HAP	Potential Emissions	
	PPH	TPY
NA	NA	NA

List the method(s) used to calculate the potential emissions (include dates of any stack tests conducted, versions of software used, source and dates of emission factors, etc.).

Engineering Estimate

Applicable Requirements

List all applicable requirements for this emission unit. For each applicable requirement, include the underlying rule/regulation citation and/or construction permit with the condition number. (*Note: Title V permit condition numbers alone are not the underlying applicable requirements*). If an emission limit is calculated based on the type of source and design capacity or if a standard is based on a design parameter, this information should also be included.

40CFR §63.1316(b)(2)(i); 40CFR §63.1316(b)(2)(i)(A); R13-1650K §4.1.15:

- Organic HAP emissions from all continuous process vents associated with esterification vessels ≤ 0.04 kg organic HAP per Mg of product.

X Permit Shield

For all applicable requirements listed above, provide monitoring/testing/recordkeeping/reporting which shall be used to demonstrate compliance. If the method is based on a permit or rule, include the condition number or citation. (Note: Each requirement listed above must have an associated method of demonstrating compliance. If there is not already a required method in place, then a method must be proposed.)

Monitoring:

- Control device comply with applicable provisions of 40CFR §63.114.

Are you in compliance with all applicable requirements for this emission unit? X Yes ___No

If no, complete the **Schedule of Compliance Form** as **ATTACHMENT F**.

ATTACHMENT E - Emission Unit Form

Emission Unit Description

Emission unit ID number:	**Emission unit name:**	**List any control devices associated with this emission unit:**
C4L-F-3170	CP-4 Catalyst Charge Tank	C4T-B-1600

Provide a description of the emission unit (type, method of operation, design parameters, etc.):
CP-4 Catalyst Charge Tank

Manufacturer:	**Model number:**	**Serial number:**
NA	NA	NA
Construction date:	**Installation date:**	**Modification date(s):**
NA	1996	NA

Design Capacity (examples: furnaces - tons/hr, tanks - gallons):
830 gallons

Maximum Hourly Throughput:	**Maximum Annual Throughput:**	**Maximum Operating Schedule:**
1,020 gph	38,485 gpy	8,760 hr/yr

Fuel Usage Data **(fill out all applicable fields)**

Does this emission unit combust fuel? ___ Yes X No	**If yes, is it?** ___ Indirect Fired ___Direct Fired
Maximum design heat input and/or maximum horsepower rating: NA	**Type and Btu/hr rating of burners:** NA

List the primary fuel type(s) and if applicable, the secondary fuel type(s). For each fuel type listed, provide the maximum hourly and annual fuel usage for each.
NA

Describe each fuel expected to be used during the term of the permit.

Fuel Type	Max. Sulfur Content	Max. Ash Content	BTU Value
NA	NA	NA	NA

Emissions Data		
Criteria Pollutants	Potential Emissions	
	PPH	TPY
Carbon Monoxide (CO)	See emissions from Hot Oil Heater C4T-B-1600.	
Nitrogen Oxides (NO_X)		
Lead (Pb)		
Particulate Matter ($PM_{2.5}$)		
Particulate Matter (PM_{10})		
Total Particulate Matter (TSP)		
Sulfur Dioxide (SO_2)		
Volatile Organic Compounds (VOC)		
Hazardous Air Pollutants	Potential Emissions	
	PPH	TPY
See emissions from Hot Oil Heater C4T-B-1600.		
Regulated Pollutants other than Criteria and HAP	Potential Emissions	
	PPH	TPY
NA	NA	NA

List the method(s) used to calculate the potential emissions (include dates of any stack tests conducted, versions of software used, source and dates of emission factors, etc.).

Engineering Estimate

Applicable Requirements

List all applicable requirements for this emission unit. For each applicable requirement, include the underlying rule/regulation citation and/or construction permit with the condition number. (*Note: Title V permit condition numbers alone are not the underlying applicable requirements*). If an emission limit is calculated based on the type of source and design capacity or if a standard is based on a design parameter, this information should also be included.

40CFR §63.1316(b)(2)(i); 40CFR §63.1316(b)(2)(i)(A); R13-1650K §4.1.15:

- Organic HAP emissions from all continuous process vents associated with esterification vessels ≤ 0.04 kg organic HAP per Mg of product.

X Permit Shield

For all applicable requirements listed above, provide monitoring/testing/recordkeeping/reporting which shall be used to demonstrate compliance. If the method is based on a permit or rule, include the condition number or citation. (Note: Each requirement listed above must have an associated method of demonstrating compliance. If there is not already a required method in place, then a method must be proposed.)

Monitoring:

- Control device comply with applicable provisions of 40CFR §63.114.

Are you in compliance with all applicable requirements for this emission unit? X Yes ___No

If no, complete the **Schedule of Compliance Form** as **ATTACHMENT F**.

ATTACHMENT E - Emission Unit Form

Emission Unit Description

Emission unit ID number:	**Emission unit name:**	**List any control devices associated with this emission unit:**
C4T-F-4620	CP-4 Condensed Dowtherm Receiver	NA

Provide a description of the emission unit (type, method of operation, design parameters, etc.):
CP-4 Condensed Dowtherm Receiver

Manufacturer:	**Model number:**	**Serial number:**
NA	NA	NA
Construction date:	**Installation date:**	**Modification date(s):**
NA	1996	NA

Design Capacity (examples: furnaces - tons/hr, tanks - gallons):
125 gallons

Maximum Hourly Throughput:	**Maximum Annual Throughput:**	**Maximum Operating Schedule:**
135 lb/hr	587 tpy	8,760 hr/yr

Fuel Usage Data **(fill out all applicable fields)**

Does this emission unit combust fuel? ___ Yes X No	**If yes, is it?** ___ Indirect Fired ___Direct Fired
Maximum design heat input and/or maximum horsepower rating: NA	**Type and Btu/hr rating of burners:** NA

List the primary fuel type(s) and if applicable, the secondary fuel type(s). For each fuel type listed, provide the maximum hourly and annual fuel usage for each.
NA

Describe each fuel expected to be used during the term of the permit.

Fuel Type	Max. Sulfur Content	Max. Ash Content	BTU Value
NA	NA	NA	NA

Emissions Data		
Criteria Pollutants	Potential Emissions	
	PPH	TPY
Carbon Monoxide (CO)	NA	NA
Nitrogen Oxides (NO_X)	NA	NA
Lead (Pb)	NA	NA
Particulate Matter ($PM_{2.5}$)	NA	NA
Particulate Matter (PM_{10})	NA	NA
Total Particulate Matter (TSP)	NA	NA
Sulfur Dioxide (SO_2)	NA	NA
Volatile Organic Compounds (VOC)	<0.001	<0.001
Hazardous Air Pollutants	Potential Emissions	
	PPH	TPY
NA	NA	NA
Regulated Pollutants other than Criteria and HAP	Potential Emissions	
	PPH	TPY
NA	NA	NA

List the method(s) used to calculate the potential emissions (include dates of any stack tests conducted, versions of software used, source and dates of emission factors, etc.).

Engineering Estimate

Applicable Requirements
List all applicable requirements for this emission unit. For each applicable requirement, include the underlying rule/regulation citation and/or <u>construction permit</u> with the condition number. (*Note: Title V permit condition numbers alone are not the underlying applicable requirements*). If an emission limit is calculated based on the type of source and design capacity or if a standard is based on a design parameter, this information should also be included. NA
<u>X</u> Permit Shield
For all applicable requirements listed above, provide monitoring/testing/recordkeeping/reporting which shall be used to demonstrate compliance. If the method is based on a permit or rule, include the condition number or citation. (Note: Each requirement listed above must have an associated method of demonstrating compliance. If there is not already a required method in place, then a method must be proposed.) NA
Are you in compliance with all applicable requirements for this emission unit? <u>X</u> Yes ___No If no, complete the **Schedule of Compliance Form** as **ATTACHMENT F**.

ATTACHMENT E - Emission Unit Form

Emission Unit Description

Emission unit ID number:	**Emission unit name:**	**List any control devices associated with this emission unit:**
C4A-F-0410	CP-4 Crystallizer Blending Silo	C4A-M-0340

Provide a description of the emission unit (type, method of operation, design parameters, etc.):
CP-4 Crystallizer Blending Silo

Manufacturer:	**Model number:**	**Serial number:**
NA	NA	NA
Construction date:	**Installation date:**	**Modification date(s):**
NA	1994	NA

Design Capacity (examples: furnaces - tons/hr, tanks - gallons):
3,500 ft^3

Maximum Hourly Throughput:	**Maximum Annual Throughput:**	**Maximum Operating Schedule:**
28,860 lb/hr	1,891 ltpy	8,760 hr/yr

Fuel Usage Data **(fill out all applicable fields)**

Does this emission unit combust fuel? ___ Yes X No	**If yes, is it?** ___ Indirect Fired ___Direct Fired
Maximum design heat input and/or maximum horsepower rating: NA	**Type and Btu/hr rating of burners:** NA

List the primary fuel type(s) and if applicable, the secondary fuel type(s). For each fuel type listed, provide the maximum hourly and annual fuel usage for each.
NA

Describe each fuel expected to be used during the term of the permit.

Fuel Type	Max. Sulfur Content	Max. Ash Content	BTU Value
NA	NA	NA	NA

Emissions Data		
Criteria Pollutants	Potential Emissions	
	PPH	TPY
Carbon Monoxide (CO)	NA	NA
Nitrogen Oxides (NO_X)	NA	NA
Lead (Pb)	NA	NA
Particulate Matter ($PM_{2.5}$)	NA	NA
Particulate Matter (PM_{10})	NA	NA
Total Particulate Matter (TSP)	NA	NA
Sulfur Dioxide (SO_2)	NA	NA
Volatile Organic Compounds (VOC)	0.033	0.003
Hazardous Air Pollutants	Potential Emissions	
	PPH	TPY
NA	NA	NA
Regulated Pollutants other than Criteria and HAP	Potential Emissions	
	PPH	TPY
NA	NA	NA

List the method(s) used to calculate the potential emissions (include dates of any stack tests conducted, versions of software used, source and dates of emission factors, etc.).

Engineering Estimate

Applicable Requirements

List all applicable requirements for this emission unit. For each applicable requirement, include the underlying rule/regulation citation and/or construction permit with the condition number. (*Note: Title V permit condition numbers alone are not the underlying applicable requirements*). If an emission limit is calculated based on the type of source and design capacity or if a standard is based on a design parameter, this information should also be included.

R13-1650K §4.1.13; 45CSR §7-3.7:

- Storage structure required to have full enclosure and equipped with PM control devices.

X Permit Shield

For all applicable requirements listed above, provide monitoring/testing/recordkeeping/reporting which shall be used to demonstrate compliance. If the method is based on a permit or rule, include the condition number or citation. (Note: Each requirement listed above must have an associated method of demonstrating compliance. If there is not already a required method in place, then a method must be proposed.)

NA

Are you in compliance with all applicable requirements for this emission unit? X Yes ___No

If no, complete the **Schedule of Compliance Form** as **ATTACHMENT F**.

ATTACHMENT E - Emission Unit Form

Emission Unit Description

Emission unit ID number:	**Emission unit name:**	**List any control devices associated with this emission unit:**
C4L-F-3190	CP-4 DEG Charge Tank	NA

Provide a description of the emission unit (type, method of operation, design parameters, etc.):
CP-4 DEG Charge Tank

Manufacturer:	**Model number:**	**Serial number:**
NA	NA	NA
Construction date:	**Installation date:**	**Modification date(s):**
NA	1996	NA

Design Capacity (examples: furnaces - tons/hr, tanks - gallons):
275 gallons

Maximum Hourly Throughput:	**Maximum Annual Throughput:**	**Maximum Operating Schedule:**
1,080 gph	9.5 mmgpy	8,760 hr/yr

Fuel Usage Data **(fill out all applicable fields)**

Does this emission unit combust fuel? ___ Yes X No	**If yes, is it?** ___ Indirect Fired ___Direct Fired
Maximum design heat input and/or maximum horsepower rating: NA	**Type and Btu/hr rating of burners:** NA

List the primary fuel type(s) and if applicable, the secondary fuel type(s). For each fuel type listed, provide the maximum hourly and annual fuel usage for each.
NA

Describe each fuel expected to be used during the term of the permit.

Fuel Type	Max. Sulfur Content	Max. Ash Content	BTU Value
NA	NA	NA	NA

Emissions Data		
Criteria Pollutants	Potential Emissions	
	PPH	TPY
Carbon Monoxide (CO)	NA	NA
Nitrogen Oxides (NO_X)	NA	NA
Lead (Pb)	NA	NA
Particulate Matter ($PM_{2.5}$)	NA	NA
Particulate Matter (PM_{10})	NA	NA
Total Particulate Matter (TSP)	NA	NA
Sulfur Dioxide (SO_2)	NA	NA
Volatile Organic Compounds (VOC)	0.001	0.001
Hazardous Air Pollutants	Potential Emissions	
	PPH	TPY
NA	NA	NA
Regulated Pollutants other than Criteria and HAP	Potential Emissions	
	PPH	TPY
NA	NA	NA

List the method(s) used to calculate the potential emissions (include dates of any stack tests conducted, versions of software used, source and dates of emission factors, etc.).

Engineering Estimate

Applicable Requirements
List all applicable requirements for this emission unit. For each applicable requirement, include the underlying rule/regulation citation and/or <u>construction permit</u> with the condition number. (*Note: Title V permit condition numbers alone are not the underlying applicable requirements*). If an emission limit is calculated based on the type of source and design capacity or if a standard is based on a design parameter, this information should also be included. **40CFR §63.1316(b)(2)(i); 40CFR §63.1316(b)(2)(i)(A); R13-1650K §4.1.15:** • Organic HAP emissions from all continuous process vents associated with esterification vessels ≤ 0.04 kg organic HAP per Mg of product.
<u>X</u> Permit Shield
For all applicable requirements listed above, provide monitoring/testing/recordkeeping/reporting which shall be used to demonstrate compliance. If the method is based on a permit or rule, include the condition number or citation. (Note: Each requirement listed above must have an associated method of demonstrating compliance. If there is not already a required method in place, then a method must be proposed.) *Monitoring:* • Control device comply with applicable provisions of 40CFR §63.114.
Are you in compliance with all applicable requirements for this emission unit? <u>X</u> Yes ___No If no, complete the **Schedule of Compliance Form** as **ATTACHMENT F**.

ATTACHMENT E - Emission Unit Form

Emission Unit Description

Emission unit ID number:	**Emission unit name:**	**List any control devices associated with this emission unit:**
C4L-F-1800	CP-4 EG Storage Tank	NA

Provide a description of the emission unit (type, method of operation, design parameters, etc.):
CP-4 EG Storage Tank

Manufacturer:	**Model number:**	**Serial number:**
NA	NA	NA
Construction date:	**Installation date:**	**Modification date(s):**
NA	1996	NA

Design Capacity (examples: furnaces - tons/hr, tanks - gallons):
675,000 gallons

Maximum Hourly Throughput:	**Maximum Annual Throughput:**	**Maximum Operating Schedule:**
24,000 gph	8.3 mmgpy	8,760 hr/yr

Fuel Usage Data **(fill out all applicable fields)**

Does this emission unit combust fuel? ___ Yes X No	**If yes, is it?** ___ Indirect Fired ___Direct Fired
Maximum design heat input and/or maximum horsepower rating: NA	**Type and Btu/hr rating of burners:** NA

List the primary fuel type(s) and if applicable, the secondary fuel type(s). For each fuel type listed, provide the maximum hourly and annual fuel usage for each.
NA

Describe each fuel expected to be used during the term of the permit.

Fuel Type	Max. Sulfur Content	Max. Ash Content	BTU Value
NA	NA	NA	NA

Emissions Data		
Criteria Pollutants	Potential Emissions	
	PPH	TPY
Carbon Monoxide (CO)	NA	NA
Nitrogen Oxides (NO_X)	NA	NA
Lead (Pb)	NA	NA
Particulate Matter ($PM_{2.5}$)	NA	NA
Particulate Matter (PM_{10})	NA	NA
Total Particulate Matter (TSP)	NA	NA
Sulfur Dioxide (SO_2)	NA	NA
Volatile Organic Compounds (VOC)	0.002	0.001
Hazardous Air Pollutants	Potential Emissions	
	PPH	TPY
Ethylene Glycol	0.002	0.001
Regulated Pollutants other than Criteria and HAP	Potential Emissions	
	PPH	TPY
NA	NA	NA

List the method(s) used to calculate the potential emissions (include dates of any stack tests conducted, versions of software used, source and dates of emission factors, etc.).

Engineering Estimate

Applicable Requirements
List all applicable requirements for this emission unit. For each applicable requirement, include the underlying rule/regulation citation and/or <u>construction permit</u> with the condition number. (*Note: Title V permit condition numbers alone are not the underlying applicable requirements*). If an emission limit is calculated based on the type of source and design capacity or if a standard is based on a design parameter, this information should also be included. NA
<u>X</u> Permit Shield
For all applicable requirements listed above, provide monitoring/testing/recordkeeping/reporting which shall be used to demonstrate compliance. If the method is based on a permit or rule, include the condition number or citation. (Note: Each requirement listed above must have an associated method of demonstrating compliance. If there is not already a required method in place, then a method must be proposed.) NA
Are you in compliance with all applicable requirements for this emission unit? <u>X</u> Yes ___No If no, complete the **Schedule of Compliance Form** as **ATTACHMENT F**.

ATTACHMENT E - Emission Unit Form

Emission Unit Description

Emission unit ID number:	**Emission unit name:**	**List any control devices associated with this emission unit:**
C4Q-A-1296	CP-4 Extruder	NA

Provide a description of the emission unit (type, method of operation, design parameters, etc.):
CP-4 Extruder

Manufacturer:	**Model number:**	**Serial number:**
NA	NA	NA
Construction date:	**Installation date:**	**Modification date(s):**
NA	2004	NA

Design Capacity (examples: furnaces - tons/hr, tanks - gallons):
4,760 lb/hr

Maximum Hourly Throughput:	**Maximum Annual Throughput:**	**Maximum Operating Schedule:**
4,760 lb/hr	20,850 tpy	8,760 hr/yr

Fuel Usage Data **(fill out all applicable fields)**

Does this emission unit combust fuel? ___ Yes X No	**If yes, is it?** ___ Indirect Fired ___Direct Fired
Maximum design heat input and/or maximum horsepower rating: NA	**Type and Btu/hr rating of burners:** NA

List the primary fuel type(s) and if applicable, the secondary fuel type(s). For each fuel type listed, provide the maximum hourly and annual fuel usage for each.
NA

Describe each fuel expected to be used during the term of the permit.

Fuel Type	Max. Sulfur Content	Max. Ash Content	BTU Value
NA	NA	NA	NA

Emissions Data		
Criteria Pollutants	Potential Emissions	
	PPH	TPY
Carbon Monoxide (CO)	NA	NA
Nitrogen Oxides (NO_X)	NA	NA
Lead (Pb)	NA	NA
Particulate Matter ($PM_{2.5}$)	NA	NA
Particulate Matter (PM_{10})	0.62	2.72
Total Particulate Matter (TSP)	0.62	2.72
Sulfur Dioxide (SO_2)	1.07	9.34
Volatile Organic Compounds (VOC)	NA	NA
Hazardous Air Pollutants	Potential Emissions	
	PPH	TPY
NA	NA	NA
Regulated Pollutants other than Criteria and HAP	Potential Emissions	
	PPH	TPY
HCl	0.62	2.72

List the method(s) used to calculate the potential emissions (include dates of any stack tests conducted, versions of software used, source and dates of emission factors, etc.).

Engineering Estimate

Applicable Requirements
List all applicable requirements for this emission unit. For each applicable requirement, include the underlying rule/regulation citation and/or construction permit with the condition number. (*Note: Title V permit condition numbers alone are not the underlying applicable requirements*). If an emission limit is calculated based on the type of source and design capacity or if a standard is based on a design parameter, this information should also be included. NA
X Permit Shield
For all applicable requirements listed above, provide monitoring/testing/recordkeeping/reporting which shall be used to demonstrate compliance. If the method is based on a permit or rule, include the condition number or citation. (Note: Each requirement listed above must have an associated method of demonstrating compliance. If there is not already a required method in place, then a method must be proposed.) NA
Are you in compliance with all applicable requirements for this emission unit? X Yes ___No If no, complete the **Schedule of Compliance Form** as **ATTACHMENT F**.

ATTACHMENT E - Emission Unit Form

Emission Unit Description

Emission unit ID number:	**Emission unit name:**	**List any control devices associated with this emission unit:**
C4Q-A-1297	CP-4 Extruder	C4T-B-1600

Provide a description of the emission unit (type, method of operation, design parameters, etc.):
CP-4 Catalyst Charge Tank

Manufacturer:	**Model number:**	**Serial number:**
NA	NA	NA
Construction date:	**Installation date:**	**Modification date(s):**
NA	2007	NA

Design Capacity (examples: furnaces - tons/hr, tanks - gallons):
2,800 lb/hr

Maximum Hourly Throughput:	**Maximum Annual Throughput:**	**Maximum Operating Schedule:**
2,800 lb/hr	12,264 tpy	8,760 hr/yr

Fuel Usage Data **(fill out all applicable fields)**

Does this emission unit combust fuel? ___ Yes X No	**If yes, is it?** ___ Indirect Fired ___Direct Fired
Maximum design heat input and/or maximum horsepower rating: NA	**Type and Btu/hr rating of burners:** NA

List the primary fuel type(s) and if applicable, the secondary fuel type(s). For each fuel type listed, provide the maximum hourly and annual fuel usage for each.
NA

Describe each fuel expected to be used during the term of the permit.

Fuel Type	Max. Sulfur Content	Max. Ash Content	BTU Value
NA	NA	NA	NA

Emissions Data		
Criteria Pollutants	Potential Emissions	
	PPH	TPY
Carbon Monoxide (CO)	See emissions from Hot Oil Heater C4T-B-1600.	
Nitrogen Oxides (NO_X)		
Lead (Pb)		
Particulate Matter ($PM_{2.5}$)		
Particulate Matter (PM_{10})		
Total Particulate Matter (TSP)		
Sulfur Dioxide (SO_2)		
Volatile Organic Compounds (VOC)		
Hazardous Air Pollutants	Potential Emissions	
	PPH	TPY
See emissions from Hot Oil Heater C4T-B-1600.		
Regulated Pollutants other than Criteria and HAP	Potential Emissions	
	PPH	TPY
NA	NA	NA

List the method(s) used to calculate the potential emissions (include dates of any stack tests conducted, versions of software used, source and dates of emission factors, etc.).

Engineering Estimate

Applicable Requirements
List all applicable requirements for this emission unit. For each applicable requirement, include the underlying rule/regulation citation and/or construction permit with the condition number. (*Note: Title V permit condition numbers alone are not the underlying applicable requirements*). If an emission limit is calculated based on the type of source and design capacity or if a standard is based on a design parameter, this information should also be included. NA
X Permit Shield
For all applicable requirements listed above, provide monitoring/testing/recordkeeping/reporting which shall be used to demonstrate compliance. If the method is based on a permit or rule, include the condition number or citation. (Note: Each requirement listed above must have an associated method of demonstrating compliance. If there is not already a required method in place, then a method must be proposed.) NA
Are you in compliance with all applicable requirements for this emission unit? X Yes ___No If no, complete the **Schedule of Compliance Form** as **ATTACHMENT F**.

ATTACHMENT E - Emission Unit Form

Emission Unit Description

Emission unit ID number:	**Emission unit name:**	**List any control devices associated with this emission unit:**
C4Q-F-5010	CP-4 Feed Bin	C4Q-M-0001/ C4Q-F-0001

Provide a description of the emission unit (type, method of operation, design parameters, etc.):
CP-4 Feed Bin

Manufacturer:	**Model number:**	**Serial number:**
NA	NA	NA
Construction date:	**Installation date:**	**Modification date(s):**
NA	2007	NA

Design Capacity (examples: furnaces - tons/hr, tanks - gallons):
530 ft^3

Maximum Hourly Throughput:	**Maximum Annual Throughput:**	**Maximum Operating Schedule:**
28,160 lb/hr	NA	8,760 hr/yr

Fuel Usage Data **(fill out all applicable fields)**

Does this emission unit combust fuel? ___ Yes X No	**If yes, is it?** ___ Indirect Fired ___Direct Fired
Maximum design heat input and/or maximum horsepower rating: NA	**Type and Btu/hr rating of burners:** NA

List the primary fuel type(s) and if applicable, the secondary fuel type(s). For each fuel type listed, provide the maximum hourly and annual fuel usage for each.
NA

Describe each fuel expected to be used during the term of the permit.

Fuel Type	Max. Sulfur Content	Max. Ash Content	BTU Value
NA	NA	NA	NA

Emissions Data		
Criteria Pollutants	Potential Emissions	
	PPH	TPY
Carbon Monoxide (CO)	NA	NA
Nitrogen Oxides (NO_X)	NA	NA
Lead (Pb)	NA	NA
Particulate Matter ($PM_{2.5}$)	NA	NA
Particulate Matter (PM_{10})	0.003	0.001
Total Particulate Matter (TSP)	0.003	0.001
Sulfur Dioxide (SO_2)	NA	NA
Volatile Organic Compounds (VOC)	NA	NA
Hazardous Air Pollutants	Potential Emissions	
	PPH	TPY
NA	NA	NA
Regulated Pollutants other than Criteria and HAP	Potential Emissions	
	PPH	TPY
NA	NA	NA

List the method(s) used to calculate the potential emissions (include dates of any stack tests conducted, versions of software used, source and dates of emission factors, etc.).

Engineering Estimate

Applicable Requirements
List all applicable requirements for this emission unit. For each applicable requirement, include the underlying rule/regulation citation and/or construction permit with the condition number. (*Note: Title V permit condition numbers alone are not the underlying applicable requirements*). If an emission limit is calculated based on the type of source and design capacity or if a standard is based on a design parameter, this information should also be included. NA
X Permit Shield
For all applicable requirements listed above, provide monitoring/testing/recordkeeping/reporting which shall be used to demonstrate compliance. If the method is based on a permit or rule, include the condition number or citation. (Note: Each requirement listed above must have an associated method of demonstrating compliance. If there is not already a required method in place, then a method must be proposed.) NA
Are you in compliance with all applicable requirements for this emission unit? X Yes ___No If no, complete the **Schedule of Compliance Form** as **ATTACHMENT F**.

ATTACHMENT E - Emission Unit Form

Emission Unit Description

Emission unit ID number:	**Emission unit name:**	**List any control devices associated with this emission unit:**
C4Q-F-1290	CP-4 Feed Hopper System	C4Q-M-4140/ C4Q-F-4220

Provide a description of the emission unit (type, method of operation, design parameters, etc.):
CP-4 Feed Hopper System

Manufacturer:	**Model number:**	**Serial number:**
NA	NA	NA
Construction date:	**Installation date:**	**Modification date(s):**
NA	2004	NA

Design Capacity (examples: furnaces - tons/hr, tanks - gallons):
0.75 m^3

Maximum Hourly Throughput:	**Maximum Annual Throughput:**	**Maximum Operating Schedule:**
28,160 lb/hr	NA	8,760 hr/yr

Fuel Usage Data **(fill out all applicable fields)**

Does this emission unit combust fuel? ___ Yes X No	**If yes, is it?** ___ Indirect Fired ___Direct Fired
Maximum design heat input and/or maximum horsepower rating: NA	**Type and Btu/hr rating of burners:** NA

List the primary fuel type(s) and if applicable, the secondary fuel type(s). For each fuel type listed, provide the maximum hourly and annual fuel usage for each.
NA

Describe each fuel expected to be used during the term of the permit.

Fuel Type	Max. Sulfur Content	Max. Ash Content	BTU Value
NA	NA	NA	NA

Emissions Data		
Criteria Pollutants	Potential Emissions	
	PPH	TPY
Carbon Monoxide (CO)	NA	NA
Nitrogen Oxides (NO_X)	NA	NA
Lead (Pb)	NA	NA
Particulate Matter ($PM_{2.5}$)	NA	NA
Particulate Matter (PM_{10})	0.03	0.10
Total Particulate Matter (TSP)	0.03	0.10
Sulfur Dioxide (SO_2)	NA	NA
Volatile Organic Compounds (VOC)	NA	NA
Hazardous Air Pollutants	Potential Emissions	
	PPH	TPY
NA	NA	NA
Regulated Pollutants other than Criteria and HAP	Potential Emissions	
	PPH	TPY
NA	NA	NA

List the method(s) used to calculate the potential emissions (include dates of any stack tests conducted, versions of software used, source and dates of emission factors, etc.).

Engineering Estimate

Applicable Requirements
List all applicable requirements for this emission unit. For each applicable requirement, include the underlying rule/regulation citation and/or construction permit with the condition number. (*Note: Title V permit condition numbers alone are not the underlying applicable requirements*). If an emission limit is calculated based on the type of source and design capacity or if a standard is based on a design parameter, this information should also be included. NA
X Permit Shield
For all applicable requirements listed above, provide monitoring/testing/recordkeeping/reporting which shall be used to demonstrate compliance. If the method is based on a permit or rule, include the condition number or citation. (Note: Each requirement listed above must have an associated method of demonstrating compliance. If there is not already a required method in place, then a method must be proposed.) NA
Are you in compliance with all applicable requirements for this emission unit? X Yes ___No If no, complete the **Schedule of Compliance Form** as **ATTACHMENT F**.

ATTACHMENT E - Emission Unit Form

Emission Unit Description

Emission unit ID number:	**Emission unit name:**	**List any control devices associated with this emission unit:**
C4Q-F-2290	CP-4 Feed Hopper System	C4Q-M-4190

Provide a description of the emission unit (type, method of operation, design parameters, etc.):
CP-4 Feed Hopper System

Manufacturer:	**Model number:**	**Serial number:**
NA	NA	NA
Construction date:	**Installation date:**	**Modification date(s):**
NA	2004	NA

Design Capacity (examples: furnaces - tons/hr, tanks - gallons):
0.75 m^3

Maximum Hourly Throughput:	**Maximum Annual Throughput:**	**Maximum Operating Schedule:**
5,664 lb/hr	NA	8,760 hr/yr

Fuel Usage Data **(fill out all applicable fields)**

Does this emission unit combust fuel? ___ Yes X No	**If yes, is it?** ___ Indirect Fired ___Direct Fired
Maximum design heat input and/or maximum horsepower rating: NA	**Type and Btu/hr rating of burners:** NA

List the primary fuel type(s) and if applicable, the secondary fuel type(s). For each fuel type listed, provide the maximum hourly and annual fuel usage for each.
NA

Describe each fuel expected to be used during the term of the permit.

Fuel Type	Max. Sulfur Content	Max. Ash Content	BTU Value
NA	NA	NA	NA

Emissions Data		
Criteria Pollutants	Potential Emissions	
	PPH	TPY
Carbon Monoxide (CO)	NA	NA
Nitrogen Oxides (NO_X)	NA	NA
Lead (Pb)	NA	NA
Particulate Matter ($PM_{2.5}$)	NA	NA
Particulate Matter (PM_{10})	0.03	0.12
Total Particulate Matter (TSP)	0.03	0.12
Sulfur Dioxide (SO_2)	NA	NA
Volatile Organic Compounds (VOC)	NA	NA
Hazardous Air Pollutants	Potential Emissions	
	PPH	TPY
NA	NA	NA
Regulated Pollutants other than Criteria and HAP	Potential Emissions	
	PPH	TPY
NA	NA	NA

List the method(s) used to calculate the potential emissions (include dates of any stack tests conducted, versions of software used, source and dates of emission factors, etc.).

Engineering Estimate

Applicable Requirements
List all applicable requirements for this emission unit. For each applicable requirement, include the underlying rule/regulation citation and/or construction permit with the condition number. (*Note: Title V permit condition numbers alone are not the underlying applicable requirements*). If an emission limit is calculated based on the type of source and design capacity or if a standard is based on a design parameter, this information should also be included. NA
X Permit Shield
For all applicable requirements listed above, provide monitoring/testing/recordkeeping/reporting which shall be used to demonstrate compliance. If the method is based on a permit or rule, include the condition number or citation. (Note: Each requirement listed above must have an associated method of demonstrating compliance. If there is not already a required method in place, then a method must be proposed.) NA
Are you in compliance with all applicable requirements for this emission unit? X Yes ___No If no, complete the **Schedule of Compliance Form** as **ATTACHMENT F**.

ATTACHMENT E - Emission Unit Form

Emission Unit Description

Emission unit ID number:	**Emission unit name:**	**List any control devices associated with this emission unit:**
C4Q-F-3290	CP-4 Feed Hopper System	C4Q-M-4160

Provide a description of the emission unit (type, method of operation, design parameters, etc.):
CP-4 Feed Hopper System

Manufacturer:	**Model number:**	**Serial number:**
NA	NA	NA
Construction date:	**Installation date:**	**Modification date(s):**
NA	2004	NA

Design Capacity (examples: furnaces - tons/hr, tanks - gallons):
0.75 m^3

Maximum Hourly Throughput:	**Maximum Annual Throughput:**	**Maximum Operating Schedule:**
6,000 lb/hr	NA	8,760 hr/yr

Fuel Usage Data **(fill out all applicable fields)**

Does this emission unit combust fuel? ___ Yes X No	**If yes, is it?** ___ Indirect Fired ___Direct Fired
Maximum design heat input and/or maximum horsepower rating: NA	**Type and Btu/hr rating of burners:** NA

List the primary fuel type(s) and if applicable, the secondary fuel type(s). For each fuel type listed, provide the maximum hourly and annual fuel usage for each.
NA

Describe each fuel expected to be used during the term of the permit.

Fuel Type	Max. Sulfur Content	Max. Ash Content	BTU Value
NA	NA	NA	NA

Emissions Data		
Criteria Pollutants	Potential Emissions	
	PPH	TPY
Carbon Monoxide (CO)	NA	NA
Nitrogen Oxides (NO_X)	NA	NA
Lead (Pb)	NA	NA
Particulate Matter ($PM_{2.5}$)	NA	NA
Particulate Matter (PM_{10})	0.01	0.24
Total Particulate Matter (TSP)	0.01	0.24
Sulfur Dioxide (SO_2)	NA	NA
Volatile Organic Compounds (VOC)	NA	NA
Hazardous Air Pollutants	Potential Emissions	
	PPH	TPY
NA	NA	NA
Regulated Pollutants other than Criteria and HAP	Potential Emissions	
	PPH	TPY
NA	NA	NA

List the method(s) used to calculate the potential emissions (include dates of any stack tests conducted, versions of software used, source and dates of emission factors, etc.).

Engineering Estimate

Applicable Requirements
List all applicable requirements for this emission unit. For each applicable requirement, include the underlying rule/regulation citation and/or construction permit with the condition number. (*Note: Title V permit condition numbers alone are not the underlying applicable requirements*). If an emission limit is calculated based on the type of source and design capacity or if a standard is based on a design parameter, this information should also be included. NA
X Permit Shield
For all applicable requirements listed above, provide monitoring/testing/recordkeeping/reporting which shall be used to demonstrate compliance. If the method is based on a permit or rule, include the condition number or citation. (Note: Each requirement listed above must have an associated method of demonstrating compliance. If there is not already a required method in place, then a method must be proposed.) NA
Are you in compliance with all applicable requirements for this emission unit? X Yes ___No If no, complete the **Schedule of Compliance Form** as **ATTACHMENT F**.

ATTACHMENT E - Emission Unit Form

Emission Unit Description

Emission unit ID number:	**Emission unit name:**	**List any control devices associated with this emission unit:**
C4Q-F-5000	CP-4 Feed Hopper System	C4Q-M-2002

Provide a description of the emission unit (type, method of operation, design parameters, etc.):
CP-4 Feed Hopper System

Manufacturer:	**Model number:**	**Serial number:**
NA	NA	NA
Construction date:	**Installation date:**	**Modification date(s):**
NA	2007	NA

Design Capacity (examples: furnaces - tons/hr, tanks - gallons):
0.75 m^3

Maximum Hourly Throughput:	**Maximum Annual Throughput:**	**Maximum Operating Schedule:**
28,160 lb/hr	NA	8,760 hr/yr

Fuel Usage Data **(fill out all applicable fields)**

Does this emission unit combust fuel? ___ Yes X No	**If yes, is it?** ___ Indirect Fired ___Direct Fired
Maximum design heat input and/or maximum horsepower rating: NA	**Type and Btu/hr rating of burners:** NA

List the primary fuel type(s) and if applicable, the secondary fuel type(s). For each fuel type listed, provide the maximum hourly and annual fuel usage for each.
NA

Describe each fuel expected to be used during the term of the permit.

Fuel Type	Max. Sulfur Content	Max. Ash Content	BTU Value
NA	NA	NA	NA

Emissions Data		
Criteria Pollutants	Potential Emissions	
	PPH	TPY
Carbon Monoxide (CO)	NA	NA
Nitrogen Oxides (NO_X)	NA	NA
Lead (Pb)	NA	NA
Particulate Matter ($PM_{2.5}$)	NA	NA
Particulate Matter (PM_{10})	0.04	0.08
Total Particulate Matter (TSP)	0.04	0.08
Sulfur Dioxide (SO_2)	NA	NA
Volatile Organic Compounds (VOC)	NA	NA
Hazardous Air Pollutants	Potential Emissions	
	PPH	TPY
NA	NA	NA
Regulated Pollutants other than Criteria and HAP	Potential Emissions	
	PPH	TPY
NA	NA	NA

List the method(s) used to calculate the potential emissions (include dates of any stack tests conducted, versions of software used, source and dates of emission factors, etc.).

Engineering Estimate

Applicable Requirements
List all applicable requirements for this emission unit. For each applicable requirement, include the underlying rule/regulation citation and/or construction permit with the condition number. (*Note: Title V permit condition numbers alone are not the underlying applicable requirements*). If an emission limit is calculated based on the type of source and design capacity or if a standard is based on a design parameter, this information should also be included. NA
X Permit Shield
For all applicable requirements listed above, provide monitoring/testing/recordkeeping/reporting which shall be used to demonstrate compliance. If the method is based on a permit or rule, include the condition number or citation. (Note: Each requirement listed above must have an associated method of demonstrating compliance. If there is not already a required method in place, then a method must be proposed.) NA
Are you in compliance with all applicable requirements for this emission unit? X Yes ___No If no, complete the **Schedule of Compliance Form** as **ATTACHMENT F**.

ATTACHMENT E - Emission Unit Form

Emission Unit Description

Emission unit ID number:	**Emission unit name:**	**List any control devices associated with this emission unit:**
F-7640	CP-3 Hot Oil Storage Tank	NA

Provide a description of the emission unit (type, method of operation, design parameters, etc.):
CP-3 Hot Oil Storage Tank

Manufacturer:	**Model number:**	**Serial number:**
NA	NA	NA
Construction date:	**Installation date:**	**Modification date(s):**
NA	1996	NA

Design Capacity (examples: furnaces - tons/hr, tanks - gallons):
16,725 gallons

Maximum Hourly Throughput:	**Maximum Annual Throughput:**	**Maximum Operating Schedule:**
6,000 gph	NA	8,760 hr/yr

Fuel Usage Data **(fill out all applicable fields)**

Does this emission unit combust fuel? ___ Yes X No	**If yes, is it?** ___ Indirect Fired ___Direct Fired
Maximum design heat input and/or maximum horsepower rating: NA	**Type and Btu/hr rating of burners:** NA

List the primary fuel type(s) and if applicable, the secondary fuel type(s). For each fuel type listed, provide the maximum hourly and annual fuel usage for each.
NA

Describe each fuel expected to be used during the term of the permit.

Fuel Type	Max. Sulfur Content	Max. Ash Content	BTU Value
NA	NA	NA	NA

Emissions Data		
Criteria Pollutants	Potential Emissions	
	PPH	TPY
Carbon Monoxide (CO)	NA	NA
Nitrogen Oxides (NO_X)	NA	NA
Lead (Pb)	NA	NA
Particulate Matter ($PM_{2.5}$)	NA	NA
Particulate Matter (PM_{10})	NA	NA
Total Particulate Matter (TSP)	NA	NA
Sulfur Dioxide (SO_2)	NA	NA
Volatile Organic Compounds (VOC)	0.001	0.001
Hazardous Air Pollutants	Potential Emissions	
	PPH	TPY
NA	NA	NA
Regulated Pollutants other than Criteria and HAP	Potential Emissions	
	PPH	TPY
NA	NA	NA

List the method(s) used to calculate the potential emissions (include dates of any stack tests conducted, versions of software used, source and dates of emission factors, etc.).

Engineering Estimate

Applicable Requirements
List all applicable requirements for this emission unit. For each applicable requirement, include the underlying rule/regulation citation and/or <u>construction permit</u> with the condition number. (*Note: Title V permit condition numbers alone are not the underlying applicable requirements*). If an emission limit is calculated based on the type of source and design capacity or if a standard is based on a design parameter, this information should also be included. NA
<u>X</u> Permit Shield
For all applicable requirements listed above, provide monitoring/testing/recordkeeping/reporting which shall be used to demonstrate compliance. If the method is based on a permit or rule, include the condition number or citation. (Note: Each requirement listed above must have an associated method of demonstrating compliance. If there is not already a required method in place, then a method must be proposed.) NA
Are you in compliance with all applicable requirements for this emission unit? <u>X</u> Yes ___No If no, complete the **Schedule of Compliance Form** as **ATTACHMENT F**.

ATTACHMENT E - Emission Unit Form

Emission Unit Description

Emission unit ID number:	**Emission unit name:**	**List any control devices associated with this emission unit:**
C4S-F-2050	CP-4 IPA Surge Silo	C4S-M-2100

Provide a description of the emission unit (type, method of operation, design parameters, etc.):
CP-4 IPA Surge Silo

Manufacturer:	**Model number:**	**Serial number:**
NA	NA	NA
Construction date:	**Installation date:**	**Modification date(s):**
NA	1996	NA

Design Capacity (examples: furnaces - tons/hr, tanks - gallons):
8’ x 18’ t/s

Maximum Hourly Throughput:	**Maximum Annual Throughput:**	**Maximum Operating Schedule:**
6,537 lb/hr	3,922 tpy	8,760 hr/yr

Fuel Usage Data **(fill out all applicable fields)**

Does this emission unit combust fuel? ___ Yes X No	**If yes, is it?** ___ Indirect Fired ___Direct Fired
Maximum design heat input and/or maximum horsepower rating: NA	**Type and Btu/hr rating of burners:** NA

List the primary fuel type(s) and if applicable, the secondary fuel type(s). For each fuel type listed, provide the maximum hourly and annual fuel usage for each.
NA

Describe each fuel expected to be used during the term of the permit.

Fuel Type	Max. Sulfur Content	Max. Ash Content	BTU Value
NA	NA	NA	NA

Emissions Data		
Criteria Pollutants	Potential Emissions	
	PPH	TPY
Carbon Monoxide (CO)	NA	NA
Nitrogen Oxides (NO_X)	NA	NA
Lead (Pb)	NA	NA
Particulate Matter ($PM_{2.5}$)	NA	NA
Particulate Matter (PM_{10})	0.01	0.01
Total Particulate Matter (TSP)	0.01	0.01
Sulfur Dioxide (SO_2)	NA	NA
Volatile Organic Compounds (VOC)	NA	NA
Hazardous Air Pollutants	Potential Emissions	
	PPH	TPY
NA	NA	NA
Regulated Pollutants other than Criteria and HAP	Potential Emissions	
	PPH	TPY
NA	NA	NA

List the method(s) used to calculate the potential emissions (include dates of any stack tests conducted, versions of software used, source and dates of emission factors, etc.).

Engineering Estimate

Applicable Requirements

List all applicable requirements for this emission unit. For each applicable requirement, include the underlying rule/regulation citation and/or construction permit with the condition number. (*Note: Title V permit condition numbers alone are not the underlying applicable requirements*). If an emission limit is calculated based on the type of source and design capacity or if a standard is based on a design parameter, this information should also be included.

R13-1650K §4.1.13; 45CSR §7-3.7:

- Storage structure required to have full enclosure and equipped with PM control devices.

X Permit Shield

For all applicable requirements listed above, provide monitoring/testing/recordkeeping/reporting which shall be used to demonstrate compliance. If the method is based on a permit or rule, include the condition number or citation. (Note: Each requirement listed above must have an associated method of demonstrating compliance. If there is not already a required method in place, then a method must be proposed.)

NA

Are you in compliance with all applicable requirements for this emission unit? X Yes ___No

If no, complete the **Schedule of Compliance Form** as **ATTACHMENT F**.

ATTACHMENT E - Emission Unit Form

Emission Unit Description

Emission unit ID number:	**Emission unit name:**	**List any control devices associated with this emission unit:**
C4L-F-2200	CP-4 Make-Up Tank	C4T-B-1600

Provide a description of the emission unit (type, method of operation, design parameters, etc.):
CP-4 Make-Up Tank

Manufacturer:	**Model number:**	**Serial number:**
NA	NA	NA
Construction date:	**Installation date:**	**Modification date(s):**
NA	1994	NA

Design Capacity (examples: furnaces - tons/hr, tanks - gallons):
400 gallons

Maximum Hourly Throughput:	**Maximum Annual Throughput:**	**Maximum Operating Schedule:**
56 gpm	0.37 mmgpy	8,760 hr/yr

Fuel Usage Data **(fill out all applicable fields)**

Does this emission unit combust fuel? ___ Yes X No	**If yes, is it?** ___ Indirect Fired ___Direct Fired
Maximum design heat input and/or maximum horsepower rating: NA	**Type and Btu/hr rating of burners:** NA

List the primary fuel type(s) and if applicable, the secondary fuel type(s). For each fuel type listed, provide the maximum hourly and annual fuel usage for each.
NA

Describe each fuel expected to be used during the term of the permit.

Fuel Type	Max. Sulfur Content	Max. Ash Content	BTU Value
NA	NA	NA	NA

Emissions Data		
Criteria Pollutants	Potential Emissions	
	PPH	TPY
Carbon Monoxide (CO)	See emissions from Hot Oil Heater C4T-B-1600.	
Nitrogen Oxides (NO_X)		
Lead (Pb)		
Particulate Matter ($PM_{2.5}$)		
Particulate Matter (PM_{10})		
Total Particulate Matter (TSP)		
Sulfur Dioxide (SO_2)		
Volatile Organic Compounds (VOC)		
Hazardous Air Pollutants	Potential Emissions	
	PPH	TPY
See emissions from Hot Oil Heater C4T-B-1600.		
Regulated Pollutants other than Criteria and HAP	Potential Emissions	
	PPH	TPY
NA	NA	NA

List the method(s) used to calculate the potential emissions (include dates of any stack tests conducted, versions of software used, source and dates of emission factors, etc.).

Engineering Estimate

Applicable Requirements
List all applicable requirements for this emission unit. For each applicable requirement, include the underlying rule/regulation citation and/or construction permit with the condition number. (*Note: Title V permit condition numbers alone are not the underlying applicable requirements*). If an emission limit is calculated based on the type of source and design capacity or if a standard is based on a design parameter, this information should also be included. NA
X Permit Shield
For all applicable requirements listed above, provide monitoring/testing/recordkeeping/reporting which shall be used to demonstrate compliance. If the method is based on a permit or rule, include the condition number or citation. (Note: Each requirement listed above must have an associated method of demonstrating compliance. If there is not already a required method in place, then a method must be proposed.) NA
Are you in compliance with all applicable requirements for this emission unit? X Yes ___No If no, complete the **Schedule of Compliance Form** as **ATTACHMENT F**.

ATTACHMENT E - Emission Unit Form

Emission Unit Description

Emission unit ID number:	**Emission unit name:**	**List any control devices associated with this emission unit:**
C4L-F-5980	CP-4 Make-Up Tank	C4T-B-1600

Provide a description of the emission unit (type, method of operation, design parameters, etc.):
CP-4 Make-Up Tank

Manufacturer:	**Model number:**	**Serial number:**
NA	NA	NA
Construction date:	**Installation date:**	**Modification date(s):**
NA	1994	NA

Design Capacity (examples: furnaces - tons/hr, tanks - gallons):
533 gallons

Maximum Hourly Throughput:	**Maximum Annual Throughput:**	**Maximum Operating Schedule:**
56 gpm	0.37 mmgpy	8,760 hr/yr

Fuel Usage Data **(fill out all applicable fields)**

Does this emission unit combust fuel? ___ Yes X No	**If yes, is it?** ___ Indirect Fired ___Direct Fired
Maximum design heat input and/or maximum horsepower rating: NA	**Type and Btu/hr rating of burners:** NA

List the primary fuel type(s) and if applicable, the secondary fuel type(s). For each fuel type listed, provide the maximum hourly and annual fuel usage for each.
NA

Describe each fuel expected to be used during the term of the permit.

Fuel Type	Max. Sulfur Content	Max. Ash Content	BTU Value
NA	NA	NA	NA

Emissions Data		
Criteria Pollutants	Potential Emissions	
	PPH	TPY
Carbon Monoxide (CO)	See emissions from Hot Oil Heater C4T-B-1600.	
Nitrogen Oxides (NO_X)		
Lead (Pb)		
Particulate Matter ($PM_{2.5}$)		
Particulate Matter (PM_{10})		
Total Particulate Matter (TSP)		
Sulfur Dioxide (SO_2)		
Volatile Organic Compounds (VOC)		
Hazardous Air Pollutants	Potential Emissions	
	PPH	TPY
See emissions from Hot Oil Heater C4T-B-1600.		
Regulated Pollutants other than Criteria and HAP	Potential Emissions	
	PPH	TPY
NA	NA	NA

List the method(s) used to calculate the potential emissions (include dates of any stack tests conducted, versions of software used, source and dates of emission factors, etc.).

Engineering Estimate

Applicable Requirements
List all applicable requirements for this emission unit. For each applicable requirement, include the underlying rule/regulation citation and/or construction permit with the condition number. (*Note: Title V permit condition numbers alone are not the underlying applicable requirements*). If an emission limit is calculated based on the type of source and design capacity or if a standard is based on a design parameter, this information should also be included. NA
X Permit Shield
For all applicable requirements listed above, provide monitoring/testing/recordkeeping/reporting which shall be used to demonstrate compliance. If the method is based on a permit or rule, include the condition number or citation. (Note: Each requirement listed above must have an associated method of demonstrating compliance. If there is not already a required method in place, then a method must be proposed.) NA
Are you in compliance with all applicable requirements for this emission unit? X Yes ___No If no, complete the **Schedule of Compliance Form** as **ATTACHMENT F**.

ATTACHMENT E - Emission Unit Form

Emission Unit Description

Emission unit ID number:	**Emission unit name:**	**List any control devices associated with this emission unit:**
L4B-F-0200	CP-4 Off Spec Silo	L4A-M-0200

Provide a description of the emission unit (type, method of operation, design parameters, etc.):
CP-4 Off Spec Silo

Manufacturer:	**Model number:**	**Serial number:**
NA	NA	NA
Construction date:	**Installation date:**	**Modification date(s):**
NA	1996	NA

Design Capacity (examples: furnaces - tons/hr, tanks - gallons):
8’ x 32’ s/s

Maximum Hourly Throughput:	**Maximum Annual Throughput:**	**Maximum Operating Schedule:**
NA	NA	8,760 hr/yr

Fuel Usage Data **(fill out all applicable fields)**

Does this emission unit combust fuel? ___ Yes X No	**If yes, is it?** ___ Indirect Fired ___Direct Fired
Maximum design heat input and/or maximum horsepower rating: NA	**Type and Btu/hr rating of burners:** NA

List the primary fuel type(s) and if applicable, the secondary fuel type(s). For each fuel type listed, provide the maximum hourly and annual fuel usage for each.
NA

Describe each fuel expected to be used during the term of the permit.

Fuel Type	Max. Sulfur Content	Max. Ash Content	BTU Value
NA	NA	NA	NA

Emissions Data		
Criteria Pollutants	Potential Emissions	
	PPH	TPY
Carbon Monoxide (CO)	NA	NA
Nitrogen Oxides (NO_X)	NA	NA
Lead (Pb)	NA	NA
Particulate Matter ($PM_{2.5}$)	NA	NA
Particulate Matter (PM_{10})	NA	NA
Total Particulate Matter (TSP)	NA	NA
Sulfur Dioxide (SO_2)	NA	NA
Volatile Organic Compounds (VOC)	0.11	0.003
Hazardous Air Pollutants	Potential Emissions	
	PPH	TPY
NA	NA	NA
Regulated Pollutants other than Criteria and HAP	Potential Emissions	
	PPH	TPY
NA	NA	NA

List the method(s) used to calculate the potential emissions (include dates of any stack tests conducted, versions of software used, source and dates of emission factors, etc.).

Engineering Estimate

Applicable Requirements

List all applicable requirements for this emission unit. For each applicable requirement, include the underlying rule/regulation citation and/or construction permit with the condition number. (*Note: Title V permit condition numbers alone are not the underlying applicable requirements*). If an emission limit is calculated based on the type of source and design capacity or if a standard is based on a design parameter, this information should also be included.

R13-1650K §4.1.13; 45CSR §7-3.7:

- Storage structure required to have full enclosure and equipped with PM control devices.

X Permit Shield

For all applicable requirements listed above, provide monitoring/testing/recordkeeping/reporting which shall be used to demonstrate compliance. If the method is based on a permit or rule, include the condition number or citation. (Note: Each requirement listed above must have an associated method of demonstrating compliance. If there is not already a required method in place, then a method must be proposed.)

NA

Are you in compliance with all applicable requirements for this emission unit? X Yes ___No

If no, complete the **Schedule of Compliance Form** as **ATTACHMENT F**.

ATTACHMENT E - Emission Unit Form

Emission Unit Description

Emission unit ID number:	**Emission unit name:**	**List any control devices associated with this emission unit:**
C48-E-1210	CP-4 Pellet Dryer	NA

Provide a description of the emission unit (type, method of operation, design parameters, etc.):
CP-4 Pellet Dryer

Manufacturer:	**Model number:**	**Serial number:**
NA	NA	NA
Construction date:	**Installation date:**	**Modification date(s):**
NA	1996	NA

Design Capacity (examples: furnaces - tons/hr, tanks - gallons):
14,430 lb/hr

Maximum Hourly Throughput:	**Maximum Annual Throughput:**	**Maximum Operating Schedule:**
14,430 lb/hr	63,203 tpy	8,760 hr/yr

Fuel Usage Data **(fill out all applicable fields)**

Does this emission unit combust fuel? ___ Yes X No	**If yes, is it?** ___ Indirect Fired ___Direct Fired
Maximum design heat input and/or maximum horsepower rating: NA	**Type and Btu/hr rating of burners:** NA

List the primary fuel type(s) and if applicable, the secondary fuel type(s). For each fuel type listed, provide the maximum hourly and annual fuel usage for each.
NA

Describe each fuel expected to be used during the term of the permit.

Fuel Type	Max. Sulfur Content	Max. Ash Content	BTU Value
NA	NA	NA	NA

Emissions Data		
Criteria Pollutants	Potential Emissions	
	PPH	TPY
Carbon Monoxide (CO)	NA	NA
Nitrogen Oxides (NO_X)	NA	NA
Lead (Pb)	NA	NA
Particulate Matter ($PM_{2.5}$)	NA	NA
Particulate Matter (PM_{10})	NA	NA
Total Particulate Matter (TSP)	NA	NA
Sulfur Dioxide (SO_2)	NA	NA
Volatile Organic Compounds (VOC)	0.13	0.57
Hazardous Air Pollutants	Potential Emissions	
	PPH	TPY
Ethylene Glycol	0.07	0.29
Acetaldehyde	0.02	0.09
Regulated Pollutants other than Criteria and HAP	Potential Emissions	
	PPH	TPY
NA	NA	NA

List the method(s) used to calculate the potential emissions (include dates of any stack tests conducted, versions of software used, source and dates of emission factors, etc.).

Engineering Estimate

Applicable Requirements
List all applicable requirements for this emission unit. For each applicable requirement, include the underlying rule/regulation citation and/or construction permit with the condition number. (*Note: Title V permit condition numbers alone are not the underlying applicable requirements*). If an emission limit is calculated based on the type of source and design capacity or if a standard is based on a design parameter, this information should also be included. NA
X Permit Shield
For all applicable requirements listed above, provide monitoring/testing/recordkeeping/reporting which shall be used to demonstrate compliance. If the method is based on a permit or rule, include the condition number or citation. (Note: Each requirement listed above must have an associated method of demonstrating compliance. If there is not already a required method in place, then a method must be proposed.) NA
Are you in compliance with all applicable requirements for this emission unit? X Yes ___No If no, complete the **Schedule of Compliance Form** as **ATTACHMENT F**.

ATTACHMENT E - Emission Unit Form

Emission Unit Description

Emission unit ID number:	**Emission unit name:**	**List any control devices associated with this emission unit:**
C48-E-3210	CP-4 Pellet Dryer	NA

Provide a description of the emission unit (type, method of operation, design parameters, etc.):
CP-4 Pellet Dryer

Manufacturer:	**Model number:**	**Serial number:**
NA	NA	NA
Construction date:	**Installation date:**	**Modification date(s):**
NA	1996	NA

Design Capacity (examples: furnaces - tons/hr, tanks - gallons):
14,430 lb/hr

Maximum Hourly Throughput:	**Maximum Annual Throughput:**	**Maximum Operating Schedule:**
14,430 lb/hr	63,203 tpy	8,760 hr/yr

Fuel Usage Data **(fill out all applicable fields)**

Does this emission unit combust fuel? ___ Yes X No	**If yes, is it?** ___ Indirect Fired ___Direct Fired
Maximum design heat input and/or maximum horsepower rating: NA	**Type and Btu/hr rating of burners:** NA

List the primary fuel type(s) and if applicable, the secondary fuel type(s). For each fuel type listed, provide the maximum hourly and annual fuel usage for each.
NA

Describe each fuel expected to be used during the term of the permit.

Fuel Type	Max. Sulfur Content	Max. Ash Content	BTU Value
NA	NA	NA	NA

Emissions Data		
Criteria Pollutants	Potential Emissions	
	PPH	TPY
Carbon Monoxide (CO)	NA	NA
Nitrogen Oxides (NO_X)	NA	NA
Lead (Pb)	NA	NA
Particulate Matter ($PM_{2.5}$)	NA	NA
Particulate Matter (PM_{10})	NA	NA
Total Particulate Matter (TSP)	NA	NA
Sulfur Dioxide (SO_2)	NA	NA
Volatile Organic Compounds (VOC)	0.13	0.57
Hazardous Air Pollutants	Potential Emissions	
	PPH	TPY
Ethylene Glycol	0.07	0.29
Acetaldehyde	0.02	0.09
Regulated Pollutants other than Criteria and HAP	Potential Emissions	
	PPH	TPY
NA	NA	NA

List the method(s) used to calculate the potential emissions (include dates of any stack tests conducted, versions of software used, source and dates of emission factors, etc.).

Engineering Estimate

Applicable Requirements
List all applicable requirements for this emission unit. For each applicable requirement, include the underlying rule/regulation citation and/or construction permit with the condition number. (*Note: Title V permit condition numbers alone are not the underlying applicable requirements*). If an emission limit is calculated based on the type of source and design capacity or if a standard is based on a design parameter, this information should also be included. NA
X Permit Shield
For all applicable requirements listed above, provide monitoring/testing/recordkeeping/reporting which shall be used to demonstrate compliance. If the method is based on a permit or rule, include the condition number or citation. (Note: Each requirement listed above must have an associated method of demonstrating compliance. If there is not already a required method in place, then a method must be proposed.) NA
Are you in compliance with all applicable requirements for this emission unit? X Yes ___No If no, complete the **Schedule of Compliance Form** as **ATTACHMENT F**.

ATTACHMENT E - Emission Unit Form

Emission Unit Description

Emission unit ID number:	**Emission unit name:**	**List any control devices associated with this emission unit:**
C48-E-5210	CP-4 Pellet Dryer	NA

Provide a description of the emission unit (type, method of operation, design parameters, etc.):
CP-4 Pellet Dryer

Manufacturer:	**Model number:**	**Serial number:**
NA	NA	NA
Construction date:	**Installation date:**	**Modification date(s):**
NA	1996	NA

Design Capacity (examples: furnaces - tons/hr, tanks - gallons):
14,430 lb/hr

Maximum Hourly Throughput:	**Maximum Annual Throughput:**	**Maximum Operating Schedule:**
14,430 lb/hr	63,203 tpy	8,760 hr/yr

Fuel Usage Data **(fill out all applicable fields)**

Does this emission unit combust fuel? ___ Yes X No	**If yes, is it?** ___ Indirect Fired ___Direct Fired
Maximum design heat input and/or maximum horsepower rating: NA	**Type and Btu/hr rating of burners:** NA

List the primary fuel type(s) and if applicable, the secondary fuel type(s). For each fuel type listed, provide the maximum hourly and annual fuel usage for each.
NA

Describe each fuel expected to be used during the term of the permit.

Fuel Type	Max. Sulfur Content	Max. Ash Content	BTU Value
NA	NA	NA	NA

Emissions Data		
Criteria Pollutants	Potential Emissions	
	PPH	TPY
Carbon Monoxide (CO)	NA	NA
Nitrogen Oxides (NO_X)	NA	NA
Lead (Pb)	NA	NA
Particulate Matter ($PM_{2.5}$)	NA	NA
Particulate Matter (PM_{10})	NA	NA
Total Particulate Matter (TSP)	NA	NA
Sulfur Dioxide (SO_2)	NA	NA
Volatile Organic Compounds (VOC)	0.13	0.57
Hazardous Air Pollutants	Potential Emissions	
	PPH	TPY
Ethylene Glycol	0.07	0.29
Acetaldehyde	0.02	0.09
Regulated Pollutants other than Criteria and HAP	Potential Emissions	
	PPH	TPY
NA	NA	NA

List the method(s) used to calculate the potential emissions (include dates of any stack tests conducted, versions of software used, source and dates of emission factors, etc.).

Engineering Estimate

Applicable Requirements
List all applicable requirements for this emission unit. For each applicable requirement, include the underlying rule/regulation citation and/or construction permit with the condition number. (*Note: Title V permit condition numbers alone are not the underlying applicable requirements*). If an emission limit is calculated based on the type of source and design capacity or if a standard is based on a design parameter, this information should also be included. NA
X Permit Shield
For all applicable requirements listed above, provide monitoring/testing/recordkeeping/reporting which shall be used to demonstrate compliance. If the method is based on a permit or rule, include the condition number or citation. (Note: Each requirement listed above must have an associated method of demonstrating compliance. If there is not already a required method in place, then a method must be proposed.) NA
Are you in compliance with all applicable requirements for this emission unit? X Yes ___No If no, complete the **Schedule of Compliance Form** as **ATTACHMENT F**.

ATTACHMENT E - Emission Unit Form

Emission Unit Description

Emission unit ID number:	**Emission unit name:**	**List any control devices associated with this emission unit:**
L24-M-4120	CP-4 Pellet Filler Receiver	NA

Provide a description of the emission unit (type, method of operation, design parameters, etc.):
CP-4 Pellet Filler Receiver

Manufacturer:	**Model number:**	**Serial number:**
NA	NA	NA
Construction date:	**Installation date:**	**Modification date(s):**
NA	1993	NA

Design Capacity (examples: furnaces - tons/hr, tanks - gallons):
318 ft^2

Maximum Hourly Throughput:	**Maximum Annual Throughput:**	**Maximum Operating Schedule:**
NA	NA	8,760 hr/yr

Fuel Usage Data **(fill out all applicable fields)**

Does this emission unit combust fuel? ___ Yes X No	**If yes, is it?** ___ Indirect Fired ___Direct Fired
Maximum design heat input and/or maximum horsepower rating: NA	**Type and Btu/hr rating of burners:** NA

List the primary fuel type(s) and if applicable, the secondary fuel type(s). For each fuel type listed, provide the maximum hourly and annual fuel usage for each.
NA

Describe each fuel expected to be used during the term of the permit.

Fuel Type	Max. Sulfur Content	Max. Ash Content	BTU Value
NA	NA	NA	NA

Emissions Data		
Criteria Pollutants	Potential Emissions	
	PPH	TPY
Carbon Monoxide (CO)	NA	NA
Nitrogen Oxides (NO_X)	NA	NA
Lead (Pb)	NA	NA
Particulate Matter ($PM_{2.5}$)	NA	NA
Particulate Matter (PM_{10})	0.004	0.02
Total Particulate Matter (TSP)	0.004	0.02
Sulfur Dioxide (SO_2)	NA	NA
Volatile Organic Compounds (VOC)	NA	NA
Hazardous Air Pollutants	Potential Emissions	
	PPH	TPY
NA	NA	NA
Regulated Pollutants other than Criteria and HAP	Potential Emissions	
	PPH	TPY
NA	NA	NA

List the method(s) used to calculate the potential emissions (include dates of any stack tests conducted, versions of software used, source and dates of emission factors, etc.).

Engineering Estimate

Applicable Requirements
List all applicable requirements for this emission unit. For each applicable requirement, include the underlying rule/regulation citation and/or construction permit with the condition number. (*Note: Title V permit condition numbers alone are not the underlying applicable requirements*). If an emission limit is calculated based on the type of source and design capacity or if a standard is based on a design parameter, this information should also be included. NA
X Permit Shield
For all applicable requirements listed above, provide monitoring/testing/recordkeeping/reporting which shall be used to demonstrate compliance. If the method is based on a permit or rule, include the condition number or citation. (Note: Each requirement listed above must have an associated method of demonstrating compliance. If there is not already a required method in place, then a method must be proposed.) NA
Are you in compliance with all applicable requirements for this emission unit? X Yes ___No If no, complete the **Schedule of Compliance Form** as **ATTACHMENT F**.

ATTACHMENT E - Emission Unit Form

Emission Unit Description

Emission unit ID number:	**Emission unit name:**	**List any control devices associated with this emission unit:**
C41-F-3220	CP-3 R/1 & R/2 Separator	C4T-B-1600

Provide a description of the emission unit (type, method of operation, design parameters, etc.):
CP-3 R/1 & R/2 Separator

Manufacturer:	**Model number:**	**Serial number:**
NA	NA	NA
Construction date:	**Installation date:**	**Modification date(s):**
NA	1996	NA

Design Capacity (examples: furnaces - tons/hr, tanks - gallons):
90 gallons

Maximum Hourly Throughput:	**Maximum Annual Throughput:**	**Maximum Operating Schedule:**
5,100 lb/hr	22,338 tpy	8,760 hr/yr

Fuel Usage Data **(fill out all applicable fields)**

Does this emission unit combust fuel? ___ Yes X No	**If yes, is it?** ___ Indirect Fired ___Direct Fired
Maximum design heat input and/or maximum horsepower rating: NA	**Type and Btu/hr rating of burners:** NA

List the primary fuel type(s) and if applicable, the secondary fuel type(s). For each fuel type listed, provide the maximum hourly and annual fuel usage for each.
NA

Describe each fuel expected to be used during the term of the permit.

Fuel Type	Max. Sulfur Content	Max. Ash Content	BTU Value
NA	NA	NA	NA

Emissions Data		
Criteria Pollutants	Potential Emissions	
	PPH	TPY
Carbon Monoxide (CO)	See emissions from Hot Oil Heater C4T-B-1600.	
Nitrogen Oxides (NO_X)		
Lead (Pb)		
Particulate Matter ($PM_{2.5}$)		
Particulate Matter (PM_{10})		
Total Particulate Matter (TSP)		
Sulfur Dioxide (SO_2)		
Volatile Organic Compounds (VOC)		
Hazardous Air Pollutants	Potential Emissions	
	PPH	TPY
See emissions from Hot Oil Heater C4T-B-1600.		
Regulated Pollutants other than Criteria and HAP	Potential Emissions	
	PPH	TPY
NA	NA	NA

List the method(s) used to calculate the potential emissions (include dates of any stack tests conducted, versions of software used, source and dates of emission factors, etc.).

Engineering Estimate

Applicable Requirements
List all applicable requirements for this emission unit. For each applicable requirement, include the underlying rule/regulation citation and/or <u>construction permit</u> with the condition number. (*Note: Title V permit condition numbers alone are not the underlying applicable requirements*). If an emission limit is calculated based on the type of source and design capacity or if a standard is based on a design parameter, this information should also be included. **40CFR §63.1316(b)(2)(i); 40CFR §63.1316(b)(2)(i)(A); R13-1650K §4.1.15:** • Organic HAP emissions from all continuous process vents associated with esterification vessels ≤ 0.04 kg organic HAP per Mg of product.
<u>X</u> Permit Shield
For all applicable requirements listed above, provide monitoring/testing/recordkeeping/reporting which shall be used to demonstrate compliance. If the method is based on a permit or rule, include the condition number or citation. (Note: Each requirement listed above must have an associated method of demonstrating compliance. If there is not already a required method in place, then a method must be proposed.) *Monitoring:* • Control device comply with applicable provisions of 40CFR §63.114.
Are you in compliance with all applicable requirements for this emission unit? <u>X</u> Yes ___No If no, complete the **Schedule of Compliance Form** as **ATTACHMENT F**.

ATTACHMENT E - Emission Unit Form

Emission Unit Description

Emission unit ID number:	**Emission unit name:**	**List any control devices associated with this emission unit:**
C4L-F-3140	CP-4 R/1 EG Charge Tank	NA

Provide a description of the emission unit (type, method of operation, design parameters, etc.):
CP-4 R/1 EG Charge Tank

Manufacturer:	**Model number:**	**Serial number:**
NA	NA	NA
Construction date:	**Installation date:**	**Modification date(s):**
NA	1996	NA

Design Capacity (examples: furnaces - tons/hr, tanks - gallons):
1,742 gallons

Maximum Hourly Throughput:	**Maximum Annual Throughput:**	**Maximum Operating Schedule:**
3,360 gph	6.2 mmgal/yr	8,760 hr/yr

Fuel Usage Data **(fill out all applicable fields)**

Does this emission unit combust fuel? ___ Yes X No	**If yes, is it?** ___ Indirect Fired ___Direct Fired
Maximum design heat input and/or maximum horsepower rating: NA	**Type and Btu/hr rating of burners:** NA

List the primary fuel type(s) and if applicable, the secondary fuel type(s). For each fuel type listed, provide the maximum hourly and annual fuel usage for each.
NA

Describe each fuel expected to be used during the term of the permit.

Fuel Type	Max. Sulfur Content	Max. Ash Content	BTU Value
NA	NA	NA	NA

Emissions Data		
Criteria Pollutants	Potential Emissions	
	PPH	TPY
Carbon Monoxide (CO)	NA	NA
Nitrogen Oxides (NO_X)	NA	NA
Lead (Pb)	NA	NA
Particulate Matter ($PM_{2.5}$)	NA	NA
Particulate Matter (PM_{10})	NA	NA
Total Particulate Matter (TSP)	NA	NA
Sulfur Dioxide (SO_2)	NA	NA
Volatile Organic Compounds (VOC)	Emissions included with R/1 Recupic Charge Tank C4L-F-3180.	
Hazardous Air Pollutants	Potential Emissions	
	PPH	TPY
Ethylene Glycol	Emissions included with R/1 Recupic Charge Tank C4L-F-3180.	
Regulated Pollutants other than Criteria and HAP	Potential Emissions	
	PPH	TPY
NA	NA	NA

List the method(s) used to calculate the potential emissions (include dates of any stack tests conducted, versions of software used, source and dates of emission factors, etc.).

Engineering Estimate

Applicable Requirements
List all applicable requirements for this emission unit. For each applicable requirement, include the underlying rule/regulation citation and/or <u>construction permit</u> with the condition number. (*Note: Title V permit condition numbers alone are not the underlying applicable requirements*). If an emission limit is calculated based on the type of source and design capacity or if a standard is based on a design parameter, this information should also be included. **40CFR §63.1316(b)(2)(i); 40CFR §63.1316(b)(2)(i)(A); R13-1650K §4.1.15:** • Organic HAP emissions from all continuous process vents associated with esterification vessels ≤ 0.04 kg organic HAP per Mg of product.
<u>X</u> Permit Shield
For all applicable requirements listed above, provide monitoring/testing/recordkeeping/reporting which shall be used to demonstrate compliance. If the method is based on a permit or rule, include the condition number or citation. (Note: Each requirement listed above must have an associated method of demonstrating compliance. If there is not already a required method in place, then a method must be proposed.) *Monitoring:* • Control device comply with applicable provisions of 40CFR §63.114.
Are you in compliance with all applicable requirements for this emission unit? <u>X</u> Yes ___No If no, complete the **Schedule of Compliance Form** as **ATTACHMENT F**.

ATTACHMENT E - Emission Unit Form

Emission Unit Description

Emission unit ID number:	**Emission unit name:**	**List any control devices associated with this emission unit:**
C4L-F-3180	CP-4 R/1 Recupic EG Charge Tank	NA

Provide a description of the emission unit (type, method of operation, design parameters, etc.):
CP-4 R/1 Recupic EG Charge Tank

Manufacturer:	**Model number:**	**Serial number:**
NA	NA	NA
Construction date:	**Installation date:**	**Modification date(s):**
NA	1994	NA

Design Capacity (examples: furnaces - tons/hr, tanks - gallons):
1,742 gallons

Maximum Hourly Throughput:	**Maximum Annual Throughput:**	**Maximum Operating Schedule:**
3,360 gph	6.2 mmgal/yr	8,760 hr/yr

Fuel Usage Data **(fill out all applicable fields)**

Does this emission unit combust fuel? ___ Yes X No	**If yes, is it?** ___ Indirect Fired ___Direct Fired
Maximum design heat input and/or maximum horsepower rating: NA	**Type and Btu/hr rating of burners:** NA

List the primary fuel type(s) and if applicable, the secondary fuel type(s). For each fuel type listed, provide the maximum hourly and annual fuel usage for each.
NA

Describe each fuel expected to be used during the term of the permit.

Fuel Type	Max. Sulfur Content	Max. Ash Content	BTU Value
NA	NA	NA	NA

Emissions Data		
Criteria Pollutants	Potential Emissions	
	PPH	TPY
Carbon Monoxide (CO)	NA	NA
Nitrogen Oxides (NO_X)	NA	NA
Lead (Pb)	NA	NA
Particulate Matter ($PM_{2.5}$)	NA	NA
Particulate Matter (PM_{10})	NA	NA
Total Particulate Matter (TSP)	NA	NA
Sulfur Dioxide (SO_2)	NA	NA
Volatile Organic Compounds (VOC)	0.09	0.42
Hazardous Air Pollutants	Potential Emissions	
	PPH	TPY
Ethylene Glycol	0.09	0.42
Regulated Pollutants other than Criteria and HAP	Potential Emissions	
	PPH	TPY
NA	NA	NA

List the method(s) used to calculate the potential emissions (include dates of any stack tests conducted, versions of software used, source and dates of emission factors, etc.).

Engineering Estimate

Applicable Requirements

List all applicable requirements for this emission unit. For each applicable requirement, include the underlying rule/regulation citation and/or construction permit with the condition number. (*Note: Title V permit condition numbers alone are not the underlying applicable requirements*). If an emission limit is calculated based on the type of source and design capacity or if a standard is based on a design parameter, this information should also be included.

40CFR §63.1316(b)(2)(i); 40CFR §63.1316(b)(2)(i)(A); R13-1650K §4.1.15:

- Organic HAP emissions from all continuous process vents associated with polymerization reactor sections ≤ 0.02 kg organic HAP per Mg of product.

X Permit Shield

For all applicable requirements listed above, provide monitoring/testing/recordkeeping/reporting which shall be used to demonstrate compliance. If the method is based on a permit or rule, include the condition number or citation. (Note: Each requirement listed above must have an associated method of demonstrating compliance. If there is not already a required method in place, then a method must be proposed.)

Monitoring:

- Control device comply with applicable provisions of 40CFR §63.114.

Are you in compliance with all applicable requirements for this emission unit? X Yes ___No

If no, complete the **Schedule of Compliance Form** as **ATTACHMENT F**.

ATTACHMENT E - Emission Unit Form

Emission Unit Description

Emission unit ID number:	**Emission unit name:**	**List any control devices associated with this emission unit:**
C41-E-3020	CP-4 R/1 System	C4T-B-1600

Provide a description of the emission unit (type, method of operation, design parameters, etc.):
CP-4 R/1 System

Manufacturer:	**Model number:**	**Serial number:**
NA	NA	NA
Construction date:	**Installation date:**	**Modification date(s):**
NA	1994	NA

Design Capacity (examples: furnaces - tons/hr, tanks - gallons):
2,970 gallons

Maximum Hourly Throughput:	**Maximum Annual Throughput:**	**Maximum Operating Schedule:**
40,000 lb/hr	157,680 tpy	8,760 hr/yr

Fuel Usage Data **(fill out all applicable fields)**

Does this emission unit combust fuel? ___ Yes X No	**If yes, is it?** ___ Indirect Fired ___Direct Fired
Maximum design heat input and/or maximum horsepower rating: NA	**Type and Btu/hr rating of burners:** NA

List the primary fuel type(s) and if applicable, the secondary fuel type(s). For each fuel type listed, provide the maximum hourly and annual fuel usage for each.
NA

Describe each fuel expected to be used during the term of the permit.

Fuel Type	Max. Sulfur Content	Max. Ash Content	BTU Value
NA	NA	NA	NA

Emissions Data		
Criteria Pollutants	Potential Emissions	
	PPH	TPY
Carbon Monoxide (CO)	See emissions from Hot Oil Heater C4T-B-1600.	
Nitrogen Oxides (NO_X)		
Lead (Pb)		
Particulate Matter ($PM_{2.5}$)		
Particulate Matter (PM_{10})		
Total Particulate Matter (TSP)		
Sulfur Dioxide (SO_2)		
Volatile Organic Compounds (VOC)		
Hazardous Air Pollutants	Potential Emissions	
	PPH	TPY
See emissions from Hot Oil Heater C4T-B-1600.		
Regulated Pollutants other than Criteria and HAP	Potential Emissions	
	PPH	TPY
NA	NA	NA

List the method(s) used to calculate the potential emissions (include dates of any stack tests conducted, versions of software used, source and dates of emission factors, etc.).

Engineering Estimate

Applicable Requirements

List all applicable requirements for this emission unit. For each applicable requirement, include the underlying rule/regulation citation and/or construction permit with the condition number. (*Note: Title V permit condition numbers alone are not the underlying applicable requirements*). If an emission limit is calculated based on the type of source and design capacity or if a standard is based on a design parameter, this information should also be included.

40CFR §63.1316(b)(2)(i); 40CFR §63.1316(b)(2)(i)(A); R13-1650K §4.1.15:

- Organic HAP emissions from all continuous process vents associated with esterification vessels ≤ 0.04 kg organic HAP per Mg of product.

X Permit Shield

For all applicable requirements listed above, provide monitoring/testing/recordkeeping/reporting which shall be used to demonstrate compliance. If the method is based on a permit or rule, include the condition number or citation. (Note: Each requirement listed above must have an associated method of demonstrating compliance. If there is not already a required method in place, then a method must be proposed.)

Monitoring:

- Control device comply with applicable provisions of 40CFR §63.114.

Are you in compliance with all applicable requirements for this emission unit? X Yes ___No

If no, complete the **Schedule of Compliance Form** as **ATTACHMENT F**.

ATTACHMENT E - Emission Unit Form

Emission Unit Description

Emission unit ID number:	**Emission unit name:**	**List any control devices associated with this emission unit:**
C42-E-2050	CP-4 R/2 System	C4T-B-1600

Provide a description of the emission unit (type, method of operation, design parameters, etc.):
CP-4 R/2 System

Manufacturer:	**Model number:**	**Serial number:**
NA	NA	NA
Construction date:	**Installation date:**	**Modification date(s):**
NA	1996	NA

Design Capacity (examples: furnaces - tons/hr, tanks - gallons):
2,970 gallons

Maximum Hourly Throughput:	**Maximum Annual Throughput:**	**Maximum Operating Schedule:**
40,000 lb/hr	157,680 tpy	8,760 hr/yr

Fuel Usage Data **(fill out all applicable fields)**

Does this emission unit combust fuel? ___ Yes X No	**If yes, is it?** ___ Indirect Fired ___Direct Fired
Maximum design heat input and/or maximum horsepower rating: NA	**Type and Btu/hr rating of burners:** NA

List the primary fuel type(s) and if applicable, the secondary fuel type(s). For each fuel type listed, provide the maximum hourly and annual fuel usage for each.
NA

Describe each fuel expected to be used during the term of the permit.

Fuel Type	Max. Sulfur Content	Max. Ash Content	BTU Value
NA	NA	NA	NA

Emissions Data		
Criteria Pollutants	Potential Emissions	
	PPH	TPY
Carbon Monoxide (CO)	See emissions from Hot Oil Heater C4T-B-1600.	
Nitrogen Oxides (NO_X)		
Lead (Pb)		
Particulate Matter ($PM_{2.5}$)		
Particulate Matter (PM_{10})		
Total Particulate Matter (TSP)		
Sulfur Dioxide (SO_2)		
Volatile Organic Compounds (VOC)		
Hazardous Air Pollutants	Potential Emissions	
	PPH	TPY
See emissions from Hot Oil Heater C4T-B-1600.		
Regulated Pollutants other than Criteria and HAP	Potential Emissions	
	PPH	TPY
NA	NA	NA

List the method(s) used to calculate the potential emissions (include dates of any stack tests conducted, versions of software used, source and dates of emission factors, etc.).

Engineering Estimate

Applicable Requirements

List all applicable requirements for this emission unit. For each applicable requirement, include the underlying rule/regulation citation and/or construction permit with the condition number. (*Note: Title V permit condition numbers alone are not the underlying applicable requirements*). If an emission limit is calculated based on the type of source and design capacity or if a standard is based on a design parameter, this information should also be included.

40CFR §63.1316(b)(2)(i); 40CFR §63.1316(b)(2)(i)(A); R13-1650K §4.1.15:

- Organic HAP emissions from all continuous process vents associated with esterification vessels ≤ 0.04 kg organic HAP per Mg of product.

X Permit Shield

For all applicable requirements listed above, provide monitoring/testing/recordkeeping/reporting which shall be used to demonstrate compliance. If the method is based on a permit or rule, include the condition number or citation. (Note: Each requirement listed above must have an associated method of demonstrating compliance. If there is not already a required method in place, then a method must be proposed.)

Monitoring:

- Control device comply with applicable provisions of 40CFR §63.114.

Are you in compliance with all applicable requirements for this emission unit? X Yes ___No

If no, complete the **Schedule of Compliance Form** as **ATTACHMENT F**.

ATTACHMENT E - Emission Unit Form

Emission Unit Description

Emission unit ID number:	**Emission unit name:**	**List any control devices associated with this emission unit:**
C43-F-2260	CP-4 R/3 Condensate Tank	C4T-B-1600

Provide a description of the emission unit (type, method of operation, design parameters, etc.):
CP-4 R/3 Condensate Tank

Manufacturer:	**Model number:**	**Serial number:**
NA	NA	NA
Construction date:	**Installation date:**	**Modification date(s):**
NA	1996	NA

Design Capacity (examples: furnaces - tons/hr, tanks - gallons):
1,660 gallons

Maximum Hourly Throughput:	**Maximum Annual Throughput:**	**Maximum Operating Schedule:**
31,620 gph	277 mmgpy	8,760 hr/yr

Fuel Usage Data **(fill out all applicable fields)**

Does this emission unit combust fuel? ___ Yes X No	**If yes, is it?** ___ Indirect Fired ___Direct Fired
Maximum design heat input and/or maximum horsepower rating: NA	**Type and Btu/hr rating of burners:** NA

List the primary fuel type(s) and if applicable, the secondary fuel type(s). For each fuel type listed, provide the maximum hourly and annual fuel usage for each.
NA

Describe each fuel expected to be used during the term of the permit.

Fuel Type	Max. Sulfur Content	Max. Ash Content	BTU Value
NA	NA	NA	NA

Emissions Data		
Criteria Pollutants	Potential Emissions	
	PPH	TPY
Carbon Monoxide (CO)	See emissions from Hot Oil Heater C4T-B-1600.	
Nitrogen Oxides (NO_X)		
Lead (Pb)		
Particulate Matter ($PM_{2.5}$)		
Particulate Matter (PM_{10})		
Total Particulate Matter (TSP)		
Sulfur Dioxide (SO_2)		
Volatile Organic Compounds (VOC)		
Hazardous Air Pollutants	Potential Emissions	
	PPH	TPY
See emissions from Hot Oil Heater C4T-B-1600.		
Regulated Pollutants other than Criteria and HAP	Potential Emissions	
	PPH	TPY
NA	NA	NA

List the method(s) used to calculate the potential emissions (include dates of any stack tests conducted, versions of software used, source and dates of emission factors, etc.).

Engineering Estimate

Applicable Requirements

List all applicable requirements for this emission unit. For each applicable requirement, include the underlying rule/regulation citation and/or construction permit with the condition number. (*Note: Title V permit condition numbers alone are not the underlying applicable requirements*). If an emission limit is calculated based on the type of source and design capacity or if a standard is based on a design parameter, this information should also be included.

40CFR §63.1316(b)(2)(i); 40CFR §63.1316(b)(2)(i)(A); R13-1650K §4.1.15:

- Organic HAP emissions from all continuous process vents associated with polymerization reactor sections ≤ 0.02 kg organic HAP per Mg of product.

X Permit Shield

For all applicable requirements listed above, provide monitoring/testing/recordkeeping/reporting which shall be used to demonstrate compliance. If the method is based on a permit or rule, include the condition number or citation. (Note: Each requirement listed above must have an associated method of demonstrating compliance. If there is not already a required method in place, then a method must be proposed.)

Monitoring:

- Control device comply with applicable provisions of 40CFR §63.114.

Are you in compliance with all applicable requirements for this emission unit? X Yes ___No

If no, complete the **Schedule of Compliance Form** as **ATTACHMENT F**.

ATTACHMENT E - Emission Unit Form

Emission Unit Description

Emission unit ID number:	**Emission unit name:**	**List any control devices associated with this emission unit:**
C43-E-3250	CP-4 R/3 System	C4T-B-1600

Provide a description of the emission unit (type, method of operation, design parameters, etc.):
CP-4 R/3 System

Manufacturer:	**Model number:**	**Serial number:**
NA	NA	NA
Construction date:	**Installation date:**	**Modification date(s):**
NA	1996	NA

Design Capacity (examples: furnaces - tons/hr, tanks - gallons):
2,970 gallons

Maximum Hourly Throughput:	**Maximum Annual Throughput:**	**Maximum Operating Schedule:**
40,000 lb/hr	157,680 tpy	8,760 hr/yr

Fuel Usage Data **(fill out all applicable fields)**

Does this emission unit combust fuel? ___ Yes X No	**If yes, is it?** ___ Indirect Fired ___Direct Fired
Maximum design heat input and/or maximum horsepower rating: NA	**Type and Btu/hr rating of burners:** NA

List the primary fuel type(s) and if applicable, the secondary fuel type(s). For each fuel type listed, provide the maximum hourly and annual fuel usage for each.
NA

Describe each fuel expected to be used during the term of the permit.

Fuel Type	Max. Sulfur Content	Max. Ash Content	BTU Value
NA	NA	NA	NA

Emissions Data		
Criteria Pollutants	Potential Emissions	
	PPH	TPY
Carbon Monoxide (CO)	See emissions from Hot Oil Heater C4T-B-1600.	
Nitrogen Oxides (NO_X)		
Lead (Pb)		
Particulate Matter ($PM_{2.5}$)		
Particulate Matter (PM_{10})		
Total Particulate Matter (TSP)		
Sulfur Dioxide (SO_2)		
Volatile Organic Compounds (VOC)		
Hazardous Air Pollutants	Potential Emissions	
	PPH	TPY
See emissions from Hot Oil Heater C4T-B-1600.		
Regulated Pollutants other than Criteria and HAP	Potential Emissions	
	PPH	TPY
NA	NA	NA

List the method(s) used to calculate the potential emissions (include dates of any stack tests conducted, versions of software used, source and dates of emission factors, etc.).

Engineering Estimate

Applicable Requirements

List all applicable requirements for this emission unit. For each applicable requirement, include the underlying rule/regulation citation and/or construction permit with the condition number. (*Note: Title V permit condition numbers alone are not the underlying applicable requirements*). If an emission limit is calculated based on the type of source and design capacity or if a standard is based on a design parameter, this information should also be included.

40CFR §63.1316(b)(2)(i); 40CFR §63.1316(b)(2)(i)(A); R13-1650K §4.1.15:

- Organic HAP emissions from all continuous process vents associated with polymerization reactor sections ≤ 0.02 kg organic HAP per Mg of product.

X Permit Shield

For all applicable requirements listed above, provide monitoring/testing/recordkeeping/reporting which shall be used to demonstrate compliance. If the method is based on a permit or rule, include the condition number or citation. (Note: Each requirement listed above must have an associated method of demonstrating compliance. If there is not already a required method in place, then a method must be proposed.)

Monitoring:

- Control device comply with applicable provisions of 40CFR §63.114.

Are you in compliance with all applicable requirements for this emission unit? X Yes ___No

If no, complete the **Schedule of Compliance Form** as **ATTACHMENT F**.

ATTACHMENT E - Emission Unit Form

Emission Unit Description

Emission unit ID number:	**Emission unit name:**	**List any control devices associated with this emission unit:**
C4U-F-1710	CP-4 R/3 TEG Bath	NA

Provide a description of the emission unit (type, method of operation, design parameters, etc.):
CP-4 R/3 TEG Bath

Manufacturer:	**Model number:**	**Serial number:**
NA	NA	NA
Construction date:	**Installation date:**	**Modification date(s):**
NA	1994	NA

Design Capacity (examples: furnaces - tons/hr, tanks - gallons):
32” x 60” t/t

Maximum Hourly Throughput:	**Maximum Annual Throughput:**	**Maximum Operating Schedule:**
600 gph	3,150 gpy	8,760 hr/yr

Fuel Usage Data **(fill out all applicable fields)**

Does this emission unit combust fuel? ___ Yes X No	**If yes, is it?** ___ Indirect Fired ___Direct Fired
Maximum design heat input and/or maximum horsepower rating: NA	**Type and Btu/hr rating of burners:** NA

List the primary fuel type(s) and if applicable, the secondary fuel type(s). For each fuel type listed, provide the maximum hourly and annual fuel usage for each.
NA

Describe each fuel expected to be used during the term of the permit.

Fuel Type	Max. Sulfur Content	Max. Ash Content	BTU Value
NA	NA	NA	NA

Emissions Data		
Criteria Pollutants	Potential Emissions	
	PPH	TPY
Carbon Monoxide (CO)	NA	NA
Nitrogen Oxides (NO_X)	NA	NA
Lead (Pb)	NA	NA
Particulate Matter ($PM_{2.5}$)	NA	NA
Particulate Matter (PM_{10})	NA	NA
Total Particulate Matter (TSP)	NA	NA
Sulfur Dioxide (SO_2)	NA	NA
Volatile Organic Compounds (VOC)	0.001	0.001
Hazardous Air Pollutants	Potential Emissions	
	PPH	TPY
NA	NA	NA
Regulated Pollutants other than Criteria and HAP	Potential Emissions	
	PPH	TPY
NA	NA	NA

List the method(s) used to calculate the potential emissions (include dates of any stack tests conducted, versions of software used, source and dates of emission factors, etc.).

Engineering Estimate

Applicable Requirements
List all applicable requirements for this emission unit. For each applicable requirement, include the underlying rule/regulation citation and/or construction permit with the condition number. (*Note: Title V permit condition numbers alone are not the underlying applicable requirements*). If an emission limit is calculated based on the type of source and design capacity or if a standard is based on a design parameter, this information should also be included. NA
X Permit Shield
For all applicable requirements listed above, provide monitoring/testing/recordkeeping/reporting which shall be used to demonstrate compliance. If the method is based on a permit or rule, include the condition number or citation. (Note: Each requirement listed above must have an associated method of demonstrating compliance. If there is not already a required method in place, then a method must be proposed.) NA
Are you in compliance with all applicable requirements for this emission unit? X Yes ___No If no, complete the **Schedule of Compliance Form** as **ATTACHMENT F**.

ATTACHMENT E - Emission Unit Form

Emission Unit Description

Emission unit ID number:	**Emission unit name:**	**List any control devices associated with this emission unit:**
C44-E-3280	CP-4 R/4 System	C4T-B-1600

Provide a description of the emission unit (type, method of operation, design parameters, etc.):
CP-3 R/4A System

Manufacturer:	**Model number:**	**Serial number:**
NA	NA	NA
Construction date:	**Installation date:**	**Modification date(s):**
NA	1996	NA

Design Capacity (examples: furnaces - tons/hr, tanks - gallons):
26,000 gallons

Maximum Hourly Throughput:	**Maximum Annual Throughput:**	**Maximum Operating Schedule:**
40,000 lb/hr	157,680 tpy	8,760 hr/yr

Fuel Usage Data **(fill out all applicable fields)**

Does this emission unit combust fuel? ___ Yes X No	**If yes, is it?** ___ Indirect Fired ___Direct Fired
Maximum design heat input and/or maximum horsepower rating: NA	**Type and Btu/hr rating of burners:** NA

List the primary fuel type(s) and if applicable, the secondary fuel type(s). For each fuel type listed, provide the maximum hourly and annual fuel usage for each.
NA

Describe each fuel expected to be used during the term of the permit.

Fuel Type	Max. Sulfur Content	Max. Ash Content	BTU Value
NA	NA	NA	NA

Emissions Data		
Criteria Pollutants	Potential Emissions	
	PPH	TPY
Carbon Monoxide (CO)	See emissions from Hot Oil Heater C4T-B-1600.	
Nitrogen Oxides (NO_X)		
Lead (Pb)		
Particulate Matter ($PM_{2.5}$)		
Particulate Matter (PM_{10})		
Total Particulate Matter (TSP)		
Sulfur Dioxide (SO_2)		
Volatile Organic Compounds (VOC)		
Hazardous Air Pollutants	Potential Emissions	
	PPH	TPY
See emissions from Hot Oil Heater C4T-B-1600.		
Regulated Pollutants other than Criteria and HAP	Potential Emissions	
	PPH	TPY
NA	NA	NA

List the method(s) used to calculate the potential emissions (include dates of any stack tests conducted, versions of software used, source and dates of emission factors, etc.).

Engineering Estimate

Applicable Requirements
List all applicable requirements for this emission unit. For each applicable requirement, include the underlying rule/regulation citation and/or <u>construction permit</u> with the condition number. (*Note: Title V permit condition numbers alone are not the underlying applicable requirements*). If an emission limit is calculated based on the type of source and design capacity or if a standard is based on a design parameter, this information should also be included. **40CFR §63.1316(b)(2)(i); 40CFR §63.1316(b)(2)(i)(A); R13-1650K §4.1.15:** Organic HAP emissions from all continuous process vents associated with polymerization reactor
<u>X</u> Permit Shield
For all applicable requirements listed above, provide monitoring/testing/recordkeeping/reporting which shall be used to demonstrate compliance. If the method is based on a permit or rule, include the condition number or citation. (Note: Each requirement listed above must have an associated method of demonstrating compliance. If there is not already a required method in place, then a method must be proposed.) *Monitoring:* • Control device comply with applicable provisions of 40CFR §63.114.
Are you in compliance with all applicable requirements for this emission unit? <u>X</u> Yes ___No If no, complete the **Schedule of Compliance Form** as **ATTACHMENT F**.

ATTACHMENT E - Emission Unit Form

Emission Unit Description

Emission unit ID number:	**Emission unit name:**	**List any control devices associated with this emission unit:**
C4L-A-1070	CP-4 Recupic EG Tank	NA

Provide a description of the emission unit (type, method of operation, design parameters, etc.):
CP-4 Recupic EG Tank

Manufacturer:	**Model number:**	**Serial number:**
NA	NA	NA
Construction date:	**Installation date:**	**Modification date(s):**
NA	1996	NA

Design Capacity (examples: furnaces - tons/hr, tanks - gallons):
12,700 gallons

Maximum Hourly Throughput:	**Maximum Annual Throughput:**	**Maximum Operating Schedule:**
420 gph	3.7 mmgpy	8,760 hr/yr

Fuel Usage Data **(fill out all applicable fields)**

Does this emission unit combust fuel? ___ Yes X No	**If yes, is it?** ___ Indirect Fired ___Direct Fired
Maximum design heat input and/or maximum horsepower rating: NA	**Type and Btu/hr rating of burners:** NA

List the primary fuel type(s) and if applicable, the secondary fuel type(s). For each fuel type listed, provide the maximum hourly and annual fuel usage for each.
NA

Describe each fuel expected to be used during the term of the permit.

Fuel Type	Max. Sulfur Content	Max. Ash Content	BTU Value
NA	NA	NA	NA

Emissions Data		
Criteria Pollutants	Potential Emissions	
	PPH	TPY
Carbon Monoxide (CO)	NA	NA
Nitrogen Oxides (NO_X)	NA	NA
Lead (Pb)	NA	NA
Particulate Matter ($PM_{2.5}$)	NA	NA
Particulate Matter (PM_{10})	NA	NA
Total Particulate Matter (TSP)	NA	NA
Sulfur Dioxide (SO_2)	NA	NA
Volatile Organic Compounds (VOC)	0.022	0.10
Hazardous Air Pollutants	Potential Emissions	
	PPH	TPY
Ethylene Glycol	0.022	0.10
Regulated Pollutants other than Criteria and HAP	Potential Emissions	
	PPH	TPY
NA	NA	NA

List the method(s) used to calculate the potential emissions (include dates of any stack tests conducted, versions of software used, source and dates of emission factors, etc.).

Engineering Estimate

Applicable Requirements
List all applicable requirements for this emission unit. For each applicable requirement, include the underlying rule/regulation citation and/or <u>construction permit</u> with the condition number. (*Note: Title V permit condition numbers alone are not the underlying applicable requirements*). If an emission limit is calculated based on the type of source and design capacity or if a standard is based on a design parameter, this information should also be included. **40CFR §63.1316(b)(2)(i); 40CFR §63.1316(b)(2)(i)(A); R13-1650K §4.1.15:** • Organic HAP emissions from all continuous process vents associated with polymerization reactor sections ≤ 0.02 kg organic HAP per Mg of product.
<u>X</u> Permit Shield
For all applicable requirements listed above, provide monitoring/testing/recordkeeping/reporting which shall be used to demonstrate compliance. If the method is based on a permit or rule, include the condition number or citation. (Note: Each requirement listed above must have an associated method of demonstrating compliance. If there is not already a required method in place, then a method must be proposed.) *Monitoring:* • Control device comply with applicable provisions of 40CFR §63.114.
Are you in compliance with all applicable requirements for this emission unit? <u>X</u> Yes ___No If no, complete the **Schedule of Compliance Form** as **ATTACHMENT F**.

ATTACHMENT E - Emission Unit Form

Emission Unit Description

Emission unit ID number:	**Emission unit name:**	**List any control devices associated with this emission unit:**
C4L-A-1071	CP-4 Recupic EG Tank	NA

Provide a description of the emission unit (type, method of operation, design parameters, etc.):
CP-4 Recupic EG Tank

Manufacturer:	**Model number:**	**Serial number:**
NA	NA	NA
Construction date:	**Installation date:**	**Modification date(s):**
NA	1996	NA

Design Capacity (examples: furnaces - tons/hr, tanks - gallons):
12,700 gallons

Maximum Hourly Throughput:	**Maximum Annual Throughput:**	**Maximum Operating Schedule:**
420 gph	3.7 mmgpy	8,760 hr/yr

Fuel Usage Data **(fill out all applicable fields)**

Does this emission unit combust fuel? ___ Yes X No	**If yes, is it?** ___ Indirect Fired ___Direct Fired
Maximum design heat input and/or maximum horsepower rating: NA	**Type and Btu/hr rating of burners:** NA

List the primary fuel type(s) and if applicable, the secondary fuel type(s). For each fuel type listed, provide the maximum hourly and annual fuel usage for each.
NA

Describe each fuel expected to be used during the term of the permit.

Fuel Type	Max. Sulfur Content	Max. Ash Content	BTU Value
NA	NA	NA	NA

Emissions Data		
Criteria Pollutants	Potential Emissions	
	PPH	TPY
Carbon Monoxide (CO)	NA	NA
Nitrogen Oxides (NO_X)	NA	NA
Lead (Pb)	NA	NA
Particulate Matter ($PM_{2.5}$)	NA	NA
Particulate Matter (PM_{10})	NA	NA
Total Particulate Matter (TSP)	NA	NA
Sulfur Dioxide (SO_2)	NA	NA
Volatile Organic Compounds (VOC)	0.022	0.10
Hazardous Air Pollutants	Potential Emissions	
	PPH	TPY
Ethylene Glycol	0.022	0.10
Regulated Pollutants other than Criteria and HAP	Potential Emissions	
	PPH	TPY
NA	NA	NA

List the method(s) used to calculate the potential emissions (include dates of any stack tests conducted, versions of software used, source and dates of emission factors, etc.).

Engineering Estimate

Applicable Requirements

List all applicable requirements for this emission unit. For each applicable requirement, include the underlying rule/regulation citation and/or construction permit with the condition number. (*Note: Title V permit condition numbers alone are not the underlying applicable requirements*). If an emission limit is calculated based on the type of source and design capacity or if a standard is based on a design parameter, this information should also be included.

40CFR §63.1316(b)(2)(i); 40CFR §63.1316(b)(2)(i)(A); R13-1650K §4.1.15:

- Organic HAP emissions from all continuous process vents associated with polymerization reactor sections ≤ 0.02 kg organic HAP per Mg of product.

X Permit Shield

For all applicable requirements listed above, provide monitoring/testing/recordkeeping/reporting which shall be used to demonstrate compliance. If the method is based on a permit or rule, include the condition number or citation. (Note: Each requirement listed above must have an associated method of demonstrating compliance. If there is not already a required method in place, then a method must be proposed.)

Monitoring:

- Control device comply with applicable provisions of 40CFR §63.114.

Are you in compliance with all applicable requirements for this emission unit? X Yes ___No

If no, complete the **Schedule of Compliance Form** as **ATTACHMENT F**.

ATTACHMENT E - Emission Unit Form

Emission Unit Description

Emission unit ID number:	**Emission unit name:**	**List any control devices associated with this emission unit:**
C4L-A-1072	CP-4 Recupic EG Tank	NA

Provide a description of the emission unit (type, method of operation, design parameters, etc.):
CP-4 Recupic EG Tank

Manufacturer:	**Model number:**	**Serial number:**
NA	NA	NA
Construction date:	**Installation date:**	**Modification date(s):**
NA	1996	NA

Design Capacity (examples: furnaces - tons/hr, tanks - gallons):
12,700 gallons

Maximum Hourly Throughput:	**Maximum Annual Throughput:**	**Maximum Operating Schedule:**
420 gph	3.7 mmgpy	8,760 hr/yr

Fuel Usage Data **(fill out all applicable fields)**

Does this emission unit combust fuel? ___ Yes X No	**If yes, is it?** ___ Indirect Fired ___Direct Fired
Maximum design heat input and/or maximum horsepower rating: NA	**Type and Btu/hr rating of burners:** NA

List the primary fuel type(s) and if applicable, the secondary fuel type(s). For each fuel type listed, provide the maximum hourly and annual fuel usage for each.
NA

Describe each fuel expected to be used during the term of the permit.

Fuel Type	Max. Sulfur Content	Max. Ash Content	BTU Value
NA	NA	NA	NA

Emissions Data		
Criteria Pollutants	Potential Emissions	
	PPH	TPY
Carbon Monoxide (CO)	NA	NA
Nitrogen Oxides (NO_X)	NA	NA
Lead (Pb)	NA	NA
Particulate Matter ($PM_{2.5}$)	NA	NA
Particulate Matter (PM_{10})	NA	NA
Total Particulate Matter (TSP)	NA	NA
Sulfur Dioxide (SO_2)	NA	NA
Volatile Organic Compounds (VOC)	0.022	0.10
Hazardous Air Pollutants	Potential Emissions	
	PPH	TPY
Ethylene Glycol	0.022	0.10
Regulated Pollutants other than Criteria and HAP	Potential Emissions	
	PPH	TPY
NA	NA	NA

List the method(s) used to calculate the potential emissions (include dates of any stack tests conducted, versions of software used, source and dates of emission factors, etc.).

Engineering Estimate

Applicable Requirements

List all applicable requirements for this emission unit. For each applicable requirement, include the underlying rule/regulation citation and/or construction permit with the condition number. (*Note: Title V permit condition numbers alone are not the underlying applicable requirements*). If an emission limit is calculated based on the type of source and design capacity or if a standard is based on a design parameter, this information should also be included.

40CFR §63.1316(b)(2)(i); 40CFR §63.1316(b)(2)(i)(A); R13-1650K §4.1.15:

- Organic HAP emissions from all continuous process vents associated with polymerization reactor sections ≤ 0.02 kg organic HAP per Mg of product.

X Permit Shield

For all applicable requirements listed above, provide monitoring/testing/recordkeeping/reporting which shall be used to demonstrate compliance. If the method is based on a permit or rule, include the condition number or citation. (Note: Each requirement listed above must have an associated method of demonstrating compliance. If there is not already a required method in place, then a method must be proposed.)

Monitoring:

- Control device comply with applicable provisions of 40CFR §63.114.

Are you in compliance with all applicable requirements for this emission unit? X Yes ___No

If no, complete the **Schedule of Compliance Form** as **ATTACHMENT F**.

ATTACHMENT E - Emission Unit Form

Emission Unit Description

Emission unit ID number:	**Emission unit name:**	**List any control devices associated with this emission unit:**
C4S-F-3080	CP-4 Recycle Surge Bin	C4S-M-3140

Provide a description of the emission unit (type, method of operation, design parameters, etc.):
CP-4 Recycle Surge Bin

Manufacturer:	**Model number:**	**Serial number:**
NA	NA	NA
Construction date:	**Installation date:**	**Modification date(s):**
NA	1999	NA

Design Capacity (examples: furnaces - tons/hr, tanks - gallons):
1,170 ft^3

Maximum Hourly Throughput:	**Maximum Annual Throughput:**	**Maximum Operating Schedule:**
20,085 lb/hr	2,115 tpy	8,760 hr/yr

Fuel Usage Data **(fill out all applicable fields)**

Does this emission unit combust fuel? ___ Yes X No	**If yes, is it?** ___ Indirect Fired ___Direct Fired
Maximum design heat input and/or maximum horsepower rating: NA	**Type and Btu/hr rating of burners:** NA

List the primary fuel type(s) and if applicable, the secondary fuel type(s). For each fuel type listed, provide the maximum hourly and annual fuel usage for each.
NA

Describe each fuel expected to be used during the term of the permit.

Fuel Type	Max. Sulfur Content	Max. Ash Content	BTU Value
NA	NA	NA	NA

Emissions Data		
Criteria Pollutants	Potential Emissions	
	PPH	TPY
Carbon Monoxide (CO)	NA	NA
Nitrogen Oxides (NO_X)	NA	NA
Lead (Pb)	NA	NA
Particulate Matter ($PM_{2.5}$)	NA	NA
Particulate Matter (PM_{10})	0.06	0.01
Total Particulate Matter (TSP)	0.06	0.01
Sulfur Dioxide (SO_2)	NA	NA
Volatile Organic Compounds (VOC)	NA	NA
Hazardous Air Pollutants	Potential Emissions	
	PPH	TPY
NA	NA	NA
Regulated Pollutants other than Criteria and HAP	Potential Emissions	
	PPH	TPY
NA	NA	NA

List the method(s) used to calculate the potential emissions (include dates of any stack tests conducted, versions of software used, source and dates of emission factors, etc.).

Engineering Estimate

Applicable Requirements
List all applicable requirements for this emission unit. For each applicable requirement, include the underlying rule/regulation citation and/or construction permit with the condition number. (*Note: Title V permit condition numbers alone are not the underlying applicable requirements*). If an emission limit is calculated based on the type of source and design capacity or if a standard is based on a design parameter, this information should also be included. NA
X Permit Shield
For all applicable requirements listed above, provide monitoring/testing/recordkeeping/reporting which shall be used to demonstrate compliance. If the method is based on a permit or rule, include the condition number or citation. (Note: Each requirement listed above must have an associated method of demonstrating compliance. If there is not already a required method in place, then a method must be proposed.) NA
Are you in compliance with all applicable requirements for this emission unit? X Yes ___No If no, complete the **Schedule of Compliance Form** as **ATTACHMENT F**.

ATTACHMENT E - Emission Unit Form

Emission Unit Description

Emission unit ID number:	**Emission unit name:**	**List any control devices associated with this emission unit:**
C4R-F-1900	CP-4 Refrigerant Surge Tank	NA

Provide a description of the emission unit (type, method of operation, design parameters, etc.):
CP-4 Refrigerant Surge Tank

Manufacturer:	**Model number:**	**Serial number:**
NA	NA	NA
Construction date:	**Installation date:**	**Modification date(s):**
NA	1996	NA

Design Capacity (examples: furnaces - tons/hr, tanks - gallons):
955 gallons

Maximum Hourly Throughput:	**Maximum Annual Throughput:**	**Maximum Operating Schedule:**
1,020 gph	8.94 mmgpy	8,760 hr/yr

Fuel Usage Data **(fill out all applicable fields)**

Does this emission unit combust fuel? ___ Yes X No	**If yes, is it?** ___ Indirect Fired ___Direct Fired
Maximum design heat input and/or maximum horsepower rating: NA	**Type and Btu/hr rating of burners:** NA

List the primary fuel type(s) and if applicable, the secondary fuel type(s). For each fuel type listed, provide the maximum hourly and annual fuel usage for each.
NA

Describe each fuel expected to be used during the term of the permit.

Fuel Type	Max. Sulfur Content	Max. Ash Content	BTU Value
NA	NA	NA	NA

Emissions Data		
Criteria Pollutants	Potential Emissions	
	PPH	TPY
Carbon Monoxide (CO)	NA	NA
Nitrogen Oxides (NO_X)	NA	NA
Lead (Pb)	NA	NA
Particulate Matter ($PM_{2.5}$)	NA	NA
Particulate Matter (PM_{10})	NA	NA
Total Particulate Matter (TSP)	NA	NA
Sulfur Dioxide (SO_2)	NA	NA
Volatile Organic Compounds (VOC)	0.002	0.001
Hazardous Air Pollutants	Potential Emissions	
	PPH	TPY
NA	NA	NA
Regulated Pollutants other than Criteria and HAP	Potential Emissions	
	PPH	TPY
NA	NA	NA

List the method(s) used to calculate the potential emissions (include dates of any stack tests conducted, versions of software used, source and dates of emission factors, etc.).

Engineering Estimate

Applicable Requirements
List all applicable requirements for this emission unit. For each applicable requirement, include the underlying rule/regulation citation and/or construction permit with the condition number. (*Note: Title V permit condition numbers alone are not the underlying applicable requirements*). If an emission limit is calculated based on the type of source and design capacity or if a standard is based on a design parameter, this information should also be included. NA
X Permit Shield
For all applicable requirements listed above, provide monitoring/testing/recordkeeping/reporting which shall be used to demonstrate compliance. If the method is based on a permit or rule, include the condition number or citation. (Note: Each requirement listed above must have an associated method of demonstrating compliance. If there is not already a required method in place, then a method must be proposed.) NA
Are you in compliance with all applicable requirements for this emission unit? X Yes ___No If no, complete the **Schedule of Compliance Form** as **ATTACHMENT F**.

ATTACHMENT E - Emission Unit Form

Emission Unit Description

Emission unit ID number:	**Emission unit name:**	**List any control devices associated with this emission unit:**
C4L-F-3160	CP-4 Stabilizer Charge Tank	C4T-B-1600

Provide a description of the emission unit (type, method of operation, design parameters, etc.):
CP-4 Stabilizer Charge Tank

Manufacturer:	**Model number:**	**Serial number:**
NA	NA	NA
Construction date:	**Installation date:**	**Modification date(s):**
NA	1996	NA

Design Capacity (examples: furnaces - tons/hr, tanks - gallons):
275 gallons

Maximum Hourly Throughput:	**Maximum Annual Throughput:**	**Maximum Operating Schedule:**
900 gph	0.11 mmgpy	8,760 hr/yr

Fuel Usage Data **(fill out all applicable fields)**

Does this emission unit combust fuel? ___ Yes X No	**If yes, is it?** ___ Indirect Fired ___Direct Fired
Maximum design heat input and/or maximum horsepower rating: NA	**Type and Btu/hr rating of burners:** NA

List the primary fuel type(s) and if applicable, the secondary fuel type(s). For each fuel type listed, provide the maximum hourly and annual fuel usage for each.
NA

Describe each fuel expected to be used during the term of the permit.

Fuel Type	Max. Sulfur Content	Max. Ash Content	BTU Value
NA	NA	NA	NA

Emissions Data		
Criteria Pollutants	Potential Emissions	
	PPH	TPY
Carbon Monoxide (CO)	See emissions from Hot Oil Heater C4T-B-1600.	
Nitrogen Oxides (NO_X)		
Lead (Pb)		
Particulate Matter ($PM_{2.5}$)		
Particulate Matter (PM_{10})		
Total Particulate Matter (TSP)		
Sulfur Dioxide (SO_2)		
Volatile Organic Compounds (VOC)		
Hazardous Air Pollutants	Potential Emissions	
	PPH	TPY
See emissions from Hot Oil Heater C4T-B-1600.		
Regulated Pollutants other than Criteria and HAP	Potential Emissions	
	PPH	TPY
NA	NA	NA

List the method(s) used to calculate the potential emissions (include dates of any stack tests conducted, versions of software used, source and dates of emission factors, etc.).

Engineering Estimate

Applicable Requirements

List all applicable requirements for this emission unit. For each applicable requirement, include the underlying rule/regulation citation and/or construction permit with the condition number. (*Note: Title V permit condition numbers alone are not the underlying applicable requirements*). If an emission limit is calculated based on the type of source and design capacity or if a standard is based on a design parameter, this information should also be included.

40CFR §63.1316(b)(2)(i); 40CFR §63.1316(b)(2)(i)(A); R13-1650K §4.1.15:

- Organic HAP emissions from all continuous process vents associated with esterification vessels ≤ 0.04 kg organic HAP per Mg of product.

X Permit Shield

For all applicable requirements listed above, provide monitoring/testing/recordkeeping/reporting which shall be used to demonstrate compliance. If the method is based on a permit or rule, include the condition number or citation. (Note: Each requirement listed above must have an associated method of demonstrating compliance. If there is not already a required method in place, then a method must be proposed.)

Monitoring:

- Control device comply with applicable provisions of 40CFR §63.114.

Are you in compliance with all applicable requirements for this emission unit? X Yes ___No

If no, complete the **Schedule of Compliance Form** as **ATTACHMENT F**.

CSS-7

ATTACHMENT E - Emission Unit Form

Emission Unit Description

Emission unit ID number:	**Emission unit name:**	**List any control devices associated with this emission unit:**
L36-F-6040	CSS-7 Box and Bagging Blender	L36-M-0607

Provide a description of the emission unit (type, method of operation, design parameters, etc.):
CSS-7 Box and Bagging Blender

Manufacturer:	**Model number:**	**Serial number:**
NA	NA	NA
Construction date:	**Installation date:**	**Modification date(s):**
NA	1988	NA

Design Capacity (examples: furnaces - tons/hr, tanks - gallons):
1,500 ft^3

Maximum Hourly Throughput:	**Maximum Annual Throughput:**	**Maximum Operating Schedule:**
13,000 lb/hr	56,940 tpy	8,760 hr/yr

Fuel Usage Data **(fill out all applicable fields)**

Does this emission unit combust fuel? ___ Yes X No	**If yes, is it?** ___ Indirect Fired ___Direct Fired
Maximum design heat input and/or maximum horsepower rating: NA	**Type and Btu/hr rating of burners:** NA

List the primary fuel type(s) and if applicable, the secondary fuel type(s). For each fuel type listed, provide the maximum hourly and annual fuel usage for each.
NA

Describe each fuel expected to be used during the term of the permit.

Fuel Type	Max. Sulfur Content	Max. Ash Content	BTU Value
NA	NA	NA	NA

Emissions Data		
Criteria Pollutants	Potential Emissions	
	PPH	TPY
Carbon Monoxide (CO)	NA	NA
Nitrogen Oxides (NO_X)	NA	NA
Lead (Pb)	NA	NA
Particulate Matter ($PM_{2.5}$)	NA	NA
Particulate Matter (PM_{10})	0.002	<0.001
Total Particulate Matter (TSP)	0.002	<0.001
Sulfur Dioxide (SO_2)	NA	NA
Volatile Organic Compounds (VOC)	NA	NA
Hazardous Air Pollutants	Potential Emissions	
	PPH	TPY
NA	NA	NA
Regulated Pollutants other than Criteria and HAP	Potential Emissions	
	PPH	TPY
NA	NA	NA

List the method(s) used to calculate the potential emissions (include dates of any stack tests conducted, versions of software used, source and dates of emission factors, etc.).

Engineering Estimate

Applicable Requirements
List all applicable requirements for this emission unit. For each applicable requirement, include the underlying rule/regulation citation and/or construction permit with the condition number. (*Note: Title V permit condition numbers alone are not the underlying applicable requirements*). If an emission limit is calculated based on the type of source and design capacity or if a standard is based on a design parameter, this information should also be included. NA
X Permit Shield
For all applicable requirements listed above, provide monitoring/testing/recordkeeping/reporting which shall be used to demonstrate compliance. If the method is based on a permit or rule, include the condition number or citation. (Note: Each requirement listed above must have an associated method of demonstrating compliance. If there is not already a required method in place, then a method must be proposed.) NA
Are you in compliance with all applicable requirements for this emission unit? X Yes ___No If no, complete the **Schedule of Compliance Form** as **ATTACHMENT F**.

ATTACHMENT E - Emission Unit Form

Emission Unit Description

Emission unit ID number:	**Emission unit name:**	**List any control devices associated with this emission unit:**
L14-F-2660	CSS-7 & CSS-8 T-66 Dump Tank	NA

Provide a description of the emission unit (type, method of operation, design parameters, etc.):
CSS-7 & CSS-8 T-66 Dump Tank

Manufacturer:	**Model number:**	**Serial number:**
NA	NA	NA
Construction date:	**Installation date:**	**Modification date(s):**
NA	1988	NA

Design Capacity (examples: furnaces - tons/hr, tanks - gallons):
116 gallons

Maximum Hourly Throughput:	**Maximum Annual Throughput:**	**Maximum Operating Schedule:**
NA	NA	8,760 hr/yr

Fuel Usage Data **(fill out all applicable fields)**

Does this emission unit combust fuel? ___ Yes X No	**If yes, is it?** ___ Indirect Fired ___Direct Fired
Maximum design heat input and/or maximum horsepower rating: NA	**Type and Btu/hr rating of burners:** NA

List the primary fuel type(s) and if applicable, the secondary fuel type(s). For each fuel type listed, provide the maximum hourly and annual fuel usage for each.
NA

Describe each fuel expected to be used during the term of the permit.

Fuel Type	Max. Sulfur Content	Max. Ash Content	BTU Value
NA	NA	NA	NA

Emissions Data		
Criteria Pollutants	Potential Emissions	
	PPH	TPY
Carbon Monoxide (CO)	NA	NA
Nitrogen Oxides (NO_X)	NA	NA
Lead (Pb)	NA	NA
Particulate Matter ($PM_{2.5}$)	NA	NA
Particulate Matter (PM_{10})	NA	NA
Total Particulate Matter (TSP)	NA	NA
Sulfur Dioxide (SO_2)	NA	NA
Volatile Organic Compounds (VOC)	0.001	0.001
Hazardous Air Pollutants	Potential Emissions	
	PPH	TPY
NA	NA	NA
Regulated Pollutants other than Criteria and HAP	Potential Emissions	
	PPH	TPY
NA	NA	NA

List the method(s) used to calculate the potential emissions (include dates of any stack tests conducted, versions of software used, source and dates of emission factors, etc.).

Engineering Estimate

Applicable Requirements
List all applicable requirements for this emission unit. For each applicable requirement, include the underlying rule/regulation citation and/or construction permit with the condition number. (*Note: Title V permit condition numbers alone are not the underlying applicable requirements*). If an emission limit is calculated based on the type of source and design capacity or if a standard is based on a design parameter, this information should also be included. NA
X Permit Shield
For all applicable requirements listed above, provide monitoring/testing/recordkeeping/reporting which shall be used to demonstrate compliance. If the method is based on a permit or rule, include the condition number or citation. (Note: Each requirement listed above must have an associated method of demonstrating compliance. If there is not already a required method in place, then a method must be proposed.) NA
Are you in compliance with all applicable requirements for this emission unit? X Yes ___No If no, complete the **Schedule of Compliance Form** as **ATTACHMENT F**.

ATTACHMENT E - Emission Unit Form

Emission Unit Description

Emission unit ID number:	**Emission unit name:**	**List any control devices associated with this emission unit:**
C2A-E-5240/C2A-B-5010	CSS-7 Crystallizer & Heater	C2A-M-5350

Provide a description of the emission unit (type, method of operation, design parameters, etc.):
CSS-7 Crystallizer & Heater

Manufacturer:	**Model number:**	**Serial number:**
NA	NA	NA
Construction date:	**Installation date:**	**Modification date(s):**
NA	1988	NA

Design Capacity (examples: furnaces - tons/hr, tanks - gallons):
13,000 pph/1.8 mmBtu/hr

Maximum Hourly Throughput:	**Maximum Annual Throughput:**	**Maximum Operating Schedule:**
13,000 lb/hr	56,940 tpy	8,760 hr/yr

Fuel Usage Data **(fill out all applicable fields)**

Does this emission unit combust fuel? X Yes ___ No	**If yes, is it?** X Indirect Fired ___Direct Fired
Maximum design heat input and/or maximum horsepower rating: 1.8 mmBtu/hr	**Type and Btu/hr rating of burners:** 1.8 mmBtu/hr

List the primary fuel type(s) and if applicable, the secondary fuel type(s). For each fuel type listed, provide the maximum hourly and annual fuel usage for each.
Natural Gas – 1,875 scf/hr; 16.4 mmscf/yr

Describe each fuel expected to be used during the term of the permit.

Fuel Type	Max. Sulfur Content	Max. Ash Content	BTU Value
Natural	0.01 wt%	NA	960 Btu/scf

Emissions Data		
Criteria Pollutants	Potential Emissions	
	PPH	TPY
Carbon Monoxide (CO)	0.04	0.18
Nitrogen Oxides (NO_X)	0.18	0.79
Lead (Pb)	NA	NA
Particulate Matter ($PM_{2.5}$)	NA	NA
Particulate Matter (PM_{10})	0.008	0.04
Total Particulate Matter (TSP)	0.008	0.04
Sulfur Dioxide (SO_2)	0.001	0.004
Volatile Organic Compounds (VOC)	0.42	1.84
Hazardous Air Pollutants	Potential Emissions	
	PPH	TPY
Ethylene Glycol	0.26	1.10
Acetaldehyde	0.13	0.54
Regulated Pollutants other than Criteria and HAP	Potential Emissions	
	PPH	TPY
NA	NA	NA

List the method(s) used to calculate the potential emissions (include dates of any stack tests conducted, versions of software used, source and dates of emission factors, etc.).

Engineering Estimate

Applicable Requirements
List all applicable requirements for this emission unit. For each applicable requirement, include the underlying rule/regulation citation and/or construction permit with the condition number. (*Note: Title V permit condition numbers alone are not the underlying applicable requirements*). If an emission limit is calculated based on the type of source and design capacity or if a standard is based on a design parameter, this information should also be included. NA
X Permit Shield
For all applicable requirements listed above, provide monitoring/testing/recordkeeping/reporting which shall be used to demonstrate compliance. If the method is based on a permit or rule, include the condition number or citation. (Note: Each requirement listed above must have an associated method of demonstrating compliance. If there is not already a required method in place, then a method must be proposed.) NA
Are you in compliance with all applicable requirements for this emission unit? X Yes ___No If no, complete the **Schedule of Compliance Form** as **ATTACHMENT F**.

ATTACHMENT E - Emission Unit Form

Emission Unit Description

Emission unit ID number:	**Emission unit name:**	**List any control devices associated with this emission unit:**
C2A-F-5410	CSS-7 Crystallizer Surge Bin	C2A-M-2601

Provide a description of the emission unit (type, method of operation, design parameters, etc.):
CSS-7 Crystallizer Surge Bin

Manufacturer:	**Model number:**	**Serial number:**
NA	NA	NA
Construction date:	**Installation date:**	**Modification date(s):**
NA	1988	NA

Design Capacity (examples: furnaces - tons/hr, tanks - gallons):
3,500 ft^3

Maximum Hourly Throughput:	**Maximum Annual Throughput:**	**Maximum Operating Schedule:**
13,000 lb/hr	56,940 tpy	8,760 hr/yr

Fuel Usage Data **(fill out all applicable fields)**

Does this emission unit combust fuel? ___Yes _X_ No	**If yes, is it?** ___ Indirect Fired ___Direct Fired
Maximum design heat input and/or maximum horsepower rating: NA	**Type and Btu/hr rating of burners:** NA

List the primary fuel type(s) and if applicable, the secondary fuel type(s). For each fuel type listed, provide the maximum hourly and annual fuel usage for each.
NA

Describe each fuel expected to be used during the term of the permit.

Fuel Type	Max. Sulfur Content	Max. Ash Content	BTU Value
NA	NA	NA	NA

Emissions Data		
Criteria Pollutants	Potential Emissions	
	PPH	TPY
Carbon Monoxide (CO)	NA	NA
Nitrogen Oxides (NO_X)	NA	NA
Lead (Pb)	NA	NA
Particulate Matter ($PM_{2.5}$)	NA	NA
Particulate Matter (PM_{10})	0.002	<0.001
Total Particulate Matter (TSP)	0.002	<0.001
Sulfur Dioxide (SO_2)	NA	NA
Volatile Organic Compounds (VOC)	NA	NA
Hazardous Air Pollutants	Potential Emissions	
	PPH	TPY
NA	NA	NA
Regulated Pollutants other than Criteria and HAP	Potential Emissions	
	PPH	TPY
NA	NA	NA

List the method(s) used to calculate the potential emissions (include dates of any stack tests conducted, versions of software used, source and dates of emission factors, etc.).

Engineering Estimate

Applicable Requirements
List all applicable requirements for this emission unit. For each applicable requirement, include the underlying rule/regulation citation and/or construction permit with the condition number. (*Note: Title V permit condition numbers alone are not the underlying applicable requirements*). If an emission limit is calculated based on the type of source and design capacity or if a standard is based on a design parameter, this information should also be included. NA
X Permit Shield
For all applicable requirements listed above, provide monitoring/testing/recordkeeping/reporting which shall be used to demonstrate compliance. If the method is based on a permit or rule, include the condition number or citation. (Note: Each requirement listed above must have an associated method of demonstrating compliance. If there is not already a required method in place, then a method must be proposed.) NA
Are you in compliance with all applicable requirements for this emission unit? X Yes ___No If no, complete the **Schedule of Compliance Form** as **ATTACHMENT F**.

ATTACHMENT E - Emission Unit Form

Emission Unit Description

Emission unit ID number:	**Emission unit name:**	**List any control devices associated with this emission unit:**
L14-U-4030	CSS-7 Fines Elutriator	NA

Provide a description of the emission unit (type, method of operation, design parameters, etc.):
CSS-7 Fines Elutriator

Manufacturer:	**Model number:**	**Serial number:**
NA	NA	NA
Construction date:	**Installation date:**	**Modification date(s):**
NA	1990	NA

Design Capacity (examples: furnaces - tons/hr, tanks - gallons):
150 ft^2

Maximum Hourly Throughput:	**Maximum Annual Throughput:**	**Maximum Operating Schedule:**
13,000 lb/hr	56,940 tpy	8,760 hr/yr

Fuel Usage Data **(fill out all applicable fields)**

Does this emission unit combust fuel? ___ Yes X No	**If yes, is it?** ___ Indirect Fired ___Direct Fired
Maximum design heat input and/or maximum horsepower rating: NA	**Type and Btu/hr rating of burners:** NA

List the primary fuel type(s) and if applicable, the secondary fuel type(s). For each fuel type listed, provide the maximum hourly and annual fuel usage for each.
NA

Describe each fuel expected to be used during the term of the permit.

Fuel Type	Max. Sulfur Content	Max. Ash Content	BTU Value
NA	NA	NA	NA

Emissions Data		
Criteria Pollutants	Potential Emissions	
	PPH	TPY
Carbon Monoxide (CO)	NA	NA
Nitrogen Oxides (NO_X)	NA	NA
Lead (Pb)	NA	NA
Particulate Matter ($PM_{2.5}$)	NA	NA
Particulate Matter (PM_{10})	<0.001	<0.001
Total Particulate Matter (TSP)	<0.001	<0.001
Sulfur Dioxide (SO_2)	NA	NA
Volatile Organic Compounds (VOC)	NA	NA
Hazardous Air Pollutants	Potential Emissions	
	PPH	TPY
NA	NA	NA
Regulated Pollutants other than Criteria and HAP	Potential Emissions	
	PPH	TPY
NA	NA	NA

List the method(s) used to calculate the potential emissions (include dates of any stack tests conducted, versions of software used, source and dates of emission factors, etc.).

Engineering Estimate

Applicable Requirements
List all applicable requirements for this emission unit. For each applicable requirement, include the underlying rule/regulation citation and/or construction permit with the condition number. (*Note: Title V permit condition numbers alone are not the underlying applicable requirements*). If an emission limit is calculated based on the type of source and design capacity or if a standard is based on a design parameter, this information should also be included. NA
X Permit Shield
For all applicable requirements listed above, provide monitoring/testing/recordkeeping/reporting which shall be used to demonstrate compliance. If the method is based on a permit or rule, include the condition number or citation. (Note: Each requirement listed above must have an associated method of demonstrating compliance. If there is not already a required method in place, then a method must be proposed.) NA
Are you in compliance with all applicable requirements for this emission unit? X Yes ___No If no, complete the **Schedule of Compliance Form** as **ATTACHMENT F**.

ATTACHMENT E - Emission Unit Form

Emission Unit Description

Emission unit ID number:	**Emission unit name:**	**List any control devices associated with this emission unit:**
L21-F-1020	CSS-7 Off-Spec Silo A	L21-M-1050

Provide a description of the emission unit (type, method of operation, design parameters, etc.):
CSS-7 Off-Spec Silo A

Manufacturer:	**Model number:**	**Serial number:**
NA	NA	NA
Construction date:	**Installation date:**	**Modification date(s):**
NA	1988	NA

Design Capacity (examples: furnaces - tons/hr, tanks - gallons):
4,000 ft^3

Maximum Hourly Throughput:	**Maximum Annual Throughput:**	**Maximum Operating Schedule:**
13,000 lb/hr	56,940 tpy	8,760 hr/yr

Fuel Usage Data **(fill out all applicable fields)**

Does this emission unit combust fuel? ___ Yes X No	**If yes, is it?** ___ Indirect Fired ___Direct Fired
Maximum design heat input and/or maximum horsepower rating: NA	**Type and Btu/hr rating of burners:** NA

List the primary fuel type(s) and if applicable, the secondary fuel type(s). For each fuel type listed, provide the maximum hourly and annual fuel usage for each.
NA

Describe each fuel expected to be used during the term of the permit.

Fuel Type	Max. Sulfur Content	Max. Ash Content	BTU Value
NA	NA	NA	NA

Emissions Data		
Criteria Pollutants	Potential Emissions	
	PPH	TPY
Carbon Monoxide (CO)	NA	NA
Nitrogen Oxides (NO_X)	NA	NA
Lead (Pb)	NA	NA
Particulate Matter ($PM_{2.5}$)	NA	NA
Particulate Matter (PM_{10})	<0.001	0.004
Total Particulate Matter (TSP)	<0.001	0.004
Sulfur Dioxide (SO_2)	NA	NA
Volatile Organic Compounds (VOC)	NA	NA
Hazardous Air Pollutants	Potential Emissions	
	PPH	TPY
NA	NA	NA
Regulated Pollutants other than Criteria and HAP	Potential Emissions	
	PPH	TPY
NA	NA	NA

List the method(s) used to calculate the potential emissions (include dates of any stack tests conducted, versions of software used, source and dates of emission factors, etc.).

Engineering Estimate

Applicable Requirements
List all applicable requirements for this emission unit. For each applicable requirement, include the underlying rule/regulation citation and/or <u>construction permit</u> with the condition number. (*Note: Title V permit condition numbers alone are not the underlying applicable requirements*). If an emission limit is calculated based on the type of source and design capacity or if a standard is based on a design parameter, this information should also be included. **R13-1650K §4.1.13; 45CSR §7-3.7:** • Storage structure required to have full enclosure and equipped with PM control devices.
<u>X</u> Permit Shield
For all applicable requirements listed above, provide monitoring/testing/recordkeeping/reporting which shall be used to demonstrate compliance. If the method is based on a permit or rule, include the condition number or citation. (Note: Each requirement listed above must have an associated method of demonstrating compliance. If there is not already a required method in place, then a method must be proposed.) NA
Are you in compliance with all applicable requirements for this emission unit? <u>X</u> Yes ___No If no, complete the **Schedule of Compliance Form** as **ATTACHMENT F**.

ATTACHMENT E - Emission Unit Form

Emission Unit Description

Emission unit ID number:	**Emission unit name:**	**List any control devices associated with this emission unit:**
L21-F-2040	CSS-7 Off-Spec Silo B	L21-M-2120

Provide a description of the emission unit (type, method of operation, design parameters, etc.):
CSS-7 Off-Spec Silo B

Manufacturer:	**Model number:**	**Serial number:**
NA	NA	NA
Construction date:	**Installation date:**	**Modification date(s):**
NA	1987	NA

Design Capacity (examples: furnaces - tons/hr, tanks - gallons):
4,000 ft^3

Maximum Hourly Throughput:	**Maximum Annual Throughput:**	**Maximum Operating Schedule:**
13,000 lb/hr	56,940 tpy	8,760 hr/yr

Fuel Usage Data **(fill out all applicable fields)**

Does this emission unit combust fuel? ___ Yes X No	**If yes, is it?** ___ Indirect Fired ___Direct Fired
Maximum design heat input and/or maximum horsepower rating: NA	**Type and Btu/hr rating of burners:** NA

List the primary fuel type(s) and if applicable, the secondary fuel type(s). For each fuel type listed, provide the maximum hourly and annual fuel usage for each.
NA

Describe each fuel expected to be used during the term of the permit.

Fuel Type	Max. Sulfur Content	Max. Ash Content	BTU Value
NA	NA	NA	NA

Emissions Data		
Criteria Pollutants	Potential Emissions	
	PPH	TPY
Carbon Monoxide (CO)	NA	NA
Nitrogen Oxides (NO_X)	NA	NA
Lead (Pb)	NA	NA
Particulate Matter ($PM_{2.5}$)	NA	NA
Particulate Matter (PM_{10})	<0.001	0.004
Total Particulate Matter (TSP)	<0.001	0.004
Sulfur Dioxide (SO_2)	NA	NA
Volatile Organic Compounds (VOC)	NA	NA
Hazardous Air Pollutants	Potential Emissions	
	PPH	TPY
NA	NA	NA
Regulated Pollutants other than Criteria and HAP	Potential Emissions	
	PPH	TPY
NA	NA	NA

List the method(s) used to calculate the potential emissions (include dates of any stack tests conducted, versions of software used, source and dates of emission factors, etc.).

Engineering Estimate

Applicable Requirements
List all applicable requirements for this emission unit. For each applicable requirement, include the underlying rule/regulation citation and/or <u>construction permit</u> with the condition number. (*Note: Title V permit condition numbers alone are not the underlying applicable requirements*). If an emission limit is calculated based on the type of source and design capacity or if a standard is based on a design parameter, this information should also be included. **R13-1650K §4.1.13; 45CSR §7-3.7:** • Storage structure required to have full enclosure and equipped with PM control devices.
<u>X</u> Permit Shield
For all applicable requirements listed above, provide monitoring/testing/recordkeeping/reporting which shall be used to demonstrate compliance. If the method is based on a permit or rule, include the condition number or citation. (Note: Each requirement listed above must have an associated method of demonstrating compliance. If there is not already a required method in place, then a method must be proposed.) NA
Are you in compliance with all applicable requirements for this emission unit? <u>X</u> Yes ___No If no, complete the **Schedule of Compliance Form** as **ATTACHMENT F**.

ATTACHMENT E - Emission Unit Form

Emission Unit Description

Emission unit ID number:	**Emission unit name:**	**List any control devices associated with this emission unit:**
C2B-E-5250/C2B-B-7020	CSS-7 Preheater & Heater	C2A-M-5350

Provide a description of the emission unit (type, method of operation, design parameters, etc.):
CSS-7 Preheater & Heater

Manufacturer:	**Model number:**	**Serial number:**
NA	NA	NA
Construction date:	**Installation date:**	**Modification date(s):**
NA	1988	NA

Design Capacity (examples: furnaces - tons/hr, tanks - gallons):
13,000 lb/hr/1.07 mmBtu/hr

Maximum Hourly Throughput:	**Maximum Annual Throughput:**	**Maximum Operating Schedule:**
13,000 lb/hr	56,940 tpy	8,760 hr/yr

Fuel Usage Data **(fill out all applicable fields)**

Does this emission unit combust fuel? X Yes ___ No	**If yes, is it?** X Indirect Fired ___Direct Fired
Maximum design heat input and/or maximum horsepower rating: 1.07 mmBtu/hr	**Type and Btu/hr rating of burners:** 1.07 mmBtu/hr

List the primary fuel type(s) and if applicable, the secondary fuel type(s). For each fuel type listed, provide the maximum hourly and annual fuel usage for each.
Natural Gas – 1,115 scf/hr; 9.8 mmscf/yr

Describe each fuel expected to be used during the term of the permit.

Fuel Type	Max. Sulfur Content	Max. Ash Content	BTU Value
Natural	0.01 wt%	NA	960 Btu/scf

Emissions Data		
Criteria Pollutants	Potential Emissions	
	PPH	TPY
Carbon Monoxide (CO)	Emissions included with Crystallizer & Heater C2A-E-5240/C2A-B-5010.	
Nitrogen Oxides (NO_X)		
Lead (Pb)		
Particulate Matter ($PM_{2.5}$)		
Particulate Matter (PM_{10})		
Total Particulate Matter (TSP)		
Sulfur Dioxide (SO_2)		
Volatile Organic Compounds (VOC)		
Hazardous Air Pollutants	Potential Emissions	
	PPH	TPY
Ethylene Glycol	Emissions included with Crystallizer & Heater C2A-E-5240/C2A-B-5010.	
Acetaldehyde		
Regulated Pollutants other than Criteria and HAP	Potential Emissions	
	PPH	TPY
NA	NA	NA

List the method(s) used to calculate the potential emissions (include dates of any stack tests conducted, versions of software used, source and dates of emission factors, etc.).

Engineering Estimate

Applicable Requirements
List all applicable requirements for this emission unit. For each applicable requirement, include the underlying rule/regulation citation and/or construction permit with the condition number. (*Note: Title V permit condition numbers alone are not the underlying applicable requirements*). If an emission limit is calculated based on the type of source and design capacity or if a standard is based on a design parameter, this information should also be included. NA
X Permit Shield
For all applicable requirements listed above, provide monitoring/testing/recordkeeping/reporting which shall be used to demonstrate compliance. If the method is based on a permit or rule, include the condition number or citation. (Note: Each requirement listed above must have an associated method of demonstrating compliance. If there is not already a required method in place, then a method must be proposed.) NA
Are you in compliance with all applicable requirements for this emission unit? X Yes ___No If no, complete the **Schedule of Compliance Form** as **ATTACHMENT F**.

ATTACHMENT E - Emission Unit Form

Emission Unit Description

Emission unit ID number:	**Emission unit name:**	**List any control devices associated with this emission unit:**
C2B-F-5420	CSS-7 Preheater Surge Bin	M-2603 and C2T-B-9001

Provide a description of the emission unit (type, method of operation, design parameters, etc.):
CSS-7 Preheater Surge Bin

Manufacturer:	**Model number:**	**Serial number:**
NA	NA	NA
Construction date:	**Installation date:**	**Modification date(s):**
NA	1988	NA

Design Capacity (examples: furnaces - tons/hr, tanks - gallons):
943 ft^3

Maximum Hourly Throughput:	**Maximum Annual Throughput:**	**Maximum Operating Schedule:**
13,000 lb/hr	56,940 tpy	8,760 hr/yr

Fuel Usage Data **(fill out all applicable fields)**

Does this emission unit combust fuel? ___ Yes X No	**If yes, is it?** ___ Indirect Fired ___Direct Fired
Maximum design heat input and/or maximum horsepower rating: NA	**Type and Btu/hr rating of burners:** NA

List the primary fuel type(s) and if applicable, the secondary fuel type(s). For each fuel type listed, provide the maximum hourly and annual fuel usage for each.
NA

Describe each fuel expected to be used during the term of the permit.

Fuel Type	Max. Sulfur Content	Max. Ash Content	BTU Value
NA	NA	NA	NA

Emissions Data		
Criteria Pollutants	Potential Emissions	
	PPH	TPY
Carbon Monoxide (CO)	See Emissions from Hot Oil Heater C2T-B-9001.	
Nitrogen Oxides (NO_X)		
Lead (Pb)		
Particulate Matter ($PM_{2.5}$)		
Particulate Matter (PM_{10})		
Total Particulate Matter (TSP)		
Sulfur Dioxide (SO_2)		
Volatile Organic Compounds (VOC)		
Hazardous Air Pollutants	Potential Emissions	
	PPH	TPY
See Emission from Hot Oil Heater C2T-B-9001.		
Regulated Pollutants other than Criteria and HAP	Potential Emissions	
	PPH	TPY
NA	NA	NA

List the method(s) used to calculate the potential emissions (include dates of any stack tests conducted, versions of software used, source and dates of emission factors, etc.).

Engineering Estimate

Applicable Requirements
List all applicable requirements for this emission unit. For each applicable requirement, include the underlying rule/regulation citation and/or <u>construction permit</u> with the condition number. (*Note: Title V permit condition numbers alone are not the underlying applicable requirements*). If an emission limit is calculated based on the type of source and design capacity or if a standard is based on a design parameter, this information should also be included. NA
<u>X</u> Permit Shield
For all applicable requirements listed above, provide monitoring/testing/recordkeeping/reporting which shall be used to demonstrate compliance. If the method is based on a permit or rule, include the condition number or citation. (Note: Each requirement listed above must have an associated method of demonstrating compliance. If there is not already a required method in place, then a method must be proposed.) NA
Are you in compliance with all applicable requirements for this emission unit? <u>X</u> Yes ___No If no, complete the **Schedule of Compliance Form** as **ATTACHMENT F**.

ATTACHMENT E - Emission Unit Form

Emission Unit Description

Emission unit ID number:	**Emission unit name:**	**List any control devices associated with this emission unit:**
C2D-E-5280	CSS-7 Product Cooler	C2D-M-0520

Provide a description of the emission unit (type, method of operation, design parameters, etc.):
CSS-7 Product Cooler

Manufacturer:	**Model number:**	**Serial number:**
NA	NA	NA
Construction date:	**Installation date:**	**Modification date(s):**
NA	1988	NA

Design Capacity (examples: furnaces - tons/hr, tanks - gallons):
14,156 acfm

Maximum Hourly Throughput:	**Maximum Annual Throughput:**	**Maximum Operating Schedule:**
13,000 lb/hr	56,940 tpy	8,760 hr/yr

Fuel Usage Data **(fill out all applicable fields)**

Does this emission unit combust fuel? ___ Yes X No	**If yes, is it?** ___ Indirect Fired ___Direct Fired
Maximum design heat input and/or maximum horsepower rating: NA	**Type and Btu/hr rating of burners:** NA

List the primary fuel type(s) and if applicable, the secondary fuel type(s). For each fuel type listed, provide the maximum hourly and annual fuel usage for each.
NA

Describe each fuel expected to be used during the term of the permit.

Fuel Type	Max. Sulfur Content	Max. Ash Content	BTU Value
NA	NA	NA	NA

Emissions Data		
Criteria Pollutants	Potential Emissions	
	PPH	TPY
Carbon Monoxide (CO)	NA	NA
Nitrogen Oxides (NO_X)	NA	NA
Lead (Pb)	NA	NA
Particulate Matter ($PM_{2.5}$)	NA	NA
Particulate Matter (PM_{10})	0.022	0.09
Total Particulate Matter (TSP)	0.022	0.09
Sulfur Dioxide (SO_2)	NA	NA
Volatile Organic Compounds (VOC)	0.14	0.57
Hazardous Air Pollutants	Potential Emissions	
	PPH	TPY
Ethylene Glycol	0.12	0.46
Acetaldehyde	0.004	0.014
Regulated Pollutants other than Criteria and HAP	Potential Emissions	
	PPH	TPY
NA	NA	NA

List the method(s) used to calculate the potential emissions (include dates of any stack tests conducted, versions of software used, source and dates of emission factors, etc.).

Engineering Estimate

Applicable Requirements
List all applicable requirements for this emission unit. For each applicable requirement, include the underlying rule/regulation citation and/or construction permit with the condition number. (*Note: Title V permit condition numbers alone are not the underlying applicable requirements*). If an emission limit is calculated based on the type of source and design capacity or if a standard is based on a design parameter, this information should also be included. NA
X Permit Shield
For all applicable requirements listed above, provide monitoring/testing/recordkeeping/reporting which shall be used to demonstrate compliance. If the method is based on a permit or rule, include the condition number or citation. (Note: Each requirement listed above must have an associated method of demonstrating compliance. If there is not already a required method in place, then a method must be proposed.) NA
Are you in compliance with all applicable requirements for this emission unit? X Yes ___No If no, complete the **Schedule of Compliance Form** as **ATTACHMENT F**.

ATTACHMENT E - Emission Unit Form

Emission Unit Description

Emission unit ID number:	**Emission unit name:**	**List any control devices associated with this emission unit:**
L14-F-4070	CSS-7 Product Silo	L14-M-4070

Provide a description of the emission unit (type, method of operation, design parameters, etc.):
CSS-7 Product Silo

Manufacturer:	**Model number:**	**Serial number:**
NA	NA	NA
Construction date:	**Installation date:**	**Modification date(s):**
NA	1987	NA

Design Capacity (examples: furnaces - tons/hr, tanks - gallons):
4,000 ft^3

Maximum Hourly Throughput:	**Maximum Annual Throughput:**	**Maximum Operating Schedule:**
13,000 lb/hr	56,940 tpy	8,760 hr/yr

Fuel Usage Data **(fill out all applicable fields)**

Does this emission unit combust fuel? ___ Yes X No	**If yes, is it?** ___ Indirect Fired ___Direct Fired
Maximum design heat input and/or maximum horsepower rating: NA	**Type and Btu/hr rating of burners:** NA

List the primary fuel type(s) and if applicable, the secondary fuel type(s). For each fuel type listed, provide the maximum hourly and annual fuel usage for each.
NA

Describe each fuel expected to be used during the term of the permit.

Fuel Type	Max. Sulfur Content	Max. Ash Content	BTU Value
NA	NA	NA	NA

Emissions Data		
Criteria Pollutants	Potential Emissions	
	PPH	TPY
Carbon Monoxide (CO)	NA	NA
Nitrogen Oxides (NO_X)	NA	NA
Lead (Pb)	NA	NA
Particulate Matter ($PM_{2.5}$)	NA	NA
Particulate Matter (PM_{10})	<0.001	<0.001
Total Particulate Matter (TSP)	<0.001	<0.001
Sulfur Dioxide (SO_2)	NA	NA
Volatile Organic Compounds (VOC)	NA	NA
Hazardous Air Pollutants	Potential Emissions	
	PPH	TPY
NA	NA	NA
Regulated Pollutants other than Criteria and HAP	Potential Emissions	
	PPH	TPY
NA	NA	NA

List the method(s) used to calculate the potential emissions (include dates of any stack tests conducted, versions of software used, source and dates of emission factors, etc.).

Engineering Estimate

Applicable Requirements
List all applicable requirements for this emission unit. For each applicable requirement, include the underlying rule/regulation citation and/or <u>construction permit</u> with the condition number. (*Note: Title V permit condition numbers alone are not the underlying applicable requirements*). If an emission limit is calculated based on the type of source and design capacity or if a standard is based on a design parameter, this information should also be included. **R13-1650K §4.1.13; 45CSR §7-3.7:** • Storage structure required to have full enclosure and equipped with PM control devices.
<u>X</u> Permit Shield
For all applicable requirements listed above, provide monitoring/testing/recordkeeping/reporting which shall be used to demonstrate compliance. If the method is based on a permit or rule, include the condition number or citation. (Note: Each requirement listed above must have an associated method of demonstrating compliance. If there is not already a required method in place, then a method must be proposed.) NA
Are you in compliance with all applicable requirements for this emission unit? <u>X</u> Yes ___No If no, complete the **Schedule of Compliance Form** as **ATTACHMENT F**.

ATTACHMENT E - Emission Unit Form

Emission Unit Description

Emission unit ID number:	**Emission unit name:**	**List any control devices associated with this emission unit:**
L14-F-4080	CSS-7 Product Silo	L14-M-4080

Provide a description of the emission unit (type, method of operation, design parameters, etc.):
CSS-7 Product Silo

Manufacturer:	**Model number:**	**Serial number:**
NA	NA	NA
Construction date:	**Installation date:**	**Modification date(s):**
NA	1987	NA

Design Capacity (examples: furnaces - tons/hr, tanks - gallons):
4,000 ft^3

Maximum Hourly Throughput:	**Maximum Annual Throughput:**	**Maximum Operating Schedule:**
13,000 lb/hr	56,940 tpy	8,760 hr/yr

Fuel Usage Data **(fill out all applicable fields)**

Does this emission unit combust fuel? ___ Yes X No	**If yes, is it?** ___ Indirect Fired ___Direct Fired
Maximum design heat input and/or maximum horsepower rating: NA	**Type and Btu/hr rating of burners:** NA

List the primary fuel type(s) and if applicable, the secondary fuel type(s). For each fuel type listed, provide the maximum hourly and annual fuel usage for each.
NA

Describe each fuel expected to be used during the term of the permit.

Fuel Type	Max. Sulfur Content	Max. Ash Content	BTU Value
NA	NA	NA	NA

Emissions Data		
Criteria Pollutants	Potential Emissions	
	PPH	TPY
Carbon Monoxide (CO)	NA	NA
Nitrogen Oxides (NO_X)	NA	NA
Lead (Pb)	NA	NA
Particulate Matter ($PM_{2.5}$)	NA	NA
Particulate Matter (PM_{10})	<0.001	<0.001
Total Particulate Matter (TSP)	<0.001	<0.001
Sulfur Dioxide (SO_2)	NA	NA
Volatile Organic Compounds (VOC)	NA	NA
Hazardous Air Pollutants	Potential Emissions	
	PPH	TPY
NA	NA	NA
Regulated Pollutants other than Criteria and HAP	Potential Emissions	
	PPH	TPY
NA	NA	NA

List the method(s) used to calculate the potential emissions (include dates of any stack tests conducted, versions of software used, source and dates of emission factors, etc.).

Engineering Estimate

Applicable Requirements
List all applicable requirements for this emission unit. For each applicable requirement, include the underlying rule/regulation citation and/or <u>construction permit</u> with the condition number. (*Note: Title V permit condition numbers alone are not the underlying applicable requirements*). If an emission limit is calculated based on the type of source and design capacity or if a standard is based on a design parameter, this information should also be included. **R13-1650K §4.1.13; 45CSR §7-3.7:** • Storage structure required to have full enclosure and equipped with PM control devices.
<u>X</u> Permit Shield
For all applicable requirements listed above, provide monitoring/testing/recordkeeping/reporting which shall be used to demonstrate compliance. If the method is based on a permit or rule, include the condition number or citation. (Note: Each requirement listed above must have an associated method of demonstrating compliance. If there is not already a required method in place, then a method must be proposed.) NA
Are you in compliance with all applicable requirements for this emission unit? <u>X</u> Yes ___No If no, complete the **Schedule of Compliance Form** as **ATTACHMENT F**.

ATTACHMENT E - Emission Unit Form

Emission Unit Description

Emission unit ID number:	**Emission unit name:**	**List any control devices associated with this emission unit:**
C2C-R-5060	CSS-7 R/6 Reactor	M-2603 & C2T-B-9001

Provide a description of the emission unit (type, method of operation, design parameters, etc.):
CSS-7 R/6Reactor

Manufacturer:	**Model number:**	**Serial number:**
NA	NA	NA
Construction date:	**Installation date:**	**Modification date(s):**
NA	1988	NA

Design Capacity (examples: furnaces - tons/hr, tanks - gallons):
1,958 ft^3

Maximum Hourly Throughput:	**Maximum Annual Throughput:**	**Maximum Operating Schedule:**
13,000 lb/hr	56,940 tpy	8,760 hr/yr

Fuel Usage Data **(fill out all applicable fields)**

Does this emission unit combust fuel? ___ Yes X No	**If yes, is it?** ___ Indirect Fired ___Direct Fired
Maximum design heat input and/or maximum horsepower rating: NA	**Type and Btu/hr rating of burners:** NA

List the primary fuel type(s) and if applicable, the secondary fuel type(s). For each fuel type listed, provide the maximum hourly and annual fuel usage for each.
NA

Describe each fuel expected to be used during the term of the permit.

Fuel Type	Max. Sulfur Content	Max. Ash Content	BTU Value
NA	NA	NA	NA

Emissions Data		
Criteria Pollutants	Potential Emissions	
	PPH	TPY
Carbon Monoxide (CO)	See Emissions from Hot Oil Heater C2T-B-9001.	
Nitrogen Oxides (NO_X)		
Lead (Pb)		
Particulate Matter ($PM_{2.5}$)		
Particulate Matter (PM_{10})		
Total Particulate Matter (TSP)		
Sulfur Dioxide (SO_2)		
Volatile Organic Compounds (VOC)		
Hazardous Air Pollutants	Potential Emissions	
	PPH	TPY
See Emission from Hot Oil Heater C2T-B-9001.		
Regulated Pollutants other than Criteria and HAP	Potential Emissions	
	PPH	TPY
NA	NA	NA

List the method(s) used to calculate the potential emissions (include dates of any stack tests conducted, versions of software used, source and dates of emission factors, etc.).

Engineering Estimate

Applicable Requirements
List all applicable requirements for this emission unit. For each applicable requirement, include the underlying rule/regulation citation and/or construction permit with the condition number. (*Note: Title V permit condition numbers alone are not the underlying applicable requirements*). If an emission limit is calculated based on the type of source and design capacity or if a standard is based on a design parameter, this information should also be included. NA
X Permit Shield
For all applicable requirements listed above, provide monitoring/testing/recordkeeping/reporting which shall be used to demonstrate compliance. If the method is based on a permit or rule, include the condition number or citation. (Note: Each requirement listed above must have an associated method of demonstrating compliance. If there is not already a required method in place, then a method must be proposed.) NA
Are you in compliance with all applicable requirements for this emission unit? X Yes ___No If no, complete the **Schedule of Compliance Form** as **ATTACHMENT F**.

ATTACHMENT E - Emission Unit Form

Emission Unit Description

Emission unit ID number:	**Emission unit name:**	**List any control devices associated with this emission unit:**
C2B-M-5040	CSS-7 Surge Bin Filter	NA

Provide a description of the emission unit (type, method of operation, design parameters, etc.):
CSS-7 Surge Bin Filter

Manufacturer:	**Model number:**	**Serial number:**
NA	NA	NA
Construction date:	**Installation date:**	**Modification date(s):**
NA	1988	NA

Design Capacity (examples: furnaces - tons/hr, tanks - gallons):
1,200 acfm

Maximum Hourly Throughput:	**Maximum Annual Throughput:**	**Maximum Operating Schedule:**
13,000 lb/hr	56,940 tpy	8,760 hr/yr

Fuel Usage Data **(fill out all applicable fields)**

Does this emission unit combust fuel? ___ Yes X No	**If yes, is it?** ___ Indirect Fired ___Direct Fired
Maximum design heat input and/or maximum horsepower rating: NA	**Type and Btu/hr rating of burners:** NA

List the primary fuel type(s) and if applicable, the secondary fuel type(s). For each fuel type listed, provide the maximum hourly and annual fuel usage for each.
NA

Describe each fuel expected to be used during the term of the permit.

Fuel Type	Max. Sulfur Content	Max. Ash Content	BTU Value
NA	NA	NA	NA

Emissions Data		
Criteria Pollutants	Potential Emissions	
	PPH	TPY
Carbon Monoxide (CO)	NA	NA
Nitrogen Oxides (NO_X)	NA	NA
Lead (Pb)	NA	NA
Particulate Matter ($PM_{2.5}$)	NA	NA
Particulate Matter (PM_{10})	NA	NA
Total Particulate Matter (TSP)	NA	NA
Sulfur Dioxide (SO_2)	NA	NA
Volatile Organic Compounds (VOC)	NA	NA
Hazardous Air Pollutants	Potential Emissions	
	PPH	TPY
NA	NA	NA
Regulated Pollutants other than Criteria and HAP	Potential Emissions	
	PPH	TPY
NA	NA	NA

List the method(s) used to calculate the potential emissions (include dates of any stack tests conducted, versions of software used, source and dates of emission factors, etc.).

NA – Filter does not have a direct vent to the atmosphere.

Applicable Requirements
List all applicable requirements for this emission unit. For each applicable requirement, include the underlying rule/regulation citation and/or construction permit with the condition number. (*Note: Title V permit condition numbers alone are not the underlying applicable requirements*). If an emission limit is calculated based on the type of source and design capacity or if a standard is based on a design parameter, this information should also be included. NA
X Permit Shield
For all applicable requirements listed above, provide monitoring/testing/recordkeeping/reporting which shall be used to demonstrate compliance. If the method is based on a permit or rule, include the condition number or citation. (Note: Each requirement listed above must have an associated method of demonstrating compliance. If there is not already a required method in place, then a method must be proposed.) NA
Are you in compliance with all applicable requirements for this emission unit? X Yes ___No If no, complete the **Schedule of Compliance Form** as **ATTACHMENT F**.

ATTACHMENT E - Emission Unit Form

Emission Unit Description

Emission unit ID number:	**Emission unit name:**	**List any control devices associated with this emission unit:**
L14-F-9001	CSS-7 & CSS-8 Hot Oil Storage Tank	NA

Provide a description of the emission unit (type, method of operation, design parameters, etc.):
CSS-7 & CSS-8 Hot Oil Storage Tank

Manufacturer:	**Model number:**	**Serial number:**
NA	NA	NA
Construction date:	**Installation date:**	**Modification date(s):**
NA	1991	NA

Design Capacity (examples: furnaces - tons/hr, tanks - gallons):
17,700 gallons

Maximum Hourly Throughput:	**Maximum Annual Throughput:**	**Maximum Operating Schedule:**
NA	17,700 gpy	8,760 hr/yr

Fuel Usage Data **(fill out all applicable fields)**

Does this emission unit combust fuel? ___ Yes X No	**If yes, is it?** ___ Indirect Fired ___Direct Fired
Maximum design heat input and/or maximum horsepower rating: NA	**Type and Btu/hr rating of burners:** NA

List the primary fuel type(s) and if applicable, the secondary fuel type(s). For each fuel type listed, provide the maximum hourly and annual fuel usage for each.
NA

Describe each fuel expected to be used during the term of the permit.

Fuel Type	Max. Sulfur Content	Max. Ash Content	BTU Value
NA	NA	NA	NA

Emissions Data		
Criteria Pollutants	Potential Emissions	
	PPH	TPY
Carbon Monoxide (CO)	NA	NA
Nitrogen Oxides (NO_X)	NA	NA
Lead (Pb)	NA	NA
Particulate Matter ($PM_{2.5}$)	NA	NA
Particulate Matter (PM_{10})	NA	NA
Total Particulate Matter (TSP)	NA	NA
Sulfur Dioxide (SO_2)	NA	NA
Volatile Organic Compounds (VOC)	0.001	0.001
Hazardous Air Pollutants	Potential Emissions	
	PPH	TPY
NA	NA	NA
Regulated Pollutants other than Criteria and HAP	Potential Emissions	
	PPH	TPY
NA	NA	NA

List the method(s) used to calculate the potential emissions (include dates of any stack tests conducted, versions of software used, source and dates of emission factors, etc.).

Engineering Estimate

Applicable Requirements
List all applicable requirements for this emission unit. For each applicable requirement, include the underlying rule/regulation citation and/or construction permit with the condition number. (*Note: Title V permit condition numbers alone are not the underlying applicable requirements*). If an emission limit is calculated based on the type of source and design capacity or if a standard is based on a design parameter, this information should also be included. NA
X Permit Shield
For all applicable requirements listed above, provide monitoring/testing/recordkeeping/reporting which shall be used to demonstrate compliance. If the method is based on a permit or rule, include the condition number or citation. (Note: Each requirement listed above must have an associated method of demonstrating compliance. If there is not already a required method in place, then a method must be proposed.) NA
Are you in compliance with all applicable requirements for this emission unit? X Yes ___No If no, complete the **Schedule of Compliance Form** as **ATTACHMENT F**.

CSS-8

ATTACHMENT E - Emission Unit Form

Emission Unit Description

Emission unit ID number:	**Emission unit name:**	**List any control devices associated with this emission unit:**
L37-F-7050	CSS-8 Boxing Silo	L37-M-7130

Provide a description of the emission unit (type, method of operation, design parameters, etc.):
CSS-8 Boxing Silo

Manufacturer:	**Model number:**	**Serial number:**
NA	NA	NA
Construction date:	**Installation date:**	**Modification date(s):**
NA	1991	NA

Design Capacity (examples: furnaces - tons/hr, tanks - gallons):
1,200 ft^3

Maximum Hourly Throughput:	**Maximum Annual Throughput:**	**Maximum Operating Schedule:**
40,000 lb/hr	NA	8,760 hr/yr

Fuel Usage Data **(fill out all applicable fields)**

Does this emission unit combust fuel? ___Yes _X_ No	**If yes, is it?** ___ Indirect Fired ___Direct Fired
Maximum design heat input and/or maximum horsepower rating: NA	**Type and Btu/hr rating of burners:** NA

List the primary fuel type(s) and if applicable, the secondary fuel type(s). For each fuel type listed, provide the maximum hourly and annual fuel usage for each.
NA

Describe each fuel expected to be used during the term of the permit.

Fuel Type	Max. Sulfur Content	Max. Ash Content	BTU Value
NA	NA	NA	NA

Emissions Data		
Criteria Pollutants	Potential Emissions	
	PPH	TPY
Carbon Monoxide (CO)	NA	NA
Nitrogen Oxides (NO_X)	NA	NA
Lead (Pb)	NA	NA
Particulate Matter ($PM_{2.5}$)	NA	NA
Particulate Matter (PM_{10})	0.004	0.01
Total Particulate Matter (TSP)	0.004	0.01
Sulfur Dioxide (SO_2)	NA	NA
Volatile Organic Compounds (VOC)	NA	NA
Hazardous Air Pollutants	Potential Emissions	
	PPH	TPY
NA	NA	NA
Regulated Pollutants other than Criteria and HAP	Potential Emissions	
	PPH	TPY
NA	NA	NA

List the method(s) used to calculate the potential emissions (include dates of any stack tests conducted, versions of software used, source and dates of emission factors, etc.).

Engineering Estimate

Applicable Requirements

List all applicable requirements for this emission unit. For each applicable requirement, include the underlying rule/regulation citation and/or construction permit with the condition number. (*Note: Title V permit condition numbers alone are not the underlying applicable requirements*). If an emission limit is calculated based on the type of source and design capacity or if a standard is based on a design parameter, this information should also be included.

R13-1650K §4.1.13; 45CSR §7-3.7:

- Storage structure required to have full enclosure and equipped with PM control devices.

X Permit Shield

For all applicable requirements listed above, provide monitoring/testing/recordkeeping/reporting which shall be used to demonstrate compliance. If the method is based on a permit or rule, include the condition number or citation. (Note: Each requirement listed above must have an associated method of demonstrating compliance. If there is not already a required method in place, then a method must be proposed.)

NA

Are you in compliance with all applicable requirements for this emission unit? X Yes ___No

If no, complete the **Schedule of Compliance Form** as **ATTACHMENT F**.

ATTACHMENT E - Emission Unit Form

Emission Unit Description

Emission unit ID number:	**Emission unit name:**	**List any control devices associated with this emission unit:**
S8E-F-1440	CSS-8 Verification Bin	S8A-M-1590

Provide a description of the emission unit (type, method of operation, design parameters, etc.):
CSS-8 Verification Bin

Manufacturer:	**Model number:**	**Serial number:**
NA	NA	NA
Construction date:	**Installation date:**	**Modification date(s):**
NA	1991	NA

Design Capacity (examples: furnaces - tons/hr, tanks - gallons):
18,000 lb/hr

Maximum Hourly Throughput:	**Maximum Annual Throughput:**	**Maximum Operating Schedule:**
18,000 lb/hr	78,840 tpy	8,760 hr/yr

Fuel Usage Data **(fill out all applicable fields)**

Does this emission unit combust fuel? ___Yes _X_ No	**If yes, is it?** ___ Indirect Fired ___Direct Fired
Maximum design heat input and/or maximum horsepower rating: NA	**Type and Btu/hr rating of burners:** NA

List the primary fuel type(s) and if applicable, the secondary fuel type(s). For each fuel type listed, provide the maximum hourly and annual fuel usage for each.
NA

Describe each fuel expected to be used during the term of the permit.

Fuel Type	Max. Sulfur Content	Max. Ash Content	BTU Value
NA	NA	NA	NA

Emissions Data		
Criteria Pollutants	Potential Emissions	
	PPH	TPY
Carbon Monoxide (CO)	NA	NA
Nitrogen Oxides (NO_X)	NA	NA
Lead (Pb)	NA	NA
Particulate Matter ($PM_{2.5}$)	NA	NA
Particulate Matter (PM_{10})	Emissions included with Refeed Cyclone S8A-M-1610.	
Total Particulate Matter (TSP)	Emissions included with Refeed Cyclone S8A-M-1610.	
Sulfur Dioxide (SO_2)	NA	NA
Volatile Organic Compounds (VOC)	NA	NA
Hazardous Air Pollutants	Potential Emissions	
	PPH	TPY
NA	NA	NA
Regulated Pollutants other than Criteria and HAP	Potential Emissions	
	PPH	TPY
NA	NA	NA

List the method(s) used to calculate the potential emissions (include dates of any stack tests conducted, versions of software used, source and dates of emission factors, etc.).

Engineering Estimate

Applicable Requirements
List all applicable requirements for this emission unit. For each applicable requirement, include the underlying rule/regulation citation and/or construction permit with the condition number. (*Note: Title V permit condition numbers alone are not the underlying applicable requirements*). If an emission limit is calculated based on the type of source and design capacity or if a standard is based on a design parameter, this information should also be included.
X Permit Shield
For all applicable requirements listed above, provide monitoring/testing/recordkeeping/reporting which shall be used to demonstrate compliance. If the method is based on a permit or rule, include the condition number or citation. (Note: Each requirement listed above must have an associated method of demonstrating compliance. If there is not already a required method in place, then a method must be proposed.)
Are you in compliance with all applicable requirements for this emission unit? X Yes ___No If no, complete the **Schedule of Compliance Form** as **ATTACHMENT F**.

ATTACHMENT E - Emission Unit Form

Emission Unit Description

Emission unit ID number:	**Emission unit name:**	**List any control devices associated with this emission unit:**
S8A-E-3240/ S8A-B-3010	CSS-8 Crystallizer & Heater	S8A-M-3350

Provide a description of the emission unit (type, method of operation, design parameters, etc.):
CSS-8 Crystallizer & Heater

Manufacturer:	**Model number:**	**Serial number:**
NA	NA	NA
Construction date:	**Installation date:**	**Modification date(s):**
NA	1991	NA

Design Capacity (examples: furnaces - tons/hr, tanks - gallons):
68.4 ft^2/2.152 mmBtu/hr

Maximum Hourly Throughput:	**Maximum Annual Throughput:**	**Maximum Operating Schedule:**
18,000 lb/hr	78,840 tpy	8,760 hr/yr

Fuel Usage Data **(fill out all applicable fields)**

Does this emission unit combust fuel? X Yes ___ No	**If yes, is it?** ___ Indirect Fired X Direct Fired
Maximum design heat input and/or maximum horsepower rating: 2.15 mmBtu/hr	**Type and Btu/hr rating of burners:** 2.15 mmBtu/hr

List the primary fuel type(s) and if applicable, the secondary fuel type(s). For each fuel type listed, provide the maximum hourly and annual fuel usage for each.
Natural Gas - 2,240 SCF/hr, 19 mmSCF/yr

Describe each fuel expected to be used during the term of the permit.

Fuel Type	Max. Sulfur Content	Max. Ash Content	BTU Value
Natural Gas	0.01 wt%	NA	960 Btu/scf

Emissions Data		
Criteria Pollutants	Potential Emissions	
	PPH	TPY
Carbon Monoxide (CO)	0.05	0.19
Nitrogen Oxides (NO_X)	0.22	0.90
Lead (Pb)	NA	NA
Particulate Matter ($PM_{2.5}$)	NA	NA
Particulate Matter (PM_{10})	0.07	0.31
Total Particulate Matter (TSP)	0.07	0.31
Sulfur Dioxide (SO_2)	0.001	0.01
Volatile Organic Compounds (VOC)	0.09	0.38
Hazardous Air Pollutants	Potential Emissions	
	PPH	TPY
Ethylene Glycol	0.04	0.16
Regulated Pollutants other than Criteria and HAP	Potential Emissions	
	PPH	TPY
NA	NA	NA

List the method(s) used to calculate the potential emissions (include dates of any stack tests conducted, versions of software used, source and dates of emission factors, etc.).

Engineering Estimate

Applicable Requirements
List all applicable requirements for this emission unit. For each applicable requirement, include the underlying rule/regulation citation and/or construction permit with the condition number. (*Note: Title V permit condition numbers alone are not the underlying applicable requirements*). If an emission limit is calculated based on the type of source and design capacity or if a standard is based on a design parameter, this information should also be included. NA
X Permit Shield
For all applicable requirements listed above, provide monitoring/testing/recordkeeping/reporting which shall be used to demonstrate compliance. If the method is based on a permit or rule, include the condition number or citation. (Note: Each requirement listed above must have an associated method of demonstrating compliance. If there is not already a required method in place, then a method must be proposed.) NA
Are you in compliance with all applicable requirements for this emission unit? X Yes ___No If no, complete the **Schedule of Compliance Form** as **ATTACHMENT F**.

ATTACHMENT E - Emission Unit Form

Emission Unit Description

Emission unit ID number:	**Emission unit name:**	**List any control devices associated with this emission unit:**
S8A-F-2430	CSS-8 Crystallizer Surge Bin	S8A-M-2390

Provide a description of the emission unit (type, method of operation, design parameters, etc.):
CSS-8 Crystallizer Surge Bin

Manufacturer:	**Model number:**	**Serial number:**
NA	NA	NA
Construction date:	**Installation date:**	**Modification date(s):**
NA	1991	NA

Design Capacity (examples: furnaces - tons/hr, tanks - gallons):
1,244 ft^3

Maximum Hourly Throughput:	**Maximum Annual Throughput:**	**Maximum Operating Schedule:**
18,000 lb/hr	78,840 tpy	8,760 hr/yr

Fuel Usage Data **(fill out all applicable fields)**

Does this emission unit combust fuel? ___Yes _X_ No	**If yes, is it?** ___ Indirect Fired ___Direct Fired
Maximum design heat input and/or maximum horsepower rating: NA	**Type and Btu/hr rating of burners:** NA

List the primary fuel type(s) and if applicable, the secondary fuel type(s). For each fuel type listed, provide the maximum hourly and annual fuel usage for each.
NA

Describe each fuel expected to be used during the term of the permit.

Fuel Type	Max. Sulfur Content	Max. Ash Content	BTU Value
NA	NA	NA	NA

Emissions Data		
Criteria Pollutants	Potential Emissions	
	PPH	TPY
Carbon Monoxide (CO)	NA	NA
Nitrogen Oxides (NO_X)	NA	NA
Lead (Pb)	NA	NA
Particulate Matter ($PM_{2.5}$)	NA	NA
Particulate Matter (PM_{10})	0.003	0.01
Total Particulate Matter (TSP)	0.003	0.01
Sulfur Dioxide (SO_2)	NA	NA
Volatile Organic Compounds (VOC)	NA	NA
Hazardous Air Pollutants	Potential Emissions	
	PPH	TPY
NA	NA	NA
Regulated Pollutants other than Criteria and HAP	Potential Emissions	
	PPH	TPY
NA	NA	NA

List the method(s) used to calculate the potential emissions (include dates of any stack tests conducted, versions of software used, source and dates of emission factors, etc.).

Engineering Estimate

Applicable Requirements
List all applicable requirements for this emission unit. For each applicable requirement, include the underlying rule/regulation citation and/or construction permit with the condition number. (*Note: Title V permit condition numbers alone are not the underlying applicable requirements*). If an emission limit is calculated based on the type of source and design capacity or if a standard is based on a design parameter, this information should also be included. NA
X Permit Shield
For all applicable requirements listed above, provide monitoring/testing/recordkeeping/reporting which shall be used to demonstrate compliance. If the method is based on a permit or rule, include the condition number or citation. (Note: Each requirement listed above must have an associated method of demonstrating compliance. If there is not already a required method in place, then a method must be proposed.) NA
Are you in compliance with all applicable requirements for this emission unit? X Yes ___No If no, complete the **Schedule of Compliance Form** as **ATTACHMENT F**.

ATTACHMENT E - Emission Unit Form

Emission Unit Description

Emission unit ID number:	**Emission unit name:**	**List any control devices associated with this emission unit:**
L11-U-1030	CSS-8 Fines Elutriator	NA

Provide a description of the emission unit (type, method of operation, design parameters, etc.):
CSS-8 Fines Elutriator

Manufacturer:	**Model number:**	**Serial number:**
NA	NA	NA
Construction date:	**Installation date:**	**Modification date(s):**
NA	1991	NA

Design Capacity (examples: furnaces - tons/hr, tanks - gallons):
150 ft^2

Maximum Hourly Throughput:	**Maximum Annual Throughput:**	**Maximum Operating Schedule:**
30,000 lb/hr	NA	8,760 hr/yr

Fuel Usage Data **(fill out all applicable fields)**

Does this emission unit combust fuel? ___Yes X No	**If yes, is it?** ___ Indirect Fired ___Direct Fired
Maximum design heat input and/or maximum horsepower rating: NA	**Type and Btu/hr rating of burners:** NA

List the primary fuel type(s) and if applicable, the secondary fuel type(s). For each fuel type listed, provide the maximum hourly and annual fuel usage for each.
NA

Describe each fuel expected to be used during the term of the permit.

Fuel Type	Max. Sulfur Content	Max. Ash Content	BTU Value
NA	NA	NA	NA

Emissions Data		
Criteria Pollutants	Potential Emissions	
	PPH	TPY
Carbon Monoxide (CO)	NA	NA
Nitrogen Oxides (NO_X)	NA	NA
Lead (Pb)	NA	NA
Particulate Matter ($PM_{2.5}$)	0.001	0.05
Particulate Matter (PM_{10})	0.001	0.05
Total Particulate Matter (TSP)	NA	NA
Sulfur Dioxide (SO_2)	NA	NA
Volatile Organic Compounds (VOC)	NA	NA
Hazardous Air Pollutants	Potential Emissions	
	PPH	TPY
NA	NA	NA
Regulated Pollutants other than Criteria and HAP	Potential Emissions	
	PPH	TPY
NA	NA	NA

List the method(s) used to calculate the potential emissions (include dates of any stack tests conducted, versions of software used, source and dates of emission factors, etc.).

Engineering Estimate

Applicable Requirements
List all applicable requirements for this emission unit. For each applicable requirement, include the underlying rule/regulation citation and/or construction permit with the condition number. (*Note: Title V permit condition numbers alone are not the underlying applicable requirements*). If an emission limit is calculated based on the type of source and design capacity or if a standard is based on a design parameter, this information should also be included. NA
X Permit Shield
For all applicable requirements listed above, provide monitoring/testing/recordkeeping/reporting which shall be used to demonstrate compliance. If the method is based on a permit or rule, include the condition number or citation. (Note: Each requirement listed above must have an associated method of demonstrating compliance. If there is not already a required method in place, then a method must be proposed.) NA
Are you in compliance with all applicable requirements for this emission unit? X Yes ___No If no, complete the **Schedule of Compliance Form** as **ATTACHMENT F**.

ATTACHMENT E - Emission Unit Form

Emission Unit Description

Emission unit ID number:	**Emission unit name:**	**List any control devices associated with this emission unit:**
L12-M-4030	CSS-8 Fines Elutriator	NA

Provide a description of the emission unit (type, method of operation, design parameters, etc.):
CSS-8 Fines Elutriator

Manufacturer:	**Model number:**	**Serial number:**
NA	NA	NA
Construction date:	**Installation date:**	**Modification date(s):**
NA	1991	NA

Design Capacity (examples: furnaces - tons/hr, tanks - gallons):
150 ft^2

Maximum Hourly Throughput:	**Maximum Annual Throughput:**	**Maximum Operating Schedule:**
30,000 lb/hr	NA	8,760 hr/yr

Fuel Usage Data **(fill out all applicable fields)**

Does this emission unit combust fuel? ___Yes _X_ No	**If yes, is it?** ___ Indirect Fired ___Direct Fired
Maximum design heat input and/or maximum horsepower rating: NA	**Type and Btu/hr rating of burners:** NA

List the primary fuel type(s) and if applicable, the secondary fuel type(s). For each fuel type listed, provide the maximum hourly and annual fuel usage for each.
NA

Describe each fuel expected to be used during the term of the permit.

Fuel Type	Max. Sulfur Content	Max. Ash Content	BTU Value
NA	NA	NA	NA

Emissions Data		
Criteria Pollutants	Potential Emissions	
	PPH	TPY
Carbon Monoxide (CO)	NA	NA
Nitrogen Oxides (NO_X)	NA	NA
Lead (Pb)	NA	NA
Particulate Matter ($PM_{2.5}$)	0.005	0.02
Particulate Matter (PM_{10})	0.005	0.02
Total Particulate Matter (TSP)	NA	NA
Sulfur Dioxide (SO_2)	NA	NA
Volatile Organic Compounds (VOC)	NA	NA
Hazardous Air Pollutants	Potential Emissions	
	PPH	TPY
NA	NA	NA
Regulated Pollutants other than Criteria and HAP	Potential Emissions	
	PPH	TPY
NA	NA	NA

List the method(s) used to calculate the potential emissions (include dates of any stack tests conducted, versions of software used, source and dates of emission factors, etc.).

Engineering Estimate

Applicable Requirements
List all applicable requirements for this emission unit. For each applicable requirement, include the underlying rule/regulation citation and/or construction permit with the condition number. (*Note: Title V permit condition numbers alone are not the underlying applicable requirements*). If an emission limit is calculated based on the type of source and design capacity or if a standard is based on a design parameter, this information should also be included. NA
X Permit Shield
For all applicable requirements listed above, provide monitoring/testing/recordkeeping/reporting which shall be used to demonstrate compliance. If the method is based on a permit or rule, include the condition number or citation. (Note: Each requirement listed above must have an associated method of demonstrating compliance. If there is not already a required method in place, then a method must be proposed.) NA
Are you in compliance with all applicable requirements for this emission unit? X Yes ___No If no, complete the **Schedule of Compliance Form** as **ATTACHMENT F**.

ATTACHMENT E - Emission Unit Form

Emission Unit Description

Emission unit ID number:	**Emission unit name:**	**List any control devices associated with this emission unit:**
L13-U-3030	CSS-8 Fines Elutriator	NA

Provide a description of the emission unit (type, method of operation, design parameters, etc.):
CSS-8 Fines Elutriator

Manufacturer:	**Model number:**	**Serial number:**
NA	NA	NA
Construction date:	**Installation date:**	**Modification date(s):**
NA	1991	NA

Design Capacity (examples: furnaces - tons/hr, tanks - gallons):
150 ft^2

Maximum Hourly Throughput:	**Maximum Annual Throughput:**	**Maximum Operating Schedule:**
30,000 lb/hr	NA	8,760 hr/yr

Fuel Usage Data **(fill out all applicable fields)**

Does this emission unit combust fuel? ___Yes _X_ No	**If yes, is it?** ___ Indirect Fired ___Direct Fired
Maximum design heat input and/or maximum horsepower rating: NA	**Type and Btu/hr rating of burners:** NA

List the primary fuel type(s) and if applicable, the secondary fuel type(s). For each fuel type listed, provide the maximum hourly and annual fuel usage for each.
NA

Describe each fuel expected to be used during the term of the permit.

Fuel Type	Max. Sulfur Content	Max. Ash Content	BTU Value
NA	NA	NA	NA

Emissions Data		
Criteria Pollutants	Potential Emissions	
	PPH	TPY
Carbon Monoxide (CO)	NA	NA
Nitrogen Oxides (NO_X)	NA	NA
Lead (Pb)	NA	NA
Particulate Matter ($PM_{2.5}$)	0.001	0.05
Particulate Matter (PM_{10})	0.001	0.05
Total Particulate Matter (TSP)	NA	NA
Sulfur Dioxide (SO_2)	NA	NA
Volatile Organic Compounds (VOC)	NA	NA
Hazardous Air Pollutants	Potential Emissions	
	PPH	TPY
NA	NA	NA
Regulated Pollutants other than Criteria and HAP	Potential Emissions	
	PPH	TPY
NA	NA	NA

List the method(s) used to calculate the potential emissions (include dates of any stack tests conducted, versions of software used, source and dates of emission factors, etc.).

Engineering Estimate

Applicable Requirements
List all applicable requirements for this emission unit. For each applicable requirement, include the underlying rule/regulation citation and/or construction permit with the condition number. (*Note: Title V permit condition numbers alone are not the underlying applicable requirements*). If an emission limit is calculated based on the type of source and design capacity or if a standard is based on a design parameter, this information should also be included. NA
X Permit Shield
For all applicable requirements listed above, provide monitoring/testing/recordkeeping/reporting which shall be used to demonstrate compliance. If the method is based on a permit or rule, include the condition number or citation. (Note: Each requirement listed above must have an associated method of demonstrating compliance. If there is not already a required method in place, then a method must be proposed.) NA
Are you in compliance with all applicable requirements for this emission unit? X Yes ___No If no, complete the **Schedule of Compliance Form** as **ATTACHMENT F**.

ATTACHMENT E - Emission Unit Form

Emission Unit Description

Emission unit ID number:	**Emission unit name:**	**List any control devices associated with this emission unit:**
L37-M-7150	CSS-8 Fines Elutriator	NA

Provide a description of the emission unit (type, method of operation, design parameters, etc.):
CSS-8 Fines Elutriator

Manufacturer:	**Model number:**	**Serial number:**
NA	NA	NA
Construction date:	**Installation date:**	**Modification date(s):**
NA	1991	NA

Design Capacity (examples: furnaces - tons/hr, tanks - gallons):
700 acfm

Maximum Hourly Throughput:	**Maximum Annual Throughput:**	**Maximum Operating Schedule:**
25,000 lb/hr	NA	8,760 hr/yr

Fuel Usage Data **(fill out all applicable fields)**

Does this emission unit combust fuel? ___Yes _X_ No	**If yes, is it?** ___ Indirect Fired ___Direct Fired
Maximum design heat input and/or maximum horsepower rating: NA	**Type and Btu/hr rating of burners:** NA

List the primary fuel type(s) and if applicable, the secondary fuel type(s). For each fuel type listed, provide the maximum hourly and annual fuel usage for each.
NA

Describe each fuel expected to be used during the term of the permit.

Fuel Type	Max. Sulfur Content	Max. Ash Content	BTU Value
NA	NA	NA	NA

Emissions Data		
Criteria Pollutants	Potential Emissions	
	PPH	TPY
Carbon Monoxide (CO)	NA	NA
Nitrogen Oxides (NO_X)	NA	NA
Lead (Pb)	NA	NA
Particulate Matter ($PM_{2.5}$)	0.004	0.01
Particulate Matter (PM_{10})	0.004	0.01
Total Particulate Matter (TSP)	NA	NA
Sulfur Dioxide (SO_2)	NA	NA
Volatile Organic Compounds (VOC)	NA	NA
Hazardous Air Pollutants	Potential Emissions	
	PPH	TPY
NA	NA	NA
Regulated Pollutants other than Criteria and HAP	Potential Emissions	
	PPH	TPY
NA	NA	NA

List the method(s) used to calculate the potential emissions (include dates of any stack tests conducted, versions of software used, source and dates of emission factors, etc.).

Engineering Estimate

Applicable Requirements
List all applicable requirements for this emission unit. For each applicable requirement, include the underlying rule/regulation citation and/or construction permit with the condition number. (*Note: Title V permit condition numbers alone are not the underlying applicable requirements*). If an emission limit is calculated based on the type of source and design capacity or if a standard is based on a design parameter, this information should also be included. NA
X Permit Shield
For all applicable requirements listed above, provide monitoring/testing/recordkeeping/reporting which shall be used to demonstrate compliance. If the method is based on a permit or rule, include the condition number or citation. (Note: Each requirement listed above must have an associated method of demonstrating compliance. If there is not already a required method in place, then a method must be proposed.) NA
Are you in compliance with all applicable requirements for this emission unit? X Yes ___No If no, complete the **Schedule of Compliance Form** as **ATTACHMENT F**.

ATTACHMENT E - Emission Unit Form

Emission Unit Description

Emission unit ID number:	**Emission unit name:**	**List any control devices associated with this emission unit:**
S8A-E-2250/ S8A-B-2020	CSS-8 Preheater & Heater	S8B-M-2420

Provide a description of the emission unit (type, method of operation, design parameters, etc.):
CSS-8 Preheater & Heater

Manufacturer:	**Model number:**	**Serial number:**
NA	NA	NA
Construction date:	**Installation date:**	**Modification date(s):**
NA	1991	NA

Design Capacity (examples: furnaces - tons/hr, tanks - gallons):
27.7 ft^2/0.98 mmBtu/hr

Maximum Hourly Throughput:	**Maximum Annual Throughput:**	**Maximum Operating Schedule:**
18,000 lb/hr	78,840 tpy	8,760 hr/yr

Fuel Usage Data **(fill out all applicable fields)**

Does this emission unit combust fuel? _X_ Yes ___ No	**If yes, is it?** ___ Indirect Fired _X_ Direct Fired
Maximum design heat input and/or maximum horsepower rating: 0.98 mmBtu/hr	**Type and Btu/hr rating of burners:** 0.98 mmBtu/hr

List the primary fuel type(s) and if applicable, the secondary fuel type(s). For each fuel type listed, provide the maximum hourly and annual fuel usage for each.
Natural Gas - 1,020 SCF/hr, 8.9 mmscf/yr

Describe each fuel expected to be used during the term of the permit.

Fuel Type	Max. Sulfur Content	Max. Ash Content	BTU Value
Natural Gas	0.01 wt%	NA	960Btu/scf

Emissions Data		
Criteria Pollutants	Potential Emissions	
	PPH	TPY
Carbon Monoxide (CO)	0.02	0.09
Nitrogen Oxides (NO_X)	0.10	0.40
Lead (Pb)	NA	NA
Particulate Matter ($PM_{2.5}$)	NA	NA
Particulate Matter (PM_{10})	0.04	0.18
Total Particulate Matter (TSP)	0.04	0.18
Sulfur Dioxide (SO_2)	0.001	0.003
Volatile Organic Compounds (VOC)	0.08	0.35
Hazardous Air Pollutants	Potential Emissions	
	PPH	TPY
Ethylene Glycol	0.03	0.12
Actealdehyde	0.04	0.19
Regulated Pollutants other than Criteria and HAP	Potential Emissions	
	PPH	TPY
NA	NA	NA

List the method(s) used to calculate the potential emissions (include dates of any stack tests conducted, versions of software used, source and dates of emission factors, etc.).

Engineering Estimate

Applicable Requirements
List all applicable requirements for this emission unit. For each applicable requirement, include the underlying rule/regulation citation and/or construction permit with the condition number. (*Note: Title V permit condition numbers alone are not the underlying applicable requirements*). If an emission limit is calculated based on the type of source and design capacity or if a standard is based on a design parameter, this information should also be included. NA
X Permit Shield
For all applicable requirements listed above, provide monitoring/testing/recordkeeping/reporting which shall be used to demonstrate compliance. If the method is based on a permit or rule, include the condition number or citation. (Note: Each requirement listed above must have an associated method of demonstrating compliance. If there is not already a required method in place, then a method must be proposed.) NA
Are you in compliance with all applicable requirements for this emission unit? X Yes ___No If no, complete the **Schedule of Compliance Form** as **ATTACHMENT F**.

ATTACHMENT E - Emission Unit Form

Emission Unit Description

Emission unit ID number:	**Emission unit name:**	**List any control devices associated with this emission unit:**
S8A-E-1420	CSS-8 Preheater Surge Bin	C2T-B-9001

Provide a description of the emission unit (type, method of operation, design parameters, etc.):
CSS-8 Preheater Surge Bin

Manufacturer:	**Model number:**	**Serial number:**
NA	NA	NA
Construction date:	**Installation date:**	**Modification date(s):**
NA	1991	NA

Design Capacity (examples: furnaces - tons/hr, tanks - gallons):
930 ft^3

Maximum Hourly Throughput:	**Maximum Annual Throughput:**	**Maximum Operating Schedule:**
18,000 lb/hr	78,840 tpy	8,760 hr/yr

Fuel Usage Data **(fill out all applicable fields)**

Does this emission unit combust fuel? ___Yes _X_ No	**If yes, is it?** ___ Indirect Fired ___Direct Fired
Maximum design heat input and/or maximum horsepower rating: NA	**Type and Btu/hr rating of burners:** NA

List the primary fuel type(s) and if applicable, the secondary fuel type(s). For each fuel type listed, provide the maximum hourly and annual fuel usage for each.
NA

Describe each fuel expected to be used during the term of the permit.

Fuel Type	Max. Sulfur Content	Max. Ash Content	BTU Value
NA	NA	NA	NA

Emissions Data		
Criteria Pollutants	Potential Emissions	
	PPH	TPY
Carbon Monoxide (CO)	See emissions from Hot Oil Heater C2T-B-9001.	
Nitrogen Oxides (NO_X)		
Lead (Pb)		
Particulate Matter ($PM_{2.5}$)		
Particulate Matter (PM_{10})		
Total Particulate Matter (TSP)		
Sulfur Dioxide (SO_2)		
Volatile Organic Compounds (VOC)		
Hazardous Air Pollutants	Potential Emissions	
	PPH	TPY
See emissions from Hot Oil Heater C2T-B-9001.		
Regulated Pollutants other than Criteria and HAP	Potential Emissions	
	PPH	TPY
NA	NA	NA

List the method(s) used to calculate the potential emissions (include dates of any stack tests conducted, versions of software used, source and dates of emission factors, etc.).

Engineering Estimate

Applicable Requirements
List all applicable requirements for this emission unit. For each applicable requirement, include the underlying rule/regulation citation and/or construction permit with the condition number. (*Note: Title V permit condition numbers alone are not the underlying applicable requirements*). If an emission limit is calculated based on the type of source and design capacity or if a standard is based on a design parameter, this information should also be included. NA
X Permit Shield
For all applicable requirements listed above, provide monitoring/testing/recordkeeping/reporting which shall be used to demonstrate compliance. If the method is based on a permit or rule, include the condition number or citation. (Note: Each requirement listed above must have an associated method of demonstrating compliance. If there is not already a required method in place, then a method must be proposed.) NA
Are you in compliance with all applicable requirements for this emission unit? X Yes ___No If no, complete the **Schedule of Compliance Form** as **ATTACHMENT F**.

ATTACHMENT E - Emission Unit Form

Emission Unit Description

Emission unit ID number:	**Emission unit name:**	**List any control devices associated with this emission unit:**
S8D-E-1280	CSS-8 Product Cooler	S8D-M-1520

Provide a description of the emission unit (type, method of operation, design parameters, etc.):
CSS-8 Product Cooler

Manufacturer:	**Model number:**	**Serial number:**
NA	NA	NA
Construction date:	**Installation date:**	**Modification date(s):**
NA	1991	NA

Design Capacity (examples: furnaces - tons/hr, tanks - gallons):
18,000 lb/hr

Maximum Hourly Throughput:	**Maximum Annual Throughput:**	**Maximum Operating Schedule:**
18,000 lb/hr	78,840 tpy	8,760 hr/yr

Fuel Usage Data **(fill out all applicable fields)**

Does this emission unit combust fuel? ___Yes _X_ No	**If yes, is it?** ___ Indirect Fired ___Direct Fired
Maximum design heat input and/or maximum horsepower rating: NA	**Type and Btu/hr rating of burners:** NA

List the primary fuel type(s) and if applicable, the secondary fuel type(s). For each fuel type listed, provide the maximum hourly and annual fuel usage for each.
NA

Describe each fuel expected to be used during the term of the permit.

Fuel Type	Max. Sulfur Content	Max. Ash Content	BTU Value
NA	NA	NA	NA

Emissions Data		
Criteria Pollutants	Potential Emissions	
	PPH	TPY
Carbon Monoxide (CO)	NA	NA
Nitrogen Oxides (NO_X)	NA	NA
Lead (Pb)	NA	NA
Particulate Matter ($PM_{2.5}$)	NA	NA
Particulate Matter (PM_{10})	0.02	0.08
Total Particulate Matter (TSP)	0.02	0.08
Sulfur Dioxide (SO_2)	NA	NA
Volatile Organic Compounds (VOC)	NA	NA
Hazardous Air Pollutants	Potential Emissions	
	PPH	TPY
NA	NA	NA
Regulated Pollutants other than Criteria and HAP	Potential Emissions	
	PPH	TPY
NA	NA	NA

List the method(s) used to calculate the potential emissions (include dates of any stack tests conducted, versions of software used, source and dates of emission factors, etc.).

Engineering Estimate

Applicable Requirements
List all applicable requirements for this emission unit. For each applicable requirement, include the underlying rule/regulation citation and/or construction permit with the condition number. (*Note: Title V permit condition numbers alone are not the underlying applicable requirements*). If an emission limit is calculated based on the type of source and design capacity or if a standard is based on a design parameter, this information should also be included. NA
X Permit Shield
For all applicable requirements listed above, provide monitoring/testing/recordkeeping/reporting which shall be used to demonstrate compliance. If the method is based on a permit or rule, include the condition number or citation. (Note: Each requirement listed above must have an associated method of demonstrating compliance. If there is not already a required method in place, then a method must be proposed.) NA
Are you in compliance with all applicable requirements for this emission unit? X Yes ___No If no, complete the **Schedule of Compliance Form** as **ATTACHMENT F**.

ATTACHMENT E - Emission Unit Form

Emission Unit Description

Emission unit ID number:	**Emission unit name:**	**List any control devices associated with this emission unit:**
L12-F-2030	CSS-8 Product Silo	L12-M-2030

Provide a description of the emission unit (type, method of operation, design parameters, etc.):
CSS-8 Product Silo

Manufacturer:	**Model number:**	**Serial number:**
NA	NA	NA
Construction date:	**Installation date:**	**Modification date(s):**
NA	1987	NA

Design Capacity (examples: furnaces - tons/hr, tanks - gallons):
85 ft^2

Maximum Hourly Throughput:	**Maximum Annual Throughput:**	**Maximum Operating Schedule:**
18,000 lb/hr	78,840 tpy	8,760 hr/yr

Fuel Usage Data **(fill out all applicable fields)**

Does this emission unit combust fuel? ___Yes _X_ No	**If yes, is it?** ___ Indirect Fired ___Direct Fired
Maximum design heat input and/or maximum horsepower rating: NA	**Type and Btu/hr rating of burners:** NA

List the primary fuel type(s) and if applicable, the secondary fuel type(s). For each fuel type listed, provide the maximum hourly and annual fuel usage for each.
NA

Describe each fuel expected to be used during the term of the permit.

Fuel Type	Max. Sulfur Content	Max. Ash Content	BTU Value
NA	NA	NA	NA

Emissions Data		
Criteria Pollutants	Potential Emissions	
	PPH	TPY
Carbon Monoxide (CO)	NA	NA
Nitrogen Oxides (NO_X)	NA	NA
Lead (Pb)	NA	NA
Particulate Matter ($PM_{2.5}$)	<0.001	0.001
Particulate Matter (PM_{10})	<0.001	0.001
Total Particulate Matter (TSP)	NA	NA
Sulfur Dioxide (SO_2)	NA	NA
Volatile Organic Compounds (VOC)	NA	NA
Hazardous Air Pollutants	Potential Emissions	
	PPH	TPY
NA	NA	NA
Regulated Pollutants other than Criteria and HAP	Potential Emissions	
	PPH	TPY
NA	NA	NA

List the method(s) used to calculate the potential emissions (include dates of any stack tests conducted, versions of software used, source and dates of emission factors, etc.).

Engineering Estimate

Applicable Requirements

List all applicable requirements for this emission unit. For each applicable requirement, include the underlying rule/regulation citation and/or construction permit with the condition number. (*Note: Title V permit condition numbers alone are not the underlying applicable requirements*). If an emission limit is calculated based on the type of source and design capacity or if a standard is based on a design parameter, this information should also be included.

R13-1650K §4.1.13; 45CSR §7-3.7:

- Storage structure required to have full enclosure and equipped with PM control devices.

X Permit Shield

For all applicable requirements listed above, provide monitoring/testing/recordkeeping/reporting which shall be used to demonstrate compliance. If the method is based on a permit or rule, include the condition number or citation. (Note: Each requirement listed above must have an associated method of demonstrating compliance. If there is not already a required method in place, then a method must be proposed.)

NA

Are you in compliance with all applicable requirements for this emission unit? X Yes ___No

If no, complete the **Schedule of Compliance Form** as **ATTACHMENT F**.

ATTACHMENT E - Emission Unit Form

Emission Unit Description

Emission unit ID number:	**Emission unit name:**	**List any control devices associated with this emission unit:**
L12-F-2040	CSS-8 Product Silo	L12-M-2040

Provide a description of the emission unit (type, method of operation, design parameters, etc.):
CSS-8 Product Silo

Manufacturer:	**Model number:**	**Serial number:**
NA	NA	NA
Construction date:	**Installation date:**	**Modification date(s):**
NA	1987	NA

Design Capacity (examples: furnaces - tons/hr, tanks - gallons):
85 ft^2

Maximum Hourly Throughput:	**Maximum Annual Throughput:**	**Maximum Operating Schedule:**
18,000 lb/hr	78,840 tpy	8,760 hr/yr

Fuel Usage Data **(fill out all applicable fields)**

Does this emission unit combust fuel? ___Yes _X_ No	**If yes, is it?** ___ Indirect Fired ___Direct Fired
Maximum design heat input and/or maximum horsepower rating: NA	**Type and Btu/hr rating of burners:** NA

List the primary fuel type(s) and if applicable, the secondary fuel type(s). For each fuel type listed, provide the maximum hourly and annual fuel usage for each.
NA

Describe each fuel expected to be used during the term of the permit.

Fuel Type	Max. Sulfur Content	Max. Ash Content	BTU Value
NA	NA	NA	NA

Emissions Data		
Criteria Pollutants	Potential Emissions	
	PPH	TPY
Carbon Monoxide (CO)	NA	NA
Nitrogen Oxides (NO_X)	NA	NA
Lead (Pb)	NA	NA
Particulate Matter ($PM_{2.5}$)	<0.001	0.001
Particulate Matter (PM_{10})	<0.001	0.001
Total Particulate Matter (TSP)	NA	NA
Sulfur Dioxide (SO_2)	NA	NA
Volatile Organic Compounds (VOC)	NA	NA
Hazardous Air Pollutants	Potential Emissions	
	PPH	TPY
NA	NA	NA
Regulated Pollutants other than Criteria and HAP	Potential Emissions	
	PPH	TPY
NA	NA	NA

List the method(s) used to calculate the potential emissions (include dates of any stack tests conducted, versions of software used, source and dates of emission factors, etc.).

Engineering Estimate

Applicable Requirements

List all applicable requirements for this emission unit. For each applicable requirement, include the underlying rule/regulation citation and/or construction permit with the condition number. (*Note: Title V permit condition numbers alone are not the underlying applicable requirements*). If an emission limit is calculated based on the type of source and design capacity or if a standard is based on a design parameter, this information should also be included.

R13-1650K §4.1.13; 45CSR §7-3.7:

- Storage structure required to have full enclosure and equipped with PM control devices.

X Permit Shield

For all applicable requirements listed above, provide monitoring/testing/recordkeeping/reporting which shall be used to demonstrate compliance. If the method is based on a permit or rule, include the condition number or citation. (Note: Each requirement listed above must have an associated method of demonstrating compliance. If there is not already a required method in place, then a method must be proposed.)

NA

Are you in compliance with all applicable requirements for this emission unit? X Yes ___No

If no, complete the **Schedule of Compliance Form** as **ATTACHMENT F**.

ATTACHMENT E - Emission Unit Form

Emission Unit Description

Emission unit ID number:	**Emission unit name:**	**List any control devices associated with this emission unit:**
L13-F-3050	CSS-8 Product Silo	L13-M-3050

Provide a description of the emission unit (type, method of operation, design parameters, etc.):
CSS-8 Product Silo

Manufacturer:	**Model number:**	**Serial number:**
NA	NA	NA
Construction date:	**Installation date:**	**Modification date(s):**
NA	1987	NA

Design Capacity (examples: furnaces - tons/hr, tanks - gallons):
4,000 ft^3

Maximum Hourly Throughput:	**Maximum Annual Throughput:**	**Maximum Operating Schedule:**
18,000 lb/hr	78,840 tpy	8,760 hr/yr

Fuel Usage Data **(fill out all applicable fields)**

Does this emission unit combust fuel? ___Yes _X_ No	**If yes, is it?** ___ Indirect Fired ___Direct Fired
Maximum design heat input and/or maximum horsepower rating: NA	**Type and Btu/hr rating of burners:** NA

List the primary fuel type(s) and if applicable, the secondary fuel type(s). For each fuel type listed, provide the maximum hourly and annual fuel usage for each.
NA

Describe each fuel expected to be used during the term of the permit.

Fuel Type	Max. Sulfur Content	Max. Ash Content	BTU Value
NA	NA	NA	NA

Emissions Data		
Criteria Pollutants	Potential Emissions	
	PPH	TPY
Carbon Monoxide (CO)	NA	NA
Nitrogen Oxides (NO_X)	NA	NA
Lead (Pb)	NA	NA
Particulate Matter ($PM_{2.5}$)	<0.001	0.001
Particulate Matter (PM_{10})	<0.001	0.001
Total Particulate Matter (TSP)	NA	NA
Sulfur Dioxide (SO_2)	NA	NA
Volatile Organic Compounds (VOC)	NA	NA
Hazardous Air Pollutants	Potential Emissions	
	PPH	TPY
NA	NA	NA
Regulated Pollutants other than Criteria and HAP	Potential Emissions	
	PPH	TPY
NA	NA	NA

List the method(s) used to calculate the potential emissions (include dates of any stack tests conducted, versions of software used, source and dates of emission factors, etc.).

Engineering Estimate

Applicable Requirements

List all applicable requirements for this emission unit. For each applicable requirement, include the underlying rule/regulation citation and/or construction permit with the condition number. (*Note: Title V permit condition numbers alone are not the underlying applicable requirements*). If an emission limit is calculated based on the type of source and design capacity or if a standard is based on a design parameter, this information should also be included.

R13-1650K §4.1.13; 45CSR §7-3.7:

- Storage structure required to have full enclosure and equipped with PM control devices.

X Permit Shield

For all applicable requirements listed above, provide monitoring/testing/recordkeeping/reporting which shall be used to demonstrate compliance. If the method is based on a permit or rule, include the condition number or citation. (Note: Each requirement listed above must have an associated method of demonstrating compliance. If there is not already a required method in place, then a method must be proposed.)

NA

Are you in compliance with all applicable requirements for this emission unit? X Yes ___No

If no, complete the **Schedule of Compliance Form** as **ATTACHMENT F**.

ATTACHMENT E - Emission Unit Form

Emission Unit Description

Emission unit ID number:	**Emission unit name:**	**List any control devices associated with this emission unit:**
L13-F-3060	CSS-8 Product Silo	L13-M-3060

Provide a description of the emission unit (type, method of operation, design parameters, etc.):
CSS-8 Product Silo

Manufacturer:	**Model number:**	**Serial number:**
NA	NA	NA
Construction date:	**Installation date:**	**Modification date(s):**
NA	1987	NA

Design Capacity (examples: furnaces - tons/hr, tanks - gallons):
4,000 ft^3

Maximum Hourly Throughput:	**Maximum Annual Throughput:**	**Maximum Operating Schedule:**
18,000 lb/hr	78,840 tpy	8,760 hr/yr

Fuel Usage Data **(fill out all applicable fields)**

Does this emission unit combust fuel? ___Yes _X_ No	**If yes, is it?** ___ Indirect Fired ___Direct Fired
Maximum design heat input and/or maximum horsepower rating: NA	**Type and Btu/hr rating of burners:** NA

List the primary fuel type(s) and if applicable, the secondary fuel type(s). For each fuel type listed, provide the maximum hourly and annual fuel usage for each.
NA

Describe each fuel expected to be used during the term of the permit.

Fuel Type	Max. Sulfur Content	Max. Ash Content	BTU Value
NA	NA	NA	NA

Emissions Data		
Criteria Pollutants	Potential Emissions	
	PPH	TPY
Carbon Monoxide (CO)	NA	NA
Nitrogen Oxides (NO_X)	NA	NA
Lead (Pb)	NA	NA
Particulate Matter ($PM_{2.5}$)	<0.001	0.001
Particulate Matter (PM_{10})	<0.001	0.001
Total Particulate Matter (TSP)	NA	NA
Sulfur Dioxide (SO_2)	NA	NA
Volatile Organic Compounds (VOC)	NA	NA
Hazardous Air Pollutants	Potential Emissions	
	PPH	TPY
NA	NA	NA
Regulated Pollutants other than Criteria and HAP	Potential Emissions	
	PPH	TPY
NA	NA	NA

List the method(s) used to calculate the potential emissions (include dates of any stack tests conducted, versions of software used, source and dates of emission factors, etc.).

Engineering Estimate

Applicable Requirements

List all applicable requirements for this emission unit. For each applicable requirement, include the underlying rule/regulation citation and/or construction permit with the condition number. (*Note: Title V permit condition numbers alone are not the underlying applicable requirements*). If an emission limit is calculated based on the type of source and design capacity or if a standard is based on a design parameter, this information should also be included.

R13-1650K §4.1.13; 45CSR §7-3.7:

- Storage structure required to have full enclosure and equipped with PM control devices.

X Permit Shield

For all applicable requirements listed above, provide monitoring/testing/recordkeeping/reporting which shall be used to demonstrate compliance. If the method is based on a permit or rule, include the condition number or citation. (Note: Each requirement listed above must have an associated method of demonstrating compliance. If there is not already a required method in place, then a method must be proposed.)

NA

Are you in compliance with all applicable requirements for this emission unit? X Yes ___No

If no, complete the **Schedule of Compliance Form** as **ATTACHMENT F**.

ATTACHMENT E - Emission Unit Form

Emission Unit Description

Emission unit ID number:	**Emission unit name:**	**List any control devices associated with this emission unit:**
S8C-R-1060/ S8C-R-3070	CSS-8 Reactor	C2T-B-9001

Provide a description of the emission unit (type, method of operation, design parameters, etc.):
CSS-8 Reactor

Manufacturer:	**Model number:**	**Serial number:**
NA	NA	NA
Construction date:	**Installation date:**	**Modification date(s):**
NA	1991	NA

Design Capacity (examples: furnaces - tons/hr, tanks - gallons):
2,404 ft^3

Maximum Hourly Throughput:	**Maximum Annual Throughput:**	**Maximum Operating Schedule:**
18,000 lb/hr	78,840 tpy	8,760 hr/yr

Fuel Usage Data **(fill out all applicable fields)**

Does this emission unit combust fuel? ___Yes _X_ No	**If yes, is it?** ___ Indirect Fired ___Direct Fired
Maximum design heat input and/or maximum horsepower rating: NA	**Type and Btu/hr rating of burners:** NA

List the primary fuel type(s) and if applicable, the secondary fuel type(s). For each fuel type listed, provide the maximum hourly and annual fuel usage for each.
NA

Describe each fuel expected to be used during the term of the permit.

Fuel Type	Max. Sulfur Content	Max. Ash Content	BTU Value
NA	NA	NA	NA

Emissions Data		
Criteria Pollutants	Potential Emissions	
	PPH	TPY
Carbon Monoxide (CO)	See emissions from Hot Oil Heater C2T-B-9001.	
Nitrogen Oxides (NO_X)		
Lead (Pb)		
Particulate Matter ($PM_{2.5}$)		
Particulate Matter (PM_{10})		
Total Particulate Matter (TSP)		
Sulfur Dioxide (SO_2)		
Volatile Organic Compounds (VOC)		
Hazardous Air Pollutants	Potential Emissions	
	PPH	TPY
See emissions from Hot Oil Heater C2T-B-9001.		
Regulated Pollutants other than Criteria and HAP	Potential Emissions	
	PPH	TPY
NA	NA	NA

List the method(s) used to calculate the potential emissions (include dates of any stack tests conducted, versions of software used, source and dates of emission factors, etc.).

Engineering Estimate

Applicable Requirements
List all applicable requirements for this emission unit. For each applicable requirement, include the underlying rule/regulation citation and/or construction permit with the condition number. (*Note: Title V permit condition numbers alone are not the underlying applicable requirements*). If an emission limit is calculated based on the type of source and design capacity or if a standard is based on a design parameter, this information should also be included. NA
X Permit Shield
For all applicable requirements listed above, provide monitoring/testing/recordkeeping/reporting which shall be used to demonstrate compliance. If the method is based on a permit or rule, include the condition number or citation. (Note: Each requirement listed above must have an associated method of demonstrating compliance. If there is not already a required method in place, then a method must be proposed.) NA
Are you in compliance with all applicable requirements for this emission unit? X Yes ___No If no, complete the **Schedule of Compliance Form** as **ATTACHMENT F**.

ATTACHMENT E - Emission Unit Form

Emission Unit Description

Emission unit ID number:	**Emission unit name:**	**List any control devices associated with this emission unit:**
S8A-M-1610	CSS-8 Refeed Cyclone	S8A-M-1590

Provide a description of the emission unit (type, method of operation, design parameters, etc.):
CSS-8 Refeed Cyclone

Manufacturer:	**Model number:**	**Serial number:**
NA	NA	NA
Construction date:	**Installation date:**	**Modification date(s):**
NA	1991	NA

Design Capacity (examples: furnaces - tons/hr, tanks - gallons):
1,000 ft^3

Maximum Hourly Throughput:	**Maximum Annual Throughput:**	**Maximum Operating Schedule:**
2,000 lb/batch	NA	8,760 hr/yr

Fuel Usage Data **(fill out all applicable fields)**

Does this emission unit combust fuel? ___Yes _X_ No	**If yes, is it?** ___ Indirect Fired ___Direct Fired
Maximum design heat input and/or maximum horsepower rating: NA	**Type and Btu/hr rating of burners:** NA

List the primary fuel type(s) and if applicable, the secondary fuel type(s). For each fuel type listed, provide the maximum hourly and annual fuel usage for each.
NA

Describe each fuel expected to be used during the term of the permit.

Fuel Type	Max. Sulfur Content	Max. Ash Content	BTU Value
NA	NA	NA	NA

Emissions Data		
Criteria Pollutants	Potential Emissions	
	PPH	TPY
Carbon Monoxide (CO)	NA	NA
Nitrogen Oxides (NO_X)	NA	NA
Lead (Pb)	NA	NA
Particulate Matter ($PM_{2.5}$)	NA	NA
Particulate Matter (PM_{10})	0.003	0.01
Total Particulate Matter (TSP)	0.003	0.01
Sulfur Dioxide (SO_2)	NA	NA
Volatile Organic Compounds (VOC)	NA	NA
Hazardous Air Pollutants	Potential Emissions	
	PPH	TPY
NA	NA	NA
Regulated Pollutants other than Criteria and HAP	Potential Emissions	
	PPH	TPY
NA	NA	NA

List the method(s) used to calculate the potential emissions (include dates of any stack tests conducted, versions of software used, source and dates of emission factors, etc.).

Engineering Estimate

Applicable Requirements
List all applicable requirements for this emission unit. For each applicable requirement, include the underlying rule/regulation citation and/or construction permit with the condition number. (*Note: Title V permit condition numbers alone are not the underlying applicable requirements*). If an emission limit is calculated based on the type of source and design capacity or if a standard is based on a design parameter, this information should also be included. NA
X Permit Shield
For all applicable requirements listed above, provide monitoring/testing/recordkeeping/reporting which shall be used to demonstrate compliance. If the method is based on a permit or rule, include the condition number or citation. (Note: Each requirement listed above must have an associated method of demonstrating compliance. If there is not already a required method in place, then a method must be proposed.) NA
Are you in compliance with all applicable requirements for this emission unit? X Yes ___No If no, complete the **Schedule of Compliance Form** as **ATTACHMENT F**.

ATTACHMENT E - Emission Unit Form

Emission Unit Description

Emission unit ID number:	**Emission unit name:**	**List any control devices associated with this emission unit:**
L11-F-1010	CSS-8 Salvage Silo	L11-M-1010

Provide a description of the emission unit (type, method of operation, design parameters, etc.):
CSS-8 Salvage Silo

Manufacturer:	**Model number:**	**Serial number:**
NA	NA	NA
Construction date:	**Installation date:**	**Modification date(s):**
NA	1977	NA

Design Capacity (examples: furnaces - tons/hr, tanks - gallons):
4,000 ft^3

Maximum Hourly Throughput:	**Maximum Annual Throughput:**	**Maximum Operating Schedule:**
48,000 lb/hr	NA	8,760 hr/yr

Fuel Usage Data **(fill out all applicable fields)**

Does this emission unit combust fuel? ___Yes _X_ No	**If yes, is it?** ___ Indirect Fired ___Direct Fired
Maximum design heat input and/or maximum horsepower rating: NA	**Type and Btu/hr rating of burners:** NA

List the primary fuel type(s) and if applicable, the secondary fuel type(s). For each fuel type listed, provide the maximum hourly and annual fuel usage for each.
NA

Describe each fuel expected to be used during the term of the permit.

Fuel Type	Max. Sulfur Content	Max. Ash Content	BTU Value
NA	NA	NA	NA

Emissions Data		
Criteria Pollutants	Potential Emissions	
	PPH	TPY
Carbon Monoxide (CO)	NA	NA
Nitrogen Oxides (NO_X)	NA	NA
Lead (Pb)	NA	NA
Particulate Matter ($PM_{2.5}$)	0.01	0.06
Particulate Matter (PM_{10})	0.01	0.06
Total Particulate Matter (TSP)	NA	NA
Sulfur Dioxide (SO_2)	NA	NA
Volatile Organic Compounds (VOC)	NA	NA
Hazardous Air Pollutants	Potential Emissions	
	PPH	TPY
NA	NA	NA
Regulated Pollutants other than Criteria and HAP	Potential Emissions	
	PPH	TPY
NA	NA	NA

List the method(s) used to calculate the potential emissions (include dates of any stack tests conducted, versions of software used, source and dates of emission factors, etc.).

Engineering Estimate

Applicable Requirements

List all applicable requirements for this emission unit. For each applicable requirement, include the underlying rule/regulation citation and/or construction permit with the condition number. (*Note: Title V permit condition numbers alone are not the underlying applicable requirements*). If an emission limit is calculated based on the type of source and design capacity or if a standard is based on a design parameter, this information should also be included.

R13-1650K §4.1.13; 45CSR §7-3.7:

- Storage structure required to have full enclosure and equipped with PM control devices.

X Permit Shield

For all applicable requirements listed above, provide monitoring/testing/recordkeeping/reporting which shall be used to demonstrate compliance. If the method is based on a permit or rule, include the condition number or citation. (Note: Each requirement listed above must have an associated method of demonstrating compliance. If there is not already a required method in place, then a method must be proposed.)

NA

Are you in compliance with all applicable requirements for this emission unit? X Yes ___No

If no, complete the **Schedule of Compliance Form** as **ATTACHMENT F**.

ATTACHMENT E - Emission Unit Form

Emission Unit Description

Emission unit ID number:	**Emission unit name:**	**List any control devices associated with this emission unit:**
L11-F-1020	CSS-8 Salvage Silo	L11-M-1020

Provide a description of the emission unit (type, method of operation, design parameters, etc.):
CSS-8 Salvage Silo

Manufacturer:	**Model number:**	**Serial number:**
NA	NA	NA
Construction date:	**Installation date:**	**Modification date(s):**
NA	1977	NA

Design Capacity (examples: furnaces - tons/hr, tanks - gallons):
4,000 ft^3

Maximum Hourly Throughput:	**Maximum Annual Throughput:**	**Maximum Operating Schedule:**
48,000 lb/hr	NA	8,760 hr/yr

Fuel Usage Data **(fill out all applicable fields)**

Does this emission unit combust fuel? ___Yes _X_ No	**If yes, is it?** ___ Indirect Fired ___Direct Fired
Maximum design heat input and/or maximum horsepower rating: NA	**Type and Btu/hr rating of burners:** NA

List the primary fuel type(s) and if applicable, the secondary fuel type(s). For each fuel type listed, provide the maximum hourly and annual fuel usage for each.
NA

Describe each fuel expected to be used during the term of the permit.

Fuel Type	Max. Sulfur Content	Max. Ash Content	BTU Value
NA	NA	NA	NA

Emissions Data		
Criteria Pollutants	Potential Emissions	
	PPH	TPY
Carbon Monoxide (CO)	NA	NA
Nitrogen Oxides (NO_X)	NA	NA
Lead (Pb)	NA	NA
Particulate Matter ($PM_{2.5}$)	0.01	0.06
Particulate Matter (PM_{10})	0.01	0.06
Total Particulate Matter (TSP)	NA	NA
Sulfur Dioxide (SO_2)	NA	NA
Volatile Organic Compounds (VOC)	NA	NA
Hazardous Air Pollutants	Potential Emissions	
	PPH	TPY
NA	NA	NA
Regulated Pollutants other than Criteria and HAP	Potential Emissions	
	PPH	TPY
NA	NA	NA

List the method(s) used to calculate the potential emissions (include dates of any stack tests conducted, versions of software used, source and dates of emission factors, etc.).

Engineering Estimate

Applicable Requirements

List all applicable requirements for this emission unit. For each applicable requirement, include the underlying rule/regulation citation and/or construction permit with the condition number. (*Note: Title V permit condition numbers alone are not the underlying applicable requirements*). If an emission limit is calculated based on the type of source and design capacity or if a standard is based on a design parameter, this information should also be included.

R13-1650K §4.1.13; 45CSR §7-3.7:

- Storage structure required to have full enclosure and equipped with PM control devices.

X Permit Shield

For all applicable requirements listed above, provide monitoring/testing/recordkeeping/reporting which shall be used to demonstrate compliance. If the method is based on a permit or rule, include the condition number or citation. (Note: Each requirement listed above must have an associated method of demonstrating compliance. If there is not already a required method in place, then a method must be proposed.)

NA

Are you in compliance with all applicable requirements for this emission unit? X Yes ___No

If no, complete the **Schedule of Compliance Form** as **ATTACHMENT F**.

ATTACHMENT E - Emission Unit Form

Emission Unit Description

Emission unit ID number:	**Emission unit name:**	**List any control devices associated with this emission unit:**
L37-P-7130	CSS-8 Storage Air Classifier	NA

Provide a description of the emission unit (type, method of operation, design parameters, etc.):
CSS-8 Storage Air Classifier

Manufacturer:	**Model number:**	**Serial number:**
NA	NA	NA
Construction date:	**Installation date:**	**Modification date(s):**
NA	1991	NA

Design Capacity (examples: furnaces - tons/hr, tanks - gallons):
55 lb/ft^3

Maximum Hourly Throughput:	**Maximum Annual Throughput:**	**Maximum Operating Schedule:**
25,000 lb/hr	NA	8,760 hr/yr

Fuel Usage Data **(fill out all applicable fields)**

Does this emission unit combust fuel? ___Yes X No	**If yes, is it?** ___ Indirect Fired ___Direct Fired
Maximum design heat input and/or maximum horsepower rating: NA	**Type and Btu/hr rating of burners:** NA

List the primary fuel type(s) and if applicable, the secondary fuel type(s). For each fuel type listed, provide the maximum hourly and annual fuel usage for each.
NA

Describe each fuel expected to be used during the term of the permit.

Fuel Type	Max. Sulfur Content	Max. Ash Content	BTU Value
NA	NA	NA	NA

Emissions Data		
Criteria Pollutants	Potential Emissions	
	PPH	TPY
Carbon Monoxide (CO)	NA	NA
Nitrogen Oxides (NO_X)	NA	NA
Lead (Pb)	NA	NA
Particulate Matter ($PM_{2.5}$)	NA	NA
Particulate Matter (PM_{10})	NA	NA
Total Particulate Matter (TSP)	NA	NA
Sulfur Dioxide (SO_2)	NA	NA
Volatile Organic Compounds (VOC)	NA	NA
Hazardous Air Pollutants	Potential Emissions	
	PPH	TPY
NA	NA	NA
Regulated Pollutants other than Criteria and HAP	Potential Emissions	
	PPH	TPY
NA	NA	NA

List the method(s) used to calculate the potential emissions (include dates of any stack tests conducted, versions of software used, source and dates of emission factors, etc.).

Close vent system with no emission point.

Applicable Requirements
List all applicable requirements for this emission unit. For each applicable requirement, include the underlying rule/regulation citation and/or construction permit with the condition number. (*Note: Title V permit condition numbers alone are not the underlying applicable requirements*). If an emission limit is calculated based on the type of source and design capacity or if a standard is based on a design parameter, this information should also be included. NA
X Permit Shield
For all applicable requirements listed above, provide monitoring/testing/recordkeeping/reporting which shall be used to demonstrate compliance. If the method is based on a permit or rule, include the condition number or citation. (Note: Each requirement listed above must have an associated method of demonstrating compliance. If there is not already a required method in place, then a method must be proposed.) NA
Are you in compliance with all applicable requirements for this emission unit? X Yes ___No If no, complete the **Schedule of Compliance Form** as **ATTACHMENT F**.

ATTACHMENT E - Emission Unit Form

Emission Unit Description

Emission unit ID number:	**Emission unit name:**	**List any control devices associated with this emission unit:**
C2T-F-2670	CSS-8 T-66 Lites Tank	C2T-B-9001

Provide a description of the emission unit (type, method of operation, design parameters, etc.):
CSS-8 T-66 Lites Tank

Manufacturer:	**Model number:**	**Serial number:**
NA	NA	NA
Construction date:	**Installation date:**	**Modification date(s):**
NA	1994	NA

Design Capacity (examples: furnaces - tons/hr, tanks - gallons):
6,400 gallons

Maximum Hourly Throughput:	**Maximum Annual Throughput:**	**Maximum Operating Schedule:**
NA	NA	8,760 hr/yr

Fuel Usage Data **(fill out all applicable fields)**

Does this emission unit combust fuel? ___Yes _X_ No	**If yes, is it?** ___ Indirect Fired ___Direct Fired
Maximum design heat input and/or maximum horsepower rating: NA	**Type and Btu/hr rating of burners:** NA

List the primary fuel type(s) and if applicable, the secondary fuel type(s). For each fuel type listed, provide the maximum hourly and annual fuel usage for each.
NA

Describe each fuel expected to be used during the term of the permit.

Fuel Type	Max. Sulfur Content	Max. Ash Content	BTU Value
NA	NA	NA	NA

Emissions Data		
Criteria Pollutants	Potential Emissions	
	PPH	TPY
Carbon Monoxide (CO)	See emissions from Hot Oil Heater C2T-B-9001.	
Nitrogen Oxides (NO_X)		
Lead (Pb)		
Particulate Matter ($PM_{2.5}$)		
Particulate Matter (PM_{10})		
Total Particulate Matter (TSP)		
Sulfur Dioxide (SO_2)		
Volatile Organic Compounds (VOC)		
Hazardous Air Pollutants	Potential Emissions	
	PPH	TPY
See emissions from Hot Oil Heater C2T-B-9001.		
Regulated Pollutants other than Criteria and HAP	Potential Emissions	
	PPH	TPY
NA	NA	NA

List the method(s) used to calculate the potential emissions (include dates of any stack tests conducted, versions of software used, source and dates of emission factors, etc.).

Engineering Estimate

Applicable Requirements
List all applicable requirements for this emission unit. For each applicable requirement, include the underlying rule/regulation citation and/or construction permit with the condition number. (*Note: Title V permit condition numbers alone are not the underlying applicable requirements*). If an emission limit is calculated based on the type of source and design capacity or if a standard is based on a design parameter, this information should also be included. NA
X Permit Shield
For all applicable requirements listed above, provide monitoring/testing/recordkeeping/reporting which shall be used to demonstrate compliance. If the method is based on a permit or rule, include the condition number or citation. (Note: Each requirement listed above must have an associated method of demonstrating compliance. If there is not already a required method in place, then a method must be proposed.) NA
Are you in compliance with all applicable requirements for this emission unit? X Yes ___No If no, complete the **Schedule of Compliance Form** as **ATTACHMENT F**.

ATTACHMENT E - Emission Unit Form

Emission Unit Description

Emission unit ID number:	**Emission unit name:**	**List any control devices associated with this emission unit:**
F-5001	CSS-8 T-66 Tank	C2T-B-9001

Provide a description of the emission unit (type, method of operation, design parameters, etc.):
CSS-8 T-66 Tank

Manufacturer:	**Model number:**	**Serial number:**
NA	NA	NA
Construction date:	**Installation date:**	**Modification date(s):**
NA	1976	NA

Design Capacity (examples: furnaces - tons/hr, tanks - gallons):
NA

Maximum Hourly Throughput:	**Maximum Annual Throughput:**	**Maximum Operating Schedule:**
NA	10,000 gal/yr	8,760 hr/yr

Fuel Usage Data **(fill out all applicable fields)**

Does this emission unit combust fuel? ___Yes _X_ No	**If yes, is it?** ___ Indirect Fired ___Direct Fired
Maximum design heat input and/or maximum horsepower rating: NA	**Type and Btu/hr rating of burners:** NA

List the primary fuel type(s) and if applicable, the secondary fuel type(s). For each fuel type listed, provide the maximum hourly and annual fuel usage for each.
NA

Describe each fuel expected to be used during the term of the permit.

Fuel Type	Max. Sulfur Content	Max. Ash Content	BTU Value
NA	NA	NA	NA

Emissions Data		
Criteria Pollutants	Potential Emissions	
	PPH	TPY
Carbon Monoxide (CO)	See emissions from Hot Oil Heater C2T-B-9001.	
Nitrogen Oxides (NO_X)		
Lead (Pb)		
Particulate Matter ($PM_{2.5}$)		
Particulate Matter (PM_{10})		
Total Particulate Matter (TSP)		
Sulfur Dioxide (SO_2)		
Volatile Organic Compounds (VOC)		
Hazardous Air Pollutants	Potential Emissions	
	PPH	TPY
See emissions from Hot Oil Heater C2T-B-9001.		
Regulated Pollutants other than Criteria and HAP	Potential Emissions	
	PPH	TPY
NA	NA	NA

List the method(s) used to calculate the potential emissions (include dates of any stack tests conducted, versions of software used, source and dates of emission factors, etc.).

Engineering Estimate

Applicable Requirements
List all applicable requirements for this emission unit. For each applicable requirement, include the underlying rule/regulation citation and/or construction permit with the condition number. (*Note: Title V permit condition numbers alone are not the underlying applicable requirements*). If an emission limit is calculated based on the type of source and design capacity or if a standard is based on a design parameter, this information should also be included. NA
X Permit Shield
For all applicable requirements listed above, provide monitoring/testing/recordkeeping/reporting which shall be used to demonstrate compliance. If the method is based on a permit or rule, include the condition number or citation. (Note: Each requirement listed above must have an associated method of demonstrating compliance. If there is not already a required method in place, then a method must be proposed.) NA
Are you in compliance with all applicable requirements for this emission unit? X Yes ___No If no, complete the **Schedule of Compliance Form** as **ATTACHMENT F**.

CSS-9

ATTACHMENT E - Emission Unit Form

Emission Unit Description

Emission unit ID number:	**Emission unit name:**	**List any control devices associated with this emission unit:**
L15-U-1030	CSS-9 Elutriator	NA

Provide a description of the emission unit (type, method of operation, design parameters, etc.):
CSS-9 Elutriator

Manufacturer:	**Model number:**	**Serial number:**
NA	NA	NA
Construction date:	**Installation date:**	**Modification date(s):**
NA	1991	NA

Design Capacity (examples: furnaces - tons/hr, tanks - gallons):
150 ft^2

Maximum Hourly Throughput:	**Maximum Annual Throughput:**	**Maximum Operating Schedule:**
42,000 lb/hr	183,960 tpy	8,760 hr/yr

Fuel Usage Data **(fill out all applicable fields)**

Does this emission unit combust fuel? ___ Yes X No	**If yes, is it?** ___ Indirect Fired ___Direct Fired
Maximum design heat input and/or maximum horsepower rating: NA	**Type and Btu/hr rating of burners:** NA

List the primary fuel type(s) and if applicable, the secondary fuel type(s). For each fuel type listed, provide the maximum hourly and annual fuel usage for each.
NA

Describe each fuel expected to be used during the term of the permit.

Fuel Type	Max. Sulfur Content	Max. Ash Content	BTU Value
NA	NA	NA	NA

Emissions Data		
Criteria Pollutants	Potential Emissions	
	PPH	TPY
Carbon Monoxide (CO)	NA	NA
Nitrogen Oxides (NO_X)	NA	NA
Lead (Pb)	NA	NA
Particulate Matter ($PM_{2.5}$)	NA	NA
Particulate Matter (PM_{10})	<0.001	0.04
Total Particulate Matter (TSP)	<0.001	0.04
Sulfur Dioxide (SO_2)	NA	NA
Volatile Organic Compounds (VOC)	NA	NA
Hazardous Air Pollutants	Potential Emissions	
	PPH	TPY
NA	NA	NA
Regulated Pollutants other than Criteria and HAP	Potential Emissions	
	PPH	TPY
NA	NA	NA

List the method(s) used to calculate the potential emissions (include dates of any stack tests conducted, versions of software used, source and dates of emission factors, etc.).

Engineering Estimate

Applicable Requirements
List all applicable requirements for this emission unit. For each applicable requirement, include the underlying rule/regulation citation and/or construction permit with the condition number. (*Note: Title V permit condition numbers alone are not the underlying applicable requirements*). If an emission limit is calculated based on the type of source and design capacity or if a standard is based on a design parameter, this information should also be included. NA
X Permit Shield
For all applicable requirements listed above, provide monitoring/testing/recordkeeping/reporting which shall be used to demonstrate compliance. If the method is based on a permit or rule, include the condition number or citation. (Note: Each requirement listed above must have an associated method of demonstrating compliance. If there is not already a required method in place, then a method must be proposed.) NA
Are you in compliance with all applicable requirements for this emission unit? X Yes ___No If no, complete the **Schedule of Compliance Form** as **ATTACHMENT F**.

ATTACHMENT E - Emission Unit Form

Emission Unit Description

Emission unit ID number:	**Emission unit name:**	**List any control devices associated with this emission unit:**
L15-F-1701B	CSS-9 Verification Bin	L15-M-1701B

Provide a description of the emission unit (type, method of operation, design parameters, etc.):
CSS-9 Verification Bin

Manufacturer:	**Model number:**	**Serial number:**
NA	NA	NA
Construction date:	**Installation date:**	**Modification date(s):**
NA	1988	NA

Design Capacity (examples: furnaces - tons/hr, tanks - gallons):
920 ft^3

Maximum Hourly Throughput:	**Maximum Annual Throughput:**	**Maximum Operating Schedule:**
42,000 lb/hr	183,960 tpy	8,760 hr/yr

Fuel Usage Data **(fill out all applicable fields)**

Does this emission unit combust fuel? ___ Yes X No	**If yes, is it?** ___ Indirect Fired ___Direct Fired
Maximum design heat input and/or maximum horsepower rating: NA	**Type and Btu/hr rating of burners:** NA

List the primary fuel type(s) and if applicable, the secondary fuel type(s). For each fuel type listed, provide the maximum hourly and annual fuel usage for each.
NA

Describe each fuel expected to be used during the term of the permit.

Fuel Type	Max. Sulfur Content	Max. Ash Content	BTU Value
NA	NA	NA	NA

Emissions Data		
Criteria Pollutants	Potential Emissions	
	PPH	TPY
Carbon Monoxide (CO)	NA	NA
Nitrogen Oxides (NO_X)	NA	NA
Lead (Pb)	NA	NA
Particulate Matter ($PM_{2.5}$)	NA	NA
Particulate Matter (PM_{10})	<0.001	0.003
Total Particulate Matter (TSP)	<0.001	0.003
Sulfur Dioxide (SO_2)	NA	NA
Volatile Organic Compounds (VOC)	NA	NA
Hazardous Air Pollutants	Potential Emissions	
	PPH	TPY
NA	NA	NA
Regulated Pollutants other than Criteria and HAP	Potential Emissions	
	PPH	TPY
NA	NA	NA

List the method(s) used to calculate the potential emissions (include dates of any stack tests conducted, versions of software used, source and dates of emission factors, etc.).

Engineering Estimate

Applicable Requirements
List all applicable requirements for this emission unit. For each applicable requirement, include the underlying rule/regulation citation and/or construction permit with the condition number. (*Note: Title V permit condition numbers alone are not the underlying applicable requirements*). If an emission limit is calculated based on the type of source and design capacity or if a standard is based on a design parameter, this information should also be included. NA
X Permit Shield
For all applicable requirements listed above, provide monitoring/testing/recordkeeping/reporting which shall be used to demonstrate compliance. If the method is based on a permit or rule, include the condition number or citation. (Note: Each requirement listed above must have an associated method of demonstrating compliance. If there is not already a required method in place, then a method must be proposed.) NA
Are you in compliance with all applicable requirements for this emission unit? X Yes ___No If no, complete the **Schedule of Compliance Form** as **ATTACHMENT F**.

ATTACHMENT E - Emission Unit Form

Emission Unit Description

Emission unit ID number:	**Emission unit name:**	**List any control devices associated with this emission unit:**
L15-U-5090	CSS-9 Elutriator	L15-M-5090

Provide a description of the emission unit (type, method of operation, design parameters, etc.):
CSS-9 Elutriator

Manufacturer:	**Model number:**	**Serial number:**
NA	NA	NA
Construction date:	**Installation date:**	**Modification date(s):**
NA	1991	NA

Design Capacity (examples: furnaces - tons/hr, tanks - gallons):
150 ft^2

Maximum Hourly Throughput:	**Maximum Annual Throughput:**	**Maximum Operating Schedule:**
42,000 lb/hr	183,960 tpy	8,760 hr/yr

Fuel Usage Data **(fill out all applicable fields)**

Does this emission unit combust fuel? ___ Yes X No	**If yes, is it?** ___ Indirect Fired ___Direct Fired
Maximum design heat input and/or maximum horsepower rating: NA	**Type and Btu/hr rating of burners:** NA

List the primary fuel type(s) and if applicable, the secondary fuel type(s). For each fuel type listed, provide the maximum hourly and annual fuel usage for each.
NA

Describe each fuel expected to be used during the term of the permit.

Fuel Type	Max. Sulfur Content	Max. Ash Content	BTU Value
NA	NA	NA	NA

Emissions Data		
Criteria Pollutants	Potential Emissions	
	PPH	TPY
Carbon Monoxide (CO)	NA	NA
Nitrogen Oxides (NO_X)	NA	NA
Lead (Pb)	NA	NA
Particulate Matter ($PM_{2.5}$)	NA	NA
Particulate Matter (PM_{10})	0.002	0.01
Total Particulate Matter (TSP)	0.002	0.01
Sulfur Dioxide (SO_2)	NA	NA
Volatile Organic Compounds (VOC)	NA	NA
Hazardous Air Pollutants	Potential Emissions	
	PPH	TPY
NA	NA	NA
Regulated Pollutants other than Criteria and HAP	Potential Emissions	
	PPH	TPY
NA	NA	NA

List the method(s) used to calculate the potential emissions (include dates of any stack tests conducted, versions of software used, source and dates of emission factors, etc.).

Engineering Estimate

Applicable Requirements
List all applicable requirements for this emission unit. For each applicable requirement, include the underlying rule/regulation citation and/or construction permit with the condition number. (*Note: Title V permit condition numbers alone are not the underlying applicable requirements*). If an emission limit is calculated based on the type of source and design capacity or if a standard is based on a design parameter, this information should also be included. NA
X Permit Shield
For all applicable requirements listed above, provide monitoring/testing/recordkeeping/reporting which shall be used to demonstrate compliance. If the method is based on a permit or rule, include the condition number or citation. (Note: Each requirement listed above must have an associated method of demonstrating compliance. If there is not already a required method in place, then a method must be proposed.) NA
Are you in compliance with all applicable requirements for this emission unit? X Yes ___No If no, complete the **Schedule of Compliance Form** as **ATTACHMENT F**.

ATTACHMENT E - Emission Unit Form

Emission Unit Description

Emission unit ID number:	**Emission unit name:**	**List any control devices associated with this emission unit:**
L15-U-6110	CSS-9 Elutriator	NA

Provide a description of the emission unit (type, method of operation, design parameters, etc.):
CSS-9 Elutriator

Manufacturer:	**Model number:**	**Serial number:**
NA	NA	NA
Construction date:	**Installation date:**	**Modification date(s):**
NA	1991	NA

Design Capacity (examples: furnaces - tons/hr, tanks - gallons):
150 ft^2

Maximum Hourly Throughput:	**Maximum Annual Throughput:**	**Maximum Operating Schedule:**
42,000 lb/hr	183,960 tpy	8,760 hr/yr

Fuel Usage Data **(fill out all applicable fields)**

Does this emission unit combust fuel? ___ Yes X No	**If yes, is it?** ___ Indirect Fired ___Direct Fired
Maximum design heat input and/or maximum horsepower rating: NA	**Type and Btu/hr rating of burners:** NA

List the primary fuel type(s) and if applicable, the secondary fuel type(s). For each fuel type listed, provide the maximum hourly and annual fuel usage for each.
NA

Describe each fuel expected to be used during the term of the permit.

Fuel Type	Max. Sulfur Content	Max. Ash Content	BTU Value
NA	NA	NA	NA

Emissions Data		
Criteria Pollutants	Potential Emissions	
	PPH	TPY
Carbon Monoxide (CO)	NA	NA
Nitrogen Oxides (NO_X)	NA	NA
Lead (Pb)	NA	NA
Particulate Matter ($PM_{2.5}$)	NA	NA
Particulate Matter (PM_{10})	0.002	0.01
Total Particulate Matter (TSP)	0.002	0.01
Sulfur Dioxide (SO_2)	NA	NA
Volatile Organic Compounds (VOC)	NA	NA
Hazardous Air Pollutants	Potential Emissions	
	PPH	TPY
NA	NA	NA
Regulated Pollutants other than Criteria and HAP	Potential Emissions	
	PPH	TPY
NA	NA	NA

List the method(s) used to calculate the potential emissions (include dates of any stack tests conducted, versions of software used, source and dates of emission factors, etc.).

Engineering Estimate

Applicable Requirements
List all applicable requirements for this emission unit. For each applicable requirement, include the underlying rule/regulation citation and/or construction permit with the condition number. (*Note: Title V permit condition numbers alone are not the underlying applicable requirements*). If an emission limit is calculated based on the type of source and design capacity or if a standard is based on a design parameter, this information should also be included. NA
X Permit Shield
For all applicable requirements listed above, provide monitoring/testing/recordkeeping/reporting which shall be used to demonstrate compliance. If the method is based on a permit or rule, include the condition number or citation. (Note: Each requirement listed above must have an associated method of demonstrating compliance. If there is not already a required method in place, then a method must be proposed.) NA
Are you in compliance with all applicable requirements for this emission unit? X Yes ___No If no, complete the **Schedule of Compliance Form** as **ATTACHMENT F**.

ATTACHMENT E - Emission Unit Form

Emission Unit Description

Emission unit ID number:	**Emission unit name:**	**List any control devices associated with this emission unit:**
L17-U-7240	CSS-9 Elutriator	NA

Provide a description of the emission unit (type, method of operation, design parameters, etc.):
CSS-9 Elutriator

Manufacturer:	**Model number:**	**Serial number:**
NA	NA	NA
Construction date:	**Installation date:**	**Modification date(s):**
NA	1991	NA

Design Capacity (examples: furnaces - tons/hr, tanks - gallons):
700 acfm

Maximum Hourly Throughput:	**Maximum Annual Throughput:**	**Maximum Operating Schedule:**
42,000 lb/hr	183,960 tpy	8,760 hr/yr

Fuel Usage Data **(fill out all applicable fields)**

Does this emission unit combust fuel? ___ Yes X No	**If yes, is it?** ___ Indirect Fired ___Direct Fired
Maximum design heat input and/or maximum horsepower rating: NA	**Type and Btu/hr rating of burners:** NA

List the primary fuel type(s) and if applicable, the secondary fuel type(s). For each fuel type listed, provide the maximum hourly and annual fuel usage for each.
NA

Describe each fuel expected to be used during the term of the permit.

Fuel Type	Max. Sulfur Content	Max. Ash Content	BTU Value
NA	NA	NA	NA

Emissions Data		
Criteria Pollutants	Potential Emissions	
	PPH	TPY
Carbon Monoxide (CO)	NA	NA
Nitrogen Oxides (NO_X)	NA	NA
Lead (Pb)	NA	NA
Particulate Matter ($PM_{2.5}$)	NA	NA
Particulate Matter (PM_{10})	0.005	0.02
Total Particulate Matter (TSP)	0.005	0.02
Sulfur Dioxide (SO_2)	NA	NA
Volatile Organic Compounds (VOC)	NA	NA
Hazardous Air Pollutants	Potential Emissions	
	PPH	TPY
NA	NA	NA
Regulated Pollutants other than Criteria and HAP	Potential Emissions	
	PPH	TPY
NA	NA	NA

List the method(s) used to calculate the potential emissions (include dates of any stack tests conducted, versions of software used, source and dates of emission factors, etc.).

Engineering Estimate

Applicable Requirements
List all applicable requirements for this emission unit. For each applicable requirement, include the underlying rule/regulation citation and/or construction permit with the condition number. (*Note: Title V permit condition numbers alone are not the underlying applicable requirements*). If an emission limit is calculated based on the type of source and design capacity or if a standard is based on a design parameter, this information should also be included. NA
X Permit Shield
For all applicable requirements listed above, provide monitoring/testing/recordkeeping/reporting which shall be used to demonstrate compliance. If the method is based on a permit or rule, include the condition number or citation. (Note: Each requirement listed above must have an associated method of demonstrating compliance. If there is not already a required method in place, then a method must be proposed.) NA
Are you in compliance with all applicable requirements for this emission unit? X Yes ___No If no, complete the **Schedule of Compliance Form** as **ATTACHMENT F**.

ATTACHMENT E - Emission Unit Form

Emission Unit Description

Emission unit ID number:	**Emission unit name:**	**List any control devices associated with this emission unit:**
L15-F-2701A	CSS-9 Product Silo	L15-M-2701A

Provide a description of the emission unit (type, method of operation, design parameters, etc.):
CSS-9 Product Silo

Manufacturer:	**Model number:**	**Serial number:**
NA	NA	NA
Construction date:	**Installation date:**	**Modification date(s):**
NA	1988	NA

Design Capacity (examples: furnaces - tons/hr, tanks - gallons):
4,000 ft^3

Maximum Hourly Throughput:	**Maximum Annual Throughput:**	**Maximum Operating Schedule:**
42,000 lb/hr	183,960 tpy	8,760 hr/yr

Fuel Usage Data **(fill out all applicable fields)**

Does this emission unit combust fuel? ___ Yes X No	**If yes, is it?** ___ Indirect Fired ___Direct Fired
Maximum design heat input and/or maximum horsepower rating: NA	**Type and Btu/hr rating of burners:** NA

List the primary fuel type(s) and if applicable, the secondary fuel type(s). For each fuel type listed, provide the maximum hourly and annual fuel usage for each.
NA

Describe each fuel expected to be used during the term of the permit.

Fuel Type	Max. Sulfur Content	Max. Ash Content	BTU Value
NA	NA	NA	NA

Emissions Data		
Criteria Pollutants	Potential Emissions	
	PPH	TPY
Carbon Monoxide (CO)	NA	NA
Nitrogen Oxides (NO_X)	NA	NA
Lead (Pb)	NA	NA
Particulate Matter ($PM_{2.5}$)	NA	NA
Particulate Matter (PM_{10})	<0.001	0.003
Total Particulate Matter (TSP)	<0.001	0.003
Sulfur Dioxide (SO_2)	NA	NA
Volatile Organic Compounds (VOC)	NA	NA
Hazardous Air Pollutants	Potential Emissions	
	PPH	TPY
NA	NA	NA
Regulated Pollutants other than Criteria and HAP	Potential Emissions	
	PPH	TPY
NA	NA	NA

List the method(s) used to calculate the potential emissions (include dates of any stack tests conducted, versions of software used, source and dates of emission factors, etc.).

Engineering Estimate

Applicable Requirements

List all applicable requirements for this emission unit. For each applicable requirement, include the underlying rule/regulation citation and/or construction permit with the condition number. (*Note: Title V permit condition numbers alone are not the underlying applicable requirements*). If an emission limit is calculated based on the type of source and design capacity or if a standard is based on a design parameter, this information should also be included.

R13-1650K §4.1.13; 45CSR §7-3.7:

- Storage structure required to have full enclosure and equipped with PM control devices.

X Permit Shield

For all applicable requirements listed above, provide monitoring/testing/recordkeeping/reporting which shall be used to demonstrate compliance. If the method is based on a permit or rule, include the condition number or citation. (Note: Each requirement listed above must have an associated method of demonstrating compliance. If there is not already a required method in place, then a method must be proposed.)

NA

Are you in compliance with all applicable requirements for this emission unit? X Yes ___No

If no, complete the **Schedule of Compliance Form** as **ATTACHMENT F**.

ATTACHMENT E - Emission Unit Form

Emission Unit Description

Emission unit ID number:	**Emission unit name:**	**List any control devices associated with this emission unit:**
L15-F-2701B	CSS-9 Product Silo	L15-M-2701B

Provide a description of the emission unit (type, method of operation, design parameters, etc.):
CSS-9 Product Silo

Manufacturer:	**Model number:**	**Serial number:**
NA	NA	NA
Construction date:	**Installation date:**	**Modification date(s):**
NA	1988	NA

Design Capacity (examples: furnaces - tons/hr, tanks - gallons):
4,000 ft^3

Maximum Hourly Throughput:	**Maximum Annual Throughput:**	**Maximum Operating Schedule:**
42,000 lb/hr	183,960 tpy	8,760 hr/yr

Fuel Usage Data **(fill out all applicable fields)**

Does this emission unit combust fuel? ___ Yes X No	**If yes, is it?** ___ Indirect Fired ___Direct Fired
Maximum design heat input and/or maximum horsepower rating: NA	**Type and Btu/hr rating of burners:** NA

List the primary fuel type(s) and if applicable, the secondary fuel type(s). For each fuel type listed, provide the maximum hourly and annual fuel usage for each.
NA

Describe each fuel expected to be used during the term of the permit.

Fuel Type	Max. Sulfur Content	Max. Ash Content	BTU Value
NA	NA	NA	NA

Emissions Data		
Criteria Pollutants	Potential Emissions	
	PPH	TPY
Carbon Monoxide (CO)	NA	NA
Nitrogen Oxides (NO_X)	NA	NA
Lead (Pb)	NA	NA
Particulate Matter ($PM_{2.5}$)	NA	NA
Particulate Matter (PM_{10})	<0.001	0.003
Total Particulate Matter (TSP)	<0.001	0.003
Sulfur Dioxide (SO_2)	NA	NA
Volatile Organic Compounds (VOC)	NA	NA
Hazardous Air Pollutants	Potential Emissions	
	PPH	TPY
NA	NA	NA
Regulated Pollutants other than Criteria and HAP	Potential Emissions	
	PPH	TPY
NA	NA	NA

List the method(s) used to calculate the potential emissions (include dates of any stack tests conducted, versions of software used, source and dates of emission factors, etc.).

Engineering Estimate

Applicable Requirements
List all applicable requirements for this emission unit. For each applicable requirement, include the underlying rule/regulation citation and/or <u>construction permit</u> with the condition number. (*Note: Title V permit condition numbers alone are not the underlying applicable requirements*). If an emission limit is calculated based on the type of source and design capacity or if a standard is based on a design parameter, this information should also be included. **R13-1650K §4.1.13; 45CSR §7-3.7:** • Storage structure required to have full enclosure and equipped with PM control devices.
<u>X</u> Permit Shield
For all applicable requirements listed above, provide monitoring/testing/recordkeeping/reporting which shall be used to demonstrate compliance. If the method is based on a permit or rule, include the condition number or citation. (Note: Each requirement listed above must have an associated method of demonstrating compliance. If there is not already a required method in place, then a method must be proposed.) NA
Are you in compliance with all applicable requirements for this emission unit? <u>X</u> Yes ___No If no, complete the **Schedule of Compliance Form** as **ATTACHMENT F**.

ATTACHMENT E - Emission Unit Form

Emission Unit Description

Emission unit ID number:	**Emission unit name:**	**List any control devices associated with this emission unit:**
L17-F-7130	CSS-9 Product Silo	L15-M-7130

Provide a description of the emission unit (type, method of operation, design parameters, etc.):
CSS-9 Product Silo

Manufacturer:	**Model number:**	**Serial number:**
NA	NA	NA
Construction date:	**Installation date:**	**Modification date(s):**
NA	1991	NA

Design Capacity (examples: furnaces - tons/hr, tanks - gallons):
4,000 ft^3

Maximum Hourly Throughput:	**Maximum Annual Throughput:**	**Maximum Operating Schedule:**
42,000 lb/hr	183,960 tpy	8,760 hr/yr

Fuel Usage Data **(fill out all applicable fields)**

Does this emission unit combust fuel? ___ Yes X No	**If yes, is it?** ___ Indirect Fired ___Direct Fired
Maximum design heat input and/or maximum horsepower rating: NA	**Type and Btu/hr rating of burners:** NA

List the primary fuel type(s) and if applicable, the secondary fuel type(s). For each fuel type listed, provide the maximum hourly and annual fuel usage for each.
NA

Describe each fuel expected to be used during the term of the permit.

Fuel Type	Max. Sulfur Content	Max. Ash Content	BTU Value
NA	NA	NA	NA

Emissions Data		
Criteria Pollutants	Potential Emissions	
	PPH	TPY
Carbon Monoxide (CO)	NA	NA
Nitrogen Oxides (NO_X)	NA	NA
Lead (Pb)	NA	NA
Particulate Matter ($PM_{2.5}$)	NA	NA
Particulate Matter (PM_{10})	<0.001	0.03
Total Particulate Matter (TSP)	<0.001	0.03
Sulfur Dioxide (SO_2)	NA	NA
Volatile Organic Compounds (VOC)	NA	NA
Hazardous Air Pollutants	Potential Emissions	
	PPH	TPY
NA	NA	NA
Regulated Pollutants other than Criteria and HAP	Potential Emissions	
	PPH	TPY
NA	NA	NA

List the method(s) used to calculate the potential emissions (include dates of any stack tests conducted, versions of software used, source and dates of emission factors, etc.).

Engineering Estimate

Applicable Requirements
List all applicable requirements for this emission unit. For each applicable requirement, include the underlying rule/regulation citation and/or construction permit with the condition number. (*Note: Title V permit condition numbers alone are not the underlying applicable requirements*). If an emission limit is calculated based on the type of source and design capacity or if a standard is based on a design parameter, this information should also be included. **R13-1650K §4.1.13; 45CSR §7-3.7:** • Storage structure required to have full enclosure and equipped with PM control devices.
X Permit Shield
For all applicable requirements listed above, provide monitoring/testing/recordkeeping/reporting which shall be used to demonstrate compliance. If the method is based on a permit or rule, include the condition number or citation. (Note: Each requirement listed above must have an associated method of demonstrating compliance. If there is not already a required method in place, then a method must be proposed.) NA
Are you in compliance with all applicable requirements for this emission unit? X Yes ___No If no, complete the **Schedule of Compliance Form** as **ATTACHMENT F**.

ATTACHMENT E - Emission Unit Form

Emission Unit Description

Emission unit ID number:	**Emission unit name:**	**List any control devices associated with this emission unit:**
L17-F-7140	CSS-9 Product Silo	L15-M-7140

Provide a description of the emission unit (type, method of operation, design parameters, etc.):
CSS-9 Product Silo

Manufacturer:	**Model number:**	**Serial number:**
NA	NA	NA
Construction date:	**Installation date:**	**Modification date(s):**
NA	1991	NA

Design Capacity (examples: furnaces - tons/hr, tanks - gallons):
4,000 ft^3

Maximum Hourly Throughput:	**Maximum Annual Throughput:**	**Maximum Operating Schedule:**
42,000 lb/hr	183,960 tpy	8,760 hr/yr

Fuel Usage Data **(fill out all applicable fields)**

Does this emission unit combust fuel? ___ Yes X No	**If yes, is it?** ___ Indirect Fired ___Direct Fired
Maximum design heat input and/or maximum horsepower rating: NA	**Type and Btu/hr rating of burners:** NA

List the primary fuel type(s) and if applicable, the secondary fuel type(s). For each fuel type listed, provide the maximum hourly and annual fuel usage for each.
NA

Describe each fuel expected to be used during the term of the permit.

Fuel Type	Max. Sulfur Content	Max. Ash Content	BTU Value
NA	NA	NA	NA

Emissions Data		
Criteria Pollutants	Potential Emissions	
	PPH	TPY
Carbon Monoxide (CO)	NA	NA
Nitrogen Oxides (NO_X)	NA	NA
Lead (Pb)	NA	NA
Particulate Matter ($PM_{2.5}$)	NA	NA
Particulate Matter (PM_{10})	<0.001	0.03
Total Particulate Matter (TSP)	<0.001	0.03
Sulfur Dioxide (SO_2)	NA	NA
Volatile Organic Compounds (VOC)	NA	NA
Hazardous Air Pollutants	Potential Emissions	
	PPH	TPY
NA	NA	NA
Regulated Pollutants other than Criteria and HAP	Potential Emissions	
	PPH	TPY
NA	NA	NA

List the method(s) used to calculate the potential emissions (include dates of any stack tests conducted, versions of software used, source and dates of emission factors, etc.).

Engineering Estimate

Applicable Requirements
List all applicable requirements for this emission unit. For each applicable requirement, include the underlying rule/regulation citation and/or <u>construction permit</u> with the condition number. (*Note: Title V permit condition numbers alone are not the underlying applicable requirements*). If an emission limit is calculated based on the type of source and design capacity or if a standard is based on a design parameter, this information should also be included. **R13-1650K §4.1.13; 45CSR §7-3.7:** • Storage structure required to have full enclosure and equipped with PM control devices.
<u>X</u> Permit Shield
For all applicable requirements listed above, provide monitoring/testing/recordkeeping/reporting which shall be used to demonstrate compliance. If the method is based on a permit or rule, include the condition number or citation. (Note: Each requirement listed above must have an associated method of demonstrating compliance. If there is not already a required method in place, then a method must be proposed.) NA
Are you in compliance with all applicable requirements for this emission unit? <u>X</u> Yes ___No If no, complete the **Schedule of Compliance Form** as **ATTACHMENT F**.

ATTACHMENT E - Emission Unit Form

Emission Unit Description

Emission unit ID number:	**Emission unit name:**	**List any control devices associated with this emission unit:**
L15-F-1020	CSS-9 Salvage Silo	L15-M-1020

Provide a description of the emission unit (type, method of operation, design parameters, etc.):
CSS-9 Salvage Silo

Manufacturer:	**Model number:**	**Serial number:**
NA	NA	NA
Construction date:	**Installation date:**	**Modification date(s):**
NA	1977	NA

Design Capacity (examples: furnaces - tons/hr, tanks - gallons):
4,000 ft^3

Maximum Hourly Throughput:	**Maximum Annual Throughput:**	**Maximum Operating Schedule:**
42,000 lb/hr	183,960 tpy	8,760 hr/yr

Fuel Usage Data **(fill out all applicable fields)**

Does this emission unit combust fuel? ___ Yes X No	**If yes, is it?** ___ Indirect Fired ___Direct Fired
Maximum design heat input and/or maximum horsepower rating: NA	**Type and Btu/hr rating of burners:** NA

List the primary fuel type(s) and if applicable, the secondary fuel type(s). For each fuel type listed, provide the maximum hourly and annual fuel usage for each.
NA

Describe each fuel expected to be used during the term of the permit.

Fuel Type	Max. Sulfur Content	Max. Ash Content	BTU Value
NA	NA	NA	NA

Emissions Data		
Criteria Pollutants	Potential Emissions	
	PPH	TPY
Carbon Monoxide (CO)	NA	NA
Nitrogen Oxides (NO_X)	NA	NA
Lead (Pb)	NA	NA
Particulate Matter ($PM_{2.5}$)	NA	NA
Particulate Matter (PM_{10})	0.012	0.05
Total Particulate Matter (TSP)	0.012	0.05
Sulfur Dioxide (SO_2)	NA	NA
Volatile Organic Compounds (VOC)	NA	NA
Hazardous Air Pollutants	Potential Emissions	
	PPH	TPY
NA	NA	NA
Regulated Pollutants other than Criteria and HAP	Potential Emissions	
	PPH	TPY
NA	NA	NA

List the method(s) used to calculate the potential emissions (include dates of any stack tests conducted, versions of software used, source and dates of emission factors, etc.).

Engineering Estimate

Applicable Requirements
List all applicable requirements for this emission unit. For each applicable requirement, include the underlying rule/regulation citation and/or <u>construction permit</u> with the condition number. (*Note: Title V permit condition numbers alone are not the underlying applicable requirements*). If an emission limit is calculated based on the type of source and design capacity or if a standard is based on a design parameter, this information should also be included. **R13-1650K §4.1.13; 45CSR §7-3.7:** • Storage structure required to have full enclosure and equipped with PM control devices.
<u>X</u> Permit Shield
For all applicable requirements listed above, provide monitoring/testing/recordkeeping/reporting which shall be used to demonstrate compliance. If the method is based on a permit or rule, include the condition number or citation. (Note: Each requirement listed above must have an associated method of demonstrating compliance. If there is not already a required method in place, then a method must be proposed.) NA
Are you in compliance with all applicable requirements for this emission unit? <u>X</u> Yes ___No If no, complete the **Schedule of Compliance Form** as **ATTACHMENT F**.

ATTACHMENT E - Emission Unit Form

Emission Unit Description

Emission unit ID number:	**Emission unit name:**	**List any control devices associated with this emission unit:**
L15-F-1701A	CSS-9 Verification Bin	L15-M-1701A

Provide a description of the emission unit (type, method of operation, design parameters, etc.):
CSS-9 Verification Bin

Manufacturer:	**Model number:**	**Serial number:**
NA	NA	NA
Construction date:	**Installation date:**	**Modification date(s):**
NA	1988	NA

Design Capacity (examples: furnaces - tons/hr, tanks - gallons):
920 ft^3

Maximum Hourly Throughput:	**Maximum Annual Throughput:**	**Maximum Operating Schedule:**
42,000 lb/hr	183,960 tpy	8,760 hr/yr

Fuel Usage Data **(fill out all applicable fields)**

Does this emission unit combust fuel? ___ Yes X No	**If yes, is it?** ___ Indirect Fired ___Direct Fired
Maximum design heat input and/or maximum horsepower rating: NA	**Type and Btu/hr rating of burners:** NA

List the primary fuel type(s) and if applicable, the secondary fuel type(s). For each fuel type listed, provide the maximum hourly and annual fuel usage for each.
NA

Describe each fuel expected to be used during the term of the permit.

Fuel Type	Max. Sulfur Content	Max. Ash Content	BTU Value
NA	NA	NA	NA

Emissions Data		
Criteria Pollutants	Potential Emissions	
	PPH	TPY
Carbon Monoxide (CO)	NA	NA
Nitrogen Oxides (NO_X)	NA	NA
Lead (Pb)	NA	NA
Particulate Matter ($PM_{2.5}$)	NA	NA
Particulate Matter (PM_{10})	<0.001	0.003
Total Particulate Matter (TSP)	<0.001	0.003
Sulfur Dioxide (SO_2)	NA	NA
Volatile Organic Compounds (VOC)	NA	NA
Hazardous Air Pollutants	Potential Emissions	
	PPH	TPY
NA	NA	NA
Regulated Pollutants other than Criteria and HAP	Potential Emissions	
	PPH	TPY
NA	NA	NA

List the method(s) used to calculate the potential emissions (include dates of any stack tests conducted, versions of software used, source and dates of emission factors, etc.).

Engineering Estimate

Applicable Requirements
List all applicable requirements for this emission unit. For each applicable requirement, include the underlying rule/regulation citation and/or construction permit with the condition number. (*Note: Title V permit condition numbers alone are not the underlying applicable requirements*). If an emission limit is calculated based on the type of source and design capacity or if a standard is based on a design parameter, this information should also be included. NA
X Permit Shield
For all applicable requirements listed above, provide monitoring/testing/recordkeeping/reporting which shall be used to demonstrate compliance. If the method is based on a permit or rule, include the condition number or citation. (Note: Each requirement listed above must have an associated method of demonstrating compliance. If there is not already a required method in place, then a method must be proposed.) NA
Are you in compliance with all applicable requirements for this emission unit? X Yes ___No If no, complete the **Schedule of Compliance Form** as **ATTACHMENT F**.

CSS-10

ATTACHMENT E - Emission Unit Form

Emission Unit Description

Emission unit ID number:	**Emission unit name:**	**List any control devices associated with this emission unit:**
L3A-F-1030	CSS-10 Box and Bagging Blender	L3A-M-1050

Provide a description of the emission unit (type, method of operation, design parameters, etc.):
CSS-10 Box and Bagging Blender

Manufacturer:	**Model number:**	**Serial number:**
NA	NA	NA
Construction date:	**Installation date:**	**Modification date(s):**
NA	1994	NA

Design Capacity (examples: furnaces - tons/hr, tanks - gallons):
1,200 ft^3

Maximum Hourly Throughput:	**Maximum Annual Throughput:**	**Maximum Operating Schedule:**
18,000 lb/hr	78,840 tpy	8,760 hr/yr

Fuel Usage Data **(fill out all applicable fields)**

Does this emission unit combust fuel? ___ Yes X No	**If yes, is it?** ___ Indirect Fired ___Direct Fired
Maximum design heat input and/or maximum horsepower rating: NA	**Type and Btu/hr rating of burners:** NA

List the primary fuel type(s) and if applicable, the secondary fuel type(s). For each fuel type listed, provide the maximum hourly and annual fuel usage for each.
NA

Describe each fuel expected to be used during the term of the permit.

Fuel Type	Max. Sulfur Content	Max. Ash Content	BTU Value
NA	NA	NA	NA

Emissions Data		
Criteria Pollutants	Potential Emissions	
	PPH	TPY
Carbon Monoxide (CO)	NA	NA
Nitrogen Oxides (NO_X)	NA	NA
Lead (Pb)	NA	NA
Particulate Matter ($PM_{2.5}$)	NA	NA
Particulate Matter (PM_{10})	<0.001	<0.001
Total Particulate Matter (TSP)	<0.001	<0.001
Sulfur Dioxide (SO_2)	NA	NA
Volatile Organic Compounds (VOC)	NA	NA
Hazardous Air Pollutants	Potential Emissions	
	PPH	TPY
NA	NA	NA
Regulated Pollutants other than Criteria and HAP	Potential Emissions	
	PPH	TPY
NA	NA	NA

List the method(s) used to calculate the potential emissions (include dates of any stack tests conducted, versions of software used, source and dates of emission factors, etc.).

Engineering Estimate

Applicable Requirements
List all applicable requirements for this emission unit. For each applicable requirement, include the underlying rule/regulation citation and/or construction permit with the condition number. (*Note: Title V permit condition numbers alone are not the underlying applicable requirements*). If an emission limit is calculated based on the type of source and design capacity or if a standard is based on a design parameter, this information should also be included. NA
X Permit Shield
For all applicable requirements listed above, provide monitoring/testing/recordkeeping/reporting which shall be used to demonstrate compliance. If the method is based on a permit or rule, include the condition number or citation. (Note: Each requirement listed above must have an associated method of demonstrating compliance. If there is not already a required method in place, then a method must be proposed.) NA
Are you in compliance with all applicable requirements for this emission unit? X Yes ___No If no, complete the **Schedule of Compliance Form** as **ATTACHMENT F**.

ATTACHMENT E - Emission Unit Form

Emission Unit Description

Emission unit ID number:	**Emission unit name:**	**List any control devices associated with this emission unit:**
C3E-F-1440	CSS-10 Verification Bin	C3E-M-1590

Provide a description of the emission unit (type, method of operation, design parameters, etc.):
CSS-10 Verification Bin

Manufacturer:	**Model number:**	**Serial number:**
NA	NA	NA
Construction date:	**Installation date:**	**Modification date(s):**
NA	1994	NA

Design Capacity (examples: furnaces - tons/hr, tanks - gallons):
1,450 ft^3

Maximum Hourly Throughput:	**Maximum Annual Throughput:**	**Maximum Operating Schedule:**
18,000 lb/hr	78,840 tpy	8,760 hr/yr

Fuel Usage Data **(fill out all applicable fields)**

Does this emission unit combust fuel? ___ Yes X No	**If yes, is it?** ___ Indirect Fired ___Direct Fired
Maximum design heat input and/or maximum horsepower rating: NA	**Type and Btu/hr rating of burners:** NA

List the primary fuel type(s) and if applicable, the secondary fuel type(s). For each fuel type listed, provide the maximum hourly and annual fuel usage for each.
NA

Describe each fuel expected to be used during the term of the permit.

Fuel Type	Max. Sulfur Content	Max. Ash Content	BTU Value
NA	NA	NA	NA

Emissions Data		
Criteria Pollutants	Potential Emissions	
	PPH	TPY
Carbon Monoxide (CO)	NA	NA
Nitrogen Oxides (NO_X)	NA	NA
Lead (Pb)	NA	NA
Particulate Matter ($PM_{2.5}$)	NA	NA
Particulate Matter (PM_{10})	0.0013	0.005
Total Particulate Matter (TSP)	0.0013	0.005
Sulfur Dioxide (SO_2)	NA	NA
Volatile Organic Compounds (VOC)	NA	NA
Hazardous Air Pollutants	Potential Emissions	
	PPH	TPY
NA	NA	NA
Regulated Pollutants other than Criteria and HAP	Potential Emissions	
	PPH	TPY
NA	NA	NA

List the method(s) used to calculate the potential emissions (include dates of any stack tests conducted, versions of software used, source and dates of emission factors, etc.).

Engineering Estimate

Applicable Requirements
List all applicable requirements for this emission unit. For each applicable requirement, include the underlying rule/regulation citation and/or construction permit with the condition number. (*Note: Title V permit condition numbers alone are not the underlying applicable requirements*). If an emission limit is calculated based on the type of source and design capacity or if a standard is based on a design parameter, this information should also be included. NA
X Permit Shield
For all applicable requirements listed above, provide monitoring/testing/recordkeeping/reporting which shall be used to demonstrate compliance. If the method is based on a permit or rule, include the condition number or citation. (Note: Each requirement listed above must have an associated method of demonstrating compliance. If there is not already a required method in place, then a method must be proposed.) NA
Are you in compliance with all applicable requirements for this emission unit? X Yes ___No If no, complete the **Schedule of Compliance Form** as **ATTACHMENT F**.

ATTACHMENT E - Emission Unit Form

Emission Unit Description

Emission unit ID number:	**Emission unit name:**	**List any control devices associated with this emission unit:**
C3A-E-3240	CSS-10 Crystallizer & Heater	C3A-M-3350

Provide a description of the emission unit (type, method of operation, design parameters, etc.):
CSS-10 Crystallizer & Heater

Manufacturer:	**Model number:**	**Serial number:**
NA	NA	NA
Construction date:	**Installation date:**	**Modification date(s):**
NA	1994	NA

Design Capacity (examples: furnaces - tons/hr, tanks - gallons):
1.54 mmBtu/hr

Maximum Hourly Throughput:	**Maximum Annual Throughput:**	**Maximum Operating Schedule:**
18,000 lb/hr	78,840 tpy	8,760 hr/yr

Fuel Usage Data **(fill out all applicable fields)**

Does this emission unit combust fuel? X Yes ___ No	**If yes, is it?** X Indirect Fired ___Direct Fired
Maximum design heat input and/or maximum horsepower rating: 1.54 mmBtu/hr	**Type and Btu/hr rating of burners:** 1.54 mmBtu/hr

List the primary fuel type(s) and if applicable, the secondary fuel type(s). For each fuel type listed, provide the maximum hourly and annual fuel usage for each.
Natural Gas – 1,604 scf/hr; 14.1 mmscf/yr

Describe each fuel expected to be used during the term of the permit.

Fuel Type	Max. Sulfur Content	Max. Ash Content	BTU Value
Natural	0.01 wt%	NA	960 Btu/scf

Emissions Data		
Criteria Pollutants	Potential Emissions	
	PPH	TPY
Carbon Monoxide (CO)	0.02	0.09
Nitrogen Oxides (NO_X)	0.08	0.35
Lead (Pb)	NA	NA
Particulate Matter ($PM_{2.5}$)	NA	NA
Particulate Matter (PM_{10})	0.004	0.02
Total Particulate Matter (TSP)	0.004	0.02
Sulfur Dioxide (SO_2)	0.001	0.004
Volatile Organic Compounds (VOC)	0.37	1.53
Hazardous Air Pollutants	Potential Emissions	
	PPH	TPY
Ethylene Glycol	0.30	1.25
Acetaldehyde	0.06	0.23
Regulated Pollutants other than Criteria and HAP	Potential Emissions	
	PPH	TPY
NA	NA	NA

List the method(s) used to calculate the potential emissions (include dates of any stack tests conducted, versions of software used, source and dates of emission factors, etc.).

Engineering Estimate

Applicable Requirements
List all applicable requirements for this emission unit. For each applicable requirement, include the underlying rule/regulation citation and/or construction permit with the condition number. (*Note: Title V permit condition numbers alone are not the underlying applicable requirements*). If an emission limit is calculated based on the type of source and design capacity or if a standard is based on a design parameter, this information should also be included. NA
X Permit Shield
For all applicable requirements listed above, provide monitoring/testing/recordkeeping/reporting which shall be used to demonstrate compliance. If the method is based on a permit or rule, include the condition number or citation. (Note: Each requirement listed above must have an associated method of demonstrating compliance. If there is not already a required method in place, then a method must be proposed.) NA
Are you in compliance with all applicable requirements for this emission unit? X Yes ___No If no, complete the **Schedule of Compliance Form** as **ATTACHMENT F**.

ATTACHMENT E - Emission Unit Form

Emission Unit Description

Emission unit ID number:	**Emission unit name:**	**List any control devices associated with this emission unit:**
C3A-F-1410	CSS-10 Crystallizer Blending Silo	C3A-M-1340

Provide a description of the emission unit (type, method of operation, design parameters, etc.):
CSS-10 Crystallizer Blending Silo

Manufacturer:	**Model number:**	**Serial number:**
NA	NA	NA
Construction date:	**Installation date:**	**Modification date(s):**
NA	1994	NA

Design Capacity (examples: furnaces - tons/hr, tanks - gallons):
3,500 ft^3

Maximum Hourly Throughput:	**Maximum Annual Throughput:**	**Maximum Operating Schedule:**
18,000 lb/hr	78,840 tpy	8,760 hr/yr

Fuel Usage Data **(fill out all applicable fields)**

Does this emission unit combust fuel? ___Yes _X_ No	**If yes, is it?** ___ Indirect Fired ___Direct Fired
Maximum design heat input and/or maximum horsepower rating: NA	**Type and Btu/hr rating of burners:** NA

List the primary fuel type(s) and if applicable, the secondary fuel type(s). For each fuel type listed, provide the maximum hourly and annual fuel usage for each.
NA

Describe each fuel expected to be used during the term of the permit.

Fuel Type	Max. Sulfur Content	Max. Ash Content	BTU Value
NA	NA	NA	NA

Emissions Data		
Criteria Pollutants	Potential Emissions	
	PPH	TPY
Carbon Monoxide (CO)	NA	NA
Nitrogen Oxides (NO_X)	NA	NA
Lead (Pb)	NA	NA
Particulate Matter ($PM_{2.5}$)	NA	NA
Particulate Matter (PM_{10})	0.004	0.002
Total Particulate Matter (TSP)	0.004	0.002
Sulfur Dioxide (SO_2)	NA	NA
Volatile Organic Compounds (VOC)	NA	NA
Hazardous Air Pollutants	Potential Emissions	
	PPH	TPY
NA	NA	NA
Regulated Pollutants other than Criteria and HAP	Potential Emissions	
	PPH	TPY
NA	NA	NA

List the method(s) used to calculate the potential emissions (include dates of any stack tests conducted, versions of software used, source and dates of emission factors, etc.).

Engineering Estimate

Applicable Requirements

List all applicable requirements for this emission unit. For each applicable requirement, include the underlying rule/regulation citation and/or construction permit with the condition number. (*Note: Title V permit condition numbers alone are not the underlying applicable requirements*). If an emission limit is calculated based on the type of source and design capacity or if a standard is based on a design parameter, this information should also be included.

R13-1650K §4.1.13; 45CSR §7-3.7:

- Storage structure required to have full enclosure and equipped with PM control devices.

X Permit Shield

For all applicable requirements listed above, provide monitoring/testing/recordkeeping/reporting which shall be used to demonstrate compliance. If the method is based on a permit or rule, include the condition number or citation. (Note: Each requirement listed above must have an associated method of demonstrating compliance. If there is not already a required method in place, then a method must be proposed.)

NA

Are you in compliance with all applicable requirements for this emission unit? X Yes ___No

If no, complete the **Schedule of Compliance Form** as **ATTACHMENT F**.

ATTACHMENT E - Emission Unit Form

Emission Unit Description

Emission unit ID number:	**Emission unit name:**	**List any control devices associated with this emission unit:**
C3A-F-2460	CSS-10 Crystallizer Surge Bin	C3A-M-2390

Provide a description of the emission unit (type, method of operation, design parameters, etc.):
CSS-10 Crystallizer Surge Bin

Manufacturer:	**Model number:**	**Serial number:**
NA	NA	NA
Construction date:	**Installation date:**	**Modification date(s):**
NA	1994	NA

Design Capacity (examples: furnaces - tons/hr, tanks - gallons):
1,570 ft^3

Maximum Hourly Throughput:	**Maximum Annual Throughput:**	**Maximum Operating Schedule:**
18,000 lb/hr	78,840 tpy	8,760 hr/yr

Fuel Usage Data **(fill out all applicable fields)**

Does this emission unit combust fuel? ___Yes _X_ No	**If yes, is it?** ___ Indirect Fired ___Direct Fired
Maximum design heat input and/or maximum horsepower rating: NA	**Type and Btu/hr rating of burners:** NA

List the primary fuel type(s) and if applicable, the secondary fuel type(s). For each fuel type listed, provide the maximum hourly and annual fuel usage for each.
NA

Describe each fuel expected to be used during the term of the permit.

Fuel Type	Max. Sulfur Content	Max. Ash Content	BTU Value
NA	NA	NA	NA

Emissions Data		
Criteria Pollutants	Potential Emissions	
	PPH	TPY
Carbon Monoxide (CO)	NA	NA
Nitrogen Oxides (NO_X)	NA	NA
Lead (Pb)	NA	NA
Particulate Matter ($PM_{2.5}$)	NA	NA
Particulate Matter (PM_{10})	0.001	0.005
Total Particulate Matter (TSP)	0.001	0.005
Sulfur Dioxide (SO_2)	NA	NA
Volatile Organic Compounds (VOC)	NA	NA
Hazardous Air Pollutants	Potential Emissions	
	PPH	TPY
NA	NA	NA
Regulated Pollutants other than Criteria and HAP	Potential Emissions	
	PPH	TPY
NA	NA	NA

List the method(s) used to calculate the potential emissions (include dates of any stack tests conducted, versions of software used, source and dates of emission factors, etc.).

Engineering Estimate

Applicable Requirements
List all applicable requirements for this emission unit. For each applicable requirement, include the underlying rule/regulation citation and/or construction permit with the condition number. (*Note: Title V permit condition numbers alone are not the underlying applicable requirements*). If an emission limit is calculated based on the type of source and design capacity or if a standard is based on a design parameter, this information should also be included. NA
X Permit Shield
For all applicable requirements listed above, provide monitoring/testing/recordkeeping/reporting which shall be used to demonstrate compliance. If the method is based on a permit or rule, include the condition number or citation. (Note: Each requirement listed above must have an associated method of demonstrating compliance. If there is not already a required method in place, then a method must be proposed.) NA
Are you in compliance with all applicable requirements for this emission unit? X Yes ___No If no, complete the **Schedule of Compliance Form** as **ATTACHMENT F**.

ATTACHMENT E - Emission Unit Form

Emission Unit Description

Emission unit ID number:	**Emission unit name:**	**List any control devices associated with this emission unit:**
L3A-M-1070	CSS-10 Fines Elutriator	NA

Provide a description of the emission unit (type, method of operation, design parameters, etc.):
CSS-10 Fines Elutriator

Manufacturer:	**Model number:**	**Serial number:**
NA	NA	NA
Construction date:	**Installation date:**	**Modification date(s):**
NA	1994	NA

Design Capacity (examples: furnaces - tons/hr, tanks - gallons):
150 ft^2

Maximum Hourly Throughput:	**Maximum Annual Throughput:**	**Maximum Operating Schedule:**
18,000 lb/hr	78,840 tpy	8,760 hr/yr

Fuel Usage Data **(fill out all applicable fields)**

Does this emission unit combust fuel? ___ Yes X No	**If yes, is it?** ___ Indirect Fired ___Direct Fired
Maximum design heat input and/or maximum horsepower rating: NA	**Type and Btu/hr rating of burners:** NA

List the primary fuel type(s) and if applicable, the secondary fuel type(s). For each fuel type listed, provide the maximum hourly and annual fuel usage for each.
NA

Describe each fuel expected to be used during the term of the permit.

Fuel Type	Max. Sulfur Content	Max. Ash Content	BTU Value
NA	NA	NA	NA

Emissions Data		
Criteria Pollutants	Potential Emissions	
	PPH	TPY
Carbon Monoxide (CO)	NA	NA
Nitrogen Oxides (NO_X)	NA	NA
Lead (Pb)	NA	NA
Particulate Matter ($PM_{2.5}$)	NA	NA
Particulate Matter (PM_{10})	0.001	0.004
Total Particulate Matter (TSP)	0.001	0.004
Sulfur Dioxide (SO_2)	NA	NA
Volatile Organic Compounds (VOC)	NA	NA
Hazardous Air Pollutants	Potential Emissions	
	PPH	TPY
NA	NA	NA
Regulated Pollutants other than Criteria and HAP	Potential Emissions	
	PPH	TPY
NA	NA	NA

List the method(s) used to calculate the potential emissions (include dates of any stack tests conducted, versions of software used, source and dates of emission factors, etc.).

Engineering Estimate

Applicable Requirements
List all applicable requirements for this emission unit. For each applicable requirement, include the underlying rule/regulation citation and/or construction permit with the condition number. (*Note: Title V permit condition numbers alone are not the underlying applicable requirements*). If an emission limit is calculated based on the type of source and design capacity or if a standard is based on a design parameter, this information should also be included. NA
X Permit Shield
For all applicable requirements listed above, provide monitoring/testing/recordkeeping/reporting which shall be used to demonstrate compliance. If the method is based on a permit or rule, include the condition number or citation. (Note: Each requirement listed above must have an associated method of demonstrating compliance. If there is not already a required method in place, then a method must be proposed.) NA
Are you in compliance with all applicable requirements for this emission unit? X Yes ___No If no, complete the **Schedule of Compliance Form** as **ATTACHMENT F**.

ATTACHMENT E - Emission Unit Form

Emission Unit Description

Emission unit ID number:	**Emission unit name:**	**List any control devices associated with this emission unit:**
L1A-M-1140	CSS-10 Fines Elutriator	NA

Provide a description of the emission unit (type, method of operation, design parameters, etc.):
CSS-10 Fines Elutriator

Manufacturer:	**Model number:**	**Serial number:**
NA	NA	NA
Construction date:	**Installation date:**	**Modification date(s):**
NA	1994	NA

Design Capacity (examples: furnaces - tons/hr, tanks - gallons):
150 ft^2

Maximum Hourly Throughput:	**Maximum Annual Throughput:**	**Maximum Operating Schedule:**
18,000 lb/hr	78,840 tpy	8,760 hr/yr

Fuel Usage Data **(fill out all applicable fields)**

Does this emission unit combust fuel? ___ Yes X No	**If yes, is it?** ___ Indirect Fired ___Direct Fired
Maximum design heat input and/or maximum horsepower rating: NA	**Type and Btu/hr rating of burners:** NA

List the primary fuel type(s) and if applicable, the secondary fuel type(s). For each fuel type listed, provide the maximum hourly and annual fuel usage for each.
NA

Describe each fuel expected to be used during the term of the permit.

Fuel Type	Max. Sulfur Content	Max. Ash Content	BTU Value
NA	NA	NA	NA

Emissions Data		
Criteria Pollutants	Potential Emissions	
	PPH	TPY
Carbon Monoxide (CO)	NA	NA
Nitrogen Oxides (NO_X)	NA	NA
Lead (Pb)	NA	NA
Particulate Matter ($PM_{2.5}$)	NA	NA
Particulate Matter (PM_{10})	0.001	0.004
Total Particulate Matter (TSP)	0.001	0.004
Sulfur Dioxide (SO_2)	NA	NA
Volatile Organic Compounds (VOC)	NA	NA
Hazardous Air Pollutants	Potential Emissions	
	PPH	TPY
NA	NA	NA
Regulated Pollutants other than Criteria and HAP	Potential Emissions	
	PPH	TPY
NA	NA	NA

List the method(s) used to calculate the potential emissions (include dates of any stack tests conducted, versions of software used, source and dates of emission factors, etc.).

Engineering Estimate

Applicable Requirements
List all applicable requirements for this emission unit. For each applicable requirement, include the underlying rule/regulation citation and/or construction permit with the condition number. (*Note: Title V permit condition numbers alone are not the underlying applicable requirements*). If an emission limit is calculated based on the type of source and design capacity or if a standard is based on a design parameter, this information should also be included. NA
X Permit Shield
For all applicable requirements listed above, provide monitoring/testing/recordkeeping/reporting which shall be used to demonstrate compliance. If the method is based on a permit or rule, include the condition number or citation. (Note: Each requirement listed above must have an associated method of demonstrating compliance. If there is not already a required method in place, then a method must be proposed.) NA
Are you in compliance with all applicable requirements for this emission unit? X Yes ___No If no, complete the **Schedule of Compliance Form** as **ATTACHMENT F**.

ATTACHMENT E - Emission Unit Form

Emission Unit Description

Emission unit ID number:	**Emission unit name:**	**List any control devices associated with this emission unit:**
C3B-E-2250	CSS-10 Preheater & Heater	C3B-M-2420

Provide a description of the emission unit (type, method of operation, design parameters, etc.):
CSS-10 Preheater & Heater

Manufacturer:	**Model number:**	**Serial number:**
NA	NA	NA
Construction date:	**Installation date:**	**Modification date(s):**
NA	1994	NA

Design Capacity (examples: furnaces - tons/hr, tanks - gallons):
0.66 mmBtu/hr

Maximum Hourly Throughput:	**Maximum Annual Throughput:**	**Maximum Operating Schedule:**
18,000 lb/hr	78,840 tpy	8,760 hr/yr

Fuel Usage Data **(fill out all applicable fields)**

Does this emission unit combust fuel? X Yes ___ No	**If yes, is it?** X Indirect Fired ___Direct Fired
Maximum design heat input and/or maximum horsepower rating: 0.66 mmBtu/hr	**Type and Btu/hr rating of burners:** 0.66 mmBtu/hr

List the primary fuel type(s) and if applicable, the secondary fuel type(s). For each fuel type listed, provide the maximum hourly and annual fuel usage for each.
Natural Gas – 688 scf/hr; 6.03 mmscf/yr

Describe each fuel expected to be used during the term of the permit.

Fuel Type	Max. Sulfur Content	Max. Ash Content	BTU Value
Natural	0.01 wt%	NA	960 Btu/scf

Emissions Data		
Criteria Pollutants	Potential Emissions	
	PPH	TPY
Carbon Monoxide (CO)	0.009	0.04
Nitrogen Oxides (NO_X)	0.05	0.22
Lead (Pb)	NA	NA
Particulate Matter ($PM_{2.5}$)	NA	NA
Particulate Matter (PM_{10})	0.003	0.013
Total Particulate Matter (TSP)	0.003	0.013
Sulfur Dioxide (SO_2)	<0.001	0.002
Volatile Organic Compounds (VOC)	0.23	1.01
Hazardous Air Pollutants	Potential Emissions	
	PPH	TPY
Ethylene Glycol	0.08	0.35
Acetaldehyde	0.13	0.57
Regulated Pollutants other than Criteria and HAP	Potential Emissions	
	PPH	TPY
NA	NA	NA

List the method(s) used to calculate the potential emissions (include dates of any stack tests conducted, versions of software used, source and dates of emission factors, etc.).

Engineering Estimate

Applicable Requirements
List all applicable requirements for this emission unit. For each applicable requirement, include the underlying rule/regulation citation and/or construction permit with the condition number. (*Note: Title V permit condition numbers alone are not the underlying applicable requirements*). If an emission limit is calculated based on the type of source and design capacity or if a standard is based on a design parameter, this information should also be included. NA
X Permit Shield
For all applicable requirements listed above, provide monitoring/testing/recordkeeping/reporting which shall be used to demonstrate compliance. If the method is based on a permit or rule, include the condition number or citation. (Note: Each requirement listed above must have an associated method of demonstrating compliance. If there is not already a required method in place, then a method must be proposed.) NA
Are you in compliance with all applicable requirements for this emission unit? X Yes ___No If no, complete the **Schedule of Compliance Form** as **ATTACHMENT F**.

ATTACHMENT E - Emission Unit Form

Emission Unit Description

Emission unit ID number:	**Emission unit name:**	**List any control devices associated with this emission unit:**
C3B-F-1420	CSS-10 Preheater Surge Bin	C3B-M-1430 and C3T-B-1600

Provide a description of the emission unit (type, method of operation, design parameters, etc.):
CSS-10 Preheater Surge Bin

Manufacturer:	**Model number:**	**Serial number:**
NA	NA	NA
Construction date:	**Installation date:**	**Modification date(s):**
NA	1994	NA

Design Capacity (examples: furnaces - tons/hr, tanks - gallons):
785 ft^3

Maximum Hourly Throughput:	**Maximum Annual Throughput:**	**Maximum Operating Schedule:**
18,000 lb/hr	78,840 tpy	8,760 hr/yr

Fuel Usage Data **(fill out all applicable fields)**

Does this emission unit combust fuel? ___ Yes X No	**If yes, is it?** ___ Indirect Fired ___Direct Fired
Maximum design heat input and/or maximum horsepower rating: NA	**Type and Btu/hr rating of burners:** NA

List the primary fuel type(s) and if applicable, the secondary fuel type(s). For each fuel type listed, provide the maximum hourly and annual fuel usage for each.
NA

Describe each fuel expected to be used during the term of the permit.

Fuel Type	Max. Sulfur Content	Max. Ash Content	BTU Value
NA	NA	NA	NA

Emissions Data		
Criteria Pollutants	Potential Emissions	
	PPH	TPY
Carbon Monoxide (CO)	See Emissions from Hot Oil Heater C3T-B-1600.	
Nitrogen Oxides (NO_X)		
Lead (Pb)		
Particulate Matter ($PM_{2.5}$)		
Particulate Matter (PM_{10})		
Total Particulate Matter (TSP)		
Sulfur Dioxide (SO_2)		
Volatile Organic Compounds (VOC)		
Hazardous Air Pollutants	Potential Emissions	
	PPH	TPY
See Emission from Hot Oil Heater C3T-B-1600.		
Regulated Pollutants other than Criteria and HAP	Potential Emissions	
	PPH	TPY
NA	NA	NA

List the method(s) used to calculate the potential emissions (include dates of any stack tests conducted, versions of software used, source and dates of emission factors, etc.).

Engineering Estimate

Applicable Requirements
List all applicable requirements for this emission unit. For each applicable requirement, include the underlying rule/regulation citation and/or construction permit with the condition number. (*Note: Title V permit condition numbers alone are not the underlying applicable requirements*). If an emission limit is calculated based on the type of source and design capacity or if a standard is based on a design parameter, this information should also be included. NA
X Permit Shield
For all applicable requirements listed above, provide monitoring/testing/recordkeeping/reporting which shall be used to demonstrate compliance. If the method is based on a permit or rule, include the condition number or citation. (Note: Each requirement listed above must have an associated method of demonstrating compliance. If there is not already a required method in place, then a method must be proposed.) NA
Are you in compliance with all applicable requirements for this emission unit? X Yes ___No If no, complete the **Schedule of Compliance Form** as **ATTACHMENT F**.

ATTACHMENT E - Emission Unit Form

Emission Unit Description

Emission unit ID number:	**Emission unit name:**	**List any control devices associated with this emission unit:**
C3D-E-1280	CSS-10 Product Cooler	C3D-M-0520

Provide a description of the emission unit (type, method of operation, design parameters, etc.):
CSS-10 Product Cooler

Manufacturer:	**Model number:**	**Serial number:**
NA	NA	NA
Construction date:	**Installation date:**	**Modification date(s):**
NA	1994	NA

Design Capacity (examples: furnaces - tons/hr, tanks - gallons):
18,000 lb/hr

Maximum Hourly Throughput:	**Maximum Annual Throughput:**	**Maximum Operating Schedule:**
18,000 lb/hr	78,840 tpy	8,760 hr/yr

Fuel Usage Data **(fill out all applicable fields)**

Does this emission unit combust fuel? ___ Yes X No	**If yes, is it?** ___ Indirect Fired ___Direct Fired
Maximum design heat input and/or maximum horsepower rating: NA	**Type and Btu/hr rating of burners:** NA

List the primary fuel type(s) and if applicable, the secondary fuel type(s). For each fuel type listed, provide the maximum hourly and annual fuel usage for each.
NA

Describe each fuel expected to be used during the term of the permit.

Fuel Type	Max. Sulfur Content	Max. Ash Content	BTU Value
NA	NA	NA	NA

Emissions Data		
Criteria Pollutants	Potential Emissions	
	PPH	TPY
Carbon Monoxide (CO)	NA	NA
Nitrogen Oxides (NO_X)	NA	NA
Lead (Pb)	NA	NA
Particulate Matter ($PM_{2.5}$)	NA	NA
Particulate Matter (PM_{10})	0.02	0.06
Total Particulate Matter (TSP)	0.02	0.06
Sulfur Dioxide (SO_2)	NA	NA
Volatile Organic Compounds (VOC)	0.19	0.80
Hazardous Air Pollutants	Potential Emissions	
	PPH	TPY
Ethylene Glycol	0.15	0.62
Acetaldehyde	0.01	0.02
Regulated Pollutants other than Criteria and HAP	Potential Emissions	
	PPH	TPY
NA	NA	NA

List the method(s) used to calculate the potential emissions (include dates of any stack tests conducted, versions of software used, source and dates of emission factors, etc.).

Engineering Estimate

Applicable Requirements
List all applicable requirements for this emission unit. For each applicable requirement, include the underlying rule/regulation citation and/or construction permit with the condition number. (*Note: Title V permit condition numbers alone are not the underlying applicable requirements*). If an emission limit is calculated based on the type of source and design capacity or if a standard is based on a design parameter, this information should also be included. NA
X Permit Shield
For all applicable requirements listed above, provide monitoring/testing/recordkeeping/reporting which shall be used to demonstrate compliance. If the method is based on a permit or rule, include the condition number or citation. (Note: Each requirement listed above must have an associated method of demonstrating compliance. If there is not already a required method in place, then a method must be proposed.) NA
Are you in compliance with all applicable requirements for this emission unit? X Yes ___No If no, complete the **Schedule of Compliance Form** as **ATTACHMENT F**.

ATTACHMENT E - Emission Unit Form

Emission Unit Description

Emission unit ID number:	**Emission unit name:**	**List any control devices associated with this emission unit:**
L1A-F-1090	CSS-10 Product Silo	L1A-M-1130

Provide a description of the emission unit (type, method of operation, design parameters, etc.):
CSS-10 Product Silo

Manufacturer:	**Model number:**	**Serial number:**
NA	NA	NA
Construction date:	**Installation date:**	**Modification date(s):**
NA	1994	NA

Design Capacity (examples: furnaces - tons/hr, tanks - gallons):
4,000 ft^3

Maximum Hourly Throughput:	**Maximum Annual Throughput:**	**Maximum Operating Schedule:**
18,000 lb/hr	78,840 tpy	8,760 hr/yr

Fuel Usage Data **(fill out all applicable fields)**

Does this emission unit combust fuel? ___ Yes X No	**If yes, is it?** ___ Indirect Fired ___Direct Fired
Maximum design heat input and/or maximum horsepower rating: NA	**Type and Btu/hr rating of burners:** NA

List the primary fuel type(s) and if applicable, the secondary fuel type(s). For each fuel type listed, provide the maximum hourly and annual fuel usage for each.
NA

Describe each fuel expected to be used during the term of the permit.

Fuel Type	Max. Sulfur Content	Max. Ash Content	BTU Value
NA	NA	NA	NA

Emissions Data		
Criteria Pollutants	Potential Emissions	
	PPH	TPY
Carbon Monoxide (CO)	NA	NA
Nitrogen Oxides (NO_X)	NA	NA
Lead (Pb)	NA	NA
Particulate Matter ($PM_{2.5}$)	NA	NA
Particulate Matter (PM_{10})	0.011	<0.001
Total Particulate Matter (TSP)	0.011	<0.001
Sulfur Dioxide (SO_2)	NA	NA
Volatile Organic Compounds (VOC)	NA	NA
Hazardous Air Pollutants	Potential Emissions	
	PPH	TPY
NA	NA	NA
Regulated Pollutants other than Criteria and HAP	Potential Emissions	
	PPH	TPY
NA	NA	NA

List the method(s) used to calculate the potential emissions (include dates of any stack tests conducted, versions of software used, source and dates of emission factors, etc.).

Engineering Estimate

Applicable Requirements
List all applicable requirements for this emission unit. For each applicable requirement, include the underlying rule/regulation citation and/or <u>construction permit</u> with the condition number. (*Note: Title V permit condition numbers alone are not the underlying applicable requirements*). If an emission limit is calculated based on the type of source and design capacity or if a standard is based on a design parameter, this information should also be included. **R13-1650K §4.1.13; 45CSR §7-3.7:** • Storage structure required to have full enclosure and equipped with PM control devices.
<u>X</u> Permit Shield
For all applicable requirements listed above, provide monitoring/testing/recordkeeping/reporting which shall be used to demonstrate compliance. If the method is based on a permit or rule, include the condition number or citation. (Note: Each requirement listed above must have an associated method of demonstrating compliance. If there is not already a required method in place, then a method must be proposed.) NA
Are you in compliance with all applicable requirements for this emission unit? <u>X</u> Yes ___No If no, complete the **Schedule of Compliance Form** as **ATTACHMENT F**.

ATTACHMENT E - Emission Unit Form

Emission Unit Description

Emission unit ID number:	**Emission unit name:**	**List any control devices associated with this emission unit:**
L1A-F-1100	CSS-10 Product Silo	L1A-M-1130

Provide a description of the emission unit (type, method of operation, design parameters, etc.):
CSS-10 Product Silo

Manufacturer:	**Model number:**	**Serial number:**
NA	NA	NA
Construction date:	**Installation date:**	**Modification date(s):**
NA	1994	NA

Design Capacity (examples: furnaces - tons/hr, tanks - gallons):
4,000 ft^3

Maximum Hourly Throughput:	**Maximum Annual Throughput:**	**Maximum Operating Schedule:**
18,000 lb/hr	78,840 tpy	8,760 hr/yr

Fuel Usage Data **(fill out all applicable fields)**

Does this emission unit combust fuel? ___ Yes X No	**If yes, is it?** ___ Indirect Fired ___Direct Fired
Maximum design heat input and/or maximum horsepower rating: NA	**Type and Btu/hr rating of burners:** NA

List the primary fuel type(s) and if applicable, the secondary fuel type(s). For each fuel type listed, provide the maximum hourly and annual fuel usage for each.
NA

Describe each fuel expected to be used during the term of the permit.

Fuel Type	Max. Sulfur Content	Max. Ash Content	BTU Value
NA	NA	NA	NA

Emissions Data		
Criteria Pollutants	Potential Emissions	
	PPH	TPY
Carbon Monoxide (CO)	NA	NA
Nitrogen Oxides (NO_X)	NA	NA
Lead (Pb)	NA	NA
Particulate Matter ($PM_{2.5}$)	NA	NA
Particulate Matter (PM_{10})	Included with Silo L1A-F-1090	Included with Silo L1A-F-1090
Total Particulate Matter (TSP)	Included with Silo L1A-F-1090	Included with Silo L1A-F-1090
Sulfur Dioxide (SO_2)	NA	NA
Volatile Organic Compounds (VOC)	NA	NA
Hazardous Air Pollutants	Potential Emissions	
	PPH	TPY
NA	NA	NA
Regulated Pollutants other than Criteria and HAP	Potential Emissions	
	PPH	TPY
NA	NA	NA

List the method(s) used to calculate the potential emissions (include dates of any stack tests conducted, versions of software used, source and dates of emission factors, etc.).

Engineering Estimate

Applicable Requirements
List all applicable requirements for this emission unit. For each applicable requirement, include the underlying rule/regulation citation and/or <u>construction permit</u> with the condition number. (*Note: Title V permit condition numbers alone are not the underlying applicable requirements*). If an emission limit is calculated based on the type of source and design capacity or if a standard is based on a design parameter, this information should also be included. **R13-1650K §4.1.13; 45CSR §7-3.7:** • Storage structure required to have full enclosure and equipped with PM control devices.
<u>X</u> Permit Shield
For all applicable requirements listed above, provide monitoring/testing/recordkeeping/reporting which shall be used to demonstrate compliance. If the method is based on a permit or rule, include the condition number or citation. (Note: Each requirement listed above must have an associated method of demonstrating compliance. If there is not already a required method in place, then a method must be proposed.) NA
Are you in compliance with all applicable requirements for this emission unit? <u>X</u> Yes ___No If no, complete the **Schedule of Compliance Form** as **ATTACHMENT F**.

ATTACHMENT E - Emission Unit Form

Emission Unit Description

Emission unit ID number:	**Emission unit name:**	**List any control devices associated with this emission unit:**
C3C-R-1060	CSS-10 R/6 Reactor	C3T-B-1600

Provide a description of the emission unit (type, method of operation, design parameters, etc.):
CSS-10 R/6 Reactor

Manufacturer:	**Model number:**	**Serial number:**
NA	NA	NA
Construction date:	**Installation date:**	**Modification date(s):**
NA	1994	NA

Design Capacity (examples: furnaces - tons/hr, tanks - gallons):
2,404 ft^3

Maximum Hourly Throughput:	**Maximum Annual Throughput:**	**Maximum Operating Schedule:**
18,000 lb/hr	78,840 tpy	8,760 hr/yr

Fuel Usage Data **(fill out all applicable fields)**

Does this emission unit combust fuel? ___ Yes X No	**If yes, is it?** ___ Indirect Fired ___Direct Fired
Maximum design heat input and/or maximum horsepower rating: NA	**Type and Btu/hr rating of burners:** NA

List the primary fuel type(s) and if applicable, the secondary fuel type(s). For each fuel type listed, provide the maximum hourly and annual fuel usage for each.
NA

Describe each fuel expected to be used during the term of the permit.

Fuel Type	Max. Sulfur Content	Max. Ash Content	BTU Value
NA	NA	NA	NA

Emissions Data		
Criteria Pollutants	Potential Emissions	
	PPH	TPY
Carbon Monoxide (CO)	See Emissions from Hot Oil Heater C3T-B-1600.	
Nitrogen Oxides (NO_X)		
Lead (Pb)		
Particulate Matter ($PM_{2.5}$)		
Particulate Matter (PM_{10})		
Total Particulate Matter (TSP)		
Sulfur Dioxide (SO_2)		
Volatile Organic Compounds (VOC)		
Hazardous Air Pollutants	Potential Emissions	
	PPH	TPY
See Emission from Hot Oil Heater C3T-B-1600.		
Regulated Pollutants other than Criteria and HAP	Potential Emissions	
	PPH	TPY
NA	NA	NA

List the method(s) used to calculate the potential emissions (include dates of any stack tests conducted, versions of software used, source and dates of emission factors, etc.).

Engineering Estimate

Applicable Requirements
List all applicable requirements for this emission unit. For each applicable requirement, include the underlying rule/regulation citation and/or construction permit with the condition number. (*Note: Title V permit condition numbers alone are not the underlying applicable requirements*). If an emission limit is calculated based on the type of source and design capacity or if a standard is based on a design parameter, this information should also be included. NA
X Permit Shield
For all applicable requirements listed above, provide monitoring/testing/recordkeeping/reporting which shall be used to demonstrate compliance. If the method is based on a permit or rule, include the condition number or citation. (Note: Each requirement listed above must have an associated method of demonstrating compliance. If there is not already a required method in place, then a method must be proposed.) NA
Are you in compliance with all applicable requirements for this emission unit? X Yes ___No If no, complete the **Schedule of Compliance Form** as **ATTACHMENT F**.

CSS-11

ATTACHMENT E - Emission Unit Form

Emission Unit Description

Emission unit ID number:	**Emission unit name:**	**List any control devices associated with this emission unit:**
L3B-F-2040	CSS-11 Box and Bagging Blender	L3B-M-2060

Provide a description of the emission unit (type, method of operation, design parameters, etc.):
CSS-11 Box and Bagging Blender

Manufacturer:	**Model number:**	**Serial number:**
NA	NA	NA
Construction date:	**Installation date:**	**Modification date(s):**
NA	1994	NA

Design Capacity (examples: furnaces - tons/hr, tanks - gallons):
1,200 ft^3

Maximum Hourly Throughput:	**Maximum Annual Throughput:**	**Maximum Operating Schedule:**
18,000 lb/hr	78,840 tpy	8,760 hr/yr

Fuel Usage Data **(fill out all applicable fields)**

Does this emission unit combust fuel? ___ Yes X No	**If yes, is it?** ___ Indirect Fired ___Direct Fired
Maximum design heat input and/or maximum horsepower rating: NA	**Type and Btu/hr rating of burners:** NA

List the primary fuel type(s) and if applicable, the secondary fuel type(s). For each fuel type listed, provide the maximum hourly and annual fuel usage for each.
NA

Describe each fuel expected to be used during the term of the permit.

Fuel Type	Max. Sulfur Content	Max. Ash Content	BTU Value
NA	NA	NA	NA

Emissions Data		
Criteria Pollutants	Potential Emissions	
	PPH	TPY
Carbon Monoxide (CO)	NA	NA
Nitrogen Oxides (NO_X)	NA	NA
Lead (Pb)	NA	NA
Particulate Matter ($PM_{2.5}$)	NA	NA
Particulate Matter (PM_{10})	0.0011	<0.001
Total Particulate Matter (TSP)	0.0011	<0.001
Sulfur Dioxide (SO_2)	NA	NA
Volatile Organic Compounds (VOC)	NA	NA
Hazardous Air Pollutants	Potential Emissions	
	PPH	TPY
NA	NA	NA
Regulated Pollutants other than Criteria and HAP	Potential Emissions	
	PPH	TPY
NA	NA	NA

List the method(s) used to calculate the potential emissions (include dates of any stack tests conducted, versions of software used, source and dates of emission factors, etc.).

Engineering Estimate

Applicable Requirements
List all applicable requirements for this emission unit. For each applicable requirement, include the underlying rule/regulation citation and/or construction permit with the condition number. (*Note: Title V permit condition numbers alone are not the underlying applicable requirements*). If an emission limit is calculated based on the type of source and design capacity or if a standard is based on a design parameter, this information should also be included. NA
X Permit Shield
For all applicable requirements listed above, provide monitoring/testing/recordkeeping/reporting which shall be used to demonstrate compliance. If the method is based on a permit or rule, include the condition number or citation. (Note: Each requirement listed above must have an associated method of demonstrating compliance. If there is not already a required method in place, then a method must be proposed.) NA
Are you in compliance with all applicable requirements for this emission unit? X Yes ___No If no, complete the **Schedule of Compliance Form** as **ATTACHMENT F**.

ATTACHMENT E - Emission Unit Form

Emission Unit Description

Emission unit ID number:	**Emission unit name:**	**List any control devices associated with this emission unit:**
C3E-F-5440	CSS-11 Verification Bin	C3E-M-5590

Provide a description of the emission unit (type, method of operation, design parameters, etc.):
CSS-10 Verification Bin

Manufacturer:	**Model number:**	**Serial number:**
NA	NA	NA
Construction date:	**Installation date:**	**Modification date(s):**
NA	1994	NA

Design Capacity (examples: furnaces - tons/hr, tanks - gallons):
1,450 ft^3

Maximum Hourly Throughput:	**Maximum Annual Throughput:**	**Maximum Operating Schedule:**
18,000 lb/hr	78,840 tpy	8,760 hr/yr

Fuel Usage Data **(fill out all applicable fields)**

Does this emission unit combust fuel? ___ Yes X No	**If yes, is it?** ___ Indirect Fired ___Direct Fired
Maximum design heat input and/or maximum horsepower rating: NA	**Type and Btu/hr rating of burners:** NA

List the primary fuel type(s) and if applicable, the secondary fuel type(s). For each fuel type listed, provide the maximum hourly and annual fuel usage for each.
NA

Describe each fuel expected to be used during the term of the permit.

Fuel Type	Max. Sulfur Content	Max. Ash Content	BTU Value
NA	NA	NA	NA

Emissions Data		
Criteria Pollutants	Potential Emissions	
	PPH	TPY
Carbon Monoxide (CO)	NA	NA
Nitrogen Oxides (NO_X)	NA	NA
Lead (Pb)	NA	NA
Particulate Matter ($PM_{2.5}$)	NA	NA
Particulate Matter (PM_{10})	0.001	0.005
Total Particulate Matter (TSP)	0.001	0.005
Sulfur Dioxide (SO_2)	NA	NA
Volatile Organic Compounds (VOC)	NA	NA
Hazardous Air Pollutants	Potential Emissions	
	PPH	TPY
NA	NA	NA
Regulated Pollutants other than Criteria and HAP	Potential Emissions	
	PPH	TPY
NA	NA	NA

List the method(s) used to calculate the potential emissions (include dates of any stack tests conducted, versions of software used, source and dates of emission factors, etc.).

Engineering Estimate

Applicable Requirements
List all applicable requirements for this emission unit. For each applicable requirement, include the underlying rule/regulation citation and/or construction permit with the condition number. (*Note: Title V permit condition numbers alone are not the underlying applicable requirements*). If an emission limit is calculated based on the type of source and design capacity or if a standard is based on a design parameter, this information should also be included. NA
X Permit Shield
For all applicable requirements listed above, provide monitoring/testing/recordkeeping/reporting which shall be used to demonstrate compliance. If the method is based on a permit or rule, include the condition number or citation. (Note: Each requirement listed above must have an associated method of demonstrating compliance. If there is not already a required method in place, then a method must be proposed.) NA
Are you in compliance with all applicable requirements for this emission unit? X Yes ___No If no, complete the **Schedule of Compliance Form** as **ATTACHMENT F**.

ATTACHMENT E - Emission Unit Form

Emission Unit Description

Emission unit ID number:	**Emission unit name:**	**List any control devices associated with this emission unit:**
C3A-E-7240	CSS-11 Crystallizer & Heater	C3A-M-7350

Provide a description of the emission unit (type, method of operation, design parameters, etc.):
CSS-11 Crystallizer & Heater

Manufacturer:	**Model number:**	**Serial number:**
NA	NA	NA
Construction date:	**Installation date:**	**Modification date(s):**
NA	1994	NA

Design Capacity (examples: furnaces - tons/hr, tanks - gallons):
1.54 mmBtu/hr

Maximum Hourly Throughput:	**Maximum Annual Throughput:**	**Maximum Operating Schedule:**
18,000 lb/hr	78,840 tpy	8,760 hr/yr

Fuel Usage Data **(fill out all applicable fields)**

Does this emission unit combust fuel? X Yes ___ No	**If yes, is it?** X Indirect Fired ___Direct Fired
Maximum design heat input and/or maximum horsepower rating: 1.54 mmBtu/hr	**Type and Btu/hr rating of burners:** 1.54 mmBtu/hr

List the primary fuel type(s) and if applicable, the secondary fuel type(s). For each fuel type listed, provide the maximum hourly and annual fuel usage for each.
Natural Gas – 1,604 scf/hr; 14.1 mmscf/yr

Describe each fuel expected to be used during the term of the permit.

Fuel Type	Max. Sulfur Content	Max. Ash Content	BTU Value
Natural	0.01 wt%	NA	960 Btu/scf

Emissions Data		
Criteria Pollutants	Potential Emissions	
	PPH	TPY
Carbon Monoxide (CO)	0.02	0.09
Nitrogen Oxides (NO_X)	0.08	0.35
Lead (Pb)	NA	NA
Particulate Matter ($PM_{2.5}$)	NA	NA
Particulate Matter (PM_{10})	0.034	0.15
Total Particulate Matter (TSP)	0.034	0.15
Sulfur Dioxide (SO_2)	0.001	0.004
Volatile Organic Compounds (VOC)	0.37	1.62
Hazardous Air Pollutants	Potential Emissions	
	PPH	TPY
Ethylene Glycol	0.30	1.31
Acetaldehyde	0.06	0.26
Regulated Pollutants other than Criteria and HAP	Potential Emissions	
	PPH	TPY
NA	NA	NA

List the method(s) used to calculate the potential emissions (include dates of any stack tests conducted, versions of software used, source and dates of emission factors, etc.).

Engineering Estimate

Applicable Requirements
List all applicable requirements for this emission unit. For each applicable requirement, include the underlying rule/regulation citation and/or construction permit with the condition number. (*Note: Title V permit condition numbers alone are not the underlying applicable requirements*). If an emission limit is calculated based on the type of source and design capacity or if a standard is based on a design parameter, this information should also be included. NA
X Permit Shield
For all applicable requirements listed above, provide monitoring/testing/recordkeeping/reporting which shall be used to demonstrate compliance. If the method is based on a permit or rule, include the condition number or citation. (Note: Each requirement listed above must have an associated method of demonstrating compliance. If there is not already a required method in place, then a method must be proposed.) NA
Are you in compliance with all applicable requirements for this emission unit? X Yes ___No If no, complete the **Schedule of Compliance Form** as **ATTACHMENT F**.

ATTACHMENT E - Emission Unit Form

Emission Unit Description

Emission unit ID number:	**Emission unit name:**	**List any control devices associated with this emission unit:**
C3A-F-5410	CSS-11 Crystallizer Blending Silo	C3A-M-6340

Provide a description of the emission unit (type, method of operation, design parameters, etc.):
CSS-11 Crystallizer Blending Silo

Manufacturer:	**Model number:**	**Serial number:**
NA	NA	NA
Construction date:	**Installation date:**	**Modification date(s):**
NA	1994	NA

Design Capacity (examples: furnaces - tons/hr, tanks - gallons):
3,500 ft^3

Maximum Hourly Throughput:	**Maximum Annual Throughput:**	**Maximum Operating Schedule:**
18,000 lb/hr	78,840 tpy	8,760 hr/yr

Fuel Usage Data **(fill out all applicable fields)**

Does this emission unit combust fuel? ___Yes _X_ No	**If yes, is it?** ___ Indirect Fired ___Direct Fired
Maximum design heat input and/or maximum horsepower rating: NA	**Type and Btu/hr rating of burners:** NA

List the primary fuel type(s) and if applicable, the secondary fuel type(s). For each fuel type listed, provide the maximum hourly and annual fuel usage for each.
NA

Describe each fuel expected to be used during the term of the permit.

Fuel Type	Max. Sulfur Content	Max. Ash Content	BTU Value
NA	NA	NA	NA

Emissions Data		
Criteria Pollutants	Potential Emissions	
	PPH	TPY
Carbon Monoxide (CO)	NA	NA
Nitrogen Oxides (NO_X)	NA	NA
Lead (Pb)	NA	NA
Particulate Matter ($PM_{2.5}$)	NA	NA
Particulate Matter (PM_{10})	0.004	0.002
Total Particulate Matter (TSP)	0.004	0.002
Sulfur Dioxide (SO_2)	NA	NA
Volatile Organic Compounds (VOC)	NA	NA
Hazardous Air Pollutants	Potential Emissions	
	PPH	TPY
NA	NA	NA
Regulated Pollutants other than Criteria and HAP	Potential Emissions	
	PPH	TPY
NA	NA	NA

List the method(s) used to calculate the potential emissions (include dates of any stack tests conducted, versions of software used, source and dates of emission factors, etc.).

Engineering Estimate

Applicable Requirements
List all applicable requirements for this emission unit. For each applicable requirement, include the underlying rule/regulation citation and/or <u>construction permit</u> with the condition number. (*Note: Title V permit condition numbers alone are not the underlying applicable requirements*). If an emission limit is calculated based on the type of source and design capacity or if a standard is based on a design parameter, this information should also be included. **R13-1650K §4.1.13; 45CSR §7-3.7:** • Storage structure required to have full enclosure and equipped with PM control devices.
<u>X</u> Permit Shield
For all applicable requirements listed above, provide monitoring/testing/recordkeeping/reporting which shall be used to demonstrate compliance. If the method is based on a permit or rule, include the condition number or citation. (Note: Each requirement listed above must have an associated method of demonstrating compliance. If there is not already a required method in place, then a method must be proposed.) NA
Are you in compliance with all applicable requirements for this emission unit? <u>X</u> Yes ___No If no, complete the **Schedule of Compliance Form** as **ATTACHMENT F**.

ATTACHMENT E - Emission Unit Form

Emission Unit Description

Emission unit ID number:	**Emission unit name:**	**List any control devices associated with this emission unit:**
C3A-F-5460	CSS-11 Crystallizer Surge Bin	C3A-M-6390

Provide a description of the emission unit (type, method of operation, design parameters, etc.):
CSS-11 Crystallizer Surge Bin

Manufacturer:	**Model number:**	**Serial number:**
NA	NA	NA
Construction date:	**Installation date:**	**Modification date(s):**
NA	1994	NA

Design Capacity (examples: furnaces - tons/hr, tanks - gallons):
1,244 ft^3

Maximum Hourly Throughput:	**Maximum Annual Throughput:**	**Maximum Operating Schedule:**
18,000 lb/hr	78,840 tpy	8,760 hr/yr

Fuel Usage Data **(fill out all applicable fields)**

Does this emission unit combust fuel? ___Yes _X_ No	**If yes, is it?** ___ Indirect Fired ___Direct Fired
Maximum design heat input and/or maximum horsepower rating: NA	**Type and Btu/hr rating of burners:** NA

List the primary fuel type(s) and if applicable, the secondary fuel type(s). For each fuel type listed, provide the maximum hourly and annual fuel usage for each.
NA

Describe each fuel expected to be used during the term of the permit.

Fuel Type	Max. Sulfur Content	Max. Ash Content	BTU Value
NA	NA	NA	NA

Emissions Data		
Criteria Pollutants	Potential Emissions	
	PPH	TPY
Carbon Monoxide (CO)	NA	NA
Nitrogen Oxides (NO_X)	NA	NA
Lead (Pb)	NA	NA
Particulate Matter ($PM_{2.5}$)	NA	NA
Particulate Matter (PM_{10})	0.001	0.005
Total Particulate Matter (TSP)	0.001	0.005
Sulfur Dioxide (SO_2)	NA	NA
Volatile Organic Compounds (VOC)	NA	NA
Hazardous Air Pollutants	Potential Emissions	
	PPH	TPY
NA	NA	NA
Regulated Pollutants other than Criteria and HAP	Potential Emissions	
	PPH	TPY
NA	NA	NA

List the method(s) used to calculate the potential emissions (include dates of any stack tests conducted, versions of software used, source and dates of emission factors, etc.).

Engineering Estimate

Applicable Requirements
List all applicable requirements for this emission unit. For each applicable requirement, include the underlying rule/regulation citation and/or construction permit with the condition number. (*Note: Title V permit condition numbers alone are not the underlying applicable requirements*). If an emission limit is calculated based on the type of source and design capacity or if a standard is based on a design parameter, this information should also be included. NA
X Permit Shield
For all applicable requirements listed above, provide monitoring/testing/recordkeeping/reporting which shall be used to demonstrate compliance. If the method is based on a permit or rule, include the condition number or citation. (Note: Each requirement listed above must have an associated method of demonstrating compliance. If there is not already a required method in place, then a method must be proposed.) NA
Are you in compliance with all applicable requirements for this emission unit? X Yes ___No If no, complete the **Schedule of Compliance Form** as **ATTACHMENT F**.

ATTACHMENT E - Emission Unit Form

Emission Unit Description

Emission unit ID number:	**Emission unit name:**	**List any control devices associated with this emission unit:**
L3B-M-2080	CSS-11Fines Elutriator	NA

Provide a description of the emission unit (type, method of operation, design parameters, etc.):
CSS-11 Fines Elutriator

Manufacturer:	**Model number:**	**Serial number:**
NA	NA	NA
Construction date:	**Installation date:**	**Modification date(s):**
NA	1994	NA

Design Capacity (examples: furnaces - tons/hr, tanks - gallons):
150 ft^2

Maximum Hourly Throughput:	**Maximum Annual Throughput:**	**Maximum Operating Schedule:**
18,000 lb/hr	78,840 tpy	8,760 hr/yr

Fuel Usage Data **(fill out all applicable fields)**

Does this emission unit combust fuel? ___ Yes X No	**If yes, is it?** ___ Indirect Fired ___Direct Fired
Maximum design heat input and/or maximum horsepower rating: NA	**Type and Btu/hr rating of burners:** NA

List the primary fuel type(s) and if applicable, the secondary fuel type(s). For each fuel type listed, provide the maximum hourly and annual fuel usage for each.
NA

Describe each fuel expected to be used during the term of the permit.

Fuel Type	Max. Sulfur Content	Max. Ash Content	BTU Value
NA	NA	NA	NA

Emissions Data		
Criteria Pollutants	Potential Emissions	
	PPH	TPY
Carbon Monoxide (CO)	NA	NA
Nitrogen Oxides (NO_X)	NA	NA
Lead (Pb)	NA	NA
Particulate Matter ($PM_{2.5}$)	NA	NA
Particulate Matter (PM_{10})	0.001	0.004
Total Particulate Matter (TSP)	0.001	0.004
Sulfur Dioxide (SO_2)	NA	NA
Volatile Organic Compounds (VOC)	NA	NA
Hazardous Air Pollutants	Potential Emissions	
	PPH	TPY
NA	NA	NA
Regulated Pollutants other than Criteria and HAP	Potential Emissions	
	PPH	TPY
NA	NA	NA

List the method(s) used to calculate the potential emissions (include dates of any stack tests conducted, versions of software used, source and dates of emission factors, etc.).

Engineering Estimate

Applicable Requirements
List all applicable requirements for this emission unit. For each applicable requirement, include the underlying rule/regulation citation and/or construction permit with the condition number. (*Note: Title V permit condition numbers alone are not the underlying applicable requirements*). If an emission limit is calculated based on the type of source and design capacity or if a standard is based on a design parameter, this information should also be included. NA
X Permit Shield
For all applicable requirements listed above, provide monitoring/testing/recordkeeping/reporting which shall be used to demonstrate compliance. If the method is based on a permit or rule, include the condition number or citation. (Note: Each requirement listed above must have an associated method of demonstrating compliance. If there is not already a required method in place, then a method must be proposed.) NA
Are you in compliance with all applicable requirements for this emission unit? X Yes ___No If no, complete the **Schedule of Compliance Form** as **ATTACHMENT F**.

ATTACHMENT E - Emission Unit Form

Emission Unit Description

Emission unit ID number:	**Emission unit name:**	**List any control devices associated with this emission unit:**
L1B-M-2170	CSS-11 Fines Elutriator	NA

Provide a description of the emission unit (type, method of operation, design parameters, etc.):
CSS-11 Fines Elutriator

Manufacturer:	**Model number:**	**Serial number:**
NA	NA	NA
Construction date:	**Installation date:**	**Modification date(s):**
NA	1994	NA

Design Capacity (examples: furnaces - tons/hr, tanks - gallons):
150 ft^2

Maximum Hourly Throughput:	**Maximum Annual Throughput:**	**Maximum Operating Schedule:**
18,000 lb/hr	78,840 tpy	8,760 hr/yr

Fuel Usage Data **(fill out all applicable fields)**

Does this emission unit combust fuel? ___ Yes X No	**If yes, is it?** ___ Indirect Fired ___Direct Fired
Maximum design heat input and/or maximum horsepower rating: NA	**Type and Btu/hr rating of burners:** NA

List the primary fuel type(s) and if applicable, the secondary fuel type(s). For each fuel type listed, provide the maximum hourly and annual fuel usage for each.
NA

Describe each fuel expected to be used during the term of the permit.

Fuel Type	Max. Sulfur Content	Max. Ash Content	BTU Value
NA	NA	NA	NA

Emissions Data		
Criteria Pollutants	Potential Emissions	
	PPH	TPY
Carbon Monoxide (CO)	NA	NA
Nitrogen Oxides (NO_X)	NA	NA
Lead (Pb)	NA	NA
Particulate Matter ($PM_{2.5}$)	NA	NA
Particulate Matter (PM_{10})	0.001	0.004
Total Particulate Matter (TSP)	0.001	0.004
Sulfur Dioxide (SO_2)	NA	NA
Volatile Organic Compounds (VOC)	NA	NA
Hazardous Air Pollutants	Potential Emissions	
	PPH	TPY
NA	NA	NA
Regulated Pollutants other than Criteria and HAP	Potential Emissions	
	PPH	TPY
NA	NA	NA

List the method(s) used to calculate the potential emissions (include dates of any stack tests conducted, versions of software used, source and dates of emission factors, etc.).

Engineering Estimate

Applicable Requirements
List all applicable requirements for this emission unit. For each applicable requirement, include the underlying rule/regulation citation and/or construction permit with the condition number. (*Note: Title V permit condition numbers alone are not the underlying applicable requirements*). If an emission limit is calculated based on the type of source and design capacity or if a standard is based on a design parameter, this information should also be included. NA
X Permit Shield
For all applicable requirements listed above, provide monitoring/testing/recordkeeping/reporting which shall be used to demonstrate compliance. If the method is based on a permit or rule, include the condition number or citation. (Note: Each requirement listed above must have an associated method of demonstrating compliance. If there is not already a required method in place, then a method must be proposed.) NA
Are you in compliance with all applicable requirements for this emission unit? X Yes ___No If no, complete the **Schedule of Compliance Form** as **ATTACHMENT F**.

ATTACHMENT E - Emission Unit Form

Emission Unit Description

Emission unit ID number:	**Emission unit name:**	**List any control devices associated with this emission unit:**
C3B-E-6250	CSS-11 Preheater & Heater	C3B-M-6420

Provide a description of the emission unit (type, method of operation, design parameters, etc.):
CSS-11 Preheater & Heater

Manufacturer:	**Model number:**	**Serial number:**
NA	NA	NA
Construction date:	**Installation date:**	**Modification date(s):**
NA	1994	NA

Design Capacity (examples: furnaces - tons/hr, tanks - gallons):
0.66 mmBtu/hr

Maximum Hourly Throughput:	**Maximum Annual Throughput:**	**Maximum Operating Schedule:**
18,000 lb/hr	78,840 tpy	8,760 hr/yr

Fuel Usage Data **(fill out all applicable fields)**

Does this emission unit combust fuel? X Yes ___ No	**If yes, is it?** X Indirect Fired ___Direct Fired
Maximum design heat input and/or maximum horsepower rating: 0.66 mmBtu/hr	**Type and Btu/hr rating of burners:** 0.66 mmBtu/hr

List the primary fuel type(s) and if applicable, the secondary fuel type(s). For each fuel type listed, provide the maximum hourly and annual fuel usage for each.
Natural Gas – 688 scf/hr; 6.03 mmscf/yr

Describe each fuel expected to be used during the term of the permit.

Fuel Type	Max. Sulfur Content	Max. Ash Content	BTU Value
Natural	0.01 wt%	NA	960 Btu/scf

Emissions Data		
Criteria Pollutants	Potential Emissions	
	PPH	TPY
Carbon Monoxide (CO)	0.007	0.03
Nitrogen Oxides (NO_X)	0.04	0.18
Lead (Pb)	NA	NA
Particulate Matter ($PM_{2.5}$)	NA	NA
Particulate Matter (PM_{10})	0.002	0.01
Total Particulate Matter (TSP)	0.002	0.01
Sulfur Dioxide (SO_2)	0.001	0.004
Volatile Organic Compounds (VOC)	0.23	1.01
Hazardous Air Pollutants	Potential Emissions	
	PPH	TPY
Ethylene Glycol	0.08	0.35
Acetaldehyde	0.13	0.57
Regulated Pollutants other than Criteria and HAP	Potential Emissions	
	PPH	TPY
NA	NA	NA

List the method(s) used to calculate the potential emissions (include dates of any stack tests conducted, versions of software used, source and dates of emission factors, etc.).

Engineering Estimate

Applicable Requirements
List all applicable requirements for this emission unit. For each applicable requirement, include the underlying rule/regulation citation and/or construction permit with the condition number. (*Note: Title V permit condition numbers alone are not the underlying applicable requirements*). If an emission limit is calculated based on the type of source and design capacity or if a standard is based on a design parameter, this information should also be included. NA
X Permit Shield
For all applicable requirements listed above, provide monitoring/testing/recordkeeping/reporting which shall be used to demonstrate compliance. If the method is based on a permit or rule, include the condition number or citation. (Note: Each requirement listed above must have an associated method of demonstrating compliance. If there is not already a required method in place, then a method must be proposed.) NA
Are you in compliance with all applicable requirements for this emission unit? X Yes ___No If no, complete the **Schedule of Compliance Form** as **ATTACHMENT F**.

ATTACHMENT E - Emission Unit Form

Emission Unit Description

Emission unit ID number:	**Emission unit name:**	**List any control devices associated with this emission unit:**
C3B-F-5420	CSS-11 Preheater Surge Bin	C3B-M-5430 and C3T-B-1600

Provide a description of the emission unit (type, method of operation, design parameters, etc.):
CSS-11 Preheater Surge Bin

Manufacturer:	**Model number:**	**Serial number:**
NA	NA	NA
Construction date:	**Installation date:**	**Modification date(s):**
NA	1994	NA

Design Capacity (examples: furnaces - tons/hr, tanks - gallons):
785 ft^3

Maximum Hourly Throughput:	**Maximum Annual Throughput:**	**Maximum Operating Schedule:**
18,000 lb/hr	78,840 tpy	8,760 hr/yr

Fuel Usage Data **(fill out all applicable fields)**

Does this emission unit combust fuel? ___ Yes X No	**If yes, is it?** ___ Indirect Fired ___Direct Fired
Maximum design heat input and/or maximum horsepower rating: NA	**Type and Btu/hr rating of burners:** NA

List the primary fuel type(s) and if applicable, the secondary fuel type(s). For each fuel type listed, provide the maximum hourly and annual fuel usage for each.
NA

Describe each fuel expected to be used during the term of the permit.

Fuel Type	Max. Sulfur Content	Max. Ash Content	BTU Value
NA	NA	NA	NA

Emissions Data		
Criteria Pollutants	Potential Emissions	
	PPH	TPY
Carbon Monoxide (CO)	See Emissions from Hot Oil Heater C3T-B-1600.	
Nitrogen Oxides (NO_X)		
Lead (Pb)		
Particulate Matter ($PM_{2.5}$)		
Particulate Matter (PM_{10})		
Total Particulate Matter (TSP)		
Sulfur Dioxide (SO_2)		
Volatile Organic Compounds (VOC)		
Hazardous Air Pollutants	Potential Emissions	
	PPH	TPY
See Emission from Hot Oil Heater C3T-B-1600.		
Regulated Pollutants other than Criteria and HAP	Potential Emissions	
	PPH	TPY
NA	NA	NA

List the method(s) used to calculate the potential emissions (include dates of any stack tests conducted, versions of software used, source and dates of emission factors, etc.).

Engineering Estimate

Applicable Requirements
List all applicable requirements for this emission unit. For each applicable requirement, include the underlying rule/regulation citation and/or construction permit with the condition number. (*Note: Title V permit condition numbers alone are not the underlying applicable requirements*). If an emission limit is calculated based on the type of source and design capacity or if a standard is based on a design parameter, this information should also be included. NA
X Permit Shield
For all applicable requirements listed above, provide monitoring/testing/recordkeeping/reporting which shall be used to demonstrate compliance. If the method is based on a permit or rule, include the condition number or citation. (Note: Each requirement listed above must have an associated method of demonstrating compliance. If there is not already a required method in place, then a method must be proposed.) NA
Are you in compliance with all applicable requirements for this emission unit? X Yes ___No If no, complete the **Schedule of Compliance Form** as **ATTACHMENT F**.

ATTACHMENT E - Emission Unit Form

Emission Unit Description

Emission unit ID number:	**Emission unit name:**	**List any control devices associated with this emission unit:**
C3D-E-5280	CSS-11 Product Cooler	C3D-M-0520

Provide a description of the emission unit (type, method of operation, design parameters, etc.):
CSS-11 Product Cooler

Manufacturer:	**Model number:**	**Serial number:**
NA	NA	NA
Construction date:	**Installation date:**	**Modification date(s):**
NA	1994	NA

Design Capacity (examples: furnaces - tons/hr, tanks - gallons):
27.7 ft^2

Maximum Hourly Throughput:	**Maximum Annual Throughput:**	**Maximum Operating Schedule:**
18,000 lb/hr	78,840 tpy	8,760 hr/yr

Fuel Usage Data **(fill out all applicable fields)**

Does this emission unit combust fuel? ___ Yes X No	**If yes, is it?** ___ Indirect Fired ___Direct Fired
Maximum design heat input and/or maximum horsepower rating: NA	**Type and Btu/hr rating of burners:** NA

List the primary fuel type(s) and if applicable, the secondary fuel type(s). For each fuel type listed, provide the maximum hourly and annual fuel usage for each.
NA

Describe each fuel expected to be used during the term of the permit.

Fuel Type	Max. Sulfur Content	Max. Ash Content	BTU Value
NA	NA	NA	NA

Emissions Data		
Criteria Pollutants	Potential Emissions	
	PPH	TPY
Carbon Monoxide (CO)	NA	NA
Nitrogen Oxides (NO_X)	NA	NA
Lead (Pb)	NA	NA
Particulate Matter ($PM_{2.5}$)	NA	NA
Particulate Matter (PM_{10})	Emissions included with CSS-10 Product Cooler C3D-E-1280.	
Total Particulate Matter (TSP)	Emissions included with CSS-10 Product Cooler C3D-E-1280.	
Sulfur Dioxide (SO_2)	NA	NA
Volatile Organic Compounds (VOC)	0.19	0.80
Hazardous Air Pollutants	Potential Emissions	
	PPH	TPY
Ethylene Glycol	Emissions included with CSS-10 Product Cooler C3D-E-1280.	
Acetaldehyde	Emissions included with CSS-10 Product Cooler C3D-E-1280.	
Regulated Pollutants other than Criteria and HAP	Potential Emissions	
	PPH	TPY
NA	NA	NA

List the method(s) used to calculate the potential emissions (include dates of any stack tests conducted, versions of software used, source and dates of emission factors, etc.).

Engineering Estimate

Applicable Requirements
List all applicable requirements for this emission unit. For each applicable requirement, include the underlying rule/regulation citation and/or construction permit with the condition number. (*Note: Title V permit condition numbers alone are not the underlying applicable requirements*). If an emission limit is calculated based on the type of source and design capacity or if a standard is based on a design parameter, this information should also be included. NA
X Permit Shield
For all applicable requirements listed above, provide monitoring/testing/recordkeeping/reporting which shall be used to demonstrate compliance. If the method is based on a permit or rule, include the condition number or citation. (Note: Each requirement listed above must have an associated method of demonstrating compliance. If there is not already a required method in place, then a method must be proposed.) NA
Are you in compliance with all applicable requirements for this emission unit? X Yes ___No If no, complete the **Schedule of Compliance Form** as **ATTACHMENT F**.

ATTACHMENT E - Emission Unit Form

Emission Unit Description

Emission unit ID number:	**Emission unit name:**	**List any control devices associated with this emission unit:**
L1B-F-2115	CSS-11 Product Silo	L1B-M-1160

Provide a description of the emission unit (type, method of operation, design parameters, etc.):
CSS-11 Product Silo

Manufacturer:	**Model number:**	**Serial number:**
NA	NA	NA
Construction date:	**Installation date:**	**Modification date(s):**
NA	1994	NA

Design Capacity (examples: furnaces - tons/hr, tanks - gallons):
4,000 ft^3

Maximum Hourly Throughput:	**Maximum Annual Throughput:**	**Maximum Operating Schedule:**
18,000 lb/hr	78,840 tpy	8,760 hr/yr

Fuel Usage Data **(fill out all applicable fields)**

Does this emission unit combust fuel? ___ Yes X No	**If yes, is it?** ___ Indirect Fired ___Direct Fired
Maximum design heat input and/or maximum horsepower rating: NA	**Type and Btu/hr rating of burners:** NA

List the primary fuel type(s) and if applicable, the secondary fuel type(s). For each fuel type listed, provide the maximum hourly and annual fuel usage for each.
NA

Describe each fuel expected to be used during the term of the permit.

Fuel Type	Max. Sulfur Content	Max. Ash Content	BTU Value
NA	NA	NA	NA

Emissions Data		
Criteria Pollutants	Potential Emissions	
	PPH	TPY
Carbon Monoxide (CO)	NA	NA
Nitrogen Oxides (NO_X)	NA	NA
Lead (Pb)	NA	NA
Particulate Matter ($PM_{2.5}$)	NA	NA
Particulate Matter (PM_{10})	0.003	0.001
Total Particulate Matter (TSP)	0.003	0.001
Sulfur Dioxide (SO_2)	NA	NA
Volatile Organic Compounds (VOC)	NA	NA
Hazardous Air Pollutants	Potential Emissions	
	PPH	TPY
NA	NA	NA
Regulated Pollutants other than Criteria and HAP	Potential Emissions	
	PPH	TPY
NA	NA	NA

List the method(s) used to calculate the potential emissions (include dates of any stack tests conducted, versions of software used, source and dates of emission factors, etc.).

Engineering Estimate

Applicable Requirements
List all applicable requirements for this emission unit. For each applicable requirement, include the underlying rule/regulation citation and/or <u>construction permit</u> with the condition number. (*Note: Title V permit condition numbers alone are not the underlying applicable requirements*). If an emission limit is calculated based on the type of source and design capacity or if a standard is based on a design parameter, this information should also be included. **R13-1650K §4.1.13; 45CSR §7-3.7:** • Storage structure required to have full enclosure and equipped with PM control devices.
<u>X</u> Permit Shield
For all applicable requirements listed above, provide monitoring/testing/recordkeeping/reporting which shall be used to demonstrate compliance. If the method is based on a permit or rule, include the condition number or citation. (Note: Each requirement listed above must have an associated method of demonstrating compliance. If there is not already a required method in place, then a method must be proposed.) NA
Are you in compliance with all applicable requirements for this emission unit? <u>X</u> Yes ___No If no, complete the **Schedule of Compliance Form** as **ATTACHMENT F**.

ATTACHMENT E - Emission Unit Form

Emission Unit Description

Emission unit ID number:	**Emission unit name:**	**List any control devices associated with this emission unit:**
L1B-F-2160	CSS-11 Product Silo	L1B-M-1160

Provide a description of the emission unit (type, method of operation, design parameters, etc.):
CSS-11 Product Silo

Manufacturer:	**Model number:**	**Serial number:**
NA	NA	NA
Construction date:	**Installation date:**	**Modification date(s):**
NA	1994	NA

Design Capacity (examples: furnaces - tons/hr, tanks - gallons):
4,000 ft^3

Maximum Hourly Throughput:	**Maximum Annual Throughput:**	**Maximum Operating Schedule:**
18,000 lb/hr	78,840 tpy	8,760 hr/yr

Fuel Usage Data **(fill out all applicable fields)**

Does this emission unit combust fuel? ___ Yes X No	**If yes, is it?** ___ Indirect Fired ___Direct Fired
Maximum design heat input and/or maximum horsepower rating: NA	**Type and Btu/hr rating of burners:** NA

List the primary fuel type(s) and if applicable, the secondary fuel type(s). For each fuel type listed, provide the maximum hourly and annual fuel usage for each.
NA

Describe each fuel expected to be used during the term of the permit.

Fuel Type	Max. Sulfur Content	Max. Ash Content	BTU Value
NA	NA	NA	NA

Emissions Data		
Criteria Pollutants	Potential Emissions	
	PPH	TPY
Carbon Monoxide (CO)	NA	NA
Nitrogen Oxides (NO_X)	NA	NA
Lead (Pb)	NA	NA
Particulate Matter ($PM_{2.5}$)	NA	NA
Particulate Matter (PM_{10})	Included with Silo L1B-F-2115.	Included with Silo L1B-F-2115.
Total Particulate Matter (TSP)	Included with Silo L1B-F-2115.	Included with Silo L1B-F-2115.
Sulfur Dioxide (SO_2)	NA	NA
Volatile Organic Compounds (VOC)	NA	NA
Hazardous Air Pollutants	Potential Emissions	
	PPH	TPY
NA	NA	NA
Regulated Pollutants other than Criteria and HAP	Potential Emissions	
	PPH	TPY
NA	NA	NA

List the method(s) used to calculate the potential emissions (include dates of any stack tests conducted, versions of software used, source and dates of emission factors, etc.).

Engineering Estimate

Applicable Requirements
List all applicable requirements for this emission unit. For each applicable requirement, include the underlying rule/regulation citation and/or <u>construction permit</u> with the condition number. (*Note: Title V permit condition numbers alone are not the underlying applicable requirements*). If an emission limit is calculated based on the type of source and design capacity or if a standard is based on a design parameter, this information should also be included. **R13-1650K §4.1.13; 45CSR §7-3.7:** • Storage structure required to have full enclosure and equipped with PM control devices.
<u>X</u> Permit Shield
For all applicable requirements listed above, provide monitoring/testing/recordkeeping/reporting which shall be used to demonstrate compliance. If the method is based on a permit or rule, include the condition number or citation. (Note: Each requirement listed above must have an associated method of demonstrating compliance. If there is not already a required method in place, then a method must be proposed.) NA
Are you in compliance with all applicable requirements for this emission unit? <u>X</u> Yes ___No If no, complete the **Schedule of Compliance Form** as **ATTACHMENT F**.

ATTACHMENT E - Emission Unit Form

Emission Unit Description

Emission unit ID number:	**Emission unit name:**	**List any control devices associated with this emission unit:**
C3C-R-5060	CSS-11 R/6 Reactor	C3T-B-1600

Provide a description of the emission unit (type, method of operation, design parameters, etc.):
CSS-11 R/6 Reactor

Manufacturer:	**Model number:**	**Serial number:**
NA	NA	NA
Construction date:	**Installation date:**	**Modification date(s):**
NA	1994	NA

Design Capacity (examples: furnaces - tons/hr, tanks - gallons):
2,404 ft^3

Maximum Hourly Throughput:	**Maximum Annual Throughput:**	**Maximum Operating Schedule:**
18,000 lb/hr	78,840 tpy	8,760 hr/yr

Fuel Usage Data **(fill out all applicable fields)**

Does this emission unit combust fuel? ___ Yes X No	**If yes, is it?** ___ Indirect Fired ___Direct Fired
Maximum design heat input and/or maximum horsepower rating: NA	**Type and Btu/hr rating of burners:** NA

List the primary fuel type(s) and if applicable, the secondary fuel type(s). For each fuel type listed, provide the maximum hourly and annual fuel usage for each.
NA

Describe each fuel expected to be used during the term of the permit.

Fuel Type	Max. Sulfur Content	Max. Ash Content	BTU Value
NA	NA	NA	NA

Emissions Data		
Criteria Pollutants	Potential Emissions	
	PPH	TPY
Carbon Monoxide (CO)	See Emissions from Hot Oil Heater C3T-B-1600.	
Nitrogen Oxides (NO_X)		
Lead (Pb)		
Particulate Matter ($PM_{2.5}$)		
Particulate Matter (PM_{10})		
Total Particulate Matter (TSP)		
Sulfur Dioxide (SO_2)		
Volatile Organic Compounds (VOC)		
Hazardous Air Pollutants	Potential Emissions	
	PPH	TPY
See Emission from Hot Oil Heater C3T-B-1600.		
Regulated Pollutants other than Criteria and HAP	Potential Emissions	
	PPH	TPY
NA	NA	NA

List the method(s) used to calculate the potential emissions (include dates of any stack tests conducted, versions of software used, source and dates of emission factors, etc.).

Engineering Estimate

Applicable Requirements
List all applicable requirements for this emission unit. For each applicable requirement, include the underlying rule/regulation citation and/or construction permit with the condition number. (*Note: Title V permit condition numbers alone are not the underlying applicable requirements*). If an emission limit is calculated based on the type of source and design capacity or if a standard is based on a design parameter, this information should also be included. NA
X Permit Shield
For all applicable requirements listed above, provide monitoring/testing/recordkeeping/reporting which shall be used to demonstrate compliance. If the method is based on a permit or rule, include the condition number or citation. (Note: Each requirement listed above must have an associated method of demonstrating compliance. If there is not already a required method in place, then a method must be proposed.) NA
Are you in compliance with all applicable requirements for this emission unit? X Yes ___No If no, complete the **Schedule of Compliance Form** as **ATTACHMENT F**.

CSS-12

ATTACHMENT E - Emission Unit Form

Emission Unit Description

Emission unit ID number:	**Emission unit name:**	**List any control devices associated with this emission unit:**
L3B-F-2040	CSS-12 & CSS-13 Boxing & Bagging Blender	L3B-M-2060

Provide a description of the emission unit (type, method of operation, design parameters, etc.):
CSS-12 & CSS-13 Boxing & Bagging Blender

Manufacturer:	**Model number:**	**Serial number:**
NA	NA	NA
Construction date:	**Installation date:**	**Modification date(s):**
NA	1996	NA

Design Capacity (examples: furnaces - tons/hr, tanks - gallons):
1,200 ft^3

Maximum Hourly Throughput:	**Maximum Annual Throughput:**	**Maximum Operating Schedule:**
18,000 lb/hr	NA	8,760 hr/yr

Fuel Usage Data **(fill out all applicable fields)**

Does this emission unit combust fuel? ___Yes _X_ No	**If yes, is it?** ___ Indirect Fired ___Direct Fired
Maximum design heat input and/or maximum horsepower rating: NA	**Type and Btu/hr rating of burners:** NA

List the primary fuel type(s) and if applicable, the secondary fuel type(s). For each fuel type listed, provide the maximum hourly and annual fuel usage for each.
NA

Describe each fuel expected to be used during the term of the permit.

Fuel Type	Max. Sulfur Content	Max. Ash Content	BTU Value
NA	NA	NA	NA

Emissions Data		
Criteria Pollutants	Potential Emissions	
	PPH	TPY
Carbon Monoxide (CO)	NA	NA
Nitrogen Oxides (NO_X)	NA	NA
Lead (Pb)	NA	NA
Particulate Matter ($PM_{2.5}$)	NA	NA
Particulate Matter (PM_{10})	0.003	<0.001
Total Particulate Matter (TSP)	0.003	<0.001
Sulfur Dioxide (SO_2)	NA	NA
Volatile Organic Compounds (VOC)	NA	NA
Hazardous Air Pollutants	Potential Emissions	
	PPH	TPY
NA	NA	NA
NA	NA	NA
Regulated Pollutants other than Criteria and HAP	Potential Emissions	
	PPH	TPY
NA	NA	NA

List the method(s) used to calculate the potential emissions (include dates of any stack tests conducted, versions of software used, source and dates of emission factors, etc.).

Engineering Estimate

Applicable Requirements
List all applicable requirements for this emission unit. For each applicable requirement, include the underlying rule/regulation citation and/or construction permit with the condition number. (*Note: Title V permit condition numbers alone are not the underlying applicable requirements*). If an emission limit is calculated based on the type of source and design capacity or if a standard is based on a design parameter, this information should also be included. NA
X Permit Shield
For all applicable requirements listed above, provide monitoring/testing/recordkeeping/reporting which shall be used to demonstrate compliance. If the method is based on a permit or rule, include the condition number or citation. (Note: Each requirement listed above must have an associated method of demonstrating compliance. If there is not already a required method in place, then a method must be proposed.) NA
Are you in compliance with all applicable requirements for this emission unit? X Yes ___No If no, complete the **Schedule of Compliance Form** as **ATTACHMENT F**.

ATTACHMENT E - Emission Unit Form

Emission Unit Description

Emission unit ID number:	**Emission unit name:**	**List any control devices associated with this emission unit:**
C4E-F-1440	CSS-12 Verification Bin	C4E-M-1590

Provide a description of the emission unit (type, method of operation, design parameters, etc.):
CSS-12 Verification Bin

Manufacturer:	**Model number:**	**Serial number:**
NA	NA	NA
Construction date:	**Installation date:**	**Modification date(s):**
NA	1996	NA

Design Capacity (examples: furnaces - tons/hr, tanks - gallons):
1,450 ft^3

Maximum Hourly Throughput:	**Maximum Annual Throughput:**	**Maximum Operating Schedule:**
18,000 lb/hr	78,840 tpy	8,760 hr/yr

Fuel Usage Data **(fill out all applicable fields)**

Does this emission unit combust fuel? ___Yes _X_ No	**If yes, is it?** ___ Indirect Fired ___Direct Fired
Maximum design heat input and/or maximum horsepower rating: NA	**Type and Btu/hr rating of burners:** NA

List the primary fuel type(s) and if applicable, the secondary fuel type(s). For each fuel type listed, provide the maximum hourly and annual fuel usage for each.
NA

Describe each fuel expected to be used during the term of the permit.

Fuel Type	Max. Sulfur Content	Max. Ash Content	BTU Value
NA	NA	NA	NA

Emissions Data		
Criteria Pollutants	Potential Emissions	
	PPH	TPY
Carbon Monoxide (CO)	NA	NA
Nitrogen Oxides (NO_X)	NA	NA
Lead (Pb)	NA	NA
Particulate Matter ($PM_{2.5}$)	NA	NA
Particulate Matter (PM_{10})	0.001	0.005
Total Particulate Matter (TSP)	0.001	0.005
Sulfur Dioxide (SO_2)	NA	NA
Volatile Organic Compounds (VOC)	NA	NA
Hazardous Air Pollutants	Potential Emissions	
	PPH	TPY
NA	NA	NA
NA	NA	NA
Regulated Pollutants other than Criteria and HAP	Potential Emissions	
	PPH	TPY
NA	NA	NA

List the method(s) used to calculate the potential emissions (include dates of any stack tests conducted, versions of software used, source and dates of emission factors, etc.).

Engineering Estimate

Applicable Requirements
List all applicable requirements for this emission unit. For each applicable requirement, include the underlying rule/regulation citation and/or <u>construction permit</u> with the condition number. (*Note: Title V permit condition numbers alone are not the underlying applicable requirements*). If an emission limit is calculated based on the type of source and design capacity or if a standard is based on a design parameter, this information should also be included. NA
<u>X</u> Permit Shield
For all applicable requirements listed above, provide monitoring/testing/recordkeeping/reporting which shall be used to demonstrate compliance. If the method is based on a permit or rule, include the condition number or citation. (Note: Each requirement listed above must have an associated method of demonstrating compliance. If there is not already a required method in place, then a method must be proposed.) NA
Are you in compliance with all applicable requirements for this emission unit? <u>X</u> Yes ___No If no, complete the **Schedule of Compliance Form** as **ATTACHMENT F**.

ATTACHMENT E - Emission Unit Form

Emission Unit Description

Emission unit ID number:	**Emission unit name:**	**List any control devices associated with this emission unit:**
C4A-E-3240	CSS-12 Crystallizer & Heater	C4A-M-3350

Provide a description of the emission unit (type, method of operation, design parameters, etc.):
CSS-12 Crystallizer & Heater

Manufacturer:	**Model number:**	**Serial number:**
NA	NA	NA
Construction date:	**Installation date:**	**Modification date(s):**
NA	1996	NA

Design Capacity (examples: furnaces - tons/hr, tanks - gallons):
2.04 mmBtu/hr

Maximum Hourly Throughput:	**Maximum Annual Throughput:**	**Maximum Operating Schedule:**
18,000 lb/hr	78,840 tpy	8,760 hr/yr

Fuel Usage Data **(fill out all applicable fields)**

Does this emission unit combust fuel? X Yes ___ No	**If yes, is it?** ___ Indirect Fired X Direct Fired
Maximum design heat input and/or maximum horsepower rating: 2.04 mmBtu/hr	**Type and Btu/hr rating of burners:** 2.04 mmBtu/hr

List the primary fuel type(s) and if applicable, the secondary fuel type(s). For each fuel type listed, provide the maximum hourly and annual fuel usage for each.
Natural Gas - 2,125 SCF/hr, 18.6 mmmSCF/yr

Describe each fuel expected to be used during the term of the permit.

Fuel Type	Max. Sulfur Content	Max. Ash Content	BTU Value
Natural Gas	0.01 wt%	NA	960 Btu/sfc

Emissions Data		
Criteria Pollutants	Potential Emissions	
	PPH	TPY
Carbon Monoxide (CO)	0.02	0.09
Nitrogen Oxides (NO_X)	0.13	0.57
Lead (Pb)	NA	NA
Particulate Matter ($PM_{2.5}$)	NA	NA
Particulate Matter (PM_{10})	0.006	0.03
Total Particulate Matter (TSP)	0.006	0.03
Sulfur Dioxide (SO_2)	0.001	0.004
Volatile Organic Compounds (VOC)	0.37	1.62
Hazardous Air Pollutants	Potential Emissions	
	PPH	TPY
Ethylene Glycol	0.30	1.31
Acetaldehyde	0.06	0.26
Regulated Pollutants other than Criteria and HAP	Potential Emissions	
	PPH	TPY
NA	NA	NA

List the method(s) used to calculate the potential emissions (include dates of any stack tests conducted, versions of software used, source and dates of emission factors, etc.).

Engineering Estimate

Applicable Requirements
List all applicable requirements for this emission unit. For each applicable requirement, include the underlying rule/regulation citation and/or construction permit with the condition number. (*Note: Title V permit condition numbers alone are not the underlying applicable requirements*). If an emission limit is calculated based on the type of source and design capacity or if a standard is based on a design parameter, this information should also be included. NA
X Permit Shield
For all applicable requirements listed above, provide monitoring/testing/recordkeeping/reporting which shall be used to demonstrate compliance. If the method is based on a permit or rule, include the condition number or citation. (Note: Each requirement listed above must have an associated method of demonstrating compliance. If there is not already a required method in place, then a method must be proposed.) NA
Are you in compliance with all applicable requirements for this emission unit? X Yes ___No If no, complete the **Schedule of Compliance Form** as **ATTACHMENT F**.

ATTACHMENT E - Emission Unit Form

Emission Unit Description

Emission unit ID number:	**Emission unit name:**	**List any control devices associated with this emission unit:**
C4A-F-2460	CSS-12 Crystallizer Surge Bin	C4A-M-2390

Provide a description of the emission unit (type, method of operation, design parameters, etc.):
CSS-12 Crystallizer Surge Bin

Manufacturer:	**Model number:**	**Serial number:**
NA	NA	NA
Construction date:	**Installation date:**	**Modification date(s):**
NA	1996	NA

Design Capacity (examples: furnaces - tons/hr, tanks - gallons):
1,570 ft^3

Maximum Hourly Throughput:	**Maximum Annual Throughput:**	**Maximum Operating Schedule:**
18,000 lb/hr	78,840 tpy	8,760 hr/yr

Fuel Usage Data **(fill out all applicable fields)**

Does this emission unit combust fuel? ___Yes _X_ No	**If yes, is it?** ___ Indirect Fired ___Direct Fired
Maximum design heat input and/or maximum horsepower rating: NA	**Type and Btu/hr rating of burners:** NA

List the primary fuel type(s) and if applicable, the secondary fuel type(s). For each fuel type listed, provide the maximum hourly and annual fuel usage for each.
NA

Describe each fuel expected to be used during the term of the permit.

Fuel Type	Max. Sulfur Content	Max. Ash Content	BTU Value
NA	NA	NA	NA

Emissions Data		
Criteria Pollutants	Potential Emissions	
	PPH	TPY
Carbon Monoxide (CO)	NA	NA
Nitrogen Oxides (NO_X)	NA	NA
Lead (Pb)	NA	NA
Particulate Matter ($PM_{2.5}$)	NA	NA
Particulate Matter (PM_{10})	0.002	0.008
Total Particulate Matter (TSP)	0.002	0.008
Sulfur Dioxide (SO_2)	NA	NA
Volatile Organic Compounds (VOC)	NA	NA
Hazardous Air Pollutants	Potential Emissions	
	PPH	TPY
NA	NA	NA
Regulated Pollutants other than Criteria and HAP	Potential Emissions	
	PPH	TPY
NA	NA	NA

List the method(s) used to calculate the potential emissions (include dates of any stack tests conducted, versions of software used, source and dates of emission factors, etc.).

Engineering Estimate

Applicable Requirements
List all applicable requirements for this emission unit. For each applicable requirement, include the underlying rule/regulation citation and/or construction permit with the condition number. (*Note: Title V permit condition numbers alone are not the underlying applicable requirements*). If an emission limit is calculated based on the type of source and design capacity or if a standard is based on a design parameter, this information should also be included. NA
X Permit Shield
For all applicable requirements listed above, provide monitoring/testing/recordkeeping/reporting which shall be used to demonstrate compliance. If the method is based on a permit or rule, include the condition number or citation. (Note: Each requirement listed above must have an associated method of demonstrating compliance. If there is not already a required method in place, then a method must be proposed.) NA
Are you in compliance with all applicable requirements for this emission unit? X Yes ___No If no, complete the **Schedule of Compliance Form** as **ATTACHMENT F**.

ATTACHMENT E - Emission Unit Form

Emission Unit Description

Emission unit ID number:	**Emission unit name:**	**List any control devices associated with this emission unit:**
L1C-M-1140	CSS-12 Fines Elutriator	NA

Provide a description of the emission unit (type, method of operation, design parameters, etc.):
CSS-12 Fines Elutriator

Manufacturer:	**Model number:**	**Serial number:**
NA	NA	NA
Construction date:	**Installation date:**	**Modification date(s):**
NA	1996	NA

Design Capacity (examples: furnaces - tons/hr, tanks - gallons):
1,50 ft^2

Maximum Hourly Throughput:	**Maximum Annual Throughput:**	**Maximum Operating Schedule:**
690 lb/hr	NA	8,760 hr/yr

Fuel Usage Data **(fill out all applicable fields)**

Does this emission unit combust fuel? ___Yes _X_ No	**If yes, is it?** ___ Indirect Fired ___Direct Fired
Maximum design heat input and/or maximum horsepower rating: NA	**Type and Btu/hr rating of burners:** NA

List the primary fuel type(s) and if applicable, the secondary fuel type(s). For each fuel type listed, provide the maximum hourly and annual fuel usage for each.
NA

Describe each fuel expected to be used during the term of the permit.

Fuel Type	Max. Sulfur Content	Max. Ash Content	BTU Value
NA	NA	NA	NA

Emissions Data		
Criteria Pollutants	Potential Emissions	
	PPH	TPY
Carbon Monoxide (CO)	NA	NA
Nitrogen Oxides (NO_X)	NA	NA
Lead (Pb)	NA	NA
Particulate Matter ($PM_{2.5}$)	NA	NA
Particulate Matter (PM_{10})	0.001	0.004
Total Particulate Matter (TSP)	0.001	0.004
Sulfur Dioxide (SO_2)	NA	NA
Volatile Organic Compounds (VOC)	NA	NA
Hazardous Air Pollutants	Potential Emissions	
	PPH	TPY
NA	NA	NA
NA	NA	NA
Regulated Pollutants other than Criteria and HAP	Potential Emissions	
	PPH	TPY
NA	NA	NA

List the method(s) used to calculate the potential emissions (include dates of any stack tests conducted, versions of software used, source and dates of emission factors, etc.).

Engineering Estimate

Applicable Requirements
List all applicable requirements for this emission unit. For each applicable requirement, include the underlying rule/regulation citation and/or construction permit with the condition number. (*Note: Title V permit condition numbers alone are not the underlying applicable requirements*). If an emission limit is calculated based on the type of source and design capacity or if a standard is based on a design parameter, this information should also be included. NA
X Permit Shield
For all applicable requirements listed above, provide monitoring/testing/recordkeeping/reporting which shall be used to demonstrate compliance. If the method is based on a permit or rule, include the condition number or citation. (Note: Each requirement listed above must have an associated method of demonstrating compliance. If there is not already a required method in place, then a method must be proposed.) NA
Are you in compliance with all applicable requirements for this emission unit? X Yes ___No If no, complete the **Schedule of Compliance Form** as **ATTACHMENT F**.

ATTACHMENT E - Emission Unit Form

Emission Unit Description

Emission unit ID number:	**Emission unit name:**	**List any control devices associated with this emission unit:**
L3B-M-2080	CSS-12 Fines Elutriator	NA

Provide a description of the emission unit (type, method of operation, design parameters, etc.):
CSS-12 Fines Elutriator

Manufacturer:	**Model number:**	**Serial number:**
NA	NA	NA
Construction date:	**Installation date:**	**Modification date(s):**
NA	1996	NA

Design Capacity (examples: furnaces - tons/hr, tanks - gallons):
1,50 ft^2

Maximum Hourly Throughput:	**Maximum Annual Throughput:**	**Maximum Operating Schedule:**
18,000 lb/hr	NA	8,760 hr/yr

Fuel Usage Data **(fill out all applicable fields)**

Does this emission unit combust fuel? ___Yes _X_ No	**If yes, is it?** ___ Indirect Fired ___Direct Fired
Maximum design heat input and/or maximum horsepower rating: NA	**Type and Btu/hr rating of burners:** NA

List the primary fuel type(s) and if applicable, the secondary fuel type(s). For each fuel type listed, provide the maximum hourly and annual fuel usage for each.
NA

Describe each fuel expected to be used during the term of the permit.

Fuel Type	Max. Sulfur Content	Max. Ash Content	BTU Value
NA	NA	NA	NA

Emissions Data		
Criteria Pollutants	Potential Emissions	
	PPH	TPY
Carbon Monoxide (CO)	NA	NA
Nitrogen Oxides (NO_X)	NA	NA
Lead (Pb)	NA	NA
Particulate Matter ($PM_{2.5}$)	NA	NA
Particulate Matter (PM_{10})	0.007	0.004
Total Particulate Matter (TSP)	0.007	0.004
Sulfur Dioxide (SO_2)	NA	NA
Volatile Organic Compounds (VOC)	NA	NA
Hazardous Air Pollutants	Potential Emissions	
	PPH	TPY
NA	NA	NA
NA	NA	NA
Regulated Pollutants other than Criteria and HAP	Potential Emissions	
	PPH	TPY
NA	NA	NA

List the method(s) used to calculate the potential emissions (include dates of any stack tests conducted, versions of software used, source and dates of emission factors, etc.).

Engineering Estimate

Applicable Requirements
List all applicable requirements for this emission unit. For each applicable requirement, include the underlying rule/regulation citation and/or construction permit with the condition number. (*Note: Title V permit condition numbers alone are not the underlying applicable requirements*). If an emission limit is calculated based on the type of source and design capacity or if a standard is based on a design parameter, this information should also be included. NA
X Permit Shield
For all applicable requirements listed above, provide monitoring/testing/recordkeeping/reporting which shall be used to demonstrate compliance. If the method is based on a permit or rule, include the condition number or citation. (Note: Each requirement listed above must have an associated method of demonstrating compliance. If there is not already a required method in place, then a method must be proposed.) NA
Are you in compliance with all applicable requirements for this emission unit? X Yes ___No If no, complete the **Schedule of Compliance Form** as **ATTACHMENT F**.

ATTACHMENT E - Emission Unit Form

Emission Unit Description

Emission unit ID number:	**Emission unit name:**	**List any control devices associated with this emission unit:**
C4B-E-2250	CSS-12 Preheater & Heater	C4B-M-2420

Provide a description of the emission unit (type, method of operation, design parameters, etc.):
CSS-12 Preheater & Heater

Manufacturer:	**Model number:**	**Serial number:**
NA	NA	NA
Construction date:	**Installation date:**	**Modification date(s):**
NA	1996	NA

Design Capacity (examples: furnaces - tons/hr, tanks - gallons):
0.87 mmBtu/hr

Maximum Hourly Throughput:	**Maximum Annual Throughput:**	**Maximum Operating Schedule:**
18,000 lb/hr	78,840 tpy	8,760 hr/yr

Fuel Usage Data **(fill out all applicable fields)**

Does this emission unit combust fuel? X Yes ___ No	**If yes, is it?** ___ Indirect Fired X Direct Fired
Maximum design heat input and/or maximum horsepower rating: 0.87mmBtu/hr	**Type and Btu/hr rating of burners:** 0.87 mmBtu/hr

List the primary fuel type(s) and if applicable, the secondary fuel type(s). For each fuel type listed, provide the maximum hourly and annual fuel usage for each.
Natural Gas - 906 SCF/hr, 7.94 mmSCF/yr

Describe each fuel expected to be used during the term of the permit.

Fuel Type	Max. Sulfur Content	Max. Ash Content	BTU Value
Natural Gas	0.01 wt%	NA	960 Btu/sfc

Emissions Data		
Criteria Pollutants	Potential Emissions	
	PPH	TPY
Carbon Monoxide (CO)	0.02	0.09
Nitrogen Oxides (NO_X)	0.07	0.31
Lead (Pb)	NA	NA
Particulate Matter ($PM_{2.5}$)	NA	NA
Particulate Matter (PM_{10})	0.004	0.02
Total Particulate Matter (TSP)	0.004	0.02
Sulfur Dioxide (SO_2)	<0.001	0.002
Volatile Organic Compounds (VOC)	0.23	1.01
Hazardous Air Pollutants	Potential Emissions	
	PPH	TPY
Ethylene Glycol	0.08	0.35
Acetaldehyde	0.13	0.57
Regulated Pollutants other than Criteria and HAP	Potential Emissions	
	PPH	TPY
NA	NA	NA

List the method(s) used to calculate the potential emissions (include dates of any stack tests conducted, versions of software used, source and dates of emission factors, etc.).

Engineering Estimate

Applicable Requirements
List all applicable requirements for this emission unit. For each applicable requirement, include the underlying rule/regulation citation and/or construction permit with the condition number. (*Note: Title V permit condition numbers alone are not the underlying applicable requirements*). If an emission limit is calculated based on the type of source and design capacity or if a standard is based on a design parameter, this information should also be included. NA
X Permit Shield
For all applicable requirements listed above, provide monitoring/testing/recordkeeping/reporting which shall be used to demonstrate compliance. If the method is based on a permit or rule, include the condition number or citation. (Note: Each requirement listed above must have an associated method of demonstrating compliance. If there is not already a required method in place, then a method must be proposed.) NA
Are you in compliance with all applicable requirements for this emission unit? X Yes ___No If no, complete the **Schedule of Compliance Form** as **ATTACHMENT F**.

ATTACHMENT E - Emission Unit Form

Emission Unit Description

Emission unit ID number:	**Emission unit name:**	**List any control devices associated with this emission unit:**
C4B-F-1420	CSS-12 Preheater Surge Bin	C4B-M-1430 & C4B-T-1600

Provide a description of the emission unit (type, method of operation, design parameters, etc.):
CSS-12 Preheater Surge Bin

Manufacturer:	**Model number:**	**Serial number:**
NA	NA	NA
Construction date:	**Installation date:**	**Modification date(s):**
NA	1996	NA

Design Capacity (examples: furnaces - tons/hr, tanks - gallons):
785 ft^3

Maximum Hourly Throughput:	**Maximum Annual Throughput:**	**Maximum Operating Schedule:**
18,000 lb/hr	78,840 tpy	8,760 hr/yr

Fuel Usage Data **(fill out all applicable fields)**

Does this emission unit combust fuel? ___ Yes X No	**If yes, is it?** ___ Indirect Fired ___ Direct Fired
Maximum design heat input and/or maximum horsepower rating: NA	**Type and Btu/hr rating of burners:** NA

List the primary fuel type(s) and if applicable, the secondary fuel type(s). For each fuel type listed, provide the maximum hourly and annual fuel usage for each.
NA

Describe each fuel expected to be used during the term of the permit.

Fuel Type	Max. Sulfur Content	Max. Ash Content	BTU Value
NA	NA	NA	NA

Emissions Data		
Criteria Pollutants	Potential Emissions	
	PPH	TPY
Carbon Monoxide (CO)	Emissions included with Hot Oil Heater C4B-T-1600.	
Nitrogen Oxides (NO_X)		
Lead (Pb)		
Particulate Matter ($PM_{2.5}$)		
Particulate Matter (PM_{10})		
Total Particulate Matter (TSP)		
Sulfur Dioxide (SO_2)		
Volatile Organic Compounds (VOC)		
Hazardous Air Pollutants	Potential Emissions	
	PPH	TPY
Emissions included with Hot Oil Heater C4B-T-1600.		
Regulated Pollutants other than Criteria and HAP	Potential Emissions	
	PPH	TPY
NA	NA	NA

List the method(s) used to calculate the potential emissions (include dates of any stack tests conducted, versions of software used, source and dates of emission factors, etc.).

Engineering Estimate

Applicable Requirements
List all applicable requirements for this emission unit. For each applicable requirement, include the underlying rule/regulation citation and/or construction permit with the condition number. (*Note: Title V permit condition numbers alone are not the underlying applicable requirements*). If an emission limit is calculated based on the type of source and design capacity or if a standard is based on a design parameter, this information should also be included. NA
X Permit Shield
For all applicable requirements listed above, provide monitoring/testing/recordkeeping/reporting which shall be used to demonstrate compliance. If the method is based on a permit or rule, include the condition number or citation. (Note: Each requirement listed above must have an associated method of demonstrating compliance. If there is not already a required method in place, then a method must be proposed.) NA
Are you in compliance with all applicable requirements for this emission unit? X Yes ___No If no, complete the **Schedule of Compliance Form** as **ATTACHMENT F**.

ATTACHMENT E - Emission Unit Form

Emission Unit Description

Emission unit ID number:	**Emission unit name:**	**List any control devices associated with this emission unit:**
C4D-E-1280	CSS-12 Product Cooler	C4D-M-0520

Provide a description of the emission unit (type, method of operation, design parameters, etc.):
CSS-12 Product Cooler

Manufacturer:	**Model number:**	**Serial number:**
NA	NA	NA
Construction date:	**Installation date:**	**Modification date(s):**
NA	1996	NA

Design Capacity (examples: furnaces - tons/hr, tanks - gallons):
42.6 ft^2

Maximum Hourly Throughput:	**Maximum Annual Throughput:**	**Maximum Operating Schedule:**
18,000 lb/hr	78,840 tpy	8,760 hr/yr

Fuel Usage Data **(fill out all applicable fields)**

Does this emission unit combust fuel? ___Yes _X_ No	**If yes, is it?** ___ Indirect Fired ___Direct Fired
Maximum design heat input and/or maximum horsepower rating: NA	**Type and Btu/hr rating of burners:** NA

List the primary fuel type(s) and if applicable, the secondary fuel type(s). For each fuel type listed, provide the maximum hourly and annual fuel usage for each.
NA

Describe each fuel expected to be used during the term of the permit.

Fuel Type	Max. Sulfur Content	Max. Ash Content	BTU Value
NA	NA	NA	NA

Emissions Data		
Criteria Pollutants	Potential Emissions	
	PPH	TPY
Carbon Monoxide (CO)	NA	NA
Nitrogen Oxides (NO_X)	NA	NA
Lead (Pb)	NA	NA
Particulate Matter ($PM_{2.5}$)	NA	NA
Particulate Matter (PM_{10})	0.03	0.11
Total Particulate Matter (TSP)	0.03	0.11
Sulfur Dioxide (SO_2)	NA	NA
Volatile Organic Compounds (VOC)	0.20	0.84
Hazardous Air Pollutants	Potential Emissions	
	PPH	TPY
Ethylene Glycol	0.16	0.66
Acetaldehyde	0.01	0.02
Regulated Pollutants other than Criteria and HAP	Potential Emissions	
	PPH	TPY
NA	NA	NA

List the method(s) used to calculate the potential emissions (include dates of any stack tests conducted, versions of software used, source and dates of emission factors, etc.).

Engineering Estimate

Applicable Requirements
List all applicable requirements for this emission unit. For each applicable requirement, include the underlying rule/regulation citation and/or construction permit with the condition number. (*Note: Title V permit condition numbers alone are not the underlying applicable requirements*). If an emission limit is calculated based on the type of source and design capacity or if a standard is based on a design parameter, this information should also be included. NA
X Permit Shield
For all applicable requirements listed above, provide monitoring/testing/recordkeeping/reporting which shall be used to demonstrate compliance. If the method is based on a permit or rule, include the condition number or citation. (Note: Each requirement listed above must have an associated method of demonstrating compliance. If there is not already a required method in place, then a method must be proposed.) NA
Are you in compliance with all applicable requirements for this emission unit? X Yes ___No If no, complete the **Schedule of Compliance Form** as **ATTACHMENT F**.

ATTACHMENT E - Emission Unit Form

Emission Unit Description

Emission unit ID number:	**Emission unit name:**	**List any control devices associated with this emission unit:**
L1C-F-1090	CSS-12 Product Silo	L1C-M-1130

Provide a description of the emission unit (type, method of operation, design parameters, etc.):
CSS-12 Product Silo

Manufacturer:	**Model number:**	**Serial number:**
NA	NA	NA
Construction date:	**Installation date:**	**Modification date(s):**
NA	1996	NA

Design Capacity (examples: furnaces - tons/hr, tanks - gallons):
4,000 ft^3

Maximum Hourly Throughput:	**Maximum Annual Throughput:**	**Maximum Operating Schedule:**
40,000 lb/hr	78,840 tpy	8,760 hr/yr

Fuel Usage Data **(fill out all applicable fields)**

Does this emission unit combust fuel? ___Yes _X_ No	**If yes, is it?** ___ Indirect Fired ___Direct Fired
Maximum design heat input and/or maximum horsepower rating: NA	**Type and Btu/hr rating of burners:** NA

List the primary fuel type(s) and if applicable, the secondary fuel type(s). For each fuel type listed, provide the maximum hourly and annual fuel usage for each.
NA

Describe each fuel expected to be used during the term of the permit.

Fuel Type	Max. Sulfur Content	Max. Ash Content	BTU Value
NA	NA	NA	NA

Emissions Data		
Criteria Pollutants	Potential Emissions	
	PPH	TPY
Carbon Monoxide (CO)	NA	NA
Nitrogen Oxides (NO_X)	NA	NA
Lead (Pb)	NA	NA
Particulate Matter ($PM_{2.5}$)	NA	NA
Particulate Matter (PM_{10})	0.003	0.001
Total Particulate Matter (TSP)	0.003	0.001
Sulfur Dioxide (SO_2)	NA	NA
Volatile Organic Compounds (VOC)	NA	NA
Hazardous Air Pollutants	Potential Emissions	
	PPH	TPY
NA	NA	NA
NA	NA	NA
Regulated Pollutants other than Criteria and HAP	Potential Emissions	
	PPH	TPY
NA	NA	NA

List the method(s) used to calculate the potential emissions (include dates of any stack tests conducted, versions of software used, source and dates of emission factors, etc.).

Engineering Estimate

Applicable Requirements
List all applicable requirements for this emission unit. For each applicable requirement, include the underlying rule/regulation citation and/or construction permit with the condition number. (*Note: Title V permit condition numbers alone are not the underlying applicable requirements*). If an emission limit is calculated based on the type of source and design capacity or if a standard is based on a design parameter, this information should also be included. **R13-1650K §4.1.13; 45CSR §7-3.7:** • Storage structure required to have full enclosure and equipped with PM control devices.
X Permit Shield
For all applicable requirements listed above, provide monitoring/testing/recordkeeping/reporting which shall be used to demonstrate compliance. If the method is based on a permit or rule, include the condition number or citation. (Note: Each requirement listed above must have an associated method of demonstrating compliance. If there is not already a required method in place, then a method must be proposed.) NA
Are you in compliance with all applicable requirements for this emission unit? X Yes ___No If no, complete the **Schedule of Compliance Form** as **ATTACHMENT F**.

ATTACHMENT E - Emission Unit Form

Emission Unit Description

Emission unit ID number:	**Emission unit name:**	**List any control devices associated with this emission unit:**
L1C-F-1100	CSS-12 Product Silo	L1C-M-1130

Provide a description of the emission unit (type, method of operation, design parameters, etc.):
CSS-12 Product Silo

Manufacturer:	**Model number:**	**Serial number:**
NA	NA	NA
Construction date:	**Installation date:**	**Modification date(s):**
NA	1996	NA

Design Capacity (examples: furnaces - tons/hr, tanks - gallons):
4,000 ft^3

Maximum Hourly Throughput:	**Maximum Annual Throughput:**	**Maximum Operating Schedule:**
40,000 lb/hr	78,840 tpy	8,760 hr/yr

Fuel Usage Data **(fill out all applicable fields)**

Does this emission unit combust fuel? ___Yes _X_ No	**If yes, is it?** ___ Indirect Fired ___Direct Fired
Maximum design heat input and/or maximum horsepower rating: NA	**Type and Btu/hr rating of burners:** NA

List the primary fuel type(s) and if applicable, the secondary fuel type(s). For each fuel type listed, provide the maximum hourly and annual fuel usage for each.
NA

Describe each fuel expected to be used during the term of the permit.

Fuel Type	Max. Sulfur Content	Max. Ash Content	BTU Value
NA	NA	NA	NA

Emissions Data		
Criteria Pollutants	Potential Emissions	
	PPH	TPY
Carbon Monoxide (CO)	NA	NA
Nitrogen Oxides (NO_X)	NA	NA
Lead (Pb)	NA	NA
Particulate Matter ($PM_{2.5}$)	NA	NA
Particulate Matter (PM_{10})	0.003	0.001
Total Particulate Matter (TSP)	0.003	0.001
Sulfur Dioxide (SO_2)	NA	NA
Volatile Organic Compounds (VOC)	NA	NA
Hazardous Air Pollutants	Potential Emissions	
	PPH	TPY
NA	NA	NA
NA	NA	NA
Regulated Pollutants other than Criteria and HAP	Potential Emissions	
	PPH	TPY
NA	NA	NA

List the method(s) used to calculate the potential emissions (include dates of any stack tests conducted, versions of software used, source and dates of emission factors, etc.).

Engineering Estimate

Applicable Requirements

List all applicable requirements for this emission unit. For each applicable requirement, include the underlying rule/regulation citation and/or construction permit with the condition number. (*Note: Title V permit condition numbers alone are not the underlying applicable requirements*). If an emission limit is calculated based on the type of source and design capacity or if a standard is based on a design parameter, this information should also be included.

R13-1650K §4.1.13; 45CSR §7-3.7:

- Storage structure required to have full enclosure and equipped with PM control devices.

X Permit Shield

For all applicable requirements listed above, provide monitoring/testing/recordkeeping/reporting which shall be used to demonstrate compliance. If the method is based on a permit or rule, include the condition number or citation. (Note: Each requirement listed above must have an associated method of demonstrating compliance. If there is not already a required method in place, then a method must be proposed.)

NA

Are you in compliance with all applicable requirements for this emission unit? X Yes ___No

If no, complete the **Schedule of Compliance Form** as **ATTACHMENT F**.

ATTACHMENT E - Emission Unit Form

Emission Unit Description

Emission unit ID number:	**Emission unit name:**	**List any control devices associated with this emission unit:**
C4C-R-3070	CSS-12 Reactor	C4B-M-1430 & C4B-T-1600

Provide a description of the emission unit (type, method of operation, design parameters, etc.):
CSS-12 Reactor

Manufacturer:	**Model number:**	**Serial number:**
NA	NA	NA
Construction date:	**Installation date:**	**Modification date(s):**
NA	1996	NA

Design Capacity (examples: furnaces - tons/hr, tanks - gallons):
2,110 ft^3

Maximum Hourly Throughput:	**Maximum Annual Throughput:**	**Maximum Operating Schedule:**
18,000 lb/hr	78,840 tpy	8,760 hr/yr

Fuel Usage Data **(fill out all applicable fields)**

Does this emission unit combust fuel? ___ Yes X No	**If yes, is it?** ___ Indirect Fired ___ Direct Fired
Maximum design heat input and/or maximum horsepower rating: NA	**Type and Btu/hr rating of burners:** NA

List the primary fuel type(s) and if applicable, the secondary fuel type(s). For each fuel type listed, provide the maximum hourly and annual fuel usage for each.
NA

Describe each fuel expected to be used during the term of the permit.

Fuel Type	Max. Sulfur Content	Max. Ash Content	BTU Value
NA	NA	NA	NA

Emissions Data		
Criteria Pollutants	Potential Emissions	
	PPH	TPY
Carbon Monoxide (CO)	Emissions included with Hot Oil Heater C4B-T-1600.	
Nitrogen Oxides (NO_X)		
Lead (Pb)		
Particulate Matter ($PM_{2.5}$)		
Particulate Matter (PM_{10})		
Total Particulate Matter (TSP)		
Sulfur Dioxide (SO_2)		
Volatile Organic Compounds (VOC)		
Hazardous Air Pollutants	Potential Emissions	
	PPH	TPY
Emissions included with Hot Oil Heater C4B-T-1600.		
Regulated Pollutants other than Criteria and HAP	Potential Emissions	
	PPH	TPY
NA	NA	NA

List the method(s) used to calculate the potential emissions (include dates of any stack tests conducted, versions of software used, source and dates of emission factors, etc.).

Engineering Estimate

Applicable Requirements
List all applicable requirements for this emission unit. For each applicable requirement, include the underlying rule/regulation citation and/or construction permit with the condition number. (*Note: Title V permit condition numbers alone are not the underlying applicable requirements*). If an emission limit is calculated based on the type of source and design capacity or if a standard is based on a design parameter, this information should also be included. NA
X Permit Shield
For all applicable requirements listed above, provide monitoring/testing/recordkeeping/reporting which shall be used to demonstrate compliance. If the method is based on a permit or rule, include the condition number or citation. (Note: Each requirement listed above must have an associated method of demonstrating compliance. If there is not already a required method in place, then a method must be proposed.) NA
Are you in compliance with all applicable requirements for this emission unit? X Yes ___No If no, complete the **Schedule of Compliance Form** as **ATTACHMENT F**.

ATTACHMENT E - Emission Unit Form

Emission Unit Description

Emission unit ID number:	**Emission unit name:**	**List any control devices associated with this emission unit:**
C4C-R-1060/ C4C-E-2320	CSS-12 Reactor & Reheater	C4B-T-1600

Provide a description of the emission unit (type, method of operation, design parameters, etc.):
CSS-12 Reactor & Reheater

Manufacturer:	**Model number:**	**Serial number:**
NA	NA	NA
Construction date:	**Installation date:**	**Modification date(s):**
NA	1996	NA

Design Capacity (examples: furnaces - tons/hr, tanks - gallons):
1,958 ft^3

Maximum Hourly Throughput:	**Maximum Annual Throughput:**	**Maximum Operating Schedule:**
18,000 lb/hr	78,840 tpy	8,760 hr/yr

Fuel Usage Data **(fill out all applicable fields)**

Does this emission unit combust fuel? ___ Yes X No	**If yes, is it?** ___ Indirect Fired ___ Direct Fired
Maximum design heat input and/or maximum horsepower rating: NA	**Type and Btu/hr rating of burners:** NA

List the primary fuel type(s) and if applicable, the secondary fuel type(s). For each fuel type listed, provide the maximum hourly and annual fuel usage for each.
NA

Describe each fuel expected to be used during the term of the permit.

Fuel Type	Max. Sulfur Content	Max. Ash Content	BTU Value
NA	NA	NA	NA

Emissions Data		
Criteria Pollutants	Potential Emissions	
	PPH	TPY
Carbon Monoxide (CO)	Emissions included with Hot Oil Heater C4B-T-1600.	
Nitrogen Oxides (NO_X)		
Lead (Pb)		
Particulate Matter ($PM_{2.5}$)		
Particulate Matter (PM_{10})		
Total Particulate Matter (TSP)		
Sulfur Dioxide (SO_2)		
Volatile Organic Compounds (VOC)		
Hazardous Air Pollutants	Potential Emissions	
	PPH	TPY
Emissions included with Hot Oil Heater C4B-T-1600.		
Regulated Pollutants other than Criteria and HAP	Potential Emissions	
	PPH	TPY
NA	NA	NA

List the method(s) used to calculate the potential emissions (include dates of any stack tests conducted, versions of software used, source and dates of emission factors, etc.).

Engineering Estimate

Applicable Requirements
List all applicable requirements for this emission unit. For each applicable requirement, include the underlying rule/regulation citation and/or construction permit with the condition number. (*Note: Title V permit condition numbers alone are not the underlying applicable requirements*). If an emission limit is calculated based on the type of source and design capacity or if a standard is based on a design parameter, this information should also be included. NA
X Permit Shield
For all applicable requirements listed above, provide monitoring/testing/recordkeeping/reporting which shall be used to demonstrate compliance. If the method is based on a permit or rule, include the condition number or citation. (Note: Each requirement listed above must have an associated method of demonstrating compliance. If there is not already a required method in place, then a method must be proposed.) NA
Are you in compliance with all applicable requirements for this emission unit? X Yes ___No If no, complete the **Schedule of Compliance Form** as **ATTACHMENT F**.

ATTACHMENT E - Emission Unit Form

Emission Unit Description

Emission unit ID number:	**Emission unit name:**	**List any control devices associated with this emission unit:**
L4C-F-0210	CSS-12 & CSS-13 Salvage Silo	L4C-M-0390

Provide a description of the emission unit (type, method of operation, design parameters, etc.):
CSS-12 & CSS-13 Salvage Silo

Manufacturer:	**Model number:**	**Serial number:**
NA	NA	NA
Construction date:	**Installation date:**	**Modification date(s):**
NA	1996	NA

Design Capacity (examples: furnaces - tons/hr, tanks - gallons):
1,500 ft^2

Maximum Hourly Throughput:	**Maximum Annual Throughput:**	**Maximum Operating Schedule:**
40,000 lb/hr	NA	8,760 hr/yr

Fuel Usage Data **(fill out all applicable fields)**

Does this emission unit combust fuel? ___Yes _X_ No	**If yes, is it?** ___ Indirect Fired ___Direct Fired
Maximum design heat input and/or maximum horsepower rating: NA	**Type and Btu/hr rating of burners:** NA

List the primary fuel type(s) and if applicable, the secondary fuel type(s). For each fuel type listed, provide the maximum hourly and annual fuel usage for each.
NA

Describe each fuel expected to be used during the term of the permit.

Fuel Type	Max. Sulfur Content	Max. Ash Content	BTU Value
NA	NA	NA	NA

Emissions Data		
Criteria Pollutants	Potential Emissions	
	PPH	TPY
Carbon Monoxide (CO)	NA	NA
Nitrogen Oxides (NO_X)	NA	NA
Lead (Pb)	NA	NA
Particulate Matter ($PM_{2.5}$)	NA	NA
Particulate Matter (PM_{10})	0.10	0.001
Total Particulate Matter (TSP)	0.10	0.001
Sulfur Dioxide (SO_2)	NA	NA
Volatile Organic Compounds (VOC)	NA	NA
Hazardous Air Pollutants	Potential Emissions	
	PPH	TPY
NA	NA	NA
NA	NA	NA
Regulated Pollutants other than Criteria and HAP	Potential Emissions	
	PPH	TPY
NA	NA	NA

List the method(s) used to calculate the potential emissions (include dates of any stack tests conducted, versions of software used, source and dates of emission factors, etc.).

Engineering Estimate

Applicable Requirements
List all applicable requirements for this emission unit. For each applicable requirement, include the underlying rule/regulation citation and/or construction permit with the condition number. (*Note: Title V permit condition numbers alone are not the underlying applicable requirements*). If an emission limit is calculated based on the type of source and design capacity or if a standard is based on a design parameter, this information should also be included. **R13-1650K §4.1.13; 45CSR §7-3.7:** • Storage structure required to have full enclosure and equipped with PM control devices.
X Permit Shield
For all applicable requirements listed above, provide monitoring/testing/recordkeeping/reporting which shall be used to demonstrate compliance. If the method is based on a permit or rule, include the condition number or citation. (Note: Each requirement listed above must have an associated method of demonstrating compliance. If there is not already a required method in place, then a method must be proposed.) NA
Are you in compliance with all applicable requirements for this emission unit? X Yes ___No If no, complete the **Schedule of Compliance Form** as **ATTACHMENT F**.

CSS-13

ATTACHMENT E - Emission Unit Form

Emission Unit Description

Emission unit ID number:	**Emission unit name:**	**List any control devices associated with this emission unit:**
C4A-E-7240	CSS-13 Crystallizer & Heater	C4A-M-7350

Provide a description of the emission unit (type, method of operation, design parameters, etc.):
CSS-13 Crystallizer & Heater

Manufacturer:	**Model number:**	**Serial number:**
NA	NA	NA
Construction date:	**Installation date:**	**Modification date(s):**
NA	1996	NA

Design Capacity (examples: furnaces - tons/hr, tanks - gallons):
2.04 mmBtu/hr

Maximum Hourly Throughput:	**Maximum Annual Throughput:**	**Maximum Operating Schedule:**
18,000 lb/hr	78,840 tpy	8,760 hr/yr

Fuel Usage Data **(fill out all applicable fields)**

Does this emission unit combust fuel? X Yes ___ No	**If yes, is it?** ___ Indirect Fired X Direct Fired
Maximum design heat input and/or maximum horsepower rating: 2.04 mmBtu/hr	**Type and Btu/hr rating of burners:** 2.04 mmBtu/hr

List the primary fuel type(s) and if applicable, the secondary fuel type(s). For each fuel type listed, provide the maximum hourly and annual fuel usage for each.
Natural Gas - 2125 scf/hr, 18.6 mmscf/yr

Describe each fuel expected to be used during the term of the permit.

Fuel Type	Max. Sulfur Content	Max. Ash Content	BTU Value
Natural Gas	0.01 wt%	NA	960 Btu/sfc

Emissions Data		
Criteria Pollutants	Potential Emissions	
	PPH	TPY
Carbon Monoxide (CO)	0.03	0.13
Nitrogen Oxides (NO_X)	0.13	0.57
Lead (Pb)	NA	NA
Particulate Matter ($PM_{2.5}$)	NA	NA
Particulate Matter (PM_{10})	0.006	0.03
Total Particulate Matter (TSP)	0.006	0.03
Sulfur Dioxide (SO_2)	0.001	0.004
Volatile Organic Compounds (VOC)	0.37	1.62
Hazardous Air Pollutants	Potential Emissions	
	PPH	TPY
Ethylene Glycol	0.30	1.25
Acetaldehyde	0.06	0.26
Regulated Pollutants other than Criteria and HAP	Potential Emissions	
	PPH	TPY
NA	NA	NA

List the method(s) used to calculate the potential emissions (include dates of any stack tests conducted, versions of software used, source and dates of emission factors, etc.).

Engineering Estimate

Applicable Requirements
List all applicable requirements for this emission unit. For each applicable requirement, include the underlying rule/regulation citation and/or construction permit with the condition number. (*Note: Title V permit condition numbers alone are not the underlying applicable requirements*). If an emission limit is calculated based on the type of source and design capacity or if a standard is based on a design parameter, this information should also be included. NA
X Permit Shield
For all applicable requirements listed above, provide monitoring/testing/recordkeeping/reporting which shall be used to demonstrate compliance. If the method is based on a permit or rule, include the condition number or citation. (Note: Each requirement listed above must have an associated method of demonstrating compliance. If there is not already a required method in place, then a method must be proposed.) NA
Are you in compliance with all applicable requirements for this emission unit? X Yes ___No If no, complete the **Schedule of Compliance Form** as **ATTACHMENT F**.

ATTACHMENT E - Emission Unit Form

Emission Unit Description

Emission unit ID number:	**Emission unit name:**	**List any control devices associated with this emission unit:**
C4E-F-5440	CSS-13 Verification Bin	C4E-M-5590

Provide a description of the emission unit (type, method of operation, design parameters, etc.):
CSS-13 Verification Bin

Manufacturer:	**Model number:**	**Serial number:**
NA	NA	NA
Construction date:	**Installation date:**	**Modification date(s):**
NA	1996	NA

Design Capacity (examples: furnaces - tons/hr, tanks - gallons):
1,450 ft^3

Maximum Hourly Throughput:	**Maximum Annual Throughput:**	**Maximum Operating Schedule:**
18,000 lb/hr	78,840 tpy	8,760 hr/yr

Fuel Usage Data **(fill out all applicable fields)**

Does this emission unit combust fuel? ___Yes _X_ No	**If yes, is it?** ___ Indirect Fired ___Direct Fired
Maximum design heat input and/or maximum horsepower rating: NA	**Type and Btu/hr rating of burners:** NA

List the primary fuel type(s) and if applicable, the secondary fuel type(s). For each fuel type listed, provide the maximum hourly and annual fuel usage for each.
NA

Describe each fuel expected to be used during the term of the permit.

Fuel Type	Max. Sulfur Content	Max. Ash Content	BTU Value
NA	NA	NA	NA

Emissions Data		
Criteria Pollutants	Potential Emissions	
	PPH	TPY
Carbon Monoxide (CO)	NA	NA
Nitrogen Oxides (NO_X)	NA	NA
Lead (Pb)	NA	NA
Particulate Matter ($PM_{2.5}$)	NA	NA
Particulate Matter (PM_{10})	0.001	0.005
Total Particulate Matter (TSP)	0.001	0.005
Sulfur Dioxide (SO_2)	NA	NA
Volatile Organic Compounds (VOC)	NA	NA
Hazardous Air Pollutants	Potential Emissions	
	PPH	TPY
NA	NA	NA
NA	NA	NA
Regulated Pollutants other than Criteria and HAP	Potential Emissions	
	PPH	TPY
NA	NA	NA

List the method(s) used to calculate the potential emissions (include dates of any stack tests conducted, versions of software used, source and dates of emission factors, etc.).

Engineering Estimate

Applicable Requirements
List all applicable requirements for this emission unit. For each applicable requirement, include the underlying rule/regulation citation and/or construction permit with the condition number. (*Note: Title V permit condition numbers alone are not the underlying applicable requirements*). If an emission limit is calculated based on the type of source and design capacity or if a standard is based on a design parameter, this information should also be included. NA
X Permit Shield
For all applicable requirements listed above, provide monitoring/testing/recordkeeping/reporting which shall be used to demonstrate compliance. If the method is based on a permit or rule, include the condition number or citation. (Note: Each requirement listed above must have an associated method of demonstrating compliance. If there is not already a required method in place, then a method must be proposed.) NA
Are you in compliance with all applicable requirements for this emission unit? X Yes ___No If no, complete the **Schedule of Compliance Form** as **ATTACHMENT F**.

ATTACHMENT E - Emission Unit Form

Emission Unit Description

Emission unit ID number:	**Emission unit name:**	**List any control devices associated with this emission unit:**
C4A-F-6460	CSS-13 Crystallizer Surge Bin	C4A-M-6390

Provide a description of the emission unit (type, method of operation, design parameters, etc.):
CSS-13 Crystallizer Surge Bin

Manufacturer:	**Model number:**	**Serial number:**
NA	NA	NA
Construction date:	**Installation date:**	**Modification date(s):**
NA	1996	NA

Design Capacity (examples: furnaces - tons/hr, tanks - gallons):
1,570 ft^3

Maximum Hourly Throughput:	**Maximum Annual Throughput:**	**Maximum Operating Schedule:**
18,000 lb/hr	78,840 tpy	8,760 hr/yr

Fuel Usage Data **(fill out all applicable fields)**

Does this emission unit combust fuel? ___Yes _X_ No	**If yes, is it?** ___ Indirect Fired ___Direct Fired
Maximum design heat input and/or maximum horsepower rating: NA	**Type and Btu/hr rating of burners:** NA

List the primary fuel type(s) and if applicable, the secondary fuel type(s). For each fuel type listed, provide the maximum hourly and annual fuel usage for each.
NA

Describe each fuel expected to be used during the term of the permit.

Fuel Type	Max. Sulfur Content	Max. Ash Content	BTU Value
NA	NA	NA	NA

Emissions Data		
Criteria Pollutants	Potential Emissions	
	PPH	TPY
Carbon Monoxide (CO)	NA	NA
Nitrogen Oxides (NO_X)	NA	NA
Lead (Pb)	NA	NA
Particulate Matter ($PM_{2.5}$)	NA	NA
Particulate Matter (PM_{10})	0.002	0.008
Total Particulate Matter (TSP)	0.002	0.008
Sulfur Dioxide (SO_2)	NA	NA
Volatile Organic Compounds (VOC)	NA	NA
Hazardous Air Pollutants	Potential Emissions	
	PPH	TPY
NA	NA	NA
Regulated Pollutants other than Criteria and HAP	Potential Emissions	
	PPH	TPY
NA	NA	NA

List the method(s) used to calculate the potential emissions (include dates of any stack tests conducted, versions of software used, source and dates of emission factors, etc.).

Engineering Estimate

Applicable Requirements
List all applicable requirements for this emission unit. For each applicable requirement, include the underlying rule/regulation citation and/or <u>construction permit</u> with the condition number. (*Note: Title V permit condition numbers alone are not the underlying applicable requirements*). If an emission limit is calculated based on the type of source and design capacity or if a standard is based on a design parameter, this information should also be included. NA
<u>X</u> Permit Shield
For all applicable requirements listed above, provide monitoring/testing/recordkeeping/reporting which shall be used to demonstrate compliance. If the method is based on a permit or rule, include the condition number or citation. (Note: Each requirement listed above must have an associated method of demonstrating compliance. If there is not already a required method in place, then a method must be proposed.) NA
Are you in compliance with all applicable requirements for this emission unit? <u>X</u> Yes ___No If no, complete the **Schedule of Compliance Form** as **ATTACHMENT F**.

ATTACHMENT E - Emission Unit Form

Emission Unit Description

Emission unit ID number:	**Emission unit name:**	**List any control devices associated with this emission unit:**
C4E-F-2080	CSS-13 Fines Elutriator	NA

Provide a description of the emission unit (type, method of operation, design parameters, etc.):
CSS-13 Fines Elutriator

Manufacturer:	**Model number:**	**Serial number:**
NA	NA	NA
Construction date:	**Installation date:**	**Modification date(s):**
NA	1996	NA

Design Capacity (examples: furnaces - tons/hr, tanks - gallons):
1,50 ft^2

Maximum Hourly Throughput:	**Maximum Annual Throughput:**	**Maximum Operating Schedule:**
18,000 lb/hr	NA	8,760 hr/yr

Fuel Usage Data **(fill out all applicable fields)**

Does this emission unit combust fuel? ___Yes _X_ No	**If yes, is it?** ___ Indirect Fired ___Direct Fired
Maximum design heat input and/or maximum horsepower rating: NA	**Type and Btu/hr rating of burners:** NA

List the primary fuel type(s) and if applicable, the secondary fuel type(s). For each fuel type listed, provide the maximum hourly and annual fuel usage for each.
NA

Describe each fuel expected to be used during the term of the permit.

Fuel Type	Max. Sulfur Content	Max. Ash Content	BTU Value
NA	NA	NA	NA

Emissions Data		
Criteria Pollutants	Potential Emissions	
	PPH	TPY
Carbon Monoxide (CO)	NA	NA
Nitrogen Oxides (NO_X)	NA	NA
Lead (Pb)	NA	NA
Particulate Matter ($PM_{2.5}$)	NA	NA
Particulate Matter (PM_{10})	0.01	0.004
Total Particulate Matter (TSP)	0.01	0.004
Sulfur Dioxide (SO_2)	NA	NA
Volatile Organic Compounds (VOC)	NA	NA
Hazardous Air Pollutants	Potential Emissions	
	PPH	TPY
NA	NA	NA
NA	NA	NA
Regulated Pollutants other than Criteria and HAP	Potential Emissions	
	PPH	TPY
NA	NA	NA

List the method(s) used to calculate the potential emissions (include dates of any stack tests conducted, versions of software used, source and dates of emission factors, etc.).

Engineering Estimate

Applicable Requirements
List all applicable requirements for this emission unit. For each applicable requirement, include the underlying rule/regulation citation and/or construction permit with the condition number. (*Note: Title V permit condition numbers alone are not the underlying applicable requirements*). If an emission limit is calculated based on the type of source and design capacity or if a standard is based on a design parameter, this information should also be included. NA
X Permit Shield
For all applicable requirements listed above, provide monitoring/testing/recordkeeping/reporting which shall be used to demonstrate compliance. If the method is based on a permit or rule, include the condition number or citation. (Note: Each requirement listed above must have an associated method of demonstrating compliance. If there is not already a required method in place, then a method must be proposed.) NA
Are you in compliance with all applicable requirements for this emission unit? X Yes ___No If no, complete the **Schedule of Compliance Form** as **ATTACHMENT F**.

ATTACHMENT E - Emission Unit Form

Emission Unit Description

Emission unit ID number:	**Emission unit name:**	**List any control devices associated with this emission unit:**
L1D-M-1130	CSS-13 Fines Elutriator	NA

Provide a description of the emission unit (type, method of operation, design parameters, etc.):
CSS-13 Fines Elutriator

Manufacturer:	**Model number:**	**Serial number:**
NA	NA	NA
Construction date:	**Installation date:**	**Modification date(s):**
NA	1996	NA

Design Capacity (examples: furnaces - tons/hr, tanks - gallons):
1,50 ft^2

Maximum Hourly Throughput:	**Maximum Annual Throughput:**	**Maximum Operating Schedule:**
18,000 lb/hr	NA	8,760 hr/yr

Fuel Usage Data **(fill out all applicable fields)**

Does this emission unit combust fuel? ___Yes _X_ No	**If yes, is it?** ___ Indirect Fired ___Direct Fired
Maximum design heat input and/or maximum horsepower rating: NA	**Type and Btu/hr rating of burners:** NA

List the primary fuel type(s) and if applicable, the secondary fuel type(s). For each fuel type listed, provide the maximum hourly and annual fuel usage for each.
NA

Describe each fuel expected to be used during the term of the permit.

Fuel Type	Max. Sulfur Content	Max. Ash Content	BTU Value
NA	NA	NA	NA

Emissions Data		
Criteria Pollutants	Potential Emissions	
	PPH	TPY
Carbon Monoxide (CO)	NA	NA
Nitrogen Oxides (NO_X)	NA	NA
Lead (Pb)	NA	NA
Particulate Matter ($PM_{2.5}$)	NA	NA
Particulate Matter (PM_{10})	0.01	0.004
Total Particulate Matter (TSP)	0.01	0.004
Sulfur Dioxide (SO_2)	NA	NA
Volatile Organic Compounds (VOC)	NA	NA
Hazardous Air Pollutants	Potential Emissions	
	PPH	TPY
NA	NA	NA
NA	NA	NA
Regulated Pollutants other than Criteria and HAP	Potential Emissions	
	PPH	TPY
NA	NA	NA

List the method(s) used to calculate the potential emissions (include dates of any stack tests conducted, versions of software used, source and dates of emission factors, etc.).

Engineering Estimate

Applicable Requirements
List all applicable requirements for this emission unit. For each applicable requirement, include the underlying rule/regulation citation and/or <u>construction permit</u> with the condition number. (*Note: Title V permit condition numbers alone are not the underlying applicable requirements*). If an emission limit is calculated based on the type of source and design capacity or if a standard is based on a design parameter, this information should also be included. NA
<u>X</u> Permit Shield
For all applicable requirements listed above, provide monitoring/testing/recordkeeping/reporting which shall be used to demonstrate compliance. If the method is based on a permit or rule, include the condition number or citation. (Note: Each requirement listed above must have an associated method of demonstrating compliance. If there is not already a required method in place, then a method must be proposed.) NA
Are you in compliance with all applicable requirements for this emission unit? <u>X</u> Yes ___No If no, complete the **Schedule of Compliance Form** as **ATTACHMENT F**.

ATTACHMENT E - Emission Unit Form

Emission Unit Description

Emission unit ID number:	**Emission unit name:**	**List any control devices associated with this emission unit:**
C4B-E-6250	CSS-13 Preheater & Heater	C4B-M-6420

Provide a description of the emission unit (type, method of operation, design parameters, etc.):
CSS-13 Preheater & Heater

Manufacturer:	**Model number:**	**Serial number:**
NA	NA	NA
Construction date:	**Installation date:**	**Modification date(s):**
NA	1996	NA

Design Capacity (examples: furnaces - tons/hr, tanks - gallons):
0.87 mmBtu/hr

Maximum Hourly Throughput:	**Maximum Annual Throughput:**	**Maximum Operating Schedule:**
18,000 lb/hr	78,840 tpy	8,760 hr/yr

Fuel Usage Data **(fill out all applicable fields)**

Does this emission unit combust fuel? X Yes ___ No	**If yes, is it?** ___ Indirect Fired X Direct Fired
Maximum design heat input and/or maximum horsepower rating: 0.87mmBtu/hr	**Type and Btu/hr rating of burners:** 0.87 mmBtu/hr

List the primary fuel type(s) and if applicable, the secondary fuel type(s). For each fuel type listed, provide the maximum hourly and annual fuel usage for each.
Natural Gas - 906 scf/hr, 7.96 mmscf/yr

Describe each fuel expected to be used during the term of the permit.

Fuel Type	Max. Sulfur Content	Max. Ash Content	BTU Value
Natural Gas	0.01 wt%	NA	960 Btu/sfc

Emissions Data		
Criteria Pollutants	Potential Emissions	
	PPH	TPY
Carbon Monoxide (CO)	0.02	0.09
Nitrogen Oxides (NO_X)	0.07	0.31
Lead (Pb)	NA	NA
Particulate Matter ($PM_{2.5}$)	NA	NA
Particulate Matter (PM_{10})	0.004	0.02
Total Particulate Matter (TSP)	0.004	0.02
Sulfur Dioxide (SO_2)	<0.001	0.002
Volatile Organic Compounds (VOC)	0.23	1.01
Hazardous Air Pollutants	Potential Emissions	
	PPH	TPY
Ethylene Glycol	0.08	0.35
Acetaldehyde	0.13	0.57
Regulated Pollutants other than Criteria and HAP	Potential Emissions	
	PPH	TPY
NA	NA	NA

List the method(s) used to calculate the potential emissions (include dates of any stack tests conducted, versions of software used, source and dates of emission factors, etc.).

Engineering Estimate

Applicable Requirements
List all applicable requirements for this emission unit. For each applicable requirement, include the underlying rule/regulation citation and/or construction permit with the condition number. (*Note: Title V permit condition numbers alone are not the underlying applicable requirements*). If an emission limit is calculated based on the type of source and design capacity or if a standard is based on a design parameter, this information should also be included. NA
X Permit Shield
For all applicable requirements listed above, provide monitoring/testing/recordkeeping/reporting which shall be used to demonstrate compliance. If the method is based on a permit or rule, include the condition number or citation. (Note: Each requirement listed above must have an associated method of demonstrating compliance. If there is not already a required method in place, then a method must be proposed.) NA
Are you in compliance with all applicable requirements for this emission unit? X Yes ___No If no, complete the **Schedule of Compliance Form** as **ATTACHMENT F**.

ATTACHMENT E - Emission Unit Form

Emission Unit Description

Emission unit ID number:	**Emission unit name:**	**List any control devices associated with this emission unit:**
C4B-F-5420	CSS-13 Preheater Surge Bin	C4B-M-5430 & C4B-T-1600

Provide a description of the emission unit (type, method of operation, design parameters, etc.):
CSS-13 Preheater Surge Bin

Manufacturer:	**Model number:**	**Serial number:**
NA	NA	NA
Construction date:	**Installation date:**	**Modification date(s):**
NA	1996	NA

Design Capacity (examples: furnaces - tons/hr, tanks - gallons):
1,390 ft^3

Maximum Hourly Throughput:	**Maximum Annual Throughput:**	**Maximum Operating Schedule:**
18,000 lb/hr	78,840 tpy	8,760 hr/yr

Fuel Usage Data **(fill out all applicable fields)**

Does this emission unit combust fuel? ___ Yes X No	**If yes, is it?** ___ Indirect Fired ___ Direct Fired
Maximum design heat input and/or maximum horsepower rating: NA	**Type and Btu/hr rating of burners:** NA

List the primary fuel type(s) and if applicable, the secondary fuel type(s). For each fuel type listed, provide the maximum hourly and annual fuel usage for each.
NA

Describe each fuel expected to be used during the term of the permit.

Fuel Type	Max. Sulfur Content	Max. Ash Content	BTU Value
NA	NA	NA	NA

Emissions Data		
Criteria Pollutants	Potential Emissions	
	PPH	TPY
Carbon Monoxide (CO)	Emissions included with Hot Oil Heater C4B-T-1600.	
Nitrogen Oxides (NO_X)		
Lead (Pb)		
Particulate Matter ($PM_{2.5}$)		
Particulate Matter (PM_{10})		
Total Particulate Matter (TSP)		
Sulfur Dioxide (SO_2)		
Volatile Organic Compounds (VOC)		
Hazardous Air Pollutants	Potential Emissions	
	PPH	TPY
Emissions included with Hot Oil Heater C4B-T-1600.		
Regulated Pollutants other than Criteria and HAP	Potential Emissions	
	PPH	TPY
NA	NA	NA

List the method(s) used to calculate the potential emissions (include dates of any stack tests conducted, versions of software used, source and dates of emission factors, etc.).

Engineering Estimate

Applicable Requirements
List all applicable requirements for this emission unit. For each applicable requirement, include the underlying rule/regulation citation and/or construction permit with the condition number. (*Note: Title V permit condition numbers alone are not the underlying applicable requirements*). If an emission limit is calculated based on the type of source and design capacity or if a standard is based on a design parameter, this information should also be included. NA
X Permit Shield
For all applicable requirements listed above, provide monitoring/testing/recordkeeping/reporting which shall be used to demonstrate compliance. If the method is based on a permit or rule, include the condition number or citation. (Note: Each requirement listed above must have an associated method of demonstrating compliance. If there is not already a required method in place, then a method must be proposed.) NA
Are you in compliance with all applicable requirements for this emission unit? X Yes ___No If no, complete the **Schedule of Compliance Form** as **ATTACHMENT F**.

ATTACHMENT E - Emission Unit Form

Emission Unit Description

Emission unit ID number:	**Emission unit name:**	**List any control devices associated with this emission unit:**
C4D-E-5280	CSS-13 Product Cooler	C4D-M-0520

Provide a description of the emission unit (type, method of operation, design parameters, etc.):
CSS-13 Product Cooler

Manufacturer:	**Model number:**	**Serial number:**
NA	NA	NA
Construction date:	**Installation date:**	**Modification date(s):**
NA	1996	NA

Design Capacity (examples: furnaces - tons/hr, tanks - gallons):
42.6 ft^2

Maximum Hourly Throughput:	**Maximum Annual Throughput:**	**Maximum Operating Schedule:**
18,000 lb/hr	78,840 tpy	8,760 hr/yr

Fuel Usage Data **(fill out all applicable fields)**

Does this emission unit combust fuel? ___Yes _X_ No	**If yes, is it?** ___ Indirect Fired ___Direct Fired
Maximum design heat input and/or maximum horsepower rating: NA	**Type and Btu/hr rating of burners:** NA

List the primary fuel type(s) and if applicable, the secondary fuel type(s). For each fuel type listed, provide the maximum hourly and annual fuel usage for each.
NA

Describe each fuel expected to be used during the term of the permit.

Fuel Type	Max. Sulfur Content	Max. Ash Content	BTU Value
NA	NA	NA	NA

Emissions Data		
Criteria Pollutants	Potential Emissions	
	PPH	TPY
Carbon Monoxide (CO)	NA	NA
Nitrogen Oxides (NO_X)	NA	NA
Lead (Pb)	NA	NA
Particulate Matter ($PM_{2.5}$)	NA	NA
Particulate Matter (PM_{10})	Emissions included with CSS-12 Product Cooler C4D-E-1280.	
Total Particulate Matter (TSP)	Emissions included with CSS-12 Product Cooler C4D-E-1280.	
Sulfur Dioxide (SO_2)	NA	NA
Volatile Organic Compounds (VOC)	Emissions included with CSS-12 Product Cooler C4D-E-1280.	
Hazardous Air Pollutants	Potential Emissions	
	PPH	TPY
Ethylene Glycol	Emissions included with CSS-12 Product Cooler C4D-E-1280.	
Acetaldehyde	Emissions included with CSS-12 Product Cooler C4D-E-1280.	
Regulated Pollutants other than Criteria and HAP	Potential Emissions	
	PPH	TPY
NA	NA	NA

List the method(s) used to calculate the potential emissions (include dates of any stack tests conducted, versions of software used, source and dates of emission factors, etc.).

Engineering Estimate

Applicable Requirements
List all applicable requirements for this emission unit. For each applicable requirement, include the underlying rule/regulation citation and/or construction permit with the condition number. (*Note: Title V permit condition numbers alone are not the underlying applicable requirements*). If an emission limit is calculated based on the type of source and design capacity or if a standard is based on a design parameter, this information should also be included. NA
X Permit Shield
For all applicable requirements listed above, provide monitoring/testing/recordkeeping/reporting which shall be used to demonstrate compliance. If the method is based on a permit or rule, include the condition number or citation. (Note: Each requirement listed above must have an associated method of demonstrating compliance. If there is not already a required method in place, then a method must be proposed.) NA
Are you in compliance with all applicable requirements for this emission unit? X Yes ___No If no, complete the **Schedule of Compliance Form** as **ATTACHMENT F**.

ATTACHMENT E - Emission Unit Form

Emission Unit Description

Emission unit ID number:	**Emission unit name:**	**List any control devices associated with this emission unit:**
L1D-F-1110	CSS-13 Product Silo	L1C-M-1130

Provide a description of the emission unit (type, method of operation, design parameters, etc.):
CSS-13 Product Silo

Manufacturer:	**Model number:**	**Serial number:**
NA	NA	NA
Construction date:	**Installation date:**	**Modification date(s):**
NA	1996	NA

Design Capacity (examples: furnaces - tons/hr, tanks - gallons):
4,000 ft^3

Maximum Hourly Throughput:	**Maximum Annual Throughput:**	**Maximum Operating Schedule:**
18,000 lb/hr	NA	8,760 hr/yr

Fuel Usage Data **(fill out all applicable fields)**

Does this emission unit combust fuel? ___Yes _X_ No	**If yes, is it?** ___ Indirect Fired ___Direct Fired
Maximum design heat input and/or maximum horsepower rating: NA	**Type and Btu/hr rating of burners:** NA

List the primary fuel type(s) and if applicable, the secondary fuel type(s). For each fuel type listed, provide the maximum hourly and annual fuel usage for each.
NA

Describe each fuel expected to be used during the term of the permit.

Fuel Type	Max. Sulfur Content	Max. Ash Content	BTU Value
NA	NA	NA	NA

Emissions Data		
Criteria Pollutants	Potential Emissions	
	PPH	TPY
Carbon Monoxide (CO)	NA	NA
Nitrogen Oxides (NO_X)	NA	NA
Lead (Pb)	NA	NA
Particulate Matter ($PM_{2.5}$)	NA	NA
Particulate Matter (PM_{10})	0.003	0.001
Total Particulate Matter (TSP)	0.003	0.001
Sulfur Dioxide (SO_2)	NA	NA
Volatile Organic Compounds (VOC)	NA	NA
Hazardous Air Pollutants	Potential Emissions	
	PPH	TPY
NA	NA	NA
NA	NA	NA
Regulated Pollutants other than Criteria and HAP	Potential Emissions	
	PPH	TPY
NA	NA	NA

List the method(s) used to calculate the potential emissions (include dates of any stack tests conducted, versions of software used, source and dates of emission factors, etc.).

Engineering Estimate

Applicable Requirements
List all applicable requirements for this emission unit. For each applicable requirement, include the underlying rule/regulation citation and/or construction permit with the condition number. (*Note: Title V permit condition numbers alone are not the underlying applicable requirements*). If an emission limit is calculated based on the type of source and design capacity or if a standard is based on a design parameter, this information should also be included. **R13-1650K §4.1.13; 45CSR §7-3.7:** • Storage structure required to have full enclosure and equipped with PM control devices.
X Permit Shield
For all applicable requirements listed above, provide monitoring/testing/recordkeeping/reporting which shall be used to demonstrate compliance. If the method is based on a permit or rule, include the condition number or citation. (Note: Each requirement listed above must have an associated method of demonstrating compliance. If there is not already a required method in place, then a method must be proposed.) NA
Are you in compliance with all applicable requirements for this emission unit? X Yes ___No If no, complete the **Schedule of Compliance Form** as **ATTACHMENT F**.

ATTACHMENT E - Emission Unit Form

Emission Unit Description

Emission unit ID number:	**Emission unit name:**	**List any control devices associated with this emission unit:**
L1D-F-1120	CSS-13 Product Silo	L1C-M-1130

Provide a description of the emission unit (type, method of operation, design parameters, etc.):
CSS-13 Product Silo

Manufacturer:	**Model number:**	**Serial number:**
NA	NA	NA
Construction date:	**Installation date:**	**Modification date(s):**
NA	1996	NA

Design Capacity (examples: furnaces - tons/hr, tanks - gallons):
4,000 ft^3

Maximum Hourly Throughput:	**Maximum Annual Throughput:**	**Maximum Operating Schedule:**
18,000 lb/hr	NA	8,760 hr/yr

Fuel Usage Data **(fill out all applicable fields)**

Does this emission unit combust fuel? ___Yes _X_ No	**If yes, is it?** ___ Indirect Fired ___Direct Fired
Maximum design heat input and/or maximum horsepower rating: NA	**Type and Btu/hr rating of burners:** NA

List the primary fuel type(s) and if applicable, the secondary fuel type(s). For each fuel type listed, provide the maximum hourly and annual fuel usage for each.
NA

Describe each fuel expected to be used during the term of the permit.

Fuel Type	Max. Sulfur Content	Max. Ash Content	BTU Value
NA	NA	NA	NA

Emissions Data		
Criteria Pollutants	Potential Emissions	
	PPH	TPY
Carbon Monoxide (CO)	NA	NA
Nitrogen Oxides (NO_X)	NA	NA
Lead (Pb)	NA	NA
Particulate Matter ($PM_{2.5}$)	NA	NA
Particulate Matter (PM_{10})	0.003	0.001
Total Particulate Matter (TSP)	0.003	0.001
Sulfur Dioxide (SO_2)	NA	NA
Volatile Organic Compounds (VOC)	NA	NA
Hazardous Air Pollutants	Potential Emissions	
	PPH	TPY
NA	NA	NA
NA	NA	NA
Regulated Pollutants other than Criteria and HAP	Potential Emissions	
	PPH	TPY
NA	NA	NA

List the method(s) used to calculate the potential emissions (include dates of any stack tests conducted, versions of software used, source and dates of emission factors, etc.).

Engineering Estimate

Applicable Requirements

List all applicable requirements for this emission unit. For each applicable requirement, include the underlying rule/regulation citation and/or construction permit with the condition number. (*Note: Title V permit condition numbers alone are not the underlying applicable requirements*). If an emission limit is calculated based on the type of source and design capacity or if a standard is based on a design parameter, this information should also be included.

R13-1650K §4.1.13; 45CSR §7-3.7:

- Storage structure required to have full enclosure and equipped with PM control devices.

X Permit Shield

For all applicable requirements listed above, provide monitoring/testing/recordkeeping/reporting which shall be used to demonstrate compliance. If the method is based on a permit or rule, include the condition number or citation. (Note: Each requirement listed above must have an associated method of demonstrating compliance. If there is not already a required method in place, then a method must be proposed.)

NA

Are you in compliance with all applicable requirements for this emission unit? X Yes ___No

If no, complete the **Schedule of Compliance Form** as **ATTACHMENT F**.

ATTACHMENT E - Emission Unit Form

Emission Unit Description

Emission unit ID number:	**Emission unit name:**	**List any control devices associated with this emission unit:**
E-7070	CSS-13 Reactor	C4B-M-5430 & C4B-T-1600

Provide a description of the emission unit (type, method of operation, design parameters, etc.):
CSS-13 Reactor

Manufacturer:	**Model number:**	**Serial number:**
NA	NA	NA
Construction date:	**Installation date:**	**Modification date(s):**
NA	1996	NA

Design Capacity (examples: furnaces - tons/hr, tanks - gallons):
2,110 ft^3

Maximum Hourly Throughput:	**Maximum Annual Throughput:**	**Maximum Operating Schedule:**
18,000 lb/hr	78,840 tpy	8,760 hr/yr

Fuel Usage Data **(fill out all applicable fields)**

Does this emission unit combust fuel? ___ Yes X No	**If yes, is it?** ___ Indirect Fired ___ Direct Fired
Maximum design heat input and/or maximum horsepower rating: NA	**Type and Btu/hr rating of burners:** NA

List the primary fuel type(s) and if applicable, the secondary fuel type(s). For each fuel type listed, provide the maximum hourly and annual fuel usage for each.
NA

Describe each fuel expected to be used during the term of the permit.

Fuel Type	Max. Sulfur Content	Max. Ash Content	BTU Value
NA	NA	NA	NA

Emissions Data		
Criteria Pollutants	Potential Emissions	
	PPH	TPY
Carbon Monoxide (CO)	Emissions included with Hot Oil Heater C4B-T-1600.	
Nitrogen Oxides (NO_X)		
Lead (Pb)		
Particulate Matter ($PM_{2.5}$)		
Particulate Matter (PM_{10})		
Total Particulate Matter (TSP)		
Sulfur Dioxide (SO_2)		
Volatile Organic Compounds (VOC)		
Hazardous Air Pollutants	Potential Emissions	
	PPH	TPY
Emissions included with Hot Oil Heater C4B-T-1600.		
Regulated Pollutants other than Criteria and HAP	Potential Emissions	
	PPH	TPY
NA	NA	NA

List the method(s) used to calculate the potential emissions (include dates of any stack tests conducted, versions of software used, source and dates of emission factors, etc.).

Engineering Estimate

Applicable Requirements
List all applicable requirements for this emission unit. For each applicable requirement, include the underlying rule/regulation citation and/or construction permit with the condition number. (*Note: Title V permit condition numbers alone are not the underlying applicable requirements*). If an emission limit is calculated based on the type of source and design capacity or if a standard is based on a design parameter, this information should also be included. NA
X Permit Shield
For all applicable requirements listed above, provide monitoring/testing/recordkeeping/reporting which shall be used to demonstrate compliance. If the method is based on a permit or rule, include the condition number or citation. (Note: Each requirement listed above must have an associated method of demonstrating compliance. If there is not already a required method in place, then a method must be proposed.) NA
Are you in compliance with all applicable requirements for this emission unit? X Yes ___No If no, complete the **Schedule of Compliance Form** as **ATTACHMENT F**.

ATTACHMENT E - Emission Unit Form

Emission Unit Description

Emission unit ID number:	**Emission unit name:**	**List any control devices associated with this emission unit:**
C4C-R-5060/ C4C-E-6320	CSS-13 Reactor & Reheater	C4B-T-1600

Provide a description of the emission unit (type, method of operation, design parameters, etc.):
CSS-13 Reactor & Reheater

Manufacturer:	**Model number:**	**Serial number:**
NA	NA	NA
Construction date:	**Installation date:**	**Modification date(s):**
NA	1996	NA

Design Capacity (examples: furnaces - tons/hr, tanks - gallons):
1,958 ft^3

Maximum Hourly Throughput:	**Maximum Annual Throughput:**	**Maximum Operating Schedule:**
18,000 lb/hr	78,840 tpy	8,760 hr/yr

Fuel Usage Data **(fill out all applicable fields)**

Does this emission unit combust fuel? ___ Yes X No	**If yes, is it?** ___ Indirect Fired ___ Direct Fired
Maximum design heat input and/or maximum horsepower rating: NA	**Type and Btu/hr rating of burners:** NA

List the primary fuel type(s) and if applicable, the secondary fuel type(s). For each fuel type listed, provide the maximum hourly and annual fuel usage for each.
NA

Describe each fuel expected to be used during the term of the permit.

Fuel Type	Max. Sulfur Content	Max. Ash Content	BTU Value
NA	NA	NA	NA

Emissions Data		
Criteria Pollutants	Potential Emissions	
	PPH	TPY
Carbon Monoxide (CO)	Emissions included with Hot Oil Heater C4B-T-1600.	
Nitrogen Oxides (NO_X)		
Lead (Pb)		
Particulate Matter ($PM_{2.5}$)		
Particulate Matter (PM_{10})		
Total Particulate Matter (TSP)		
Sulfur Dioxide (SO_2)		
Volatile Organic Compounds (VOC)		
Hazardous Air Pollutants	Potential Emissions	
	PPH	TPY
Emissions included with Hot Oil Heater C4B-T-1600.		
Regulated Pollutants other than Criteria and HAP	Potential Emissions	
	PPH	TPY
NA	NA	NA

List the method(s) used to calculate the potential emissions (include dates of any stack tests conducted, versions of software used, source and dates of emission factors, etc.).

Engineering Estimate

Applicable Requirements
List all applicable requirements for this emission unit. For each applicable requirement, include the underlying rule/regulation citation and/or construction permit with the condition number. (*Note: Title V permit condition numbers alone are not the underlying applicable requirements*). If an emission limit is calculated based on the type of source and design capacity or if a standard is based on a design parameter, this information should also be included. NA
X Permit Shield
For all applicable requirements listed above, provide monitoring/testing/recordkeeping/reporting which shall be used to demonstrate compliance. If the method is based on a permit or rule, include the condition number or citation. (Note: Each requirement listed above must have an associated method of demonstrating compliance. If there is not already a required method in place, then a method must be proposed.) NA
Are you in compliance with all applicable requirements for this emission unit? X Yes ___No If no, complete the **Schedule of Compliance Form** as **ATTACHMENT F**.

Miscellanous

ATTACHMENT E - Emission Unit Form

Emission Unit Description

Emission unit ID number:	**Emission unit name:**	**List any control devices associated with this emission unit:**
L26-F-6010	Warehouse – West Silo	MWB-F-1080

Provide a description of the emission unit (type, method of operation, design parameters, etc.):
Warehouse – West Silo

Manufacturer:	**Model number:**	**Serial number:**
NA	NA	NA
Construction date:	**Installation date:**	**Modification date(s):**
NA	1994	NA

Design Capacity (examples: furnaces - tons/hr, tanks - gallons):
750 ft^3

Maximum Hourly Throughput:	**Maximum Annual Throughput:**	**Maximum Operating Schedule:**
NA	NA	8,760 hr/yr

Fuel Usage Data **(fill out all applicable fields)**

Does this emission unit combust fuel? ___ Yes X No	**If yes, is it?** ___ Indirect Fired ___Direct Fired
Maximum design heat input and/or maximum horsepower rating: NA	**Type and Btu/hr rating of burners:** NA

List the primary fuel type(s) and if applicable, the secondary fuel type(s). For each fuel type listed, provide the maximum hourly and annual fuel usage for each.
NA

Describe each fuel expected to be used during the term of the permit.

Fuel Type	Max. Sulfur Content	Max. Ash Content	BTU Value
NA	NA	NA	NA

Emissions Data		
Criteria Pollutants	Potential Emissions	
	PPH	TPY
Carbon Monoxide (CO)	NA	NA
Nitrogen Oxides (NO_X)	NA	NA
Lead (Pb)	NA	NA
Particulate Matter ($PM_{2.5}$)	<0.001	0.004
Particulate Matter (PM_{10})	<0.001	0.004
Total Particulate Matter (TSP)	NA	NA
Sulfur Dioxide (SO_2)	NA	NA
Volatile Organic Compounds (VOC)	NA	NA
Hazardous Air Pollutants	Potential Emissions	
	PPH	TPY
NA	NA	NA
Regulated Pollutants other than Criteria and HAP	Potential Emissions	
	PPH	TPY
NA	NA	NA

List the method(s) used to calculate the potential emissions (include dates of any stack tests conducted, versions of software used, source and dates of emission factors, etc.).

Engineering Estimate

Applicable Requirements

List all applicable requirements for this emission unit. For each applicable requirement, include the underlying rule/regulation citation and/or construction permit with the condition number. (*Note: Title V permit condition numbers alone are not the underlying applicable requirements*). If an emission limit is calculated based on the type of source and design capacity or if a standard is based on a design parameter, this information should also be included.

R13-1650K §4.1.13; 45CSR §7-3.7:

- Storage structure required to have full enclosure and equipped with PM control devices.

X Permit Shield

For all applicable requirements listed above, provide monitoring/testing/recordkeeping/reporting which shall be used to demonstrate compliance. If the method is based on a permit or rule, include the condition number or citation. (Note: Each requirement listed above must have an associated method of demonstrating compliance. If there is not already a required method in place, then a method must be proposed.)

NA

Are you in compliance with all applicable requirements for this emission unit? X Yes ___No

If no, complete the **Schedule of Compliance Form** as **ATTACHMENT F**.

ATTACHMENT E - Emission Unit Form

Emission Unit Description

Emission unit ID number:	**Emission unit name:**	**List any control devices associated with this emission unit:**
MW11717	Warehouse Railcar Unloading System	NA

Provide a description of the emission unit (type, method of operation, design parameters, etc.):
Warehouse – West Silo

Manufacturer:	**Model number:**	**Serial number:**
NA	NA	NA
Construction date:	**Installation date:**	**Modification date(s):**
NA	1976	NA

Design Capacity (examples: furnaces - tons/hr, tanks - gallons):
NA

Maximum Hourly Throughput:	**Maximum Annual Throughput:**	**Maximum Operating Schedule:**
NA	NA	8,760 hr/yr

Fuel Usage Data **(fill out all applicable fields)**

Does this emission unit combust fuel? ___ Yes X No	**If yes, is it?** ___ Indirect Fired ___Direct Fired
Maximum design heat input and/or maximum horsepower rating: NA	**Type and Btu/hr rating of burners:** NA

List the primary fuel type(s) and if applicable, the secondary fuel type(s). For each fuel type listed, provide the maximum hourly and annual fuel usage for each.
NA

Describe each fuel expected to be used during the term of the permit.

Fuel Type	Max. Sulfur Content	Max. Ash Content	BTU Value
NA	NA	NA	NA

Emissions Data		
Criteria Pollutants	Potential Emissions	
	PPH	TPY
Carbon Monoxide (CO)	NA	NA
Nitrogen Oxides (NO_X)	NA	NA
Lead (Pb)	NA	NA
Particulate Matter ($PM_{2.5}$)	<0.001	<0.001
Particulate Matter (PM_{10})	<0.001	<0.001
Total Particulate Matter (TSP)	NA	NA
Sulfur Dioxide (SO_2)	NA	NA
Volatile Organic Compounds (VOC)	NA	NA
Hazardous Air Pollutants	Potential Emissions	
	PPH	TPY
NA	NA	NA
Regulated Pollutants other than Criteria and HAP	Potential Emissions	
	PPH	TPY
NA	NA	NA

List the method(s) used to calculate the potential emissions (include dates of any stack tests conducted, versions of software used, source and dates of emission factors, etc.).

Engineering Estimate

Applicable Requirements
List all applicable requirements for this emission unit. For each applicable requirement, include the underlying rule/regulation citation and/or construction permit with the condition number. (*Note: Title V permit condition numbers alone are not the underlying applicable requirements*). If an emission limit is calculated based on the type of source and design capacity or if a standard is based on a design parameter, this information should also be included. NA
X Permit Shield
For all applicable requirements listed above, provide monitoring/testing/recordkeeping/reporting which shall be used to demonstrate compliance. If the method is based on a permit or rule, include the condition number or citation. (Note: Each requirement listed above must have an associated method of demonstrating compliance. If there is not already a required method in place, then a method must be proposed.) NA
Are you in compliance with all applicable requirements for this emission unit? X Yes ___No If no, complete the **Schedule of Compliance Form** as **ATTACHMENT F**.

Utilities

ATTACHMENT E - Emission Unit Form

Emission Unit Description

Emission unit ID number:	**Emission unit name:**	**List any control devices associated with this emission unit:**
UGS-B-4001	CP-2 A/C Space Heater	NA

Provide a description of the emission unit (type, method of operation, design parameters, etc.):
CP-2 A/C Space Heater

Manufacturer:	**Model number:**	**Serial number:**
Reznor	UEAS-260	NA
Construction date:	**Installation date:**	**Modification date(s):**
NA	2009	NA

Design Capacity (examples: furnaces - tons/hr, tanks - gallons):
0.26 mmBtu/hr

Maximum Hourly Throughput:	**Maximum Annual Throughput:**	**Maximum Operating Schedule:**
250 scf/hr	2.16 mmscf/yr	8,760 hr/yr

Fuel Usage Data **(fill out all applicable fields)**

Does this emission unit combust fuel? X Yes ___ No	**If yes, is it?** ___ Indirect Fired X Direct Fired
Maximum design heat input and/or maximum horsepower rating: 0.26 mmBtu/hr	**Type and Btu/hr rating of burners:** 0.26 mmBtu/hr

List the primary fuel type(s) and if applicable, the secondary fuel type(s). For each fuel type listed, provide the maximum hourly and annual fuel usage for each.
Natural Gas - 250 scf/hr, 2.16 mmscf/yr

Describe each fuel expected to be used during the term of the permit.

Fuel Type	Max. Sulfur Content	Max. Ash Content	BTU Value
Natural Gas	0.01 wt%	NA	960 Btu/sfc

Emissions Data		
Criteria Pollutants	Potential Emissions	
	PPH	TPY
Carbon Monoxide (CO)	0.01	0.044
Nitrogen Oxides (NO_X)	0.024	0.11
Lead (Pb)	NA	NA
Particulate Matter ($PM_{2.5}$)	NA	NA
Particulate Matter (PM_{10})	0.002	0.009
Total Particulate Matter (TSP)	0.002	0.009
Sulfur Dioxide (SO_2)	<0.001	0.001
Volatile Organic Compounds (VOC)	0.001	0.006
Hazardous Air Pollutants	Potential Emissions	
	PPH	TPY
NA	NA	NA
Regulated Pollutants other than Criteria and HAP	Potential Emissions	
	PPH	TPY
NA	NA	NA

List the method(s) used to calculate the potential emissions (include dates of any stack tests conducted, versions of software used, source and dates of emission factors, etc.).

Engineering Estimate

Applicable Requirements

List all applicable requirements for this emission unit. For each applicable requirement, include the underlying rule/regulation citation and/or construction permit with the condition number. (*Note: Title V permit condition numbers alone are not the underlying applicable requirements*). If an emission limit is calculated based on the type of source and design capacity or if a standard is based on a design parameter, this information should also be included.

R13-1650K §4.1.9:

- Limited to maximum designed heat input rate.

X Permit Shield

For all applicable requirements listed above, provide monitoring/testing/recordkeeping/reporting which shall be used to demonstrate compliance. If the method is based on a permit or rule, include the condition number or citation. (Note: Each requirement listed above must have an associated method of demonstrating compliance. If there is not already a required method in place, then a method must be proposed.)

Monitoring:

- Hourly and annual fuel consumption rate.

Are you in compliance with all applicable requirements for this emission unit? X Yes ___No

If no, complete the **Schedule of Compliance Form** as **ATTACHMENT F**.

ATTACHMENT E - Emission Unit Form

Emission Unit Description

Emission unit ID number:	**Emission unit name:**	**List any control devices associated with this emission unit:**
UGS-B-2010	WWTP Portable Boiler	NA

Provide a description of the emission unit (type, method of operation, design parameters, etc.):
WWTP Portable Boiler

Manufacturer:	**Model number:**	**Serial number:**
York Shipley	SPHV150N2	NA
Construction date:	**Installation date:**	**Modification date(s):**
NA	2009	NA

Design Capacity (examples: furnaces - tons/hr, tanks - gallons):
4.19 mmBtu/hr

Maximum Hourly Throughput:	**Maximum Annual Throughput:**	**Maximum Operating Schedule:**
4,029 scf/hr	35.3 mmscf/yr	8,760 hr/yr

Fuel Usage Data **(fill out all applicable fields)**

Does this emission unit combust fuel? X Yes ___ No	**If yes, is it?** ___ Indirect Fired X Direct Fired
Maximum design heat input and/or maximum horsepower rating: 4.19 mmBtu/hr	**Type and Btu/hr rating of burners:** 4.19 mmBtu/hr

List the primary fuel type(s) and if applicable, the secondary fuel type(s). For each fuel type listed, provide the maximum hourly and annual fuel usage for each.
Natural Gas – 4,029 scf/hr, 35.3 mmscf/yr

Describe each fuel expected to be used during the term of the permit.

Fuel Type	Max. Sulfur Content	Max. Ash Content	BTU Value
Natural Gas	0.01 wt%	NA	960 Btu/sfc

Emissions Data		
Criteria Pollutants	Potential Emissions	
	PPH	TPY
Carbon Monoxide (CO)	0.34	1.51
Nitrogen Oxides (NO_X)	0.41	0.80
Lead (Pb)	NA	NA
Particulate Matter ($PM_{2.5}$)	NA	NA
Particulate Matter (PM_{10})	0.03	0.14
Total Particulate Matter (TSP)	0.03	0.14
Sulfur Dioxide (SO_2)	0.003	0.011
Volatile Organic Compounds (VOC)	0.02	0.10
Hazardous Air Pollutants	Potential Emissions	
	PPH	TPY
NA	NA	NA
Regulated Pollutants other than Criteria and HAP	Potential Emissions	
	PPH	TPY
NA	NA	NA

List the method(s) used to calculate the potential emissions (include dates of any stack tests conducted, versions of software used, source and dates of emission factors, etc.).

Engineering Estimate

Applicable Requirements

List all applicable requirements for this emission unit. For each applicable requirement, include the underlying rule/regulation citation and/or construction permit with the condition number. (*Note: Title V permit condition numbers alone are not the underlying applicable requirements*). If an emission limit is calculated based on the type of source and design capacity or if a standard is based on a design parameter, this information should also be included.

R13-1650K §4.1.9:

- Limited to maximum designed heat input rate.

X Permit Shield

For all applicable requirements listed above, provide monitoring/testing/recordkeeping/reporting which shall be used to demonstrate compliance. If the method is based on a permit or rule, include the condition number or citation. (Note: Each requirement listed above must have an associated method of demonstrating compliance. If there is not already a required method in place, then a method must be proposed.)

Monitoring:

- Hourly and annual fuel consumption rate.

Are you in compliance with all applicable requirements for this emission unit? X Yes ___No

If no, complete the **Schedule of Compliance Form** as **ATTACHMENT F**.

ATTACHMENT E - Emission Unit Form

Emission Unit Description

Emission unit ID number:	**Emission unit name:**	**List any control devices associated with this emission unit:**
UGS-B-4002	CP-2 A/C Space Heater	NA

Provide a description of the emission unit (type, method of operation, design parameters, etc.):
CP-2 A/C Space Heater

Manufacturer:	**Model number:**	**Serial number:**
Reznor	UEAS-260	NA
Construction date:	**Installation date:**	**Modification date(s):**
NA	2009	NA

Design Capacity (examples: furnaces - tons/hr, tanks - gallons):
0.26 mmBtu/hr

Maximum Hourly Throughput:	**Maximum Annual Throughput:**	**Maximum Operating Schedule:**
250 scf/hr	2.16 mmscf/yr	8,760 hr/yr

Fuel Usage Data **(fill out all applicable fields)**

Does this emission unit combust fuel? X Yes ___ No	**If yes, is it?** ___ Indirect Fired X Direct Fired
Maximum design heat input and/or maximum horsepower rating: 0.26 mmBtu/hr	**Type and Btu/hr rating of burners:** 0.26 mmBtu/hr

List the primary fuel type(s) and if applicable, the secondary fuel type(s). For each fuel type listed, provide the maximum hourly and annual fuel usage for each.
Natural Gas - 250 scf/hr, 2.16 mmscf/yr

Describe each fuel expected to be used during the term of the permit.

Fuel Type	Max. Sulfur Content	Max. Ash Content	BTU Value
Natural Gas	0.01 wt%	NA	960 Btu/sfc

Emissions Data		
Criteria Pollutants	Potential Emissions	
	PPH	TPY
Carbon Monoxide (CO)	0.01	0.05
Nitrogen Oxides (NO_X)	0.03	0.11
Lead (Pb)	NA	NA
Particulate Matter ($PM_{2.5}$)	NA	NA
Particulate Matter (PM_{10})	0.002	0.01
Total Particulate Matter (TSP)	0.002	0.01
Sulfur Dioxide (SO_2)	<0.001	0.001
Volatile Organic Compounds (VOC)	0.001	0.006
Hazardous Air Pollutants	Potential Emissions	
	PPH	TPY
NA	NA	NA
Regulated Pollutants other than Criteria and HAP	Potential Emissions	
	PPH	TPY
NA	NA	NA

List the method(s) used to calculate the potential emissions (include dates of any stack tests conducted, versions of software used, source and dates of emission factors, etc.).

Engineering Estimate

Applicable Requirements

List all applicable requirements for this emission unit. For each applicable requirement, include the underlying rule/regulation citation and/or construction permit with the condition number. (*Note: Title V permit condition numbers alone are not the underlying applicable requirements*). If an emission limit is calculated based on the type of source and design capacity or if a standard is based on a design parameter, this information should also be included.

R13-1650K §4.1.9:

- Limited to maximum designed heat input rate.

X Permit Shield

For all applicable requirements listed above, provide monitoring/testing/recordkeeping/reporting which shall be used to demonstrate compliance. If the method is based on a permit or rule, include the condition number or citation. (Note: Each requirement listed above must have an associated method of demonstrating compliance. If there is not already a required method in place, then a method must be proposed.)

Monitoring:

- Hourly and annual fuel consumption rate.

Are you in compliance with all applicable requirements for this emission unit? X Yes ___No

If no, complete the **Schedule of Compliance Form** as **ATTACHMENT F**.

ATTACHMENT E - Emission Unit Form

Emission Unit Description

Emission unit ID number:	**Emission unit name:**	**List any control devices associated with this emission unit:**
UGS-B-4010	CP-2 Ops Center Hot Water Boiler	NA

Provide a description of the emission unit (type, method of operation, design parameters, etc.):
CP-2 Ops Center Hot Water Boiler

Manufacturer:	**Model number:**	**Serial number:**
Triad Boiler Systems	GPS-1600-SH	NA
Construction date:	**Installation date:**	**Modification date(s):**
NA	2009	NA

Design Capacity (examples: furnaces - tons/hr, tanks - gallons):
1.6 mmBtu/hr

Maximum Hourly Throughput:	**Maximum Annual Throughput:**	**Maximum Operating Schedule:**
1,538 scf/hr	13.477 mmscf/yr	8,760 hr/yr

Fuel Usage Data **(fill out all applicable fields)**

Does this emission unit combust fuel? X Yes ___ No	**If yes, is it?** ___ Indirect Fired X Direct Fired
Maximum design heat input and/or maximum horsepower rating: 1.6 mmBtu/hr	**Type and Btu/hr rating of burners:** 1.6 mmBtu/hr

List the primary fuel type(s) and if applicable, the secondary fuel type(s). For each fuel type listed, provide the maximum hourly and annual fuel usage for each.
Natural Gas – 1,538 scf/hr, 13.477 mmscf/yr

Describe each fuel expected to be used during the term of the permit.

Fuel Type	Max. Sulfur Content	Max. Ash Content	BTU Value
Natural Gas	0.01 wt%	NA	960 Btu/sfc

Emissions Data		
Criteria Pollutants	Potential Emissions	
	PPH	TPY
Carbon Monoxide (CO)	0.13	0.58
Nitrogen Oxides (NO_X)	0.16	0.69
Lead (Pb)	NA	NA
Particulate Matter ($PM_{2.5}$)	NA	NA
Particulate Matter (PM_{10})	0.012	0.06
Total Particulate Matter (TSP)	0.012	0.06
Sulfur Dioxide (SO_2)	0.001	0.004
Volatile Organic Compounds (VOC)	0.008	0.04
Hazardous Air Pollutants	Potential Emissions	
	PPH	TPY
NA	NA	NA
Regulated Pollutants other than Criteria and HAP	Potential Emissions	
	PPH	TPY
NA	NA	NA

List the method(s) used to calculate the potential emissions (include dates of any stack tests conducted, versions of software used, source and dates of emission factors, etc.).

Engineering Estimate

Applicable Requirements

List all applicable requirements for this emission unit. For each applicable requirement, include the underlying rule/regulation citation and/or construction permit with the condition number. (*Note: Title V permit condition numbers alone are not the underlying applicable requirements*). If an emission limit is calculated based on the type of source and design capacity or if a standard is based on a design parameter, this information should also be included.

R13-1650K §4.1.9:

- Limited to maximum designed heat input rate.

X Permit Shield

For all applicable requirements listed above, provide monitoring/testing/recordkeeping/reporting which shall be used to demonstrate compliance. If the method is based on a permit or rule, include the condition number or citation. (Note: Each requirement listed above must have an associated method of demonstrating compliance. If there is not already a required method in place, then a method must be proposed.)

Monitoring:

- Hourly and annual fuel consumption rate.

Are you in compliance with all applicable requirements for this emission unit? X Yes ___No

If no, complete the **Schedule of Compliance Form** as **ATTACHMENT F**.

ATTACHMENT E - Emission Unit Form

Emission Unit Description

Emission unit ID number:	**Emission unit name:**	**List any control devices associated with this emission unit:**
UGS-B-4011	CP-2 Ops Center Hot Water Boiler	NA

Provide a description of the emission unit (type, method of operation, design parameters, etc.):
CP-2 Ops Center Hot Water Boiler

Manufacturer:	**Model number:**	**Serial number:**
Triad Boiler Systems	GPS-1600-SH	NA
Construction date:	**Installation date:**	**Modification date(s):**
NA	2009	NA

Design Capacity (examples: furnaces - tons/hr, tanks - gallons):
1.6 mmBtu/hr

Maximum Hourly Throughput:	**Maximum Annual Throughput:**	**Maximum Operating Schedule:**
1,538 scf/hr	13.477 mmscf/yr	8,760 hr/yr

Fuel Usage Data **(fill out all applicable fields)**

Does this emission unit combust fuel? X Yes ___ No	**If yes, is it?** ___ Indirect Fired X Direct Fired
Maximum design heat input and/or maximum horsepower rating: 1.6 mmBtu/hr	**Type and Btu/hr rating of burners:** 1.6 mmBtu/hr

List the primary fuel type(s) and if applicable, the secondary fuel type(s). For each fuel type listed, provide the maximum hourly and annual fuel usage for each.
Natural Gas – 1,538 scf/hr, 13.477 mmscf/yr

Describe each fuel expected to be used during the term of the permit.

Fuel Type	Max. Sulfur Content	Max. Ash Content	BTU Value
Natural Gas	0.01 wt%	NA	960 Btu/sfc

Emissions Data		
Criteria Pollutants	Potential Emissions	
	PPH	TPY
Carbon Monoxide (CO)	0.13	0.58
Nitrogen Oxides (NO_X)	0.16	0.69
Lead (Pb)	NA	NA
Particulate Matter ($PM_{2.5}$)	NA	NA
Particulate Matter (PM_{10})	0.012	0.06
Total Particulate Matter (TSP)	0.012	0.06
Sulfur Dioxide (SO_2)	0.001	0.004
Volatile Organic Compounds (VOC)	0.008	0.04
Hazardous Air Pollutants	Potential Emissions	
	PPH	TPY
NA	NA	NA
Regulated Pollutants other than Criteria and HAP	Potential Emissions	
	PPH	TPY
NA	NA	NA

List the method(s) used to calculate the potential emissions (include dates of any stack tests conducted, versions of software used, source and dates of emission factors, etc.).

Engineering Estimate

Applicable Requirements

List all applicable requirements for this emission unit. For each applicable requirement, include the underlying rule/regulation citation and/or construction permit with the condition number. (*Note: Title V permit condition numbers alone are not the underlying applicable requirements*). If an emission limit is calculated based on the type of source and design capacity or if a standard is based on a design parameter, this information should also be included.

R13-1650K §4.1.9:

- Limited to maximum designed heat input rate.

X Permit Shield

For all applicable requirements listed above, provide monitoring/testing/recordkeeping/reporting which shall be used to demonstrate compliance. If the method is based on a permit or rule, include the condition number or citation. (Note: Each requirement listed above must have an associated method of demonstrating compliance. If there is not already a required method in place, then a method must be proposed.)

Monitoring:

- Hourly and annual fuel consumption rate.

Are you in compliance with all applicable requirements for this emission unit? X Yes ___No

If no, complete the **Schedule of Compliance Form** as **ATTACHMENT F**.

ATTACHMENT E - Emission Unit Form

Emission Unit Description

Emission unit ID number:	**Emission unit name:**	**List any control devices associated with this emission unit:**
UGS-B-1050	D-155 Space Heater	NA

Provide a description of the emission unit (type, method of operation, design parameters, etc.):
D-155 Space Heater

Manufacturer:	**Model number:**	**Serial number:**
Reznor	UEAS-260	NA
Construction date:	**Installation date:**	**Modification date(s):**
NA	2009	NA

Design Capacity (examples: furnaces - tons/hr, tanks - gallons):
0.26 mmBtu/hr

Maximum Hourly Throughput:	**Maximum Annual Throughput:**	**Maximum Operating Schedule:**
250 scf/hr	2.16 mmscf/yr	8,760 hr/yr

Fuel Usage Data **(fill out all applicable fields)**

Does this emission unit combust fuel? X Yes ___ No	**If yes, is it?** ___ Indirect Fired X Direct Fired
Maximum design heat input and/or maximum horsepower rating: 0.26 mmBtu/hr	**Type and Btu/hr rating of burners:** 0.26 mmBtu/hr

List the primary fuel type(s) and if applicable, the secondary fuel type(s). For each fuel type listed, provide the maximum hourly and annual fuel usage for each.
Natural Gas - 250 scf/hr, 2.16 mmscf/yr

Describe each fuel expected to be used during the term of the permit.

Fuel Type	Max. Sulfur Content	Max. Ash Content	BTU Value
Natural Gas	0.01 wt%	NA	960 Btu/sfc

Emissions Data		
Criteria Pollutants	Potential Emissions	
	PPH	TPY
Carbon Monoxide (CO)	0.01	0.05
Nitrogen Oxides (NO_X)	0.03	0.11
Lead (Pb)	NA	NA
Particulate Matter ($PM_{2.5}$)	NA	NA
Particulate Matter (PM_{10})	0.002	0.01
Total Particulate Matter (TSP)	0.002	0.01
Sulfur Dioxide (SO_2)	<0.001	0.001
Volatile Organic Compounds (VOC)	0.001	0.006
Hazardous Air Pollutants	Potential Emissions	
	PPH	TPY
NA	NA	NA
Regulated Pollutants other than Criteria and HAP	Potential Emissions	
	PPH	TPY
NA	NA	NA

List the method(s) used to calculate the potential emissions (include dates of any stack tests conducted, versions of software used, source and dates of emission factors, etc.).

Engineering Estimate

Applicable Requirements

List all applicable requirements for this emission unit. For each applicable requirement, include the underlying rule/regulation citation and/or construction permit with the condition number. (*Note: Title V permit condition numbers alone are not the underlying applicable requirements*). If an emission limit is calculated based on the type of source and design capacity or if a standard is based on a design parameter, this information should also be included.

R13-1650K §4.1.9:

- Limited to maximum designed heat input rate.

X Permit Shield

For all applicable requirements listed above, provide monitoring/testing/recordkeeping/reporting which shall be used to demonstrate compliance. If the method is based on a permit or rule, include the condition number or citation. (Note: Each requirement listed above must have an associated method of demonstrating compliance. If there is not already a required method in place, then a method must be proposed.)

Monitoring:

- Hourly and annual fuel consumption rate.

Are you in compliance with all applicable requirements for this emission unit? X Yes ___No

If no, complete the **Schedule of Compliance Form** as **ATTACHMENT F**.

ATTACHMENT E - Emission Unit Form

Emission Unit Description

Emission unit ID number:	**Emission unit name:**	**List any control devices associated with this emission unit:**
UGS-B-1060	D-155 Space Heater	NA

Provide a description of the emission unit (type, method of operation, design parameters, etc.):
D-155 Space Heater

Manufacturer:	**Model number:**	**Serial number:**
Reznor	UEAS-260	NA
Construction date:	**Installation date:**	**Modification date(s):**
NA	2009	NA

Design Capacity (examples: furnaces - tons/hr, tanks - gallons):
0.26 mmBtu/hr

Maximum Hourly Throughput:	**Maximum Annual Throughput:**	**Maximum Operating Schedule:**
250 scf/hr	2.16 mmscf/yr	8,760 hr/yr

Fuel Usage Data **(fill out all applicable fields)**

Does this emission unit combust fuel? X Yes ___ No	**If yes, is it?** ___ Indirect Fired X Direct Fired
Maximum design heat input and/or maximum horsepower rating: 0.26 mmBtu/hr	**Type and Btu/hr rating of burners:** 0.26 mmBtu/hr

List the primary fuel type(s) and if applicable, the secondary fuel type(s). For each fuel type listed, provide the maximum hourly and annual fuel usage for each.
Natural Gas - 250 scf/hr, 2.16 mmscf/yr

Describe each fuel expected to be used during the term of the permit.

Fuel Type	Max. Sulfur Content	Max. Ash Content	BTU Value
Natural Gas	0.01 wt%	NA	960 Btu/sfc

Emissions Data		
Criteria Pollutants	Potential Emissions	
	PPH	TPY
Carbon Monoxide (CO)	0.01	0.05
Nitrogen Oxides (NO_X)	0.03	0.11
Lead (Pb)	NA	NA
Particulate Matter ($PM_{2.5}$)	NA	NA
Particulate Matter (PM_{10})	0.002	0.01
Total Particulate Matter (TSP)	0.002	0.01
Sulfur Dioxide (SO_2)	<0.001	0.001
Volatile Organic Compounds (VOC)	0.001	0.006
Hazardous Air Pollutants	Potential Emissions	
	PPH	TPY
NA	NA	NA
Regulated Pollutants other than Criteria and HAP	Potential Emissions	
	PPH	TPY
NA	NA	NA

List the method(s) used to calculate the potential emissions (include dates of any stack tests conducted, versions of software used, source and dates of emission factors, etc.).

Engineering Estimate

Applicable Requirements

List all applicable requirements for this emission unit. For each applicable requirement, include the underlying rule/regulation citation and/or construction permit with the condition number. (*Note: Title V permit condition numbers alone are not the underlying applicable requirements*). If an emission limit is calculated based on the type of source and design capacity or if a standard is based on a design parameter, this information should also be included.

R13-1650K §4.1.9:

- Limited to maximum designed heat input rate.

X Permit Shield

For all applicable requirements listed above, provide monitoring/testing/recordkeeping/reporting which shall be used to demonstrate compliance. If the method is based on a permit or rule, include the condition number or citation. (Note: Each requirement listed above must have an associated method of demonstrating compliance. If there is not already a required method in place, then a method must be proposed.)

Monitoring:

- Hourly and annual fuel consumption rate.

Are you in compliance with all applicable requirements for this emission unit? X Yes ___No

If no, complete the **Schedule of Compliance Form** as **ATTACHMENT F**.

ATTACHMENT E - Emission Unit Form

Emission Unit Description

Emission unit ID number:	**Emission unit name:**	**List any control devices associated with this emission unit:**
UGS-B-3010	Front Office Hot Water Boiler	NA

Provide a description of the emission unit (type, method of operation, design parameters, etc.):
Front Office Hot Water Boiler

Manufacturer:	**Model number:**	**Serial number:**
Triad Boiler Systems	GPS-1600-SH	NA
Construction date:	**Installation date:**	**Modification date(s):**
NA	2009	NA

Design Capacity (examples: furnaces - tons/hr, tanks - gallons):
0.9 mmBtu/hr

Maximum Hourly Throughput:	**Maximum Annual Throughput:**	**Maximum Operating Schedule:**
865.4 scf/hr	7.58 mmscf/yr	8,760 hr/yr

Fuel Usage Data **(fill out all applicable fields)**

Does this emission unit combust fuel? X Yes ___ No	**If yes, is it?** ___ Indirect Fired X Direct Fired
Maximum design heat input and/or maximum horsepower rating: 0.9 mmBtu/hr	**Type and Btu/hr rating of burners:** 0.9 mmBtu/hr

List the primary fuel type(s) and if applicable, the secondary fuel type(s). For each fuel type listed, provide the maximum hourly and annual fuel usage for each.
Natural Gas – 865.4 scf/hr, 7.58 mmscf/yr

Describe each fuel expected to be used during the term of the permit.

Fuel Type	Max. Sulfur Content	Max. Ash Content	BTU Value
Natural Gas	0.01 wt%	NA	960 Btu/sfc

Emissions Data		
Criteria Pollutants	Potential Emissions	
	PPH	TPY
Carbon Monoxide (CO)	0.08	0.33
Nitrogen Oxides (NO_X)	0.09	0.39
Lead (Pb)	NA	NA
Particulate Matter ($PM_{2.5}$)	NA	NA
Particulate Matter (PM_{10})	0.007	0.03
Total Particulate Matter (TSP)	0.007	0.03
Sulfur Dioxide (SO_2)	<0.001	0.002
Volatile Organic Compounds (VOC)	0.005	0.02
Hazardous Air Pollutants	Potential Emissions	
	PPH	TPY
NA	NA	NA
Regulated Pollutants other than Criteria and HAP	Potential Emissions	
	PPH	TPY
NA	NA	NA

List the method(s) used to calculate the potential emissions (include dates of any stack tests conducted, versions of software used, source and dates of emission factors, etc.).

Engineering Estimate

Applicable Requirements

List all applicable requirements for this emission unit. For each applicable requirement, include the underlying rule/regulation citation and/or construction permit with the condition number. (*Note: Title V permit condition numbers alone are not the underlying applicable requirements*). If an emission limit is calculated based on the type of source and design capacity or if a standard is based on a design parameter, this information should also be included.

R13-1650K §4.1.9:

- Limited to maximum designed heat input rate.

X Permit Shield

For all applicable requirements listed above, provide monitoring/testing/recordkeeping/reporting which shall be used to demonstrate compliance. If the method is based on a permit or rule, include the condition number or citation. (Note: Each requirement listed above must have an associated method of demonstrating compliance. If there is not already a required method in place, then a method must be proposed.)

Monitoring:

- Hourly and annual fuel consumption rate.

Are you in compliance with all applicable requirements for this emission unit? X Yes ___No

If no, complete the **Schedule of Compliance Form** as **ATTACHMENT F**.

ATTACHMENT E - Emission Unit Form

Emission Unit Description

Emission unit ID number:	**Emission unit name:**	**List any control devices associated with this emission unit:**
UGS-B-3011	Front Office Hot Water Boiler	NA

Provide a description of the emission unit (type, method of operation, design parameters, etc.):
Front Office Hot Water Boiler

Manufacturer:	**Model number:**	**Serial number:**
Triad Boiler Systems	GPS-1600-SH	NA
Construction date:	**Installation date:**	**Modification date(s):**
NA	2009	NA

Design Capacity (examples: furnaces - tons/hr, tanks - gallons):
0.9 mmBtu/hr

Maximum Hourly Throughput:	**Maximum Annual Throughput:**	**Maximum Operating Schedule:**
865.4 scf/hr	7.58 mmscf/yr	8,760 hr/yr

Fuel Usage Data **(fill out all applicable fields)**

Does this emission unit combust fuel? X Yes ___ No	**If yes, is it?** ___ Indirect Fired X Direct Fired
Maximum design heat input and/or maximum horsepower rating: 0.9 mmBtu/hr	**Type and Btu/hr rating of burners:** 0.9 mmBtu/hr

List the primary fuel type(s) and if applicable, the secondary fuel type(s). For each fuel type listed, provide the maximum hourly and annual fuel usage for each.
Natural Gas – 865.4 scf/hr, 7.58 mmscf/yr

Describe each fuel expected to be used during the term of the permit.

Fuel Type	Max. Sulfur Content	Max. Ash Content	BTU Value
Natural Gas	0.01 wt%	NA	960 Btu/sfc

Emissions Data		
Criteria Pollutants	Potential Emissions	
	PPH	TPY
Carbon Monoxide (CO)	0.08	0.33
Nitrogen Oxides (NO_X)	0.09	0.39
Lead (Pb)	NA	NA
Particulate Matter ($PM_{2.5}$)	NA	NA
Particulate Matter (PM_{10})	0.007	0.03
Total Particulate Matter (TSP)	0.007	0.03
Sulfur Dioxide (SO_2)	<0.001	0.002
Volatile Organic Compounds (VOC)	0.005	0.02
Hazardous Air Pollutants	Potential Emissions	
	PPH	TPY
NA	NA	NA
Regulated Pollutants other than Criteria and HAP	Potential Emissions	
	PPH	TPY
NA	NA	NA

List the method(s) used to calculate the potential emissions (include dates of any stack tests conducted, versions of software used, source and dates of emission factors, etc.).

Engineering Estimate

Applicable Requirements

List all applicable requirements for this emission unit. For each applicable requirement, include the underlying rule/regulation citation and/or construction permit with the condition number. (*Note: Title V permit condition numbers alone are not the underlying applicable requirements*). If an emission limit is calculated based on the type of source and design capacity or if a standard is based on a design parameter, this information should also be included.

R13-1650K §4.1.9:

- Limited to maximum designed heat input rate.

X Permit Shield

For all applicable requirements listed above, provide monitoring/testing/recordkeeping/reporting which shall be used to demonstrate compliance. If the method is based on a permit or rule, include the condition number or citation. (Note: Each requirement listed above must have an associated method of demonstrating compliance. If there is not already a required method in place, then a method must be proposed.)

Monitoring:

- Hourly and annual fuel consumption rate.

Are you in compliance with all applicable requirements for this emission unit? X Yes ___No

If no, complete the **Schedule of Compliance Form** as **ATTACHMENT F**.

ATTACHMENT E - Emission Unit Form

Emission Unit Description

Emission unit ID number:	**Emission unit name:**	**List any control devices associated with this emission unit:**
UGS-B-4003	Utility Space Heater	NA

Provide a description of the emission unit (type, method of operation, design parameters, etc.):
Utility Space Heater

Manufacturer:	**Model number:**	**Serial number:**
Reznor	UEAS-260	NA
Construction date:	**Installation date:**	**Modification date(s):**
NA	2009	NA

Design Capacity (examples: furnaces - tons/hr, tanks - gallons):
0.26 mmBtu/hr

Maximum Hourly Throughput:	**Maximum Annual Throughput:**	**Maximum Operating Schedule:**
250 scf/hr	2.16 mmscf/yr	8,760 hr/yr

Fuel Usage Data **(fill out all applicable fields)**

Does this emission unit combust fuel? X Yes ___ No	**If yes, is it?** ___ Indirect Fired X Direct Fired
Maximum design heat input and/or maximum horsepower rating: 0.26 mmBtu/hr	**Type and Btu/hr rating of burners:** 0.26 mmBtu/hr

List the primary fuel type(s) and if applicable, the secondary fuel type(s). For each fuel type listed, provide the maximum hourly and annual fuel usage for each.
Natural Gas - 250 scf/hr, 2.16 mmscf/yr

Describe each fuel expected to be used during the term of the permit.

Fuel Type	Max. Sulfur Content	Max. Ash Content	BTU Value
Natural Gas	0.01 wt%	NA	960 Btu/sfc

Emissions Data		
Criteria Pollutants	Potential Emissions	
	PPH	TPY
Carbon Monoxide (CO)	0.01	0.05
Nitrogen Oxides (NO_X)	0.03	0.11
Lead (Pb)	NA	NA
Particulate Matter ($PM_{2.5}$)	NA	NA
Particulate Matter (PM_{10})	0.002	0.01
Total Particulate Matter (TSP)	0.002	0.01
Sulfur Dioxide (SO_2)	<0.001	0.001
Volatile Organic Compounds (VOC)	0.001	0.006
Hazardous Air Pollutants	Potential Emissions	
	PPH	TPY
NA	NA	NA
Regulated Pollutants other than Criteria and HAP	Potential Emissions	
	PPH	TPY
NA	NA	NA

List the method(s) used to calculate the potential emissions (include dates of any stack tests conducted, versions of software used, source and dates of emission factors, etc.).

Engineering Estimate

Applicable Requirements

List all applicable requirements for this emission unit. For each applicable requirement, include the underlying rule/regulation citation and/or construction permit with the condition number. (*Note: Title V permit condition numbers alone are not the underlying applicable requirements*). If an emission limit is calculated based on the type of source and design capacity or if a standard is based on a design parameter, this information should also be included.

R13-1650K §4.1.9:

- Limited to maximum designed heat input rate.

X Permit Shield

For all applicable requirements listed above, provide monitoring/testing/recordkeeping/reporting which shall be used to demonstrate compliance. If the method is based on a permit or rule, include the condition number or citation. (Note: Each requirement listed above must have an associated method of demonstrating compliance. If there is not already a required method in place, then a method must be proposed.)

Monitoring:

- Hourly and annual fuel consumption rate.

Are you in compliance with all applicable requirements for this emission unit? X Yes ___No

If no, complete the **Schedule of Compliance Form** as **ATTACHMENT F**.

ATTACHMENT E - Emission Unit Form

Emission Unit Description

Emission unit ID number:	**Emission unit name:**	**List any control devices associated with this emission unit:**
UGS-B-4004	Utility Space Heater	NA

Provide a description of the emission unit (type, method of operation, design parameters, etc.):
Utility Space Heater

Manufacturer:	**Model number:**	**Serial number:**
Reznor	UEAS-260	NA
Construction date:	**Installation date:**	**Modification date(s):**
NA	2009	NA

Design Capacity (examples: furnaces - tons/hr, tanks - gallons):
0.26 mmBtu/hr

Maximum Hourly Throughput:	**Maximum Annual Throughput:**	**Maximum Operating Schedule:**
250 scf/hr	2.16 mmscf/yr	8,760 hr/yr

Fuel Usage Data **(fill out all applicable fields)**

Does this emission unit combust fuel? X Yes ___ No	**If yes, is it?** ___ Indirect Fired X Direct Fired
Maximum design heat input and/or maximum horsepower rating: 0.26 mmBtu/hr	**Type and Btu/hr rating of burners:** 0.26 mmBtu/hr

List the primary fuel type(s) and if applicable, the secondary fuel type(s). For each fuel type listed, provide the maximum hourly and annual fuel usage for each.
Natural Gas - 250 scf/hr, 2.16 mmscf/yr

Describe each fuel expected to be used during the term of the permit.

Fuel Type	Max. Sulfur Content	Max. Ash Content	BTU Value
Natural Gas	0.01 wt%	NA	960 Btu/sfc

Emissions Data		
Criteria Pollutants	Potential Emissions	
	PPH	TPY
Carbon Monoxide (CO)	0.01	0.05
Nitrogen Oxides (NO_X)	0.03	0.11
Lead (Pb)	NA	NA
Particulate Matter ($PM_{2.5}$)	NA	NA
Particulate Matter (PM_{10})	0.002	0.01
Total Particulate Matter (TSP)	0.002	0.01
Sulfur Dioxide (SO_2)	<0.001	0.001
Volatile Organic Compounds (VOC)	0.001	0.006
Hazardous Air Pollutants	Potential Emissions	
	PPH	TPY
NA	NA	NA
Regulated Pollutants other than Criteria and HAP	Potential Emissions	
	PPH	TPY
NA	NA	NA

List the method(s) used to calculate the potential emissions (include dates of any stack tests conducted, versions of software used, source and dates of emission factors, etc.).

Engineering Estimate

Applicable Requirements

List all applicable requirements for this emission unit. For each applicable requirement, include the underlying rule/regulation citation and/or construction permit with the condition number. (*Note: Title V permit condition numbers alone are not the underlying applicable requirements*). If an emission limit is calculated based on the type of source and design capacity or if a standard is based on a design parameter, this information should also be included.

R13-1650K §4.1.9:

- Limited to maximum designed heat input rate.

X Permit Shield

For all applicable requirements listed above, provide monitoring/testing/recordkeeping/reporting which shall be used to demonstrate compliance. If the method is based on a permit or rule, include the condition number or citation. (Note: Each requirement listed above must have an associated method of demonstrating compliance. If there is not already a required method in place, then a method must be proposed.)

Monitoring:

- Hourly and annual fuel consumption rate.

Are you in compliance with all applicable requirements for this emission unit? X Yes ___No

If no, complete the **Schedule of Compliance Form** as **ATTACHMENT F**.

ATTACHMENT E - Emission Unit Form

Emission Unit Description

Emission unit ID number:	**Emission unit name:**	**List any control devices associated with this emission unit:**
UUG-B-1004	Utility Space Heater	NA

Provide a description of the emission unit (type, method of operation, design parameters, etc.):
Utility Space Heater

Manufacturer:	**Model number:**	**Serial number:**
Reznor	UEAS-260	NA
Construction date:	**Installation date:**	**Modification date(s):**
NA	2009	NA

Design Capacity (examples: furnaces - tons/hr, tanks - gallons):
0.26 mmBtu/hr

Maximum Hourly Throughput:	**Maximum Annual Throughput:**	**Maximum Operating Schedule:**
250 scf/hr	2.16 mmscf/yr	8,760 hr/yr

Fuel Usage Data **(fill out all applicable fields)**

Does this emission unit combust fuel? X Yes ___ No	**If yes, is it?** ___ Indirect Fired X Direct Fired
Maximum design heat input and/or maximum horsepower rating: 0.26 mmBtu/hr	**Type and Btu/hr rating of burners:** 0.26 mmBtu/hr

List the primary fuel type(s) and if applicable, the secondary fuel type(s). For each fuel type listed, provide the maximum hourly and annual fuel usage for each.
Natural Gas - 250 scf/hr, 2.16 mmscf/yr

Describe each fuel expected to be used during the term of the permit.

Fuel Type	Max. Sulfur Content	Max. Ash Content	BTU Value
Natural Gas	0.01 wt%	NA	960 Btu/sfc

Emissions Data		
Criteria Pollutants	Potential Emissions	
	PPH	TPY
Carbon Monoxide (CO)	0.01	0.05
Nitrogen Oxides (NO_X)	0.03	0.11
Lead (Pb)	NA	NA
Particulate Matter ($PM_{2.5}$)	NA	NA
Particulate Matter (PM_{10})	0.002	0.01
Total Particulate Matter (TSP)	0.002	0.01
Sulfur Dioxide (SO_2)	<0.001	0.001
Volatile Organic Compounds (VOC)	0.001	0.006
Hazardous Air Pollutants	Potential Emissions	
	PPH	TPY
NA	NA	NA
Regulated Pollutants other than Criteria and HAP	Potential Emissions	
	PPH	TPY
NA	NA	NA

List the method(s) used to calculate the potential emissions (include dates of any stack tests conducted, versions of software used, source and dates of emission factors, etc.).

Engineering Estimate

Applicable Requirements

List all applicable requirements for this emission unit. For each applicable requirement, include the underlying rule/regulation citation and/or construction permit with the condition number. (*Note: Title V permit condition numbers alone are not the underlying applicable requirements*). If an emission limit is calculated based on the type of source and design capacity or if a standard is based on a design parameter, this information should also be included.

R13-1650K §4.1.9:

- Limited to maximum designed heat input rate.

X Permit Shield

For all applicable requirements listed above, provide monitoring/testing/recordkeeping/reporting which shall be used to demonstrate compliance. If the method is based on a permit or rule, include the condition number or citation. (Note: Each requirement listed above must have an associated method of demonstrating compliance. If there is not already a required method in place, then a method must be proposed.)

Monitoring:

- Hourly and annual fuel consumption rate.

Are you in compliance with all applicable requirements for this emission unit? X Yes ___No

If no, complete the **Schedule of Compliance Form** as **ATTACHMENT F**.

ATTACHMENT E - Emission Unit Form

Emission Unit Description

Emission unit ID number:	**Emission unit name:**	**List any control devices associated with this emission unit:**
UUG-B-1005	Utility Space Heater	NA

Provide a description of the emission unit (type, method of operation, design parameters, etc.):
Utility Space Heater

Manufacturer:	**Model number:**	**Serial number:**
Reznor	UEAS-260	NA
Construction date:	**Installation date:**	**Modification date(s):**
NA	2009	NA

Design Capacity (examples: furnaces - tons/hr, tanks - gallons):
0.26 mmBtu/hr

Maximum Hourly Throughput:	**Maximum Annual Throughput:**	**Maximum Operating Schedule:**
250 scf/hr	2.16 mmscf/yr	8,760 hr/yr

Fuel Usage Data **(fill out all applicable fields)**

Does this emission unit combust fuel? X Yes ___ No	**If yes, is it?** ___ Indirect Fired X Direct Fired
Maximum design heat input and/or maximum horsepower rating: 0.26 mmBtu/hr	**Type and Btu/hr rating of burners:** 0.26 mmBtu/hr

List the primary fuel type(s) and if applicable, the secondary fuel type(s). For each fuel type listed, provide the maximum hourly and annual fuel usage for each.
Natural Gas - 250 scf/hr, 2.16 mmscf/yr

Describe each fuel expected to be used during the term of the permit.

Fuel Type	Max. Sulfur Content	Max. Ash Content	BTU Value
Natural Gas	0.01 wt%	NA	960 Btu/sfc

Emissions Data		
Criteria Pollutants	Potential Emissions	
	PPH	TPY
Carbon Monoxide (CO)	0.01	0.05
Nitrogen Oxides (NO_X)	0.03	0.11
Lead (Pb)	NA	NA
Particulate Matter ($PM_{2.5}$)	NA	NA
Particulate Matter (PM_{10})	0.002	0.01
Total Particulate Matter (TSP)	0.002	0.01
Sulfur Dioxide (SO_2)	<0.001	0.001
Volatile Organic Compounds (VOC)	0.001	0.006
Hazardous Air Pollutants	Potential Emissions	
	PPH	TPY
NA	NA	NA
Regulated Pollutants other than Criteria and HAP	Potential Emissions	
	PPH	TPY
NA	NA	NA

List the method(s) used to calculate the potential emissions (include dates of any stack tests conducted, versions of software used, source and dates of emission factors, etc.).

Engineering Estimate

Applicable Requirements

List all applicable requirements for this emission unit. For each applicable requirement, include the underlying rule/regulation citation and/or construction permit with the condition number. (*Note: Title V permit condition numbers alone are not the underlying applicable requirements*). If an emission limit is calculated based on the type of source and design capacity or if a standard is based on a design parameter, this information should also be included.

R13-1650K §4.1.9:

- Limited to maximum designed heat input rate.

X Permit Shield

For all applicable requirements listed above, provide monitoring/testing/recordkeeping/reporting which shall be used to demonstrate compliance. If the method is based on a permit or rule, include the condition number or citation. (Note: Each requirement listed above must have an associated method of demonstrating compliance. If there is not already a required method in place, then a method must be proposed.)

Monitoring:

- Hourly and annual fuel consumption rate.

Are you in compliance with all applicable requirements for this emission unit? X Yes ___No

If no, complete the **Schedule of Compliance Form** as **ATTACHMENT F**.

ATTACHMENT E - Emission Unit Form

Emission Unit Description

Emission unit ID number:	**Emission unit name:**	**List any control devices associated with this emission unit:**
UUG-B-1006	Utility Space Heater	NA

Provide a description of the emission unit (type, method of operation, design parameters, etc.):
Utility Space Heater

Manufacturer:	**Model number:**	**Serial number:**
Reznor	UEAS-260	NA
Construction date:	**Installation date:**	**Modification date(s):**
NA	2009	NA

Design Capacity (examples: furnaces - tons/hr, tanks - gallons):
0.26 mmBtu/hr

Maximum Hourly Throughput:	**Maximum Annual Throughput:**	**Maximum Operating Schedule:**
250 scf/hr	2.16 mmscf/yr	8,760 hr/yr

Fuel Usage Data **(fill out all applicable fields)**

Does this emission unit combust fuel? X Yes ___ No	**If yes, is it?** ___ Indirect Fired X Direct Fired
Maximum design heat input and/or maximum horsepower rating: 0.26 mmBtu/hr	**Type and Btu/hr rating of burners:** 0.26 mmBtu/hr

List the primary fuel type(s) and if applicable, the secondary fuel type(s). For each fuel type listed, provide the maximum hourly and annual fuel usage for each.
Natural Gas - 250 scf/hr, 2.16 mmscf/yr

Describe each fuel expected to be used during the term of the permit.

Fuel Type	Max. Sulfur Content	Max. Ash Content	BTU Value
Natural Gas	0.01 wt%	NA	960 Btu/sfc

Emissions Data		
Criteria Pollutants	Potential Emissions	
	PPH	TPY
Carbon Monoxide (CO)	0.01	0.05
Nitrogen Oxides (NO_X)	0.03	0.11
Lead (Pb)	NA	NA
Particulate Matter ($PM_{2.5}$)	NA	NA
Particulate Matter (PM_{10})	0.002	0.01
Total Particulate Matter (TSP)	0.002	0.01
Sulfur Dioxide (SO_2)	<0.001	0.001
Volatile Organic Compounds (VOC)	0.001	0.006
Hazardous Air Pollutants	Potential Emissions	
	PPH	TPY
NA	NA	NA
Regulated Pollutants other than Criteria and HAP	Potential Emissions	
	PPH	TPY
NA	NA	NA

List the method(s) used to calculate the potential emissions (include dates of any stack tests conducted, versions of software used, source and dates of emission factors, etc.).

Engineering Estimate

Applicable Requirements

List all applicable requirements for this emission unit. For each applicable requirement, include the underlying rule/regulation citation and/or construction permit with the condition number. (*Note: Title V permit condition numbers alone are not the underlying applicable requirements*). If an emission limit is calculated based on the type of source and design capacity or if a standard is based on a design parameter, this information should also be included.

R13-1650K §4.1.9:

- Limited to maximum designed heat input rate.

X Permit Shield

For all applicable requirements listed above, provide monitoring/testing/recordkeeping/reporting which shall be used to demonstrate compliance. If the method is based on a permit or rule, include the condition number or citation. (Note: Each requirement listed above must have an associated method of demonstrating compliance. If there is not already a required method in place, then a method must be proposed.)

Monitoring:

- Hourly and annual fuel consumption rate.

Are you in compliance with all applicable requirements for this emission unit? X Yes ___No

If no, complete the **Schedule of Compliance Form** as **ATTACHMENT F**.

ATTACHMENT E - Emission Unit Form

Emission Unit Description

Emission unit ID number:	**Emission unit name:**	**List any control devices associated with this emission unit:**
UUG-B-1007	Utility Space Heater	NA

Provide a description of the emission unit (type, method of operation, design parameters, etc.):
Utility Space Heater

Manufacturer:	**Model number:**	**Serial number:**
Reznor	UEAS-260	NA
Construction date:	**Installation date:**	**Modification date(s):**
NA	2009	NA

Design Capacity (examples: furnaces - tons/hr, tanks - gallons):
0.26 mmBtu/hr

Maximum Hourly Throughput:	**Maximum Annual Throughput:**	**Maximum Operating Schedule:**
250 scf/hr	2.16 mmscf/yr	8,760 hr/yr

Fuel Usage Data **(fill out all applicable fields)**

Does this emission unit combust fuel? X Yes ___ No	**If yes, is it?** ___ Indirect Fired X Direct Fired
Maximum design heat input and/or maximum horsepower rating: 0.26 mmBtu/hr	**Type and Btu/hr rating of burners:** 0.26 mmBtu/hr

List the primary fuel type(s) and if applicable, the secondary fuel type(s). For each fuel type listed, provide the maximum hourly and annual fuel usage for each.
Natural Gas - 250 scf/hr, 2.16 mmscf/yr

Describe each fuel expected to be used during the term of the permit.

Fuel Type	Max. Sulfur Content	Max. Ash Content	BTU Value
Natural Gas	0.01 wt%	NA	960 Btu/sfc

Emissions Data		
Criteria Pollutants	Potential Emissions	
	PPH	TPY
Carbon Monoxide (CO)	0.01	0.05
Nitrogen Oxides (NO_X)	0.03	0.11
Lead (Pb)	NA	NA
Particulate Matter ($PM_{2.5}$)	NA	NA
Particulate Matter (PM_{10})	0.002	0.01
Total Particulate Matter (TSP)	0.002	0.01
Sulfur Dioxide (SO_2)	<0.001	0.001
Volatile Organic Compounds (VOC)	0.001	0.006
Hazardous Air Pollutants	Potential Emissions	
	PPH	TPY
NA	NA	NA
Regulated Pollutants other than Criteria and HAP	Potential Emissions	
	PPH	TPY
NA	NA	NA

List the method(s) used to calculate the potential emissions (include dates of any stack tests conducted, versions of software used, source and dates of emission factors, etc.).

Engineering Estimate

Applicable Requirements

List all applicable requirements for this emission unit. For each applicable requirement, include the underlying rule/regulation citation and/or construction permit with the condition number. (*Note: Title V permit condition numbers alone are not the underlying applicable requirements*). If an emission limit is calculated based on the type of source and design capacity or if a standard is based on a design parameter, this information should also be included.

R13-1650K §4.1.9:

- Limited to maximum designed heat input rate.

X Permit Shield

For all applicable requirements listed above, provide monitoring/testing/recordkeeping/reporting which shall be used to demonstrate compliance. If the method is based on a permit or rule, include the condition number or citation. (Note: Each requirement listed above must have an associated method of demonstrating compliance. If there is not already a required method in place, then a method must be proposed.)

Monitoring:

- Hourly and annual fuel consumption rate.

Are you in compliance with all applicable requirements for this emission unit? X Yes ___No

If no, complete the **Schedule of Compliance Form** as **ATTACHMENT F**.

Generators

ATTACHMENT E - Emission Unit Form

Emission Unit Description

Emission unit ID number:	**Emission unit name:**	**List any control devices associated with this emission unit:**
P-66	Diesel Generator	NA

Provide a description of the emission unit (type, method of operation, design parameters, etc.):
Diesel Generator

Manufacturer:	**Model number:**	**Serial number:**
NA	NA	NA
Construction date:	**Installation date:**	**Modification date(s):**
NA	NA	NA

Design Capacity (examples: furnaces - tons/hr, tanks - gallons):
235 hp

Maximum Hourly Throughput:	**Maximum Annual Throughput:**	**Maximum Operating Schedule:**
NA	NA	500 hr/yr

Fuel Usage Data **(fill out all applicable fields)**

Does this emission unit combust fuel? X Yes ___ No	**If yes, is it?** ___ Indirect Fired X Direct Fired
Maximum design heat input and/or maximum horsepower rating: 235 hp	**Type and Btu/hr rating of burners:** NA

List the primary fuel type(s) and if applicable, the secondary fuel type(s). For each fuel type listed, provide the maximum hourly and annual fuel usage for each.
Diesel

Describe each fuel expected to be used during the term of the permit.

Fuel Type	Max. Sulfur Content	Max. Ash Content	BTU Value
Diesel	NA	NA	129,000 Btu/gal

Emissions Data		
Criteria Pollutants	Potential Emissions	
	PPH	TPY
Carbon Monoxide (CO)	1.57	0.39
Nitrogen Oxides (NO_X)	7.3	1.82
Lead (Pb)	NA	NA
Particulate Matter ($PM_{2.5}$)	NA	NA
Particulate Matter (PM_{10})	0.52	0.13
Total Particulate Matter (TSP)	0.52	0.13
Sulfur Dioxide (SO_2)	0.48	0.12
Volatile Organic Compounds (VOC)	0.59	0.15
Hazardous Air Pollutants	Potential Emissions	
	PPH	TPY
NA	NA	NA
Regulated Pollutants other than Criteria and HAP	Potential Emissions	
	PPH	TPY
NA	NA	NA

List the method(s) used to calculate the potential emissions (include dates of any stack tests conducted, versions of software used, source and dates of emission factors, etc.).

Engineering Estimate

Applicable Requirements
List all applicable requirements for this emission unit. For each applicable requirement, include the underlying rule/regulation citation and/or <u>construction permit</u> with the condition number. (*Note: Title V permit condition numbers alone are not the underlying applicable requirements*). If an emission limit is calculated based on the type of source and design capacity or if a standard is based on a design parameter, this information should also be included. **40CFR63, Subpart ZZZZ**
<u>X</u> Permit Shield
For all applicable requirements listed above, provide monitoring/testing/recordkeeping/reporting which shall be used to demonstrate compliance. If the method is based on a permit or rule, include the condition number or citation. (Note: Each requirement listed above must have an associated method of demonstrating compliance. If there is not already a required method in place, then a method must be proposed.) NA
Are you in compliance with all applicable requirements for this emission unit? <u>X</u> Yes ___No If no, complete the **Schedule of Compliance Form** as **ATTACHMENT F**.

ATTACHMENT E - Emission Unit Form

Emission Unit Description

Emission unit ID number:	**Emission unit name:**	**List any control devices associated with this emission unit:**
U3F-G-171	Diesel Generator	NA

Provide a description of the emission unit (type, method of operation, design parameters, etc.):
Diesel Generator

Manufacturer:	**Model number:**	**Serial number:**
NA	NA	NA
Construction date:	**Installation date:**	**Modification date(s):**
NA	NA	NA

Design Capacity (examples: furnaces - tons/hr, tanks - gallons):
235 hp

Maximum Hourly Throughput:	**Maximum Annual Throughput:**	**Maximum Operating Schedule:**
NA	NA	500 hr/yr

Fuel Usage Data **(fill out all applicable fields)**

Does this emission unit combust fuel? X Yes ___ No	**If yes, is it?** ___ Indirect Fired X Direct Fired
Maximum design heat input and/or maximum horsepower rating: 235 hp	**Type and Btu/hr rating of burners:** NA

List the primary fuel type(s) and if applicable, the secondary fuel type(s). For each fuel type listed, provide the maximum hourly and annual fuel usage for each.
Diesel

Describe each fuel expected to be used during the term of the permit.

Fuel Type	Max. Sulfur Content	Max. Ash Content	BTU Value
Diesel	NA	NA	129,000 Btu/gal

Emissions Data		
Criteria Pollutants	Potential Emissions	
	PPH	TPY
Carbon Monoxide (CO)	1.57	0.39
Nitrogen Oxides (NO_X)	7.3	1.82
Lead (Pb)	NA	NA
Particulate Matter ($PM_{2.5}$)	NA	NA
Particulate Matter (PM_{10})	0.52	0.13
Total Particulate Matter (TSP)	0.52	0.13
Sulfur Dioxide (SO_2)	0.48	0.12
Volatile Organic Compounds (VOC)	0.59	0.15
Hazardous Air Pollutants	Potential Emissions	
	PPH	TPY
NA	NA	NA
Regulated Pollutants other than Criteria and HAP	Potential Emissions	
	PPH	TPY
NA	NA	NA

List the method(s) used to calculate the potential emissions (include dates of any stack tests conducted, versions of software used, source and dates of emission factors, etc.).

Engineering Estimate

Applicable Requirements
List all applicable requirements for this emission unit. For each applicable requirement, include the underlying rule/regulation citation and/or <u>construction permit</u> with the condition number. (*Note: Title V permit condition numbers alone are not the underlying applicable requirements*). If an emission limit is calculated based on the type of source and design capacity or if a standard is based on a design parameter, this information should also be included. **40CFR63, Subpart ZZZZ**
<u>X</u> Permit Shield
For all applicable requirements listed above, provide monitoring/testing/recordkeeping/reporting which shall be used to demonstrate compliance. If the method is based on a permit or rule, include the condition number or citation. (Note: Each requirement listed above must have an associated method of demonstrating compliance. If there is not already a required method in place, then a method must be proposed.) NA
Are you in compliance with all applicable requirements for this emission unit? <u>X</u> Yes ___No If no, complete the **Schedule of Compliance Form** as **ATTACHMENT F**.

Attachment F

Schedule of Compliance

ATTACHMENT F - Schedule of Compliance Form	
Complete this section if you indicated noncompliance with any of the applicable requirements identified in the permit application. For each emission unit which is not in compliance, identify the applicable requirement, the reason(s) for noncompliance, a description of how the source will achieve compliance, and a detailed schedule of compliance. If there is a consent order that applies to this requirement, attach a copy to this form.	
1. Applicable Requirement - Since M&G believes it is in compliance applicable requirements associated with this permit application, Attachment F is not applicable.	
Unit(s): N/A	**Applicable Requirement:** N/A
2. Reason for Noncompliance: N/A	
3. How will Compliance be Achieved? N/A	
4. Consent Order Number (if applicable): N/A	
5. Schedule of Compliance. Provide a schedule of remedial measures, including an enforceable sequence of actions with milestones, leading to compliance, including a date for final compliance.	
Remedial Measure or Action	Date to be Achieved
N/A	N/A
6. Submittal of Progress Reports. N/A	
Content of Progress Report: N/A	**Report starting date:** N/A **Submittal frequency:** N/A

Attachment G

Air Pollution Control Device Forms

CP-3

ATTACHMENT G - Air Pollution Control Device Form

Control device ID number: C3T-B-1600	**List all emission units associated with this control device.** Heater Header System	
Manufacturer: Born, Inc.	**Model number:** H-149-85	**Installation date:** 1993

Type of Air Pollution Control Device:

___ Baghouse/Fabric Filter ___ Venturi Scrubber ___ Multiclone

___ Carbon Bed Adsorber ___ Packed Tower Scrubber ___ Single Cyclone

___ Carbon Drum(s) ___ Other Wet Scrubber ___ Cyclone Bank

___ Catalytic Incinerator ___ Condenser ___ Settling Chamber

___ Thermal Incinerator ___ Flare _X_ Other (describe) Process Heater

___ Wet Plate Electrostatic Precipitator ___ Dry Plate Electrostatic Precipitator

List the pollutants for which this device is intended to control and the capture and control efficiencies.

Pollutant	Capture Efficiency	Control Efficiency
VOC	99.9%	99.8%

Explain the characteristic design parameters of this control device (flow rates, pressure drops, number of bags, size, temperatures, etc.).
Process Heater

Is this device subject to the CAM requirements of 40 C.F.R. 64? ___ Yes _X_ No

If Yes, **Complete ATTACHMENT H**

If No**, Provide justification.** Existing Title V monitoring in place and subject to NESHAP standard.

Describe the parameters monitored and/or methods used to indicate performance of this control device.

Transition temperature is continuously recorded.

ATTACHMENT G - Air Pollution Control Device Form

Control device ID number: C3L-F-7020	**List all emission units associated with this control device.** C3L-F-8010, C3L-F-9010, C3L-F-6010, C3L-F-7010, & C3L-F-6510	
Manufacturer: NA	**Model number:** NA	**Installation date:** 1994

Type of Air Pollution Control Device:

___ Baghouse/Fabric Filter ___ Venturi Scrubber ___ Multiclone

___ Carbon Bed Adsorber ___ Packed Tower Scrubber ___ Single Cyclone

___ Carbon Drum(s) ___ Other Wet Scrubber ___ Cyclone Bank

___ Catalytic Incinerator ___ Condenser ___ Settling Chamber

___ Thermal Incinerator ___ Flare _X_ Other (describe) Seal Pot

___ Wet Plate Electrostatic Precipitator ___ Dry Plate Electrostatic Precipitator

List the pollutants for which this device is intended to control and the capture and control efficiencies.

Pollutant	Capture Efficiency	Control Efficiency
Ethylene Glycol	99.9%	90.0%

Explain the characteristic design parameters of this control device (flow rates, pressure drops, number of bags, size, temperatures, etc.).
Seal Pot is liquid filled and knocks out condensable liquids.

Is this device subject to the CAM requirements of 40 C.F.R. 64? ___ Yes _X_ No

If Yes, **Complete ATTACHMENT H**

If No**, Provide justification.** PTE to device is less than 100 tpy.

Describe the parameters monitored and/or methods used to indicate performance of this control device.

NA

ATTACHMENT G - Air Pollution Control Device Form

Control device ID number: L4A-M-0200	**List all emission units associated with this control device.** L4A-F-0200	
Manufacturer: Mikropul	**Model number:** 2558-B-30	**Installation date:** 1992

Type of Air Pollution Control Device:

_X_ Baghouse/Fabric Filter ___ Venturi Scrubber ___ Multiclone

___ Carbon Bed Adsorber ___ Packed Tower Scrubber ___ Single Cyclone

___ Carbon Drum(s) ___ Other Wet Scrubber ___ Cyclone Bank

___ Catalytic Incinerator ___ Condenser ___ Settling Chamber

___ Thermal Incinerator ___ Flare ___ Other (describe) _____

___ Wet Plate Electrostatic Precipitator ___ Dry Plate Electrostatic Precipitator

List the pollutants for which this device is intended to control and the capture and control efficiencies.

Pollutant	Capture Efficiency	Control Efficiency
PM	99.9%	99.0%

Explain the characteristic design parameters of this control device (flow rates, pressure drops, number of bags, size, temperatures, etc.).
Baghouse uses polyester or equivalent cloth materials.

Is this device subject to the CAM requirements of 40 C.F.R. 64? ___ Yes _X_ No

If Yes, **Complete ATTACHMENT H**

If No**, Provide justification.** Existing Title V monitoring in place and PTE to device is less than 100 tpy.

Describe the parameters monitored and/or methods used to indicate performance of this control device.

Local pressure readouts are used to determine pressure drop.

ATTACHMENT G - Air Pollution Control Device Form

Control device ID number: C4S-M-3130	**List all emission units associated with this control device.** C4S-F-3010	
Manufacturer: Mikropul	**Model number:** 19-8-2 PSIG"C"	**Installation date:** 1992

Type of Air Pollution Control Device:

_X_ Baghouse/Fabric Filter	___ Venturi Scrubber	___ Multiclone
___ Carbon Bed Adsorber	___ Packed Tower Scrubber	___ Single Cyclone
___ Carbon Drum(s)	___ Other Wet Scrubber	___ Cyclone Bank
___ Catalytic Incinerator	___ Condenser	___ Settling Chamber
___ Thermal Incinerator	___ Flare	___ Other (describe) _____
___ Wet Plate Electrostatic Precipitator		___ Dry Plate Electrostatic Precipitator

List the pollutants for which this device is intended to control and the capture and control efficiencies.

Pollutant	Capture Efficiency	Control Efficiency
PM	99.9%	99.0%

Explain the characteristic design parameters of this control device (flow rates, pressure drops, number of bags, size, temperatures, etc.).
Baghouse uses polyester or equivalent cloth materials.

Is this device subject to the CAM requirements of 40 C.F.R. 64? ___ Yes _X_ No

If Yes, **Complete ATTACHMENT H**

If No**, Provide justification.** Existing Title V monitoring in place and PTE to device is less than 100 tpy.

Describe the parameters monitored and/or methods used to indicate performance of this control device.

Local pressure readouts are used to determine pressure drop.

M&G Polymers
Emissions from Hot Oil Heater C3T-B-1600
(tpy)

CO	NOx	PM	SO2	VOC	EG	AA	1,4-Dioxane
8.14	14	0.47	0.23	1.97	0.02	0.75	0.001

M&G Polymers
Emissions from Seal Pot C3L-F-7020
(tpy)

VOC	EG
0.49	0.49

CP-4

ATTACHMENT G - Air Pollution Control Device Form

Control device ID number: C4S-M-1040	**List all emission units associated with this control device.** C4S-F-1020	
Manufacturer: Mikropul	**Model number:** 19-8-20	**Installation date:** 1996

Type of Air Pollution Control Device:

_X_ Baghouse/Fabric Filter ___ Venturi Scrubber ___ Multiclone

___ Carbon Bed Adsorber ___ Packed Tower Scrubber ___ Single Cyclone

___ Carbon Drum(s) ___ Other Wet Scrubber ___ Cyclone Bank

___ Catalytic Incinerator ___ Condenser ___ Settling Chamber

___ Thermal Incinerator ___ Flare ___ Other (describe) _____

___ Wet Plate Electrostatic Precipitator ___ Dry Plate Electrostatic Precipitator

List the pollutants for which this device is intended to control and the capture and control efficiencies.

Pollutant	Capture Efficiency	Control Efficiency
PM	99.9%	99.0%

Explain the characteristic design parameters of this control device (flow rates, pressure drops, number of bags, size, temperatures, etc.).
Baghouse uses polyester or equivalent cloth materials.

Is this device subject to the CAM requirements of 40 C.F.R. 64? ___ Yes _X_ No

If Yes, **Complete ATTACHMENT H**

If No**, Provide justification.** Existing Title V monitoring in place and PTE to device is less than 100 tpy.

Describe the parameters monitored and/or methods used to indicate performance of this control device.

Local pressure readouts are used to determine pressure drop.

ATTACHMENT G - Air Pollution Control Device Form

Control device ID number: C4A-M-0340	**List all emission units associated with this control device.** C4A-F-0410	
Manufacturer: Flex-Kleen	**Model number:** 96BXTC36M34 ARR IIG	**Installation date:** 1993

Type of Air Pollution Control Device:

_X_ Baghouse/Fabric Filter	___ Venturi Scrubber	___ Multiclone
___ Carbon Bed Adsorber	___ Packed Tower Scrubber	___ Single Cyclone
___ Carbon Drum(s)	___ Other Wet Scrubber	___ Cyclone Bank
___ Catalytic Incinerator	___ Condenser	___ Settling Chamber
___ Thermal Incinerator	___ Flare	___ Other (describe) _____
___ Wet Plate Electrostatic Precipitator		___ Dry Plate Electrostatic Precipitator

List the pollutants for which this device is intended to control and the capture and control efficiencies.

Pollutant	Capture Efficiency	Control Efficiency
PM	99.9%	99.0%

Explain the characteristic design parameters of this control device (flow rates, pressure drops, number of bags, size, temperatures, etc.).
Baghouse uses polyester or equivalent cloth materials.

Is this device subject to the CAM requirements of 40 C.F.R. 64? ___ Yes _X_ No

If Yes, **Complete ATTACHMENT H**

If No**, Provide justification.** Existing Title V monitoring in place and PTE to device is less than 100 tpy.

Describe the parameters monitored and/or methods used to indicate performance of this control device.

Local pressure readouts are used to determine pressure drop.

ATTACHMENT G - Air Pollution Control Device Form

Control device ID number: C4Q-M-0001/ C4Q-F-0001	**List all emission units associated with this control device.** C4Q-F-5010	
Manufacturer: Flex-Kleen	**Model number:** 120BXTL9 ARR IIG	**Installation date:** NA

Type of Air Pollution Control Device:

_X_ Baghouse/Fabric Filter	___ Venturi Scrubber	___ Multiclone
___ Carbon Bed Adsorber	___ Packed Tower Scrubber	___ Single Cyclone
___ Carbon Drum(s)	___ Other Wet Scrubber	___ Cyclone Bank
___ Catalytic Incinerator	___ Condenser	___ Settling Chamber
___ Thermal Incinerator	___ Flare	___ Other (describe)
___ Wet Plate Electrostatic Precipitator		___ Dry Plate Electrostatic Precipitator

List the pollutants for which this device is intended to control and the capture and control efficiencies.

Pollutant	Capture Efficiency	Control Efficiency
PM	99.9%	99.9%

Explain the characteristic design parameters of this control device (flow rates, pressure drops, number of bags, size, temperatures, etc.).
Baghouse uses polyester or equivalent cloth materials.

Is this device subject to the CAM requirements of 40 C.F.R. 64? ___ Yes _X_ No

If Yes, **Complete ATTACHMENT H**

If No**, Provide justification.** Existing Title V monitoring in place and PTE to device is less than 100 tpy.

Describe the parameters monitored and/or methods used to indicate performance of this control device.

Local pressure readouts are used to determine pressure drop.

ATTACHMENT G - Air Pollution Control Device Form

Control device ID number: C4Q-M-2002	**List all emission units associated with this control device.** C4Q-F-5000	
Manufacturer: Flex-Kleen	**Model number:** NA	**Installation date:** NA

Type of Air Pollution Control Device:

_X_ Baghouse/Fabric Filter	___ Venturi Scrubber	___ Multiclone
___ Carbon Bed Adsorber	___ Packed Tower Scrubber	___ Single Cyclone
___ Carbon Drum(s)	___ Other Wet Scrubber	___ Cyclone Bank
___ Catalytic Incinerator	___ Condenser	___ Settling Chamber
___ Thermal Incinerator	___ Flare	___ Other (describe)
___ Wet Plate Electrostatic Precipitator		___ Dry Plate Electrostatic Precipitator

List the pollutants for which this device is intended to control and the capture and control efficiencies.

Pollutant	Capture Efficiency	Control Efficiency
PM	99.9%	99.5%

Explain the characteristic design parameters of this control device (flow rates, pressure drops, number of bags, size, temperatures, etc.).
Baghouse uses polyester or equivalent cloth materials.

Is this device subject to the CAM requirements of 40 C.F.R. 64? ___ Yes _X_ No

If Yes, **Complete ATTACHMENT H**

If No**, Provide justification.** Existing Title V monitoring in place and PTE to device is less than 100 tpy.

Describe the parameters monitored and/or methods used to indicate performance of this control device.

Local pressure readouts are used to determine pressure drop.

ATTACHMENT G - Air Pollution Control Device Form

Control device ID number: C4Q-M-4140/ C4Q-F-4220	**List all emission units associated with this control device.** C4Q-F-1290	
Manufacturer: NA	**Model number:** NA	**Installation date:** NA

Type of Air Pollution Control Device:

___ Baghouse/Fabric Filter ___ Venturi Scrubber ___ Multiclone

___ Carbon Bed Adsorber ___ Packed Tower Scrubber ___ Single Cyclone

___ Carbon Drum(s) ___ Other Wet Scrubber ___ Cyclone Bank

___ Catalytic Incinerator ___ Condenser ___ Settling Chamber

___ Thermal Incinerator ___ Flare _X_ Other (describe) HEPA Filter

___ Wet Plate Electrostatic Precipitator ___ Dry Plate Electrostatic Precipitator

List the pollutants for which this device is intended to control and the capture and control efficiencies.

Pollutant	Capture Efficiency	Control Efficiency
PM	99.9%	99.9%

Explain the characteristic design parameters of this control device (flow rates, pressure drops, number of bags, size, temperatures, etc.).
Cartridge and HEPA filter.

Is this device subject to the CAM requirements of 40 C.F.R. 64? ___ Yes _X_ No

If Yes, **Complete ATTACHMENT H**

If No**, Provide justification.** Existing Title V monitoring in place and PTE to device is less than 100 tpy.

Describe the parameters monitored and/or methods used to indicate performance of this control device.

NA

ATTACHMENT G - Air Pollution Control Device Form

Control device ID number: C4Q-M-4160	**List all emission units associated with this control device.** C4Q-F-3290	
Manufacturer: NA	**Model number:** NA	**Installation date:** NA

Type of Air Pollution Control Device:

___ Baghouse/Fabric Filter ___ Venturi Scrubber ___ Multiclone

___ Carbon Bed Adsorber ___ Packed Tower Scrubber ___ Single Cyclone

___ Carbon Drum(s) ___ Other Wet Scrubber ___ Cyclone Bank

___ Catalytic Incinerator ___ Condenser ___ Settling Chamber

___ Thermal Incinerator ___ Flare _X_ Other (describe) HEPA Filter

___ Wet Plate Electrostatic Precipitator ___ Dry Plate Electrostatic Precipitator

List the pollutants for which this device is intended to control and the capture and control efficiencies.

Pollutant	Capture Efficiency	Control Efficiency
PM	99.9%	99.9%

Explain the characteristic design parameters of this control device (flow rates, pressure drops, number of bags, size, temperatures, etc.).
HEPA filter.

Is this device subject to the CAM requirements of 40 C.F.R. 64? ___ Yes _X_ No

If Yes, **Complete ATTACHMENT H**

If No**, Provide justification.** Existing Title V monitoring in place and PTE to device is less than 100 tpy.

Describe the parameters monitored and/or methods used to indicate performance of this control device.

NA

ATTACHMENT G - Air Pollution Control Device Form

Control device ID number: C4Q-M-4190	**List all emission units associated with this control device.** C4Q-F-2290	
Manufacturer: NA	**Model number:** NA	**Installation date:** NA

Type of Air Pollution Control Device:

___ Baghouse/Fabric Filter ___ Venturi Scrubber ___ Multiclone

___ Carbon Bed Adsorber ___ Packed Tower Scrubber ___ Single Cyclone

___ Carbon Drum(s) ___ Other Wet Scrubber ___ Cyclone Bank

___ Catalytic Incinerator ___ Condenser ___ Settling Chamber

___ Thermal Incinerator ___ Flare _X_ Other (describe) HEPA Filter

___ Wet Plate Electrostatic Precipitator ___ Dry Plate Electrostatic Precipitator

List the pollutants for which this device is intended to control and the capture and control efficiencies.

Pollutant	Capture Efficiency	Control Efficiency
PM	99.9%	99.9%

Explain the characteristic design parameters of this control device (flow rates, pressure drops, number of bags, size, temperatures, etc.).
HEPA filter.

Is this device subject to the CAM requirements of 40 C.F.R. 64? ___ Yes _X_ No

If Yes, **Complete ATTACHMENT H**

If No**, Provide justification.** Existing Title V monitoring in place and PTE to device is less than 100 tpy.

Describe the parameters monitored and/or methods used to indicate performance of this control device.

NA

ATTACHMENT G - Air Pollution Control Device Form

Control device ID number: C4T-B-1600	**List all emission units associated with this control device.** Heater Header System	
Manufacturer: Born, Inc.	**Model number:** H-149-85	**Installation date:** 1988

Type of Air Pollution Control Device:

___ Baghouse/Fabric Filter ___ Venturi Scrubber ___ Multiclone

___ Carbon Bed Adsorber ___ Packed Tower Scrubber ___ Single Cyclone

___ Carbon Drum(s) ___ Other Wet Scrubber ___ Cyclone Bank

___ Catalytic Incinerator ___ Condenser ___ Settling Chamber

___ Thermal Incinerator ___ Flare _X_ Other (describe) Process Heater

___ Wet Plate Electrostatic Precipitator ___ Dry Plate Electrostatic Precipitator

List the pollutants for which this device is intended to control and the capture and control efficiencies.

Pollutant	Capture Efficiency	Control Efficiency
VOC	99.9%	99.8%

Explain the characteristic design parameters of this control device (flow rates, pressure drops, number of bags, size, temperatures, etc.).
Process Heater

Is this device subject to the CAM requirements of 40 C.F.R. 64? ___ Yes _X_ No

If Yes, **Complete ATTACHMENT H**

If No**, Provide justification.** Existing Title V monitoring in place and subject to NESHAP standard.

Describe the parameters monitored and/or methods used to indicate performance of this control device.

Transition temperature is continuously recorded.

ATTACHMENT G - Air Pollution Control Device Form

Control device ID number: C4S-M-2100	**List all emission units associated with this control device.** C4S-F-2050	
Manufacturer: Flex-Kleen	**Model number:** 96CVBC8M9 ARRIIG	**Installation date:** 1993

Type of Air Pollution Control Device:

_X_ Baghouse/Fabric Filter	___ Venturi Scrubber	___ Multiclone
___ Carbon Bed Adsorber	___ Packed Tower Scrubber	___ Single Cyclone
___ Carbon Drum(s)	___ Other Wet Scrubber	___ Cyclone Bank
___ Catalytic Incinerator	___ Condenser	___ Settling Chamber
___ Thermal Incinerator	___ Flare	___ Other (describe) _____
___ Wet Plate Electrostatic Precipitator		___ Dry Plate Electrostatic Precipitator

List the pollutants for which this device is intended to control and the capture and control efficiencies.

Pollutant	Capture Efficiency	Control Efficiency
PM	99.9%	99.0%

Explain the characteristic design parameters of this control device (flow rates, pressure drops, number of bags, size, temperatures, etc.).
Baghouse uses polyester or equivalent cloth materials.

Is this device subject to the CAM requirements of 40 C.F.R. 64? ___ Yes _X_ No

If Yes, **Complete ATTACHMENT H**

If No**, Provide justification.** Existing Title V monitoring in place and PTE to device is less than 100 tpy.

Describe the parameters monitored and/or methods used to indicate performance of this control device.

Local pressure readouts are used to determine pressure drop.

ATTACHMENT G - Air Pollution Control Device Form

Control device ID number: L4B-M-0200	**List all emission units associated with this control device.** L4B-F-0200	
Manufacturer: Flex-Kleen	**Model number:** 120BXTL9 ARR IIG	**Installation date:** 1993

Type of Air Pollution Control Device:

_X_ Baghouse/Fabric Filter	___ Venturi Scrubber	___ Multiclone
___ Carbon Bed Adsorber	___ Packed Tower Scrubber	___ Single Cyclone
___ Carbon Drum(s)	___ Other Wet Scrubber	___ Cyclone Bank
___ Catalytic Incinerator	___ Condenser	___ Settling Chamber
___ Thermal Incinerator	___ Flare	___ Other (describe) _____
___ Wet Plate Electrostatic Precipitator		___ Dry Plate Electrostatic Precipitator

List the pollutants for which this device is intended to control and the capture and control efficiencies.

Pollutant	Capture Efficiency	Control Efficiency
PM	99.9%	99.0%

Explain the characteristic design parameters of this control device (flow rates, pressure drops, number of bags, size, temperatures, etc.).
Baghouse uses polyester or equivalent cloth materials.

Is this device subject to the CAM requirements of 40 C.F.R. 64? ___ Yes _X_ No

If Yes, **Complete ATTACHMENT H**

If No**, Provide justification.** Existing Title V monitoring in place and PTE to device is less than 100 tpy.

Describe the parameters monitored and/or methods used to indicate performance of this control device.

Local pressure readouts are used to determine pressure drop.

ATTACHMENT G - Air Pollution Control Device Form

Control device ID number: C4S-M-3140	**List all emission units associated with this control device.** C4S-F-3080	
Manufacturer: Mikropul	**Model number:** 2558-B-30	**Installation date:** 1992

Type of Air Pollution Control Device:

_X_ Baghouse/Fabric Filter ___ Venturi Scrubber ___ Multiclone

___ Carbon Bed Adsorber ___ Packed Tower Scrubber ___ Single Cyclone

___ Carbon Drum(s) ___ Other Wet Scrubber ___ Cyclone Bank

___ Catalytic Incinerator ___ Condenser ___ Settling Chamber

___ Thermal Incinerator ___ Flare ___ Other (describe) _____

___ Wet Plate Electrostatic Precipitator ___ Dry Plate Electrostatic Precipitator

List the pollutants for which this device is intended to control and the capture and control efficiencies.

Pollutant	Capture Efficiency	Control Efficiency
PM	99.9%	99.0%

Explain the characteristic design parameters of this control device (flow rates, pressure drops, number of bags, size, temperatures, etc.).
Baghouse uses polyester or equivalent cloth materials.

Is this device subject to the CAM requirements of 40 C.F.R. 64? ___ Yes _X_ No

If Yes, **Complete ATTACHMENT H**

If No**, Provide justification.** Existing Title V monitoring in place and PTE to device is less than 100 tpy.

Describe the parameters monitored and/or methods used to indicate performance of this control device.

Local pressure readouts are used to determine pressure drop.

M&G Polymers
Emissions from Hot Oil Heater C4T-B-1600
(tpy)

CO	NOx	PM	SO2	VOC	EG	AA
8.14	14	0.47	0.23	1.44	0.02	0.19

CSS-7

ATTACHMENT G - Air Pollution Control Device Form

Control device ID number: C2T-B-9001	**List all emission units associated with this control device.** Heater Header System	
Manufacturer: Born, Inc.	**Model number:** H-149-85	**Installation date:** 1988

Type of Air Pollution Control Device:

___ Baghouse/Fabric Filter ___ Venturi Scrubber ___ Multiclone

___ Carbon Bed Adsorber ___ Packed Tower Scrubber ___ Single Cyclone

___ Carbon Drum(s) ___ Other Wet Scrubber ___ Cyclone Bank

___ Catalytic Incinerator ___ Condenser ___ Settling Chamber

___ Thermal Incinerator ___ Flare _X_ Other (describe) Process Heater

___ Wet Plate Electrostatic Precipitator ___ Dry Plate Electrostatic Precipitator

List the pollutants for which this device is intended to control and the capture and control efficiencies.

Pollutant	Capture Efficiency	Control Efficiency
VOC	99.9%	99.8%

Explain the characteristic design parameters of this control device (flow rates, pressure drops, number of bags, size, temperatures, etc.).
Process Heater

Is this device subject to the CAM requirements of 40 C.F.R. 64? ___ Yes _X_ No

If Yes, **Complete ATTACHMENT H**

If No**, Provide justification.** Existing Title V monitoring in place and subject to NESHAP standard.

Describe the parameters monitored and/or methods used to indicate performance of this control device.

Transition temperature is continuously recorded.

ATTACHMENT G - Air Pollution Control Device Form

Control device ID number: L14-M-4080	**List all emission units associated with this control device.** L14-F-4080	
Manufacturer: Flex-Kleen	**Model number:** 100-CTT-21	**Installation date:** 1986

Type of Air Pollution Control Device:

_X_ Baghouse/Fabric Filter	___ Venturi Scrubber	___ Multiclone
___ Carbon Bed Adsorber	___ Packed Tower Scrubber	___ Single Cyclone
___ Carbon Drum(s)	___ Other Wet Scrubber	___ Cyclone Bank
___ Catalytic Incinerator	___ Condenser	___ Settling Chamber
___ Thermal Incinerator	___ Flare	___ Other (describe) _____
___ Wet Plate Electrostatic Precipitator		___ Dry Plate Electrostatic Precipitator

List the pollutants for which this device is intended to control and the capture and control efficiencies.

Pollutant	Capture Efficiency	Control Efficiency
PM	99.9%	99.0%

Explain the characteristic design parameters of this control device (flow rates, pressure drops, number of bags, size, temperatures, etc.).
Baghouse uses polyester or equivalent cloth materials.

Is this device subject to the CAM requirements of 40 C.F.R. 64? ___ Yes _X_ No

If Yes, **Complete ATTACHMENT H**

If No**, Provide justification.** Existing Title V monitoring in place and PTE to device is less than 100 tpy.

Describe the parameters monitored and/or methods used to indicate performance of this control device.

Local pressure readouts are used to determine pressure drop.

ATTACHMENT G - Air Pollution Control Device Form

Control device ID number: L36-M-0607	**List all emission units associated with this control device.** L36-F-6040	
Manufacturer: Mikropul	**Model number:** 8B	**Installation date:** 1992

Type of Air Pollution Control Device:

_X_ Baghouse/Fabric Filter ___ Venturi Scrubber ___ Multiclone

___ Carbon Bed Adsorber ___ Packed Tower Scrubber ___ Single Cyclone

___ Carbon Drum(s) ___ Other Wet Scrubber ___ Cyclone Bank

___ Catalytic Incinerator ___ Condenser ___ Settling Chamber

___ Thermal Incinerator ___ Flare ___ Other (describe) _____

___ Wet Plate Electrostatic Precipitator ___ Dry Plate Electrostatic Precipitator

List the pollutants for which this device is intended to control and the capture and control efficiencies.

Pollutant	Capture Efficiency	Control Efficiency
PM	99.9%	99.0%

Explain the characteristic design parameters of this control device (flow rates, pressure drops, number of bags, size, temperatures, etc.).
Baghouse uses polyester or equivalent cloth materials.

Is this device subject to the CAM requirements of 40 C.F.R. 64? ___ Yes _X_ No

If Yes, **Complete ATTACHMENT H**

If No**, Provide justification.** Existing Title V monitoring in place and PTE to device is less than 100 tpy.

Describe the parameters monitored and/or methods used to indicate performance of this control device.

Local pressure readouts are used to determine pressure drop.

ATTACHMENT G - Air Pollution Control Device Form

Control device ID number: C2A-M-5350	**List all emission units associated with this control device.** C2A-E-5240/C2A-B-5010 & C2B-E-5250/C2B-B-7020	
Manufacturer: Mikropul	**Model number:** 340-S-8 THR	**Installation date:** 1988

Type of Air Pollution Control Device:

_X_ Baghouse/Fabric Filter	___ Venturi Scrubber	___ Multiclone
___ Carbon Bed Adsorber	___ Packed Tower Scrubber	___ Single Cyclone
___ Carbon Drum(s)	___ Other Wet Scrubber	___ Cyclone Bank
___ Catalytic Incinerator	___ Condenser	___ Settling Chamber
___ Thermal Incinerator	___ Flare	___ Other (describe) _____
___ Wet Plate Electrostatic Precipitator		___ Dry Plate Electrostatic Precipitator

List the pollutants for which this device is intended to control and the capture and control efficiencies.

Pollutant	Capture Efficiency	Control Efficiency
PM	99.9%	99.0%

Explain the characteristic design parameters of this control device (flow rates, pressure drops, number of bags, size, temperatures, etc.).
Baghouse uses polyester or equivalent cloth materials.

Is this device subject to the CAM requirements of 40 C.F.R. 64? ___ Yes _X_ No

If Yes, **Complete ATTACHMENT H**

If No**, Provide justification.** Existing Title V monitoring in place and PTE to device is less than 100 tpy.

Describe the parameters monitored and/or methods used to indicate performance of this control device.

Local pressure readouts are used to determine pressure drop.

ATTACHMENT G - Air Pollution Control Device Form

Control device ID number: C2A-M-2601	**List all emission units associated with this control device.** C2A-F-5410	
Manufacturer: Mikropul	**Model number:** 8B	**Installation date:** 1988

Type of Air Pollution Control Device:

_X_ Baghouse/Fabric Filter ___ Venturi Scrubber ___ Multiclone

___ Carbon Bed Adsorber ___ Packed Tower Scrubber ___ Single Cyclone

___ Carbon Drum(s) ___ Other Wet Scrubber ___ Cyclone Bank

___ Catalytic Incinerator ___ Condenser ___ Settling Chamber

___ Thermal Incinerator ___ Flare ___ Other (describe) _____

___ Wet Plate Electrostatic Precipitator ___ Dry Plate Electrostatic Precipitator

List the pollutants for which this device is intended to control and the capture and control efficiencies.

Pollutant	Capture Efficiency	Control Efficiency
PM	99.9%	99.0%

Explain the characteristic design parameters of this control device (flow rates, pressure drops, number of bags, size, temperatures, etc.).
Baghouse uses polyester or equivalent cloth materials.

Is this device subject to the CAM requirements of 40 C.F.R. 64? ___ Yes _X_ No

If Yes, **Complete ATTACHMENT H**

If No**, Provide justification.** Existing Title V monitoring in place and PTE to device is less than 100 tpy.

Describe the parameters monitored and/or methods used to indicate performance of this control device.

Local pressure readouts are used to determine pressure drop.

ATTACHMENT G - Air Pollution Control Device Form

Control device ID number: L21-M-1050	**List all emission units associated with this control device.** L21-F-1020	
Manufacturer: Mikropul	**Model number:** 8B	**Installation date:** 1987

Type of Air Pollution Control Device:

_X_ Baghouse/Fabric Filter	___ Venturi Scrubber	___ Multiclone
___ Carbon Bed Adsorber	___ Packed Tower Scrubber	___ Single Cyclone
___ Carbon Drum(s)	___ Other Wet Scrubber	___ Cyclone Bank
___ Catalytic Incinerator	___ Condenser	___ Settling Chamber
___ Thermal Incinerator	___ Flare	___ Other (describe) _____
___ Wet Plate Electrostatic Precipitator		___ Dry Plate Electrostatic Precipitator

List the pollutants for which this device is intended to control and the capture and control efficiencies.

Pollutant	Capture Efficiency	Control Efficiency
PM	99.9%	99.0%

Explain the characteristic design parameters of this control device (flow rates, pressure drops, number of bags, size, temperatures, etc.).
Baghouse uses polyester or equivalent cloth materials.

Is this device subject to the CAM requirements of 40 C.F.R. 64? ___ Yes _X_ No

If Yes, **Complete ATTACHMENT H**

If No**, Provide justification.** Existing Title V monitoring in place and PTE to device is less than 100 tpy.

Describe the parameters monitored and/or methods used to indicate performance of this control device.

Local pressure readouts are used to determine pressure drop.

ATTACHMENT G - Air Pollution Control Device Form

Control device ID number: L22-M-2120	**List all emission units associated with this control device.** L22-F-2040	
Manufacturer: Mikropul	**Model number:** 8B	**Installation date:** 1987

Type of Air Pollution Control Device:

_X_ Baghouse/Fabric Filter ___ Venturi Scrubber ___ Multiclone

___ Carbon Bed Adsorber ___ Packed Tower Scrubber ___ Single Cyclone

___ Carbon Drum(s) ___ Other Wet Scrubber ___ Cyclone Bank

___ Catalytic Incinerator ___ Condenser ___ Settling Chamber

___ Thermal Incinerator ___ Flare ___ Other (describe) _____

___ Wet Plate Electrostatic Precipitator ___ Dry Plate Electrostatic Precipitator

List the pollutants for which this device is intended to control and the capture and control efficiencies.

Pollutant	Capture Efficiency	Control Efficiency
PM	99.9%	99.0%

Explain the characteristic design parameters of this control device (flow rates, pressure drops, number of bags, size, temperatures, etc.).
Baghouse uses polyester or equivalent cloth materials.

Is this device subject to the CAM requirements of 40 C.F.R. 64? ___ Yes _X_ No

If Yes, **Complete ATTACHMENT H**

If No**, Provide justification.** Existing Title V monitoring in place and PTE to device is less than 100 tpy.

Describe the parameters monitored and/or methods used to indicate performance of this control device.

Local pressure readouts are used to determine pressure drop.

ATTACHMENT G - Air Pollution Control Device Form

Control device ID number: M-2603	**List all emission units associated with this control device.** C2B-F-5420 & C2C-R-5060	
Manufacturer: Mikropul	**Model number:** 16-8-2	**Installation date:** 1988

Type of Air Pollution Control Device:

_X_ Baghouse/Fabric Filter	___ Venturi Scrubber	___ Multiclone
___ Carbon Bed Adsorber	___ Packed Tower Scrubber	___ Single Cyclone
___ Carbon Drum(s)	___ Other Wet Scrubber	___ Cyclone Bank
___ Catalytic Incinerator	___ Condenser	___ Settling Chamber
___ Thermal Incinerator	___ Flare	___ Other (describe) _____
___ Wet Plate Electrostatic Precipitator		___ Dry Plate Electrostatic Precipitator

List the pollutants for which this device is intended to control and the capture and control efficiencies.

Pollutant	Capture Efficiency	Control Efficiency
PM	99.9%	99.0%

Explain the characteristic design parameters of this control device (flow rates, pressure drops, number of bags, size, temperatures, etc.).
Baghouse uses polyester or equivalent cloth materials.

Is this device subject to the CAM requirements of 40 C.F.R. 64? ___ Yes _X_ No

If Yes, **Complete ATTACHMENT H**

If No**, Provide justification.** Existing Title V monitoring in place and PTE to device is less than 100 tpy.

Describe the parameters monitored and/or methods used to indicate performance of this control device.

Local pressure readouts are used to determine pressure drop.

ATTACHMENT G - Air Pollution Control Device Form

Control device ID number: C2D-M-0520	**List all emission units associated with this control device.** C2D-E-5280	
Manufacturer: Mikropul	**Model number:** 196-S-8 TRH	**Installation date:** 1992

Type of Air Pollution Control Device:

_X_ Baghouse/Fabric Filter	___ Venturi Scrubber	___ Multiclone
___ Carbon Bed Adsorber	___ Packed Tower Scrubber	___ Single Cyclone
___ Carbon Drum(s)	___ Other Wet Scrubber	___ Cyclone Bank
___ Catalytic Incinerator	___ Condenser	___ Settling Chamber
___ Thermal Incinerator	___ Flare	___ Other (describe) _____
___ Wet Plate Electrostatic Precipitator		___ Dry Plate Electrostatic Precipitator

List the pollutants for which this device is intended to control and the capture and control efficiencies.

Pollutant	Capture Efficiency	Control Efficiency
PM	99.9%	99.0%

Explain the characteristic design parameters of this control device (flow rates, pressure drops, number of bags, size, temperatures, etc.).
Baghouse uses polyester or equivalent cloth materials.

Is this device subject to the CAM requirements of 40 C.F.R. 64? ___ Yes _X_ No

If Yes, **Complete ATTACHMENT H**

If No**, Provide justification.** Existing Title V monitoring in place and PTE to device is less than 100 tpy.

Describe the parameters monitored and/or methods used to indicate performance of this control device.

Local pressure readouts are used to determine pressure drop.

ATTACHMENT G - Air Pollution Control Device Form

Control device ID number: L14-M-4070	**List all emission units associated with this control device.** L14-F-4070	
Manufacturer: Flex-Kleen	**Model number:** 100-CTT-21	**Installation date:** 1986

Type of Air Pollution Control Device:

_X_ Baghouse/Fabric Filter	___ Venturi Scrubber	___ Multiclone
___ Carbon Bed Adsorber	___ Packed Tower Scrubber	___ Single Cyclone
___ Carbon Drum(s)	___ Other Wet Scrubber	___ Cyclone Bank
___ Catalytic Incinerator	___ Condenser	___ Settling Chamber
___ Thermal Incinerator	___ Flare	___ Other (describe) _____
___ Wet Plate Electrostatic Precipitator		___ Dry Plate Electrostatic Precipitator

List the pollutants for which this device is intended to control and the capture and control efficiencies.

Pollutant	Capture Efficiency	Control Efficiency
PM	99.9%	99.0%

Explain the characteristic design parameters of this control device (flow rates, pressure drops, number of bags, size, temperatures, etc.).
Baghouse uses polyester or equivalent cloth materials.

Is this device subject to the CAM requirements of 40 C.F.R. 64? ___ Yes _X_ No

If Yes, **Complete ATTACHMENT H**

If No**, Provide justification.** Existing Title V monitoring in place and PTE to device is less than 100 tpy.

Describe the parameters monitored and/or methods used to indicate performance of this control device.

Local pressure readouts are used to determine pressure drop.

M&G Polymers
Emissions from Hot Oil Heater C2T-B-9001
(tpy)

CO	NOx	PM	SO2	VOC	EG	AA
3.6	6.7	0.16	0.2	0.46	0.19	0.13

CSS-8

ATTACHMENT G - Air Pollution Control Device Form

Control device ID number: L37-M-7130	**List all emission units associated with this control device.** L37-F-7050	
Manufacturer: Flex-Kleen or Equivalent	**Model number:** NA	**Installation date:** 1990

Type of Air Pollution Control Device:

_X_ Baghouse/Fabric Filter ___ Venturi Scrubber ___ Multiclone

___ Carbon Bed Adsorber ___ Packed Tower Scrubber ___ Single Cyclone

___ Carbon Drum(s) ___ Other Wet Scrubber ___ Cyclone Bank

___ Catalytic Incinerator ___ Condenser ___ Settling Chamber

___ Thermal Incinerator ___ Flare ___ Other (describe) _____

___ Wet Plate Electrostatic Precipitator ___ Dry Plate Electrostatic Precipitator

List the pollutants for which this device is intended to control and the capture and control efficiencies.

Pollutant	Capture Efficiency	Control Efficiency
PM	99.9%	99.0%

Explain the characteristic design parameters of this control device (flow rates, pressure drops, number of bags, size, temperatures, etc.).
Baghouse uses polyester or equivalent cloth materials.

Is this device subject to the CAM requirements of 40 C.F.R. 64? ___ Yes _X_ No

If Yes, **Complete ATTACHMENT H**

If No**, Provide justification.** Existing Title V monitoring in place and PTE to device is less than 100 tpy.

Describe the parameters monitored and/or methods used to indicate performance of this control device.

Local pressure readouts are used to determine pressure drop.

ATTACHMENT G - Air Pollution Control Device Form

Control device ID number: L11-M-1020	**List all emission units associated with this control device.** L11-F-1020	
Manufacturer: Flex-Kleen	**Model number:** 100-CTT-21	**Installation date:** 1987

Type of Air Pollution Control Device:

_X_ Baghouse/Fabric Filter	___ Venturi Scrubber	___ Multiclone
___ Carbon Bed Adsorber	___ Packed Tower Scrubber	___ Single Cyclone
___ Carbon Drum(s)	___ Other Wet Scrubber	___ Cyclone Bank
___ Catalytic Incinerator	___ Condenser	___ Settling Chamber
___ Thermal Incinerator	___ Flare	___ Other (describe) _____
___ Wet Plate Electrostatic Precipitator		___ Dry Plate Electrostatic Precipitator

List the pollutants for which this device is intended to control and the capture and control efficiencies.

Pollutant	Capture Efficiency	Control Efficiency
PM	99.9%	99.0%

Explain the characteristic design parameters of this control device (flow rates, pressure drops, number of bags, size, temperatures, etc.).
Baghouse uses polyester or equivalent cloth materials.

Is this device subject to the CAM requirements of 40 C.F.R. 64? ___ Yes _X_ No

If Yes, **Complete ATTACHMENT H**

If No**, Provide justification.** Existing Title V monitoring in place and PTE to device is less than 100 tpy.

Describe the parameters monitored and/or methods used to indicate performance of this control device.

Local pressure readouts are used to determine pressure drop.

ATTACHMENT G - Air Pollution Control Device Form

Control device ID number: S8A-M-2390	**List all emission units associated with this control device.** S8A-F-2430	
Manufacturer: Flex-Kleen or Equivalent	**Model number:** NA	**Installation date:** 1990

Type of Air Pollution Control Device:

_X_ Baghouse/Fabric Filter	___ Venturi Scrubber	___ Multiclone
___ Carbon Bed Adsorber	___ Packed Tower Scrubber	___ Single Cyclone
___ Carbon Drum(s)	___ Other Wet Scrubber	___ Cyclone Bank
___ Catalytic Incinerator	___ Condenser	___ Settling Chamber
___ Thermal Incinerator	___ Flare	___ Other (describe) _____
___ Wet Plate Electrostatic Precipitator		___ Dry Plate Electrostatic Precipitator

List the pollutants for which this device is intended to control and the capture and control efficiencies.

Pollutant	Capture Efficiency	Control Efficiency
PM	99.9%	99.0%

Explain the characteristic design parameters of this control device (flow rates, pressure drops, number of bags, size, temperatures, etc.).
Baghouse uses polyester or equivalent cloth materials.

Is this device subject to the CAM requirements of 40 C.F.R. 64? ___ Yes _X_ No

If Yes, **Complete ATTACHMENT H**

If No**, Provide justification.** Existing Title V monitoring in place and PTE to device is less than 100 tpy.

Describe the parameters monitored and/or methods used to indicate performance of this control device.

Local pressure readouts are used to determine pressure drop.

ATTACHMENT G - Air Pollution Control Device Form

Control device ID number: S8A-M-3350	**List all emission units associated with this control device.** S8A-E-3240/S8A-B-3010	
Manufacturer: Flex-Kleen or Equivalent	**Model number:** NA	**Installation date:** 1990

Type of Air Pollution Control Device:

_X_ Baghouse/Fabric Filter	___ Venturi Scrubber	___ Multiclone
___ Carbon Bed Adsorber	___ Packed Tower Scrubber	___ Single Cyclone
___ Carbon Drum(s)	___ Other Wet Scrubber	___ Cyclone Bank
___ Catalytic Incinerator	___ Condenser	___ Settling Chamber
___ Thermal Incinerator	___ Flare	___ Other (describe) _____
___ Wet Plate Electrostatic Precipitator		___ Dry Plate Electrostatic Precipitator

List the pollutants for which this device is intended to control and the capture and control efficiencies.

Pollutant	Capture Efficiency	Control Efficiency
PM	99.9%	99.0%

Explain the characteristic design parameters of this control device (flow rates, pressure drops, number of bags, size, temperatures, etc.).
Baghouse uses polyester or equivalent cloth materials.

Is this device subject to the CAM requirements of 40 C.F.R. 64? ___ Yes _X_ No

If Yes, **Complete ATTACHMENT H**

If No**, Provide justification.** Existing Title V monitoring in place and PTE to device is less than 100 tpy.

Describe the parameters monitored and/or methods used to indicate performance of this control device.

Local pressure readouts are used to determine pressure drop.

ATTACHMENT G - Air Pollution Control Device Form

Control device ID number: S8B-M-2420	**List all emission units associated with this control device.** S8B-E-2250/S8B-B-2020	
Manufacturer: Mikropul	**Model number:** 1005-10-40 TRC	**Installation date:** 1992

Type of Air Pollution Control Device:

_X_ Baghouse/Fabric Filter	___ Venturi Scrubber	___ Multiclone
___ Carbon Bed Adsorber	___ Packed Tower Scrubber	___ Single Cyclone
___ Carbon Drum(s)	___ Other Wet Scrubber	___ Cyclone Bank
___ Catalytic Incinerator	___ Condenser	___ Settling Chamber
___ Thermal Incinerator	___ Flare	___ Other (describe) _____
___ Wet Plate Electrostatic Precipitator		___ Dry Plate Electrostatic Precipitator

List the pollutants for which this device is intended to control and the capture and control efficiencies.

Pollutant	Capture Efficiency	Control Efficiency
PM	99.9%	99.0%

Explain the characteristic design parameters of this control device (flow rates, pressure drops, number of bags, size, temperatures, etc.).
Baghouse uses polyester or equivalent cloth materials.

Is this device subject to the CAM requirements of 40 C.F.R. 64? ___ Yes _X_ No

If Yes, **Complete ATTACHMENT H**

If No**, Provide justification.** Existing Title V monitoring in place and PTE to device is less than 100 tpy.

Describe the parameters monitored and/or methods used to indicate performance of this control device.

Local pressure readouts are used to determine pressure drop.

ATTACHMENT G - Air Pollution Control Device Form

Control device ID number: S8D-M-1520	**List all emission units associated with this control device.** S8D-E-1280	
Manufacturer: Flex-Kleen or Equivalent	**Model number:** NA	**Installation date:** 1990

Type of Air Pollution Control Device:

_X_ Baghouse/Fabric Filter	___ Venturi Scrubber	___ Multiclone
___ Carbon Bed Adsorber	___ Packed Tower Scrubber	___ Single Cyclone
___ Carbon Drum(s)	___ Other Wet Scrubber	___ Cyclone Bank
___ Catalytic Incinerator	___ Condenser	___ Settling Chamber
___ Thermal Incinerator	___ Flare	___ Other (describe) _____
___ Wet Plate Electrostatic Precipitator		___ Dry Plate Electrostatic Precipitator

List the pollutants for which this device is intended to control and the capture and control efficiencies.

Pollutant	Capture Efficiency	Control Efficiency
PM	99.9%	99.0%

Explain the characteristic design parameters of this control device (flow rates, pressure drops, number of bags, size, temperatures, etc.).
Baghouse uses polyester or equivalent cloth materials.

Is this device subject to the CAM requirements of 40 C.F.R. 64? ___ Yes _X_ No

If Yes, **Complete ATTACHMENT H**

If No**, Provide justification.** Existing Title V monitoring in place and PTE to device is less than 100 tpy.

Describe the parameters monitored and/or methods used to indicate performance of this control device.

Local pressure readouts are used to determine pressure drop.

ATTACHMENT G - Air Pollution Control Device Form

Control device ID number: L12-M-2030	**List all emission units associated with this control device.** L12-F-2030	
Manufacturer: Mikropul	**Model number:** 8B	**Installation date:** 1987

Type of Air Pollution Control Device:

_X_ Baghouse/Fabric Filter ___ Venturi Scrubber ___ Multiclone

___ Carbon Bed Adsorber ___ Packed Tower Scrubber ___ Single Cyclone

___ Carbon Drum(s) ___ Other Wet Scrubber ___ Cyclone Bank

___ Catalytic Incinerator ___ Condenser ___ Settling Chamber

___ Thermal Incinerator ___ Flare ___ Other (describe) _____

___ Wet Plate Electrostatic Precipitator ___ Dry Plate Electrostatic Precipitator

List the pollutants for which this device is intended to control and the capture and control efficiencies.

Pollutant	Capture Efficiency	Control Efficiency
PM	99.9%	99.0%

Explain the characteristic design parameters of this control device (flow rates, pressure drops, number of bags, size, temperatures, etc.).
Baghouse uses polyester or equivalent cloth materials.

Is this device subject to the CAM requirements of 40 C.F.R. 64? ___ Yes _X_ No

If Yes, **Complete ATTACHMENT H**

If No**, Provide justification.** Existing Title V monitoring in place and PTE to device is less than 100 tpy.

Describe the parameters monitored and/or methods used to indicate performance of this control device.

Local pressure readouts are used to determine pressure drop.

ATTACHMENT G - Air Pollution Control Device Form

Control device ID number: L12-M-2040	**List all emission units associated with this control device.** L12-F-2040	
Manufacturer: Mikropul	**Model number:** 8B	**Installation date:** 1987

Type of Air Pollution Control Device:

_X_ Baghouse/Fabric Filter ___ Venturi Scrubber ___ Multiclone

___ Carbon Bed Adsorber ___ Packed Tower Scrubber ___ Single Cyclone

___ Carbon Drum(s) ___ Other Wet Scrubber ___ Cyclone Bank

___ Catalytic Incinerator ___ Condenser ___ Settling Chamber

___ Thermal Incinerator ___ Flare ___ Other (describe) _____

___ Wet Plate Electrostatic Precipitator ___ Dry Plate Electrostatic Precipitator

List the pollutants for which this device is intended to control and the capture and control efficiencies.

Pollutant	Capture Efficiency	Control Efficiency
PM	99.9%	99.0%

Explain the characteristic design parameters of this control device (flow rates, pressure drops, number of bags, size, temperatures, etc.).
Baghouse uses polyester or equivalent cloth materials.

Is this device subject to the CAM requirements of 40 C.F.R. 64? ___ Yes _X_ No

If Yes, **Complete ATTACHMENT H**

If No**, Provide justification.** Existing Title V monitoring in place and PTE to device is less than 100 tpy.

Describe the parameters monitored and/or methods used to indicate performance of this control device.

Local pressure readouts are used to determine pressure drop.

ATTACHMENT G - Air Pollution Control Device Form

Control device ID number: L13-M-3050	**List all emission units associated with this control device.** L13-F-3050	
Manufacturer: Flex-Kleen	**Model number:** 100-CTT-21	**Installation date:** 1986

Type of Air Pollution Control Device:

_X_ Baghouse/Fabric Filter	___ Venturi Scrubber	___ Multiclone
___ Carbon Bed Adsorber	___ Packed Tower Scrubber	___ Single Cyclone
___ Carbon Drum(s)	___ Other Wet Scrubber	___ Cyclone Bank
___ Catalytic Incinerator	___ Condenser	___ Settling Chamber
___ Thermal Incinerator	___ Flare	___ Other (describe) _____
___ Wet Plate Electrostatic Precipitator		___ Dry Plate Electrostatic Precipitator

List the pollutants for which this device is intended to control and the capture and control efficiencies.

Pollutant	Capture Efficiency	Control Efficiency
PM	99.9%	99.0%

Explain the characteristic design parameters of this control device (flow rates, pressure drops, number of bags, size, temperatures, etc.).
Baghouse uses polyester or equivalent cloth materials.

Is this device subject to the CAM requirements of 40 C.F.R. 64? ___ Yes _X_ No

If Yes, **Complete ATTACHMENT H**

If No**, Provide justification.** Existing Title V monitoring in place and PTE to device is less than 100 tpy.

Describe the parameters monitored and/or methods used to indicate performance of this control device.

Local pressure readouts are used to determine pressure drop.

ATTACHMENT G - Air Pollution Control Device Form

Control device ID number: L13-M-3060	**List all emission units associated with this control device.** L13-F-3060	
Manufacturer: Flex-Kleen	**Model number:** 100-CTT-21	**Installation date:** 1986

Type of Air Pollution Control Device:

_X_ Baghouse/Fabric Filter	___ Venturi Scrubber	___ Multiclone
___ Carbon Bed Adsorber	___ Packed Tower Scrubber	___ Single Cyclone
___ Carbon Drum(s)	___ Other Wet Scrubber	___ Cyclone Bank
___ Catalytic Incinerator	___ Condenser	___ Settling Chamber
___ Thermal Incinerator	___ Flare	___ Other (describe) _____
___ Wet Plate Electrostatic Precipitator		___ Dry Plate Electrostatic Precipitator

List the pollutants for which this device is intended to control and the capture and control efficiencies.

Pollutant	Capture Efficiency	Control Efficiency
PM	99.9%	99.0%

Explain the characteristic design parameters of this control device (flow rates, pressure drops, number of bags, size, temperatures, etc.).
Baghouse uses polyester or equivalent cloth materials.

Is this device subject to the CAM requirements of 40 C.F.R. 64? ___ Yes _X_ No

If Yes, **Complete ATTACHMENT H**

If No**, Provide justification.** Existing Title V monitoring in place and PTE to device is less than 100 tpy.

Describe the parameters monitored and/or methods used to indicate performance of this control device.

Local pressure readouts are used to determine pressure drop.

ATTACHMENT G - Air Pollution Control Device Form

Control device ID number: S8-A-M-1590	**List all emission units associated with this control device.** S8E-F-1440 & S8A-M-1610	
Manufacturer: Flex-Kleen or Equivalent	**Model number:** NA	**Installation date:** 1993

Type of Air Pollution Control Device:

_X_ Baghouse/Fabric Filter	___ Venturi Scrubber	___ Multiclone
___ Carbon Bed Adsorber	___ Packed Tower Scrubber	___ Single Cyclone
___ Carbon Drum(s)	___ Other Wet Scrubber	___ Cyclone Bank
___ Catalytic Incinerator	___ Condenser	___ Settling Chamber
___ Thermal Incinerator	___ Flare	___ Other (describe) _____
___ Wet Plate Electrostatic Precipitator		___ Dry Plate Electrostatic Precipitator

List the pollutants for which this device is intended to control and the capture and control efficiencies.

Pollutant	Capture Efficiency	Control Efficiency
PM	99.9%	99.0%

Explain the characteristic design parameters of this control device (flow rates, pressure drops, number of bags, size, temperatures, etc.).
Baghouse uses polyester or equivalent cloth materials.

Is this device subject to the CAM requirements of 40 C.F.R. 64? ___ Yes _X_ No

If Yes, **Complete ATTACHMENT H**

If No**, Provide justification.** Existing Title V monitoring in place and PTE to device is less than 100 tpy.

Describe the parameters monitored and/or methods used to indicate performance of this control device.

Local pressure readouts are used to determine pressure drop.

ATTACHMENT G - Air Pollution Control Device Form

Control device ID number: L11-M-1010	**List all emission units associated with this control device.** L11-F-1010	
Manufacturer: Flex-Kleen	**Model number:** 100-CTT-21	**Installation date:** 1987

Type of Air Pollution Control Device:

_X_ Baghouse/Fabric Filter ___ Venturi Scrubber ___ Multiclone

___ Carbon Bed Adsorber ___ Packed Tower Scrubber ___ Single Cyclone

___ Carbon Drum(s) ___ Other Wet Scrubber ___ Cyclone Bank

___ Catalytic Incinerator ___ Condenser ___ Settling Chamber

___ Thermal Incinerator ___ Flare ___ Other (describe) _____

___ Wet Plate Electrostatic Precipitator ___ Dry Plate Electrostatic Precipitator

List the pollutants for which this device is intended to control and the capture and control efficiencies.

Pollutant	Capture Efficiency	Control Efficiency
PM	99.9%	99.0%

Explain the characteristic design parameters of this control device (flow rates, pressure drops, number of bags, size, temperatures, etc.).
Baghouse uses polyester or equivalent cloth materials.

Is this device subject to the CAM requirements of 40 C.F.R. 64? ___ Yes _X_ No

If Yes, **Complete ATTACHMENT H**

If No**, Provide justification.** Existing Title V monitoring in place and PTE to device is less than 100 tpy.

Describe the parameters monitored and/or methods used to indicate performance of this control device.

Local pressure readouts are used to determine pressure drop.

CSS-9

ATTACHMENT G - Air Pollution Control Device Form

Control device ID number: L15-M-2701A	**List all emission units associated with this control device.** L14-F-2701A	
Manufacturer: Mikropul	**Model number:** 8B	**Installation date:** 1990

Type of Air Pollution Control Device:

_X_ Baghouse/Fabric Filter ___ Venturi Scrubber ___ Multiclone

___ Carbon Bed Adsorber ___ Packed Tower Scrubber ___ Single Cyclone

___ Carbon Drum(s) ___ Other Wet Scrubber ___ Cyclone Bank

___ Catalytic Incinerator ___ Condenser ___ Settling Chamber

___ Thermal Incinerator ___ Flare ___ Other (describe) _____

___ Wet Plate Electrostatic Precipitator ___ Dry Plate Electrostatic Precipitator

List the pollutants for which this device is intended to control and the capture and control efficiencies.

Pollutant	Capture Efficiency	Control Efficiency
PM	99.9%	99.0%

Explain the characteristic design parameters of this control device (flow rates, pressure drops, number of bags, size, temperatures, etc.).
Baghouse uses polyester or equivalent cloth materials.

Is this device subject to the CAM requirements of 40 C.F.R. 64? ___ Yes _X_ No

If Yes, **Complete ATTACHMENT H**

If No**, Provide justification.** Existing Title V monitoring in place and PTE to device is less than 100 tpy.

Describe the parameters monitored and/or methods used to indicate performance of this control device.

Local pressure readouts are used to determine pressure drop.

ATTACHMENT G - Air Pollution Control Device Form

Control device ID number: L15-M-1701B	**List all emission units associated with this control device.** L14-F-1701B	
Manufacturer: Mikropul	**Model number:** 8B	**Installation date:** 1992

Type of Air Pollution Control Device:

_X_ Baghouse/Fabric Filter ___ Venturi Scrubber ___ Multiclone

___ Carbon Bed Adsorber ___ Packed Tower Scrubber ___ Single Cyclone

___ Carbon Drum(s) ___ Other Wet Scrubber ___ Cyclone Bank

___ Catalytic Incinerator ___ Condenser ___ Settling Chamber

___ Thermal Incinerator ___ Flare ___ Other (describe) _____

___ Wet Plate Electrostatic Precipitator ___ Dry Plate Electrostatic Precipitator

List the pollutants for which this device is intended to control and the capture and control efficiencies.

Pollutant	Capture Efficiency	Control Efficiency
PM	99.9%	99.0%

Explain the characteristic design parameters of this control device (flow rates, pressure drops, number of bags, size, temperatures, etc.).
Baghouse uses polyester or equivalent cloth materials.

Is this device subject to the CAM requirements of 40 C.F.R. 64? ___ Yes _X_ No

If Yes, **Complete ATTACHMENT H**

If No**, Provide justification.** Existing Title V monitoring in place and PTE to device is less than 100 tpy.

Describe the parameters monitored and/or methods used to indicate performance of this control device.

Local pressure readouts are used to determine pressure drop.

ATTACHMENT G - Air Pollution Control Device Form

Control device ID number: L15-M-2701B	**List all emission units associated with this control device.** L14-F-2701B	
Manufacturer: Mikropul	**Model number:** 8B	**Installation date:** 1990

Type of Air Pollution Control Device:

_X_ Baghouse/Fabric Filter ___ Venturi Scrubber ___ Multiclone

___ Carbon Bed Adsorber ___ Packed Tower Scrubber ___ Single Cyclone

___ Carbon Drum(s) ___ Other Wet Scrubber ___ Cyclone Bank

___ Catalytic Incinerator ___ Condenser ___ Settling Chamber

___ Thermal Incinerator ___ Flare ___ Other (describe) _____

___ Wet Plate Electrostatic Precipitator ___ Dry Plate Electrostatic Precipitator

List the pollutants for which this device is intended to control and the capture and control efficiencies.

Pollutant	Capture Efficiency	Control Efficiency
PM	99.9%	99.0%

Explain the characteristic design parameters of this control device (flow rates, pressure drops, number of bags, size, temperatures, etc.).
Baghouse uses polyester or equivalent cloth materials.

Is this device subject to the CAM requirements of 40 C.F.R. 64? ___ Yes _X_ No

If Yes, **Complete ATTACHMENT H**

If No**, Provide justification.** Existing Title V monitoring in place and PTE to device is less than 100 tpy.

Describe the parameters monitored and/or methods used to indicate performance of this control device.

Local pressure readouts are used to determine pressure drop.

ATTACHMENT G - Air Pollution Control Device Form

Control device ID number: L17-M-7230	**List all emission units associated with this control device.** L17-F-7230	
Manufacturer: Mikropul	**Model number:** 25S-8-40-TR-C	**Installation date:** 1990

Type of Air Pollution Control Device:

_X_ Baghouse/Fabric Filter ___ Venturi Scrubber ___ Multiclone

___ Carbon Bed Adsorber ___ Packed Tower Scrubber ___ Single Cyclone

___ Carbon Drum(s) ___ Other Wet Scrubber ___ Cyclone Bank

___ Catalytic Incinerator ___ Condenser ___ Settling Chamber

___ Thermal Incinerator ___ Flare ___ Other (describe) _____

___ Wet Plate Electrostatic Precipitator ___ Dry Plate Electrostatic Precipitator

List the pollutants for which this device is intended to control and the capture and control efficiencies.

Pollutant	Capture Efficiency	Control Efficiency
PM	99.9%	99.0%

Explain the characteristic design parameters of this control device (flow rates, pressure drops, number of bags, size, temperatures, etc.).
Baghouse uses polyester or equivalent cloth materials.

Is this device subject to the CAM requirements of 40 C.F.R. 64? ___ Yes _X_ No

If Yes, **Complete ATTACHMENT H**

If No**, Provide justification.** Existing Title V monitoring in place and PTE to device is less than 100 tpy.

Describe the parameters monitored and/or methods used to indicate performance of this control device.

Local pressure readouts are used to determine pressure drop.

ATTACHMENT G - Air Pollution Control Device Form

Control device ID number: L15-M-1020	**List all emission units associated with this control device.** L15-F-1020	
Manufacturer: Flex-Kleen	**Model number:** 100-CTT-21	**Installation date:** 1987

Type of Air Pollution Control Device:

_X_ Baghouse/Fabric Filter	___ Venturi Scrubber	___ Multiclone
___ Carbon Bed Adsorber	___ Packed Tower Scrubber	___ Single Cyclone
___ Carbon Drum(s)	___ Other Wet Scrubber	___ Cyclone Bank
___ Catalytic Incinerator	___ Condenser	___ Settling Chamber
___ Thermal Incinerator	___ Flare	___ Other (describe) _____
___ Wet Plate Electrostatic Precipitator		___ Dry Plate Electrostatic Precipitator

List the pollutants for which this device is intended to control and the capture and control efficiencies.

Pollutant	Capture Efficiency	Control Efficiency
PM	99.9%	99.0%

Explain the characteristic design parameters of this control device (flow rates, pressure drops, number of bags, size, temperatures, etc.).
Baghouse uses polyester or equivalent cloth materials.

Is this device subject to the CAM requirements of 40 C.F.R. 64? ___ Yes _X_ No

If Yes, **Complete ATTACHMENT H**

If No**, Provide justification.** Existing Title V monitoring in place and PTE to device is less than 100 tpy.

Describe the parameters monitored and/or methods used to indicate performance of this control device.

Local pressure readouts are used to determine pressure drop.

ATTACHMENT G - Air Pollution Control Device Form

Control device ID number: L15-M-1701A	**List all emission units associated with this control device.** L14-F-1701A	
Manufacturer: Mikropul	**Model number:** 8B	**Installation date:** 1992

Type of Air Pollution Control Device:

_X_ Baghouse/Fabric Filter ___ Venturi Scrubber ___ Multiclone

___ Carbon Bed Adsorber ___ Packed Tower Scrubber ___ Single Cyclone

___ Carbon Drum(s) ___ Other Wet Scrubber ___ Cyclone Bank

___ Catalytic Incinerator ___ Condenser ___ Settling Chamber

___ Thermal Incinerator ___ Flare ___ Other (describe) _____

___ Wet Plate Electrostatic Precipitator ___ Dry Plate Electrostatic Precipitator

List the pollutants for which this device is intended to control and the capture and control efficiencies.

Pollutant	Capture Efficiency	Control Efficiency
PM	99.9%	99.0%

Explain the characteristic design parameters of this control device (flow rates, pressure drops, number of bags, size, temperatures, etc.).
Baghouse uses polyester or equivalent cloth materials.

Is this device subject to the CAM requirements of 40 C.F.R. 64? ___ Yes _X_ No

If Yes, **Complete ATTACHMENT H**

If No**, Provide justification.** Existing Title V monitoring in place and PTE to device is less than 100 tpy.

Describe the parameters monitored and/or methods used to indicate performance of this control device.

Local pressure readouts are used to determine pressure drop.

CSS-10

ATTACHMENT G - Air Pollution Control Device Form

Control device ID number: L3A-M-1050	**List all emission units associated with this control device.** L3A-F-1030	
Manufacturer: Mikropul	**Model number:** 8B	**Installation date:** 1992

Type of Air Pollution Control Device:

_X_ Baghouse/Fabric Filter ___ Venturi Scrubber ___ Multiclone

___ Carbon Bed Adsorber ___ Packed Tower Scrubber ___ Single Cyclone

___ Carbon Drum(s) ___ Other Wet Scrubber ___ Cyclone Bank

___ Catalytic Incinerator ___ Condenser ___ Settling Chamber

___ Thermal Incinerator ___ Flare ___ Other (describe) _____

___ Wet Plate Electrostatic Precipitator ___ Dry Plate Electrostatic Precipitator

List the pollutants for which this device is intended to control and the capture and control efficiencies.

Pollutant	Capture Efficiency	Control Efficiency
PM	99.9%	99.0%

Explain the characteristic design parameters of this control device (flow rates, pressure drops, number of bags, size, temperatures, etc.).
Baghouse uses polyester or equivalent cloth materials.

Is this device subject to the CAM requirements of 40 C.F.R. 64? ___ Yes _X_ No

If Yes, **Complete ATTACHMENT H**

If No**, Provide justification.** Existing Title V monitoring in place and PTE to device is less than 100 tpy.

Describe the parameters monitored and/or methods used to indicate performance of this control device.

Local pressure readouts are used to determine pressure drop.

ATTACHMENT G - Air Pollution Control Device Form

Control device ID number: C3E-M-1590	**List all emission units associated with this control device.** C3E-F-1440	
Manufacturer: Mikropul	**Model number:** 255-8-40 TRC	**Installation date:** 1992

Type of Air Pollution Control Device:

_X_ Baghouse/Fabric Filter	___ Venturi Scrubber	___ Multiclone
___ Carbon Bed Adsorber	___ Packed Tower Scrubber	___ Single Cyclone
___ Carbon Drum(s)	___ Other Wet Scrubber	___ Cyclone Bank
___ Catalytic Incinerator	___ Condenser	___ Settling Chamber
___ Thermal Incinerator	___ Flare	___ Other (describe) _____
___ Wet Plate Electrostatic Precipitator		___ Dry Plate Electrostatic Precipitator

List the pollutants for which this device is intended to control and the capture and control efficiencies.

Pollutant	Capture Efficiency	Control Efficiency
PM	99.9%	99.0%

Explain the characteristic design parameters of this control device (flow rates, pressure drops, number of bags, size, temperatures, etc.).
Baghouse uses polyester or equivalent cloth materials.

Is this device subject to the CAM requirements of 40 C.F.R. 64? ___ Yes _X_ No

If Yes, **Complete ATTACHMENT H**

If No**, Provide justification.** Existing Title V monitoring in place and PTE to device is less than 100 tpy.

Describe the parameters monitored and/or methods used to indicate performance of this control device.

Local pressure readouts are used to determine pressure drop.

ATTACHMENT G - Air Pollution Control Device Form

Control device ID number: C3A-M-3350	**List all emission units associated with this control device.** C3A-E-3240	
Manufacturer: Flex-Kleen	**Model number:** 120WXTC34M276ARRIIIG	**Installation date:** 1993

Type of Air Pollution Control Device:

_X_ Baghouse/Fabric Filter	___ Venturi Scrubber	___ Multiclone
___ Carbon Bed Adsorber	___ Packed Tower Scrubber	___ Single Cyclone
___ Carbon Drum(s)	___ Other Wet Scrubber	___ Cyclone Bank
___ Catalytic Incinerator	___ Condenser	___ Settling Chamber
___ Thermal Incinerator	___ Flare	___ Other (describe) _____
___ Wet Plate Electrostatic Precipitator		___ Dry Plate Electrostatic Precipitator

List the pollutants for which this device is intended to control and the capture and control efficiencies.

Pollutant	Capture Efficiency	Control Efficiency
PM	99.9%	99.0%

Explain the characteristic design parameters of this control device (flow rates, pressure drops, number of bags, size, temperatures, etc.).
Baghouse uses polyester or equivalent cloth materials.

Is this device subject to the CAM requirements of 40 C.F.R. 64? ___ Yes _X_ No

If Yes, **Complete ATTACHMENT H**

If No**, Provide justification.** Existing Title V monitoring in place and PTE to device is less than 100 tpy.

Describe the parameters monitored and/or methods used to indicate performance of this control device.

Local pressure readouts are used to determine pressure drop.

ATTACHMENT G - Air Pollution Control Device Form

Control device ID number: C3A-M-1340	**List all emission units associated with this control device.** C3A-F-1410	
Manufacturer: Mikropul	**Model number:** 365-10-40 TRC	**Installation date:** 1986

Type of Air Pollution Control Device:

_X_ Baghouse/Fabric Filter	___ Venturi Scrubber	___ Multiclone
___ Carbon Bed Adsorber	___ Packed Tower Scrubber	___ Single Cyclone
___ Carbon Drum(s)	___ Other Wet Scrubber	___ Cyclone Bank
___ Catalytic Incinerator	___ Condenser	___ Settling Chamber
___ Thermal Incinerator	___ Flare	___ Other (describe) _____
___ Wet Plate Electrostatic Precipitator		___ Dry Plate Electrostatic Precipitator

List the pollutants for which this device is intended to control and the capture and control efficiencies.

Pollutant	Capture Efficiency	Control Efficiency
PM	99.9%	99.0%

Explain the characteristic design parameters of this control device (flow rates, pressure drops, number of bags, size, temperatures, etc.).
Baghouse uses polyester or equivalent cloth materials.

Is this device subject to the CAM requirements of 40 C.F.R. 64? ___ Yes _X_ No

If Yes, **Complete ATTACHMENT H**

If No**, Provide justification.** Existing Title V monitoring in place and PTE to device is less than 100 tpy.

Describe the parameters monitored and/or methods used to indicate performance of this control device.

Local pressure readouts are used to determine pressure drop.

ATTACHMENT G - Air Pollution Control Device Form

Control device ID number: C3A-M-2390	**List all emission units associated with this control device.** C3A-F-2460	
Manufacturer: Flex-Kleen	**Model number:** 96BXBC36 ARR UIG	**Installation date:** 1993

Type of Air Pollution Control Device:

_X_ Baghouse/Fabric Filter	___ Venturi Scrubber	___ Multiclone
___ Carbon Bed Adsorber	___ Packed Tower Scrubber	___ Single Cyclone
___ Carbon Drum(s)	___ Other Wet Scrubber	___ Cyclone Bank
___ Catalytic Incinerator	___ Condenser	___ Settling Chamber
___ Thermal Incinerator	___ Flare	___ Other (describe) _____
___ Wet Plate Electrostatic Precipitator		___ Dry Plate Electrostatic Precipitator

List the pollutants for which this device is intended to control and the capture and control efficiencies.

Pollutant	Capture Efficiency	Control Efficiency
PM	99.9%	99.0%

Explain the characteristic design parameters of this control device (flow rates, pressure drops, number of bags, size, temperatures, etc.).
Baghouse uses polyester or equivalent cloth materials.

Is this device subject to the CAM requirements of 40 C.F.R. 64? ___ Yes _X_ No

If Yes, **Complete ATTACHMENT H**

If No**, Provide justification.** Existing Title V monitoring in place and PTE to device is less than 100 tpy.

Describe the parameters monitored and/or methods used to indicate performance of this control device.

Local pressure readouts are used to determine pressure drop.

ATTACHMENT G - Air Pollution Control Device Form

Control device ID number: C3B-M-2420	**List all emission units associated with this control device.** C3B-E-2250	
Manufacturer: Flex-Kleen	**Model number:** 12010XTC180M152AZRZR	**Installation date:** 1993

Type of Air Pollution Control Device:

_X_ Baghouse/Fabric Filter	___ Venturi Scrubber	___ Multiclone
___ Carbon Bed Adsorber	___ Packed Tower Scrubber	___ Single Cyclone
___ Carbon Drum(s)	___ Other Wet Scrubber	___ Cyclone Bank
___ Catalytic Incinerator	___ Condenser	___ Settling Chamber
___ Thermal Incinerator	___ Flare	___ Other (describe) _____
___ Wet Plate Electrostatic Precipitator		___ Dry Plate Electrostatic Precipitator

List the pollutants for which this device is intended to control and the capture and control efficiencies.

Pollutant	Capture Efficiency	Control Efficiency
PM	99.9%	99.0%

Explain the characteristic design parameters of this control device (flow rates, pressure drops, number of bags, size, temperatures, etc.).
Baghouse uses polyester or equivalent cloth materials.

Is this device subject to the CAM requirements of 40 C.F.R. 64? ___ Yes _X_ No

If Yes, **Complete ATTACHMENT H**

If No**, Provide justification.** Existing Title V monitoring in place and PTE to device is less than 100 tpy.

Describe the parameters monitored and/or methods used to indicate performance of this control device.

Local pressure readouts are used to determine pressure drop.

ATTACHMENT G - Air Pollution Control Device Form

Control device ID number: C3B-M-1430	**List all emission units associated with this control device.** C3B-F-1420	
Manufacturer: Mikropul	**Model number:** 95-10-40 TRB	**Installation date:** 1992

Type of Air Pollution Control Device:

_X_ Baghouse/Fabric Filter	___ Venturi Scrubber	___ Multiclone
___ Carbon Bed Adsorber	___ Packed Tower Scrubber	___ Single Cyclone
___ Carbon Drum(s)	___ Other Wet Scrubber	___ Cyclone Bank
___ Catalytic Incinerator	___ Condenser	___ Settling Chamber
___ Thermal Incinerator	___ Flare	___ Other (describe) _____
___ Wet Plate Electrostatic Precipitator		___ Dry Plate Electrostatic Precipitator

List the pollutants for which this device is intended to control and the capture and control efficiencies.

Pollutant	Capture Efficiency	Control Efficiency
PM	99.9%	99.0%

Explain the characteristic design parameters of this control device (flow rates, pressure drops, number of bags, size, temperatures, etc.).
Baghouse uses polyester or equivalent cloth materials.

Is this device subject to the CAM requirements of 40 C.F.R. 64? ___ Yes _X_ No

If Yes, **Complete ATTACHMENT H**

If No**, Provide justification.** Existing Title V monitoring in place and PTE to device is less than 100 tpy.

Describe the parameters monitored and/or methods used to indicate performance of this control device.

Local pressure readouts are used to determine pressure drop.

ATTACHMENT G - Air Pollution Control Device Form

Control device ID number: C3D-M-0520	**List all emission units associated with this control device.** C3D-E-1280	
Manufacturer: Mikropul	**Model number:** 196-S-8 TRH	**Installation date:** 1992

Type of Air Pollution Control Device:

_X_ Baghouse/Fabric Filter	___ Venturi Scrubber	___ Multiclone
___ Carbon Bed Adsorber	___ Packed Tower Scrubber	___ Single Cyclone
___ Carbon Drum(s)	___ Other Wet Scrubber	___ Cyclone Bank
___ Catalytic Incinerator	___ Condenser	___ Settling Chamber
___ Thermal Incinerator	___ Flare	___ Other (describe) _____
___ Wet Plate Electrostatic Precipitator		___ Dry Plate Electrostatic Precipitator

List the pollutants for which this device is intended to control and the capture and control efficiencies.

Pollutant	Capture Efficiency	Control Efficiency
PM	99.9%	99.0%

Explain the characteristic design parameters of this control device (flow rates, pressure drops, number of bags, size, temperatures, etc.).
Baghouse uses polyester or equivalent cloth materials.

Is this device subject to the CAM requirements of 40 C.F.R. 64? ___ Yes _X_ No

If Yes, **Complete ATTACHMENT H**

If No**, Provide justification.** Existing Title V monitoring in place and PTE to device is less than 100 tpy.

Describe the parameters monitored and/or methods used to indicate performance of this control device.

Local pressure readouts are used to determine pressure drop.

ATTACHMENT G - Air Pollution Control Device Form

Control device ID number: L1A-M-1130	**List all emission units associated with this control device.** L1A-F-1090 & L1A-F-1100	
Manufacturer: Mikropul	**Model number:** 8B	**Installation date:** 1992

Type of Air Pollution Control Device:

_X_ Baghouse/Fabric Filter	___ Venturi Scrubber	___ Multiclone
___ Carbon Bed Adsorber	___ Packed Tower Scrubber	___ Single Cyclone
___ Carbon Drum(s)	___ Other Wet Scrubber	___ Cyclone Bank
___ Catalytic Incinerator	___ Condenser	___ Settling Chamber
___ Thermal Incinerator	___ Flare	___ Other (describe) _____
___ Wet Plate Electrostatic Precipitator		___ Dry Plate Electrostatic Precipitator

List the pollutants for which this device is intended to control and the capture and control efficiencies.

Pollutant	Capture Efficiency	Control Efficiency
PM	99.9%	99.0%

Explain the characteristic design parameters of this control device (flow rates, pressure drops, number of bags, size, temperatures, etc.).
Baghouse uses polyester or equivalent cloth materials.

Is this device subject to the CAM requirements of 40 C.F.R. 64? ___ Yes _X_ No

If Yes, **Complete ATTACHMENT H**

If No**, Provide justification.** Existing Title V monitoring in place and PTE to device is less than 100 tpy.

Describe the parameters monitored and/or methods used to indicate performance of this control device.

Local pressure readouts are used to determine pressure drop.

CSS-11

ATTACHMENT G - Air Pollution Control Device Form

Control device ID number: L3B-M-2060	**List all emission units associated with this control device.** L3B-F-2040	
Manufacturer: Mikropul	**Model number:** 8B	**Installation date:** 1992

Type of Air Pollution Control Device:

_X_ Baghouse/Fabric Filter ___ Venturi Scrubber ___ Multiclone

___ Carbon Bed Adsorber ___ Packed Tower Scrubber ___ Single Cyclone

___ Carbon Drum(s) ___ Other Wet Scrubber ___ Cyclone Bank

___ Catalytic Incinerator ___ Condenser ___ Settling Chamber

___ Thermal Incinerator ___ Flare ___ Other (describe) _____

___ Wet Plate Electrostatic Precipitator ___ Dry Plate Electrostatic Precipitator

List the pollutants for which this device is intended to control and the capture and control efficiencies.

Pollutant	Capture Efficiency	Control Efficiency
PM	99.9%	99.0%

Explain the characteristic design parameters of this control device (flow rates, pressure drops, number of bags, size, temperatures, etc.).
Baghouse uses polyester or equivalent cloth materials.

Is this device subject to the CAM requirements of 40 C.F.R. 64? ___ Yes _X_ No

If Yes, **Complete ATTACHMENT H**

If No**, Provide justification.** Existing Title V monitoring in place and PTE to device is less than 100 tpy.

Describe the parameters monitored and/or methods used to indicate performance of this control device.

Local pressure readouts are used to determine pressure drop.

ATTACHMENT G - Air Pollution Control Device Form

Control device ID number: C3E-M-5590	**List all emission units associated with this control device.** C3E-F-5440	
Manufacturer: Mikropul	**Model number:** 255-8-40 TRC	**Installation date:** 1992

Type of Air Pollution Control Device:

_X_ Baghouse/Fabric Filter	___ Venturi Scrubber	___ Multiclone
___ Carbon Bed Adsorber	___ Packed Tower Scrubber	___ Single Cyclone
___ Carbon Drum(s)	___ Other Wet Scrubber	___ Cyclone Bank
___ Catalytic Incinerator	___ Condenser	___ Settling Chamber
___ Thermal Incinerator	___ Flare	___ Other (describe) _____
___ Wet Plate Electrostatic Precipitator		___ Dry Plate Electrostatic Precipitator

List the pollutants for which this device is intended to control and the capture and control efficiencies.

Pollutant	Capture Efficiency	Control Efficiency
PM	99.9%	99.0%

Explain the characteristic design parameters of this control device (flow rates, pressure drops, number of bags, size, temperatures, etc.).
Baghouse uses polyester or equivalent cloth materials.

Is this device subject to the CAM requirements of 40 C.F.R. 64? ___ Yes _X_ No

If Yes, **Complete ATTACHMENT H**

If No**, Provide justification.** Existing Title V monitoring in place and PTE to device is less than 100 tpy.

Describe the parameters monitored and/or methods used to indicate performance of this control device.

Local pressure readouts are used to determine pressure drop.

ATTACHMENT G - Air Pollution Control Device Form

Control device ID number: C3A-M-7350	**List all emission units associated with this control device.** C3A-E-7240	
Manufacturer: Mikropul	**Model number:** 180R-10-40 TRC	**Installation date:** 1992

Type of Air Pollution Control Device:

_X_ Baghouse/Fabric Filter	___ Venturi Scrubber	___ Multiclone
___ Carbon Bed Adsorber	___ Packed Tower Scrubber	___ Single Cyclone
___ Carbon Drum(s)	___ Other Wet Scrubber	___ Cyclone Bank
___ Catalytic Incinerator	___ Condenser	___ Settling Chamber
___ Thermal Incinerator	___ Flare	___ Other (describe) _____
___ Wet Plate Electrostatic Precipitator		___ Dry Plate Electrostatic Precipitator

List the pollutants for which this device is intended to control and the capture and control efficiencies.

Pollutant	Capture Efficiency	Control Efficiency
PM	99.9%	99.0%

Explain the characteristic design parameters of this control device (flow rates, pressure drops, number of bags, size, temperatures, etc.).
Baghouse uses polyester or equivalent cloth materials.

Is this device subject to the CAM requirements of 40 C.F.R. 64? ___ Yes _X_ No

If Yes, **Complete ATTACHMENT H**

If No**, Provide justification.** Existing Title V monitoring in place and PTE to device is less than 100 tpy.

Describe the parameters monitored and/or methods used to indicate performance of this control device.

Local pressure readouts are used to determine pressure drop.

ATTACHMENT G - Air Pollution Control Device Form

Control device ID number: C3A-M-6390	**List all emission units associated with this control device.** C3A-F-5460	
Manufacturer: Mikropul	**Model number:** 95-10-40 TRB	**Installation date:** 1992

Type of Air Pollution Control Device:

_X_ Baghouse/Fabric Filter	___ Venturi Scrubber	___ Multiclone
___ Carbon Bed Adsorber	___ Packed Tower Scrubber	___ Single Cyclone
___ Carbon Drum(s)	___ Other Wet Scrubber	___ Cyclone Bank
___ Catalytic Incinerator	___ Condenser	___ Settling Chamber
___ Thermal Incinerator	___ Flare	___ Other (describe) _____
___ Wet Plate Electrostatic Precipitator		___ Dry Plate Electrostatic Precipitator

List the pollutants for which this device is intended to control and the capture and control efficiencies.

Pollutant	Capture Efficiency	Control Efficiency
PM	99.9%	99.0%

Explain the characteristic design parameters of this control device (flow rates, pressure drops, number of bags, size, temperatures, etc.).
Baghouse uses polyester or equivalent cloth materials.

Is this device subject to the CAM requirements of 40 C.F.R. 64? ___ Yes _X_ No

If Yes, **Complete ATTACHMENT H**

If No**, Provide justification.** Existing Title V monitoring in place and PTE to device is less than 100 tpy.

Describe the parameters monitored and/or methods used to indicate performance of this control device.

Local pressure readouts are used to determine pressure drop.

ATTACHMENT G - Air Pollution Control Device Form

Control device ID number: C3A-M-6340	**List all emission units associated with this control device.** C3A-F-5410	
Manufacturer: Mikropul	**Model number:** 365-10-40 TRC	**Installation date:** 1986

Type of Air Pollution Control Device:

_X_ Baghouse/Fabric Filter	___ Venturi Scrubber	___ Multiclone
___ Carbon Bed Adsorber	___ Packed Tower Scrubber	___ Single Cyclone
___ Carbon Drum(s)	___ Other Wet Scrubber	___ Cyclone Bank
___ Catalytic Incinerator	___ Condenser	___ Settling Chamber
___ Thermal Incinerator	___ Flare	___ Other (describe) _____
___ Wet Plate Electrostatic Precipitator		___ Dry Plate Electrostatic Precipitator

List the pollutants for which this device is intended to control and the capture and control efficiencies.

Pollutant	Capture Efficiency	Control Efficiency
PM	99.9%	99.0%

Explain the characteristic design parameters of this control device (flow rates, pressure drops, number of bags, size, temperatures, etc.).
Baghouse uses polyester or equivalent cloth materials.

Is this device subject to the CAM requirements of 40 C.F.R. 64? ___ Yes _X_ No

If Yes, **Complete ATTACHMENT H**

If No**, Provide justification.** Existing Title V monitoring in place and PTE to device is less than 100 tpy.

Describe the parameters monitored and/or methods used to indicate performance of this control device.

Local pressure readouts are used to determine pressure drop.

ATTACHMENT G - Air Pollution Control Device Form

Control device ID number: C3B-M-6420	**List all emission units associated with this control device.** C3B-E-6250	
Manufacturer: Mikropul	**Model number:** 1005-10-40 TRC	**Installation date:** 1992

Type of Air Pollution Control Device:

_X_ Baghouse/Fabric Filter	___ Venturi Scrubber	___ Multiclone
___ Carbon Bed Adsorber	___ Packed Tower Scrubber	___ Single Cyclone
___ Carbon Drum(s)	___ Other Wet Scrubber	___ Cyclone Bank
___ Catalytic Incinerator	___ Condenser	___ Settling Chamber
___ Thermal Incinerator	___ Flare	___ Other (describe) _____
___ Wet Plate Electrostatic Precipitator		___ Dry Plate Electrostatic Precipitator

List the pollutants for which this device is intended to control and the capture and control efficiencies.

Pollutant	Capture Efficiency	Control Efficiency
PM	99.9%	99.0%

Explain the characteristic design parameters of this control device (flow rates, pressure drops, number of bags, size, temperatures, etc.).
Baghouse uses polyester or equivalent cloth materials.

Is this device subject to the CAM requirements of 40 C.F.R. 64? ___ Yes _X_ No

If Yes, **Complete ATTACHMENT H**

If No**, Provide justification.** Existing Title V monitoring in place and PTE to device is less than 100 tpy.

Describe the parameters monitored and/or methods used to indicate performance of this control device.

Local pressure readouts are used to determine pressure drop.

ATTACHMENT G - Air Pollution Control Device Form

Control device ID number: C3B-M-5430	**List all emission units associated with this control device.** C3B-F-5420	
Manufacturer: Mikropul	**Model number:** 1005-10-40 TRC	**Installation date:** 1992

Type of Air Pollution Control Device:

_X_ Baghouse/Fabric Filter	___ Venturi Scrubber	___ Multiclone
___ Carbon Bed Adsorber	___ Packed Tower Scrubber	___ Single Cyclone
___ Carbon Drum(s)	___ Other Wet Scrubber	___ Cyclone Bank
___ Catalytic Incinerator	___ Condenser	___ Settling Chamber
___ Thermal Incinerator	___ Flare	___ Other (describe) _____
___ Wet Plate Electrostatic Precipitator		___ Dry Plate Electrostatic Precipitator

List the pollutants for which this device is intended to control and the capture and control efficiencies.

Pollutant	Capture Efficiency	Control Efficiency
PM	99.9%	99.0%

Explain the characteristic design parameters of this control device (flow rates, pressure drops, number of bags, size, temperatures, etc.).
Baghouse uses polyester or equivalent cloth materials.

Is this device subject to the CAM requirements of 40 C.F.R. 64? ___ Yes _X_ No

If Yes, **Complete ATTACHMENT H**

If No**, Provide justification.** Existing Title V monitoring in place and PTE to device is less than 100 tpy.

Describe the parameters monitored and/or methods used to indicate performance of this control device.

Local pressure readouts are used to determine pressure drop.

ATTACHMENT G - Air Pollution Control Device Form

Control device ID number: L1B-M-1160	**List all emission units associated with this control device.** L1B-F-2115 & L1B-F-2120	
Manufacturer: Mikropul	**Model number:** 8B	**Installation date:** 1986

Type of Air Pollution Control Device:

_X_ Baghouse/Fabric Filter	___ Venturi Scrubber	___ Multiclone
___ Carbon Bed Adsorber	___ Packed Tower Scrubber	___ Single Cyclone
___ Carbon Drum(s)	___ Other Wet Scrubber	___ Cyclone Bank
___ Catalytic Incinerator	___ Condenser	___ Settling Chamber
___ Thermal Incinerator	___ Flare	___ Other (describe) _____
___ Wet Plate Electrostatic Precipitator		___ Dry Plate Electrostatic Precipitator

List the pollutants for which this device is intended to control and the capture and control efficiencies.

Pollutant	Capture Efficiency	Control Efficiency
PM	99.9%	99.0%

Explain the characteristic design parameters of this control device (flow rates, pressure drops, number of bags, size, temperatures, etc.).
Baghouse uses polyester or equivalent cloth materials.

Is this device subject to the CAM requirements of 40 C.F.R. 64? ___ Yes _X_ No

If Yes, **Complete ATTACHMENT H**

If No**, Provide justification.** Existing Title V monitoring in place and PTE to device is less than 100 tpy.

Describe the parameters monitored and/or methods used to indicate performance of this control device.

Local pressure readouts are used to determine pressure drop.

CSS-12

ATTACHMENT G - Air Pollution Control Device Form

Control device ID number: L3B-M-2060	**List all emission units associated with this control device.** L3B-F-2040	
Manufacturer: Flex-Kleen	**Model number:** 12010XTC180M152AZRZR	**Installation date:** 1992

Type of Air Pollution Control Device:

_X_ Baghouse/Fabric Filter	___ Venturi Scrubber	___ Multiclone
___ Carbon Bed Adsorber	___ Packed Tower Scrubber	___ Single Cyclone
___ Carbon Drum(s)	___ Other Wet Scrubber	___ Cyclone Bank
___ Catalytic Incinerator	___ Condenser	___ Settling Chamber
___ Thermal Incinerator	___ Flare	___ Other (describe) _____
___ Wet Plate Electrostatic Precipitator		___ Dry Plate Electrostatic Precipitator

List the pollutants for which this device is intended to control and the capture and control efficiencies.

Pollutant	Capture Efficiency	Control Efficiency
PM	99.9%	99.0%

Explain the characteristic design parameters of this control device (flow rates, pressure drops, number of bags, size, temperatures, etc.).
Baghouse uses polyester or equivalent cloth materials.

Is this device subject to the CAM requirements of 40 C.F.R. 64? ___ Yes _X_ No

If Yes, **Complete ATTACHMENT H**

If No**, Provide justification.** Existing Title V monitoring in place and PTE to device is less than 100 tpy.

Describe the parameters monitored and/or methods used to indicate performance of this control device.

Local pressure readouts are used to determine pressure drop.

ATTACHMENT G - Air Pollution Control Device Form

Control device ID number: C4E-M-1590	**List all emission units associated with this control device.** C4E-F-1440	
Manufacturer: Mikropul	**Model number:** 255-8-40 TRC	**Installation date:** 1992

Type of Air Pollution Control Device:

_X_ Baghouse/Fabric Filter	___ Venturi Scrubber	___ Multiclone
___ Carbon Bed Adsorber	___ Packed Tower Scrubber	___ Single Cyclone
___ Carbon Drum(s)	___ Other Wet Scrubber	___ Cyclone Bank
___ Catalytic Incinerator	___ Condenser	___ Settling Chamber
___ Thermal Incinerator	___ Flare	___ Other (describe) _____
___ Wet Plate Electrostatic Precipitator		___ Dry Plate Electrostatic Precipitator

List the pollutants for which this device is intended to control and the capture and control efficiencies.

Pollutant	Capture Efficiency	Control Efficiency
PM	99.9%	99.0%

Explain the characteristic design parameters of this control device (flow rates, pressure drops, number of bags, size, temperatures, etc.).
Baghouse uses polyester or equivalent cloth materials.

Is this device subject to the CAM requirements of 40 C.F.R. 64? ___ Yes _X_ No

If Yes, **Complete ATTACHMENT H**

If No**, Provide justification.** Existing Title V monitoring in place and PTE to device is less than 100 tpy.

Describe the parameters monitored and/or methods used to indicate performance of this control device.

Local pressure readouts are used to determine pressure drop.

ATTACHMENT G - Air Pollution Control Device Form

Control device ID number: C4A-M-3350	**List all emission units associated with this control device.** C4A-E-3240	
Manufacturer: Flex-Kleen	**Model number:** 120WXTC34M276ARRIIIG	**Installation date:** 1993

Type of Air Pollution Control Device:

_X_ Baghouse/Fabric Filter	___ Venturi Scrubber	___ Multiclone
___ Carbon Bed Adsorber	___ Packed Tower Scrubber	___ Single Cyclone
___ Carbon Drum(s)	___ Other Wet Scrubber	___ Cyclone Bank
___ Catalytic Incinerator	___ Condenser	___ Settling Chamber
___ Thermal Incinerator	___ Flare	___ Other (describe) _____
___ Wet Plate Electrostatic Precipitator		___ Dry Plate Electrostatic Precipitator

List the pollutants for which this device is intended to control and the capture and control efficiencies.

Pollutant	Capture Efficiency	Control Efficiency
PM	99.9%	99.0%

Explain the characteristic design parameters of this control device (flow rates, pressure drops, number of bags, size, temperatures, etc.).
Baghouse uses polyester or equivalent cloth materials.

Is this device subject to the CAM requirements of 40 C.F.R. 64? ___ Yes _X_ No

If Yes, **Complete ATTACHMENT H**

If No**, Provide justification.** Existing Title V monitoring in place and PTE to device is less than 100 tpy.

Describe the parameters monitored and/or methods used to indicate performance of this control device.

Local pressure readouts are used to determine pressure drop.

ATTACHMENT G - Air Pollution Control Device Form

Control device ID number: C4A-M-2390	**List all emission units associated with this control device.** C4A-F-2460	
Manufacturer: Flex-Kleen	**Model number:** 96BXBC36 ARR UIG	**Installation date:** 1993

Type of Air Pollution Control Device:

_X_ Baghouse/Fabric Filter	___ Venturi Scrubber	___ Multiclone
___ Carbon Bed Adsorber	___ Packed Tower Scrubber	___ Single Cyclone
___ Carbon Drum(s)	___ Other Wet Scrubber	___ Cyclone Bank
___ Catalytic Incinerator	___ Condenser	___ Settling Chamber
___ Thermal Incinerator	___ Flare	___ Other (describe) _____
___ Wet Plate Electrostatic Precipitator		___ Dry Plate Electrostatic Precipitator

List the pollutants for which this device is intended to control and the capture and control efficiencies.

Pollutant	Capture Efficiency	Control Efficiency
PM	99.9%	99.0%

Explain the characteristic design parameters of this control device (flow rates, pressure drops, number of bags, size, temperatures, etc.).
Baghouse uses polyester or equivalent cloth materials.

Is this device subject to the CAM requirements of 40 C.F.R. 64? ___ Yes _X_ No

If Yes, **Complete ATTACHMENT H**

If No**, Provide justification.** Existing Title V monitoring in place and PTE to device is less than 100 tpy.

Describe the parameters monitored and/or methods used to indicate performance of this control device.

Local pressure readouts are used to determine pressure drop.

ATTACHMENT G - Air Pollution Control Device Form

Control device ID number: C4B-M-2420	**List all emission units associated with this control device.** C4B-E-2250	
Manufacturer: Flex-Kleen	**Model number:** 12010XTC180M152AZRZR	**Installation date:** 1993

Type of Air Pollution Control Device:

_X_ Baghouse/Fabric Filter	___ Venturi Scrubber	___ Multiclone
___ Carbon Bed Adsorber	___ Packed Tower Scrubber	___ Single Cyclone
___ Carbon Drum(s)	___ Other Wet Scrubber	___ Cyclone Bank
___ Catalytic Incinerator	___ Condenser	___ Settling Chamber
___ Thermal Incinerator	___ Flare	___ Other (describe) _____
___ Wet Plate Electrostatic Precipitator		___ Dry Plate Electrostatic Precipitator

List the pollutants for which this device is intended to control and the capture and control efficiencies.

Pollutant	Capture Efficiency	Control Efficiency
PM	99.9%	99.0%

Explain the characteristic design parameters of this control device (flow rates, pressure drops, number of bags, size, temperatures, etc.).
Baghouse uses polyester or equivalent cloth materials.

Is this device subject to the CAM requirements of 40 C.F.R. 64? ___ Yes _X_ No

If Yes, **Complete ATTACHMENT H**

If No**, Provide justification.** Existing Title V monitoring in place and PTE to device is less than 100 tpy.

Describe the parameters monitored and/or methods used to indicate performance of this control device.

Local pressure readouts are used to determine pressure drop.

ATTACHMENT G - Air Pollution Control Device Form

Control device ID number: C4B-M-1430	**List all emission units associated with this control device.** C4B-F-1420 & C4C-R-3070	
Manufacturer: Mikropul	**Model number:** 95-10-40 TRB	**Installation date:** 1992

Type of Air Pollution Control Device:

_X_ Baghouse/Fabric Filter	___ Venturi Scrubber	___ Multiclone
___ Carbon Bed Adsorber	___ Packed Tower Scrubber	___ Single Cyclone
___ Carbon Drum(s)	___ Other Wet Scrubber	___ Cyclone Bank
___ Catalytic Incinerator	___ Condenser	___ Settling Chamber
___ Thermal Incinerator	___ Flare	___ Other (describe) _____
___ Wet Plate Electrostatic Precipitator		___ Dry Plate Electrostatic Precipitator

List the pollutants for which this device is intended to control and the capture and control efficiencies.

Pollutant	Capture Efficiency	Control Efficiency
PM	99.9%	99.0%

Explain the characteristic design parameters of this control device (flow rates, pressure drops, number of bags, size, temperatures, etc.).
Baghouse uses polyester or equivalent cloth materials.

Is this device subject to the CAM requirements of 40 C.F.R. 64? ___ Yes _X_ No

If Yes, **Complete ATTACHMENT H**

If No**, Provide justification.** Existing Title V monitoring in place and PTE to device is less than 100 tpy.

Describe the parameters monitored and/or methods used to indicate performance of this control device.

Local pressure readouts are used to determine pressure drop.

ATTACHMENT G - Air Pollution Control Device Form

Control device ID number: C4D-M-0520	**List all emission units associated with this control device.** C4D-E-1280	
Manufacturer: Flex-Kleen	**Model number:** 966	**Installation date:** 1993

Type of Air Pollution Control Device:

_X_ Baghouse/Fabric Filter ___ Venturi Scrubber ___ Multiclone

___ Carbon Bed Adsorber ___ Packed Tower Scrubber ___ Single Cyclone

___ Carbon Drum(s) ___ Other Wet Scrubber ___ Cyclone Bank

___ Catalytic Incinerator ___ Condenser ___ Settling Chamber

___ Thermal Incinerator ___ Flare ___ Other (describe) _____

___ Wet Plate Electrostatic Precipitator ___ Dry Plate Electrostatic Precipitator

List the pollutants for which this device is intended to control and the capture and control efficiencies.

Pollutant	Capture Efficiency	Control Efficiency
PM	99.9%	99.0%

Explain the characteristic design parameters of this control device (flow rates, pressure drops, number of bags, size, temperatures, etc.).
Baghouse uses polyester or equivalent cloth materials.

Is this device subject to the CAM requirements of 40 C.F.R. 64? ___ Yes _X_ No

If Yes, **Complete ATTACHMENT H**

If No**, Provide justification.** Existing Title V monitoring in place and PTE to device is less than 100 tpy.

Describe the parameters monitored and/or methods used to indicate performance of this control device.

Local pressure readouts are used to determine pressure drop.

ATTACHMENT G - Air Pollution Control Device Form

Control device ID number: L1C-M-1130	**List all emission units associated with this control device.** L1C-F-1090	
Manufacturer: Flex-Kleen	**Model number:** 96BXTC36M34 ABB IIG	**Installation date:** 1993

Type of Air Pollution Control Device:

_X_ Baghouse/Fabric Filter	___ Venturi Scrubber	___ Multiclone
___ Carbon Bed Adsorber	___ Packed Tower Scrubber	___ Single Cyclone
___ Carbon Drum(s)	___ Other Wet Scrubber	___ Cyclone Bank
___ Catalytic Incinerator	___ Condenser	___ Settling Chamber
___ Thermal Incinerator	___ Flare	___ Other (describe) _____
___ Wet Plate Electrostatic Precipitator		___ Dry Plate Electrostatic Precipitator

List the pollutants for which this device is intended to control and the capture and control efficiencies.

Pollutant	Capture Efficiency	Control Efficiency
PM	99.9%	99.0%

Explain the characteristic design parameters of this control device (flow rates, pressure drops, number of bags, size, temperatures, etc.).
Baghouse uses polyester or equivalent cloth materials.

Is this device subject to the CAM requirements of 40 C.F.R. 64? ___ Yes _X_ No

If Yes, **Complete ATTACHMENT H**

If No**, Provide justification.** Existing Title V monitoring in place and PTE to device is less than 100 tpy.

Describe the parameters monitored and/or methods used to indicate performance of this control device.

Local pressure readouts are used to determine pressure drop.

ATTACHMENT G - Air Pollution Control Device Form

Control device ID number: L4C-M-0390	**List all emission units associated with this control device.** L4C-M-0210	
Manufacturer: Flex-Kleen	**Model number:** 120BXTR9 ARR IIG	**Installation date:** 1993

Type of Air Pollution Control Device:

_X_ Baghouse/Fabric Filter	___ Venturi Scrubber	___ Multiclone
___ Carbon Bed Adsorber	___ Packed Tower Scrubber	___ Single Cyclone
___ Carbon Drum(s)	___ Other Wet Scrubber	___ Cyclone Bank
___ Catalytic Incinerator	___ Condenser	___ Settling Chamber
___ Thermal Incinerator	___ Flare	___ Other (describe) _____
___ Wet Plate Electrostatic Precipitator		___ Dry Plate Electrostatic Precipitator

List the pollutants for which this device is intended to control and the capture and control efficiencies.

Pollutant	Capture Efficiency	Control Efficiency
PM	99.9%	99.0%

Explain the characteristic design parameters of this control device (flow rates, pressure drops, number of bags, size, temperatures, etc.).
Baghouse uses polyester or equivalent cloth materials.

Is this device subject to the CAM requirements of 40 C.F.R. 64? ___ Yes _X_ No

If Yes, **Complete ATTACHMENT H**

If No**, Provide justification.** Existing Title V monitoring in place and PTE to device is less than 100 tpy.

Describe the parameters monitored and/or methods used to indicate performance of this control device.

Local pressure readouts are used to determine pressure drop.

CSS-13

ATTACHMENT G - Air Pollution Control Device Form

Control device ID number: C4A-M-7350	**List all emission units associated with this control device.** C4A-E-7240	
Manufacturer: Flex-Kleen	**Model number:** 120WXTC34M276ARRIIIG	**Installation date:** 1993

Type of Air Pollution Control Device:

_X_ Baghouse/Fabric Filter	___ Venturi Scrubber	___ Multiclone
___ Carbon Bed Adsorber	___ Packed Tower Scrubber	___ Single Cyclone
___ Carbon Drum(s)	___ Other Wet Scrubber	___ Cyclone Bank
___ Catalytic Incinerator	___ Condenser	___ Settling Chamber
___ Thermal Incinerator	___ Flare	___ Other (describe) _____
___ Wet Plate Electrostatic Precipitator		___ Dry Plate Electrostatic Precipitator

List the pollutants for which this device is intended to control and the capture and control efficiencies.

Pollutant	Capture Efficiency	Control Efficiency
PM	99.9%	99.0%

Explain the characteristic design parameters of this control device (flow rates, pressure drops, number of bags, size, temperatures, etc.).
Baghouse uses polyester or equivalent cloth materials.

Is this device subject to the CAM requirements of 40 C.F.R. 64? ___ Yes _X_ No

If Yes, **Complete ATTACHMENT H**

If No**, Provide justification.** Existing Title V monitoring in place and PTE to device is less than 100 tpy.

Describe the parameters monitored and/or methods used to indicate performance of this control device.

Local pressure readouts are used to determine pressure drop.

ATTACHMENT G - Air Pollution Control Device Form

Control device ID number: C4E-M-5590	**List all emission units associated with this control device.** C4E-F-5440	
Manufacturer: Mikropul	**Model number:** 255-8-40 TRC	**Installation date:** 1992

Type of Air Pollution Control Device:

_X_ Baghouse/Fabric Filter	___ Venturi Scrubber	___ Multiclone
___ Carbon Bed Adsorber	___ Packed Tower Scrubber	___ Single Cyclone
___ Carbon Drum(s)	___ Other Wet Scrubber	___ Cyclone Bank
___ Catalytic Incinerator	___ Condenser	___ Settling Chamber
___ Thermal Incinerator	___ Flare	___ Other (describe) _____
___ Wet Plate Electrostatic Precipitator		___ Dry Plate Electrostatic Precipitator

List the pollutants for which this device is intended to control and the capture and control efficiencies.

Pollutant	Capture Efficiency	Control Efficiency
PM	99.9%	99.0%

Explain the characteristic design parameters of this control device (flow rates, pressure drops, number of bags, size, temperatures, etc.).
Baghouse uses polyester or equivalent cloth materials.

Is this device subject to the CAM requirements of 40 C.F.R. 64? ___ Yes _X_ No

If Yes, **Complete ATTACHMENT H**

If No**, Provide justification.** Existing Title V monitoring in place and PTE to device is less than 100 tpy.

Describe the parameters monitored and/or methods used to indicate performance of this control device.

Local pressure readouts are used to determine pressure drop.

ATTACHMENT G - Air Pollution Control Device Form

Control device ID number: C4A-M-6390	**List all emission units associated with this control device.** C4A-F-6460	
Manufacturer: Flex-Kleen	**Model number:** 96BXBC36 ARR UIG	**Installation date:** 1993

Type of Air Pollution Control Device:

_X_ Baghouse/Fabric Filter	___ Venturi Scrubber	___ Multiclone
___ Carbon Bed Adsorber	___ Packed Tower Scrubber	___ Single Cyclone
___ Carbon Drum(s)	___ Other Wet Scrubber	___ Cyclone Bank
___ Catalytic Incinerator	___ Condenser	___ Settling Chamber
___ Thermal Incinerator	___ Flare	___ Other (describe) _____
___ Wet Plate Electrostatic Precipitator		___ Dry Plate Electrostatic Precipitator

List the pollutants for which this device is intended to control and the capture and control efficiencies.

Pollutant	Capture Efficiency	Control Efficiency
PM	99.9%	99.0%

Explain the characteristic design parameters of this control device (flow rates, pressure drops, number of bags, size, temperatures, etc.).
Baghouse uses polyester or equivalent cloth materials.

Is this device subject to the CAM requirements of 40 C.F.R. 64? ___ Yes _X_ No

If Yes, **Complete ATTACHMENT H**

If No**, Provide justification.** Existing Title V monitoring in place and PTE to device is less than 100 tpy.

Describe the parameters monitored and/or methods used to indicate performance of this control device.

Local pressure readouts are used to determine pressure drop.

ATTACHMENT G - Air Pollution Control Device Form

Control device ID number: C4B-M-6420	**List all emission units associated with this control device.** C4B-E-6250	
Manufacturer: Flex-Kleen	**Model number:** 12010XTC180M152AZRZR	**Installation date:** 1993

Type of Air Pollution Control Device:

_X_ Baghouse/Fabric Filter ___ Venturi Scrubber ___ Multiclone

___ Carbon Bed Adsorber ___ Packed Tower Scrubber ___ Single Cyclone

___ Carbon Drum(s) ___ Other Wet Scrubber ___ Cyclone Bank

___ Catalytic Incinerator ___ Condenser ___ Settling Chamber

___ Thermal Incinerator ___ Flare ___ Other (describe) _____

___ Wet Plate Electrostatic Precipitator ___ Dry Plate Electrostatic Precipitator

List the pollutants for which this device is intended to control and the capture and control efficiencies.

Pollutant	Capture Efficiency	Control Efficiency
PM	99.9%	99.0%

Explain the characteristic design parameters of this control device (flow rates, pressure drops, number of bags, size, temperatures, etc.).
Baghouse uses polyester or equivalent cloth materials.

Is this device subject to the CAM requirements of 40 C.F.R. 64? ___ Yes _X_ No

If Yes, **Complete ATTACHMENT H**

If No**, Provide justification.** Existing Title V monitoring in place and PTE to device is less than 100 tpy.

Describe the parameters monitored and/or methods used to indicate performance of this control device.

Local pressure readouts are used to determine pressure drop.

ATTACHMENT G - Air Pollution Control Device Form

Control device ID number: C4B-M-5430	**List all emission units associated with this control device.** C4B-F-5420 & E-7070	
Manufacturer: Mikropul	**Model number:** 95-10-40 TRB	**Installation date:** 1992

Type of Air Pollution Control Device:

_X_ Baghouse/Fabric Filter	___ Venturi Scrubber	___ Multiclone
___ Carbon Bed Adsorber	___ Packed Tower Scrubber	___ Single Cyclone
___ Carbon Drum(s)	___ Other Wet Scrubber	___ Cyclone Bank
___ Catalytic Incinerator	___ Condenser	___ Settling Chamber
___ Thermal Incinerator	___ Flare	___ Other (describe) _____
___ Wet Plate Electrostatic Precipitator		___ Dry Plate Electrostatic Precipitator

List the pollutants for which this device is intended to control and the capture and control efficiencies.

Pollutant	Capture Efficiency	Control Efficiency
PM	99.9%	99.0%

Explain the characteristic design parameters of this control device (flow rates, pressure drops, number of bags, size, temperatures, etc.).
Baghouse uses polyester or equivalent cloth materials.

Is this device subject to the CAM requirements of 40 C.F.R. 64? ___ Yes _X_ No

If Yes, **Complete ATTACHMENT H**

If No**, Provide justification.** Existing Title V monitoring in place and PTE to device is less than 100 tpy.

Describe the parameters monitored and/or methods used to indicate performance of this control device.

Local pressure readouts are used to determine pressure drop.

ATTACHMENT G - Air Pollution Control Device Form

Control device ID number: L1C-M-1130	**List all emission units associated with this control device.** L1D-F-1110 & L1D-F-1120	
Manufacturer: Mikropul	**Model number:** 8B	**Installation date:** 1996

Type of Air Pollution Control Device:

_X_ Baghouse/Fabric Filter ___ Venturi Scrubber ___ Multiclone

___ Carbon Bed Adsorber ___ Packed Tower Scrubber ___ Single Cyclone

___ Carbon Drum(s) ___ Other Wet Scrubber ___ Cyclone Bank

___ Catalytic Incinerator ___ Condenser ___ Settling Chamber

___ Thermal Incinerator ___ Flare ___ Other (describe) _____

___ Wet Plate Electrostatic Precipitator ___ Dry Plate Electrostatic Precipitator

List the pollutants for which this device is intended to control and the capture and control efficiencies.

Pollutant	Capture Efficiency	Control Efficiency
PM	99.9%	99.0%

Explain the characteristic design parameters of this control device (flow rates, pressure drops, number of bags, size, temperatures, etc.).
Baghouse uses polyester or equivalent cloth materials.

Is this device subject to the CAM requirements of 40 C.F.R. 64? ___ Yes _X_ No

If Yes, **Complete ATTACHMENT H**

If No**, Provide justification.** Existing Title V monitoring in place and PTE to device is less than 100 tpy.

Describe the parameters monitored and/or methods used to indicate performance of this control device.

Local pressure readouts are used to determine pressure drop.

Miscellanous

ATTACHMENT G - Air Pollution Control Device Form

Control device ID number: MWB-F-1080	**List all emission units associated with this control device.** L26-F-6010	
Manufacturer: NA	**Model number:** NA	**Installation date:** 1959

Type of Air Pollution Control Device:

_X_ Baghouse/Fabric Filter	___ Venturi Scrubber	___ Multiclone
___ Carbon Bed Adsorber	___ Packed Tower Scrubber	___ Single Cyclone
___ Carbon Drum(s)	___ Other Wet Scrubber	___ Cyclone Bank
___ Catalytic Incinerator	___ Condenser	___ Settling Chamber
___ Thermal Incinerator	___ Flare	___ Other (describe) _____
___ Wet Plate Electrostatic Precipitator		___ Dry Plate Electrostatic Precipitator

List the pollutants for which this device is intended to control and the capture and control efficiencies.

Pollutant	Capture Efficiency	Control Efficiency
PM	99.9%	99.0%

Explain the characteristic design parameters of this control device (flow rates, pressure drops, number of bags, size, temperatures, etc.).
Baghouse uses polyester or equivalent cloth materials.

Is this device subject to the CAM requirements of 40 C.F.R. 64? ___ Yes _X_ No

If Yes, **Complete ATTACHMENT H**

If No**, Provide justification.** Existing Title V monitoring in place and PTE to device is less than 100 tpy.

Describe the parameters monitored and/or methods used to indicate performance of this control device.

Local pressure readouts are used to determine pressure drop.

Attachment H

Compliance Assurance Monitoring

ATTACHMENT H - Compliance Assurance Monitoring (CAM) Plan Form

For definitions and information about the CAM rule, please refer to 40 CFR Part 64. Additional information (including guidance documents) may also be found at http://www.epa.gov/ttn/emc/cam.html

CAM APPLICABILITY DETERMINATION

1) Does the facility have a PSEU (Pollutant-Specific Emissions Unit considered separately with respect to **EACH** regulated air pollutant) that is subject to CAM (40 CFR Part 64), which must be addressed in this CAM plan submittal? To determine applicability, a PSEU must meet **all** of the following criteria (*If No, then the remainder of this form need not be completed*): ☐ YES ☒ NO

a. The PSEU is located at a major source that is required to obtain a Title V permit;

b. The PSEU is subject to an emission limitation or standard for the applicable regulated air pollutant that is NOT exempt;

LIST OF EXEMPT EMISSION LIMITATIONS OR STANDARDS:

- NSPS (40 CFR Part 60) or NESHAP (40 CFR Parts 61 and 63) proposed after 11/15/1990.
- Stratospheric Ozone Protection Requirements.
- Acid Rain Program Requirements.
- Emission Limitations or Standards for which a WVDEP Division of Air Quality Title V permit specifies a continuous compliance determination method, as defined in 40 CFR §64.1.
- An emission cap that meets the requirements specified in 40 CFR §70.4(b)(12).

c. The PSEU uses an add-on control device (as defined in 40 CFR §64.1) to achieve compliance with an emission limitation or standard;

d. The PSEU has potential pre-control device emissions of the applicable regulated air pollutant that are equal to or greater than the Title V Major Source Threshold Levels; AND

e. The PSEU is NOT an exempt backup utility power emissions unit that is municipally-owned.

BASIS OF CAM SUBMITTAL

2) Mark the appropriate box below as to why this CAM plan is being submitted as part of an application for a Title V permit:

☐ RENEWAL APPLICATION. **ALL** PSEUs for which a CAM plan has NOT yet been approved need to be addressed in this CAM plan submittal.

☐ INITIAL APPLICATION (submitted after 4/20/98). **ONLY** large PSEUs (i. e., PSEUs with potential post-control device emissions of an applicable regulated air pollutant that are equal to or greater than Major Source Threshold Levels) need to be addressed in this CAM plan submittal.

☐ SIGNIFICANT MODIFICATION TO LARGE PSEUs. **ONLY** large PSEUs being modified after 4/20/98 need to be addressed in this cam plan submittal. For large PSEUs with an approved CAM plan, Only address the appropriate monitoring requirements affected by the significant modification.

3) [a] BACKGROUND DATA AND INFORMATION

Complete the following table for **all** PSEUs that need to be addressed in this CAM plan submittal. This section is to be used to provide background data and information for each PSEU In order to supplement the submittal requirements specified in 40 CFR §64.4. If additional space is needed, attach and label accordingly.

PSEU DESIGNATION	DESCRIPTION	POLLUTANT	CONTROL DEVICE	[b] EMISSION LIMITATION or STANDARD	[c] MONITORING REQUIREMENT
EXAMPLE Boiler No. 1	Wood-Fired Boiler	PM	Multiclone	45CSR§2-4.1.c.; 9.0 lb/hr	Monitor pressure drop across multiclone: Weekly inspection of multiclone

[a] If a control device is common to more than one PSEU, one monitoring plan may be submitted for the control device with the affected PSEUs identified and any conditions that must be maintained or monitored in accordance with 40 CFR §64.3(a). If a single PSEU is controlled by more than one control device similar in design and operation, one monitoring plan for the applicable control devices may be submitted with the applicable control devices identified and any conditions that must be maintained or monitored in accordance with 40 CFR §64.3(a).

[b] Indicate the emission limitation or standard for any applicable requirement that constitutes an emission limitation, emission standard, or standard of performance (as defined in 40 CFR §64.1).

[c] Indicate the monitoring requirements for the PSEU that are required by an applicable regulation or permit condition.

CAM MONITORING APPROACH CRITERIA			
Complete this section for **EACH** PSEU that needs to be addressed in this CAM plan submittal. This section may be copied as needed for each PSEU. This section is to be used to provide monitoring data and information for EACH indicator selected for EACH PSEU in order to meet the monitoring design criteria specified in 40 CFR §64.3 and §64.4. if more than two indicators are being selected for a PSEU or if additional space is needed, attach and label accordingly with the appropriate PSEU designation, pollutant, and indicator numbers.			
4a) PSEU Designation:	**4b) Pollutant:**	**4c) [a] Indicator No. 1:**	**4d) [a] Indicator No. 2:**
5a) GENERAL CRITERIA Describe the MONITORING APPROACH used to measure the indicators:			
[b] Establish the appropriate INDICATOR RANGE or the procedures for establishing the indicator range which provides a reasonable assurance of compliance:			
5b) PERFORMANCE CRITERIA Provide the SPECIFICATIONS FOR OBTAINING REPRESENTATIVE DATA, such as detector location, installation specifications, and minimum acceptable accuracy:			
[c] For new or modified monitoring equipment, provide VERIFICATION PROCEDURES, including manufacturer's recommendations, TO CONFIRM THE OPERATIONAL STATUS of the monitoring:			
Provide QUALITY ASSURANCE AND QUALITY CONTROL (QA/QC) PRACTICES that are adequate to ensure the continuing validity of the data, (i.e., daily calibrations, visual inspections, routine maintenance, RATA, etc.):			
[d] Provide the MONITORING FREQUENCY:			
Provide the DATA COLLECTION PROCEDURES that will be used:			
Provide the DATA AVERAGING PERIOD for the purpose of determining whether an excursion or exceedance has occurred:			

[a] Describe all indicators to be monitored which satisfies 40 CFR §64.3(a). Indicators of emission control performance for the control device and associated capture system may include measured or predicted emissions (including visible emissions or opacity), process and control device operating parameters that affect control device (and capture system) efficiency or emission rates, or recorded findings of inspection and maintenance activities.

[b] Indicator Ranges may be based on a single maximum or minimum value or at multiple levels that are relevant to distinctly different operating conditions, expressed as a function of process variables, expressed as maintaining the applicable indicator in a particular operational status or designated condition, or established as interdependent between more than one indicator. For CEMS, COMS, or PEMS, include the most recent certification test for the monitor.

[c] The verification for operational status should include procedures for installation, calibration, and operation of the monitoring equipment, conducted in accordance with the manufacturer's recommendations, necessary to confirm the monitoring equipment is operational prior to the commencement of the required monitoring.

[d] Emission units with post-control PTE ≥ 100 percent of the amount classifying the source as a major source (i.e., Large PSEU) must collect four or more values per hour to be averaged. A reduced data collection frequency may be approved in limited circumstances. Other emission units must collect data at least once per 24 hour period.

RATIONALE AND JUSTIFICATION

Complete this section for **EACH** PSEU that needs to be addressed in this CAM plan submittal. This section may be copied as needed for each PSEU. This section is to be used to provide rationale and justification for the selection of EACH indicator and monitoring approach and EACH indicator range in order to meet the submittal requirements specified in 40 CFR §64.4.

6a) PSEU Designation:	6b) Regulated Air Pollutant:

7) **INDICATORS AND THE MONITORING APPROACH**: Provide the rationale and justification for the selection of the indicators and the monitoring approach used to measure the indicators. Also provide any data supporting the rationale and justification. Explain the reasons for any differences between the verification of operational status or the quality assurance and control practices proposed, and the manufacturer's recommendations. (If additional space is needed, attach and label accordingly with the appropriate PSEU designation and pollutant):

8) **INDICATOR RANGES**: Provide the rationale and justification for the selection of the indicator ranges. The rationale and justification shall indicate how **EACH** indicator range was selected by either a COMPLIANCE OR PERFORMANCE TEST, a TEST PLAN AND SCHEDULE, or by ENGINEERING ASSESSMENTS. Depending on which method is being used for each indicator range, include the specific information required below for that specific indicator range. (If additional space is needed, attach and label accordingly with the appropriate PSEU designation and pollutant):

- COMPLIANCE OR PERFORMANCE TEST (Indicator ranges determined from control device operating parameter data obtained during a compliance or performance test conducted under regulatory specified conditions or under conditions representative of maximum potential emissions under anticipated operating conditions. Such data may be supplemented by engineering assessments and manufacturer's recommendations). The rationale and justification shall INCLUDE a summary of the compliance or performance test results that were used to determine the indicator range, and documentation indicating that no changes have taken place that could result in a significant change in the control system performance or the selected indicator ranges since the compliance or performance test was conducted.

- TEST PLAN AND SCHEDULE (Indicator ranges will be determined from a proposed implementation plan and schedule for installing, testing, and performing any other appropriate activities prior to use of the monitoring). The rationale and justification shall INCLUDE the proposed implementation plan and schedule that will provide for use of the monitoring as expeditiously as practicable after approval of this CAM plan, except that in no case shall the schedule for completing installation and beginning operation of the monitoring exceed 180 days after approval.

- ENGINEERING ASSESSMENTS (Indicator Ranges or the procedures for establishing indicator ranges are determined from engineering assessments and other data, such as manufacturers' design criteria and historical monitoring data, because factors specific to the type of monitoring, control device, or PSEU make compliance or performance testing unnecessary). The rationale and justification shall INCLUDE documentation demonstrating that compliance testing is not required to establish the indicator range.

RATIONALE AND JUSTIFICATION:

See each control device sheet in Attachment G. In general, control equipment currently have emission limits and monitoring requirements dictated by the Title V permit. Emission rates to most of these control devices are less than 100 tpy. Hot Oil Heaters used as control devices are regulated under 40CFR63 Subpart JJJ (PET MACT) and/or Subpart FFFF (MON MACT).