Dominion Resources Services, Inc.
5000 Dominion Boulevard, Glen Allen, VA 23060
Web Address: www.dom.com

March 12, 2010

Mr. John Benedict
West Virginia Department of Environmental Protection
Division of Air Quality
601 57th Street, SE
Charleston, West Virginia 25304

Re: ***Mt. Storm Power Station, Title V Permit Renewal Application***
Facility ID: 03-54-023-00003

Dear Mr. Benedict:

Dominion is providing three copies (two electronic copies and one paper copy) plus the original of the Title V Permit Renewal Application (with appropriate attachments) for our Mt. Storm Power Station located on State Route 93 two miles west of Bismarck in Mt. Storm, WV.

We believe the provided information is sufficient to deem the application administratively complete and begin the technical review process. However, should you have any questions concerning this submittal please contact Liz Willoughby at (804) 273-3740, (Elizabeth.A.Willoughby@dom.com).

Sincerely,

Cathy C. Taylor
Director, Electric Environmental Services

cc: **(CERTIFIED MAIL)**

Director, Air Enforcement Division
Office of Enforcement and Compliance Assurance
U.S. Environmental Protection Agency
Ariel Rios Building (2242A)
1200 Pennsylvania Avenue, N.W.
Washington, D.C. 20460

Regional Administrator
U.S. EPA Region III
1650 Arch Street
Philadelphia, PA 19106

Director
Virginia Department of Environmental Quality
629 East Main Street
P.O. Box 10009
Richmond, VA 23240-0009

Director, Division of Air Quality
Department of Environmental Protection
601 57th Street
Charleston, WV 25304

Bureau Chief
Environmental Protection Bureau
New York Attorney General's Office
120 Broadway
New York, New York 10271

Administrator
Air and Environmental Quality Compliance and Enforcement
P.O. Box 422
401 East State Street, Floor 4
Trenton, NJ 08625

Section Chief
Environmental Enforcement
Division of Law
P.O. Box 093
25 Market Street, 7th Floor
Trenton, NJ 08625

Department Head
Environmental Protection Department Connecticut Attorney General's Office
55 Elm Street
Hartford, CT 06106

Dominion Energy
Vice President- Fossil and Hydro
5000 Dominion Boulevard
Glen Allen, VA 23060

Chief Environmental Enforcement Section
U.S. Department of Justice
P.O. Box 7611, Ben Franklin Station
Washington, D.C. 20044-7611

TITLE V PERMIT RENEWAL APPLICATION
Mt. Storm Power Station
R30-02300003-2005

Table of Contents

Binder 1

Section	Title
1	Title V Permit Application
2	Facility Area Map.....Attachment A
3	Facility Plot Plan.....Attachment B
4	Emission Units Tables.....Attachment D
5	Emission Unit Forms.....Attachment E

TITLE V PERMIT RENEWAL APPLICATION
Mt. Storm Power Station
R30-02300003-2005

Table of Contents

Binder 2 of 3:

Section	Title	
6	Air Pollution Control Device Forms.....	Attachment G
7	Compliance Assurance Monitoring Plan Forms.....	Attachment H
8	Emission Calculations.....	Attachment I

TITLE V PERMIT RENEWAL APPLICATION
Mt. Storm Power Station
R30-02300003-2005

Binder 3 of 3:

Process Flow Diagrams.....Attachment C

- Boiler Air System – Unit 1
- Boiler Air System – Unit 1
- Boiler Air System – Unit 2
- Boiler Air System – Unit 2
- Boiler Air System – Unit 3
- Cooling Tower Unit 1 Component Cooling System
- Cooling Tower Unit 2 Component Cooling System
- Cooling Tower Unit 3 Component Cooling System
- Ash Handling Unit 1
- Ash Handling Unit 2
- Ash Handling Unit 3
- Station Auxiliary Boiler System
- FGD System – general arrangement
- Coal Handling
- Limestone Handling
- Sample System
- Pyrites
- Fire Protection – Main & Auxiliary Fire Pump house System
- Ammonia Tanks
- Acid Tank
- No. 2 Fuel oil Tanks
- Lime Storage Tank
- Miscellaneous Tanks
- Plant Roads

TITLE V PERMIT APPLICATION- GENERAL FORMS

WEST VIRGINIA DEPARTMENT OF ENVIRONMENTAL PROTECTION
DIVISION OF AIR QUALITY
601 57th Street SE
Charleston, WV 25304
Phone: (304) 926-0475
www.wvdep.org/daq

TITLE V PERMIT APPLICATION - GENERAL FORMS

Section 1: General Information

1. **Name of Applicant (As registered with the WV Secretary of State's Office):** Virginia Electric and Power Company	**2. Facility Name or Location:** Mt. Storm Power Station
3. DAQ Plant ID No.: 03-54-023-00003	**4. Federal Employer ID No. (FEIN)** 54-0418825

5. **Permit Application Type:**

☐ Initial Permit — When did operations commence? Unit 1: September 1965, Unit 2: July 1966, Unit 3: December 1973

☒ Permit Renewal — What is the expiration date of the existing permit? 10/19/2010

☐ Update to Initial Permit Application

6. Type of Business Entity:

☒ Corporation ☐ Governmental Agency
☐ Partnership ☐ Limited Partnership

7. Is the Applicant the:

☐ Owner ☐ Operator ☒ Both

If the Applicant is not both the owner and operator, please provide the name and address of the other party.

8. Number of onsite employees: 276

9. Governmental Code:

☒ Privately owned and operated; 0
☐ Federally owned and operated; 1
☐ State government owned and operated; 2
☐ County government owned and operated; 3
☐ Municipality government owned and operated; 4
☐ District government owned and operated; 5

10. Business Confidentiality Claims

Does this application include confidential information (per 45CSR31)? ☐ Yes ☒ No

If yes, identify each segment of information on each page that is submitted as confidential, and provide justification for each segment claimed confidential, including the criteria under 45CSR§31-4.1, and in accordance with the DAQ's *"PRECAUTIONARY NOTICE-CLAIMS OF CONFIDENTIALITY"* guidance.

11. Mailing Address

Street or P.O. Box:
c/o Cathy Taylor
5000 Dominion Boulevard
Glen Allen, VA 23060

City: Glen Allen	**State:** VA	**Zip:** 23060-3308
Telephone Number: (804) 273-2929	**Fax Number:** (804) 273-3410	

12. Facility Location

Street: HC #76, Box 430	**City:** Mt. Storm	**County:** Grant County
UTM Easting: 649.85 km	**UTM Northing:** 4340.00 km	**Zone:** ☒ 17 or ☐ 18

Directions: State Route 93, two (2) miles west of Bismark. From the intersection of Route 93 into Davis, WV continue east on Route 93 for approximately 8 miles turn in to Mt. Storm Power Station's main entrance

Portable Source? ☐ Yes ☒ No

Is facility located within a nonattainment area? ☐ Yes ☒ No	**If yes, for what air pollutants?** N/A
Is facility located within 50 miles of another state? ☒ Yes ☐ No	**If yes, name the affected state(s).** Maryland Pennsylvania Virginia
Is facility located within 100 km of a Class I Area[1]? ☒ Yes ☐ No **If no, do emissions impact a Class I Area[1]?** ☐ Yes ☒ No	**If yes, name the area(s).** Dolly Sods Otter Creek Wilderness

[1] *Class I areas include Dolly Sods and Otter Creek Wilderness Areas in West Virginia, and Shenandoah National Park and James River Face Wilderness Area in Virginia.*

13. Contact Information		
Responsible Official: Roger Shears		**Title:** Station Director, Fossil & Hydro
Street or P.O. Box: HC #76 Box 430		
City: Mt Storm	**State:** WV	**Zip:** 26739-9711
Telephone Number: (304) 259-4024	**Fax Number:** (304) 259-4011	
E-mail address: Roger.Shears@dom.com		
Environmental Contact: Kristin Edwards		**Title:** Supervisor, Environmental
Street or P.O. Box: HC #76 Box 430		
City: Mt. Storm	**State:** WV	**Zip:** 26739-9711
Telephone Number: (304) 259-4402	**Fax Number:** (304) 259-4011	
E-mail address: Kristin.D.Edwards@dom.com		
Application Preparer: Elizabeth Willoughby		**Title:** Environmental Specialist
Company: Dominion		
Street or P.O. Box: 5000 Dominion Boulevard		
City: Glen Allen	**State:** VA	**Zip:** 23060
Telephone Number: (804) 273-3740	**Fax Number:** (804) 273-2964	
E-mail address: Elizabeth.A.Willoughby@dom.com		

14. Facility Description

List all processes, products, NAICS and SIC codes for normal operation, in order of priority. Also list any process, products, NAICS and SIC codes associated with any alternative operating scenarios if different from those listed for normal operation.

Process	Products	NAICS	SIC
Coal fired electric generation facility	Electricity	221112	4911

Provide a general description of operations.

Dominion's Virginia Electric and Power Company Mt. Storm Power Station is a coal-fired electric generation facility and operates under SIC code 4911 and NAICS code 22112. The facility consists of three (3) coal-fired boilers, two with a rated design capacity of 5,779 mmBtu/hr and one with a rated design capacity of 5,824 mmBtu/hr, an oil-fired auxiliary boiler with a rated design capacity of 150 mmBtu/hr, and various supporting operations such as coal handling, ash handling, limestone handling, and various tanks with insignificant emissions. The Mt. Storm Power Station has the potential to operate seven (7) days per week, twenty-four (24) hours per day and fifty-two (52) weeks per year.

15. Provide an **Area Map** showing plant location as **ATTACHMENT A.**

16. Provide a **Plot Plan(s)**, e.g. scaled map(s) and/or sketch(es) showing the location of the property on which the stationary source(s) is located as **ATTACHMENT B.** For instructions, refer to "Plot Plan - Guidelines."

17. Provide a detailed **Process Flow Diagram(s)** showing each process or emissions unit as **ATTACHMENT C.** Process Flow Diagrams should show all emission units, control equipment, emission points, and their relationships.

18. Applicable Requirements Summary	
Instructions: Mark all applicable requirements.	
☒ SIP	☐ FIP
☒ Minor source NSR (45CSR13)	☒ PSD (45CSR14)
☒ NESHAP (45CSR15)	☐ Nonattainment NSR (45CSR19)
☒ Section 111 NSPS	☒ Section 112(d) MACT standards
☐ Section 112(g) Case-by-case MACT	☒ 112(r) RMP
☒ Section 112(i) Early reduction of HAP	☐ Consumer/commercial prod. reqts., section 183(e)
☐ Section 129 Standards/Reqts.	☒ Stratospheric ozone (Title VI)
☐ Tank vessel reqt., section 183(f)	☐ Emissions cap 45CSR§30-2.6.1
☐ NAAQS, increments or visibility (temp. sources)	☐ 45CSR27 State enforceable only rule
☒ 45CSR4 State enforceable only rule	☒ Acid Rain (Title IV, 45CSR33)
☐ Emissions Trading and Banking (45CSR28)	☒ Compliance Assurance Monitoring (40CFR64)
☐ NO_x Budget Trading Program Non-EGUs (45CSR1)	☐ NO_x Budget Trading Program EGUs (45CSR26)

19. Non Applicability Determinations

List all requirements which the source has determined not applicable and for which a permit shield is requested. The listing shall also include the rule citation and the reason why the shield applies.

The following requirements specifically identified are not applicable to the source based on the determinations set forth below. The permit shield shall apply to the following requirements provided the conditions of the determinations are met.

40 CFR 60 Subpart D 40 CFR 60 Subpart Da	**The Steam Generators potentially subject to these rules commenced construction prior to August 17, 1971**
40 CFR 60 Subpart Db	**The Steam Generator potentially subject to this rule commenced construction prior to June 19, 1984**
40 CFR 60 Subpart Dc	**This facility does not have Steam Generators less than 100 mmBtu/hr heat input but greater than 10 mmBtu/hr heat input.**
40 CFR 60 Subpart K	**The facility does not include storage vessels that are used to store petroleum liquids (as defined in 40 CFR 60.111(b)) which construction, reconstruction, or modification commenced after June 11, 1973 and prior to May 19, 1978.**
40 CFR 60 Subpart Ka	**The facility does not include storage vessels that are used to store petroleum liquids (as defined in 40 CFR 60.111a(b)) which construction, reconstruction, or modification commenced after May 18, 1978 and prior to July 23, 1984.**
40 CFR 60 Subpart Kb	**Storage vessels potentially affected by this subpart have a storage capacity of less than 75 cubic meters and therefore are not subject to this subpart.**
40 CFR 60 Subpart GG	**The Combustion Turbine potentially subject to this rule commenced construction prior to October 3, 1977 and combusts Jet Fuel Oil.**
40 CFR 82 Subpart B	The facility does not conduct motor vehicle maintenance involving CFCs on site.

- (Note this section is copied from Condition 3.7.2 of the Current Title V permit)

☒ Permit Shield

20. Facility-Wide Applicable Requirements

Note: Facility-wide applicable requirements (FWAR) are listed in Table 20A.

For all facility-wide applicable requirements listed above, provide monitoring/testing / recordkeeping / reporting which shall be used to demonstrate compliance. If the method is based on a permit or rule, include the condition number and/or citation. (Note: Each requirement listed above must have an associated method of demonstrating compliance. If there is not already a required method in place, then a method must be proposed.)

(Facility-wide applicable requirements (FWAR) are listed in Table 20A)

Facility-wide monitoring / testing / recordkeeping / reporting requirements are listed below by number. The numbers are linked to detailed information contained in Table 20B. Monitoring / testing / recordkeeping / reporting requirements are also referenced for each applicable requirement from the last column of Table 20A (applicable requirements)

FWTRR-1
FWTRR-2
FWTRR-3
FWTRR-4
FWTRR-5
FWTRR-6
FWTRR-7
FWTRR-8
FWTRR-9
FWTRR-10
FWTRR-11
FWTRR-12
FWTRR-13
FWTRR-14
FWTRR-15
FWTRR-16
FWTRR-17
FWTRR-18
FWTRR-19
FWTRR-20
FWTRR-21
FWTRR-22
FWTRR-23
FWTRR-24
FWTRR-25
FWTRR-26
FWTRR-27
FWTRR-28
FWTRR-29
FWTRR-30
FWTRR-31
FWTRR-32
FWTRR-33
FWTRR-34
FWTRR-35

Are you in compliance with all facility-wide applicable requirements? ☒ Yes ☐ No

If no, complete the **Schedule of Compliance Form** as **ATTACHMENT F**.

20A. Facility-Wide Applicable Requirements

List all facility-wide applicable requirements. For each applicable requirement, include the rule citation and/or permit with the condition number.

Link From General Form, Item 20	Applicable Requirement Citation	Permit Condition Number from Permit R30-02300014-2005	Requirement Summary	Monitoring / Testing / Recordkeeping / Reporting Requirement Links
FWAR-1	45CSR§6-3.1	3.1.1	**Open burning.** The open burning of refuse by any person, firm, corporation, association or public agency is prohibited except as noted in 45CSR§6-3.1.	None Required
FWAR-2	45CSR§6-3.2	3.1.2	**Open burning exemptions.** The exemptions listed in 45CSR§6-3.1 are subject to the following stipulation: Upon notification by the Secretary, no person shall cause, suffer, allow or permit any form of open burning during existing or predicted periods of atmospheric stagnation. Notification shall be made by such means as the Secretary may deem necessary and feasible.	None Required
FWAR-3	40 C.F.R. 61 and 45CSR15	3.1.3	**Asbestos.** The permittee is responsible for thoroughly inspecting the facility, or part of the facility, prior to commencement of demolition or renovation for the presence of asbestos and complying with 40 C.F.R. § 61.145, 40 C.F.R. § 61.148, and 40 C.F.R. § 61.150. The permittee must notify the Secretary at least ten (10) working days prior to the commencement of any asbestos removal on the forms prescribed by the Secretary if the permittee is subject to the notification requirements of 40 C.F.R. § 61.145(b)(3)(i). A copy of this notice is required to be sent to the USEPA, the Division of Waste Management and the Bureau for Public Health - Environmental Health.	FWTRR-8
FWAR-4	45CSR§4-3.1 State-Enforceable only	3.1.4	**Odor.** No person shall cause, suffer, allow or permit the discharge of air pollutants which cause or contribute to an objectionable odor at any location occupied by the public.	FWTRR-4
FWAR-5	45CSR§11-5.2	3.1.5	**Standby plan for reducing emissions.** When requested by the Secretary, the permittee shall prepare standby plans for reducing the emissions of air pollutants in accordance with the objectives set forth in Tables I, II, and III of 45CSR11.	FWTRR-6 FWTRR-8

20A. Facility-Wide Applicable Requirements

List all facility-wide applicable requirements. For each applicable requirement, include the rule citation and/or permit with the condition number.

Link From General Form, Item 20	Applicable Requirement Citation	Permit Condition Number from Permit R30-02300014-2005	Requirement Summary	Monitoring / Testing / Recordkeeping / Reporting Requirement Links
FWAR-6	W.Va. Code § 22-5-4(a)(14)	3.1.6	**Emission inventory.** The permittee is responsible for submitting, on an annual basis, an emission inventory in accordance with the submittal requirements of the Division of Air Quality.	FWTRR-3 FWTRR-6 FWTRR-8 FWTRR-9 FWTRR-10
FWAR-7	40 C.F.R. 82 Subpart F	3.1.7	**Ozone-depleting substances.** For those facilities performing maintenance, service, repair or disposal of appliances, comply with the standards for recycling and emissions reduction pursuant to 40 C.F.R. Part 82, Subpart F, except as provided for Motor Vehicle Air Conditioners (MVACs) in Subpart B: **a.** Persons opening appliances for maintenance, service, repair, or disposal must comply with the prohibitions and required practices pursuant to 40 C.F.R. §§ 82.154 and 82.156. **b.** Equipment used during the maintenance, service, repair, or disposal of appliances must comply with the standards for recycling and recovery equipment pursuant to 40 C.F.R. § 82.158. **c.** Persons performing maintenance, service, repair, or disposal of appliances must be certified by an approved technician certification program pursuant to 40 C.F.R. § 82.161.	FWTRR-3
FWAR-8	40 C.F.R. 68	3.1.8	**Risk Management Plan.** Should this stationary source, as defined in 40 CFR Part 68.3, become subject to Part 68, a risk management plan (RMP) must be submitted by the date specified in 40 CFR Part 68.10 and shall certify compliance with the requirements of Part 68 as part of the annual compliance certification as required by 40 C.F.R. Part 70 or 71.	FWTRR-6, FWTRR-8

20A. Facility-Wide Applicable Requirements

List all facility-wide applicable requirements. For each applicable requirement, include the rule citation and/or permit with the condition number.

Link From General Form, Item 20	Applicable Requirement Citation	Permit Condition Number from Permit R30-02300014-2005	Requirement Summary	Monitoring / Testing / Recordkeeping / Reporting Requirement Links
FWAR-9	45CSR§2-5., 45 CSR13, §4.1.6	3.1.10	**Fugitive Particulate Matter Control.** No person shall cause, suffer, allow, or permit any source of fugitive particulate matter to operate that is not equipped with a fugitive particulate matter control system. This system shall be operated and maintained in such a manner as to minimize the emission of fugitive particulate matter. Sources of fugitive particulate matter associated with fuel burning units shall include, but not be limited to, the following: **a.** Stockpiling of ash or fuel either in the open or in enclosures such as silos; **b.** Transport of ash in vehicles or on conveying systems, to include spillage, tracking, or blowing of particulate matter from or by such vehicles or equipment; and **c.** Ash or fuel handling systems and ash disposal areas.	FWTRR-5
FWAR-10	45CSR§§37-6.1.b and 20.1. State-Enforceable only,	3.1.11	**CAMR Mercury Budget Trading Program.** 45 CSR 37 has been repealed, therefore, it is no longer applicable to the source and should be removed	FWTRR-14
FWAR-11	45CSR§§39-6.1.b and 20.1., 45CSR§39-23.2., 45CSR§39-24.1	3.1.12	**CAIR NO_x Annual Trading Program.** The permittee shall comply with the standard requirements set forth in the attached CAIR Permit Application (see Appendix D) and the CAIR permit requirements set forth in 45CSR39 for each CAIR NO_x Annual source. The complete CAIR Permit Application shall be the CAIR Permit portion of the Title V permit administered in accordance with 45CSR30. a. The CAIR Permit portion of this permit is deemed to incorporate automatically the definitions of terms under 45CSR§39-2 and, upon recordation by the Administrator under sections 51 through 57, or 60 through 62 of 45CSR39, every allocation, transfer, or deduction of a CAIR NO_x Annual allowance to or from the compliance account of the CAIR NO_x Annual source covered by the permit. b. Except as provided in 45CSR§39-23.2, the Secretary will revise the CAIR Permit portion of this permit, as necessary, in accordance with the operating permit revision requirements set forth in 45CSR30.	FWTRR-6 FWTRR-8 FWTRR-10 FWTRR-11

20A. Facility-Wide Applicable Requirements

List all facility-wide applicable requirements. For each applicable requirement, include the rule citation and/or permit with the condition number.

Link From General Form, Item 20	Applicable Requirement Citation	Permit Condition Number from Permit R30-02300014-2005	Requirement Summary	Monitoring / Testing / Recordkeeping / Reporting Requirement Links
FWAR-12	45CSR§§40-6.1.b and 20.1, 45CSR§40-23.2., 45CSR§40-24.1.	3.1.13	**CAIR NO_x Ozone Season Trading Program.** The permittee shall comply with the standard requirements set forth in the attached CAIR Permit Application (see Appendix D) and the CAIR permit requirements set forth in 45CSR40 for each CAIR NO_x Ozone Season source. The complete CAIR Permit Application shall be the CAIR Permit portion of the Title V permit administered in accordance with 45CSR30. a. The CAIR Permit portion of this permit is deemed to incorporate automatically the definitions of terms under 45CSR§40-2 and, upon recordation by the Administrator under 45CSR§40-43.3.c, sections 51 through 57, or 60 through 62 of 45CSR40, every allocation, transfer, or deduction of a CAIR NO_x Ozone Season allowance to or from the compliance account of the CAIR NO_x Ozone Season source covered by the permit. b. Except as provided in 45CSR§40-23.2, the Secretary will revise the CAIR Permit portion of this permit, as necessary, in accordance with the operating permit revision requirements set forth in 45CSR30.	FWTRR-6 FWTRR-8 FWTRR-10 FWTRR-11

20A. Facility-Wide Applicable Requirements

List all facility-wide applicable requirements. For each applicable requirement, include the rule citation and/or permit with the condition number.

Link From General Form, Item 20	Applicable Requirement Citation	Permit Condition Number from Permit R30-02300014-2005	Requirement Summary	Monitoring / Testing / Recordkeeping / Reporting Requirement Links
FWAR-13	45CSR§§41-6.1.b. and 20.1., 45CSR§41-23.2., 45CSR§41-24.1	3.1.14	**CAIR SO_2Trading Program.** The permittee shall comply with the standard requirements set forth in the attached CAIR Permit Application (see Appendix D) and the CAIR permit requirements set forth in 45CSR41 for each CAIR SO_2 source. The complete CAIR Permit Application shall be the CAIR Permit portion of the Title V permit administered in accordance with 45CSR30. a. The CAIR Permit portion of this permit is deemed to incorporate automatically the definitions of terms under 45CSR§41-2 and, upon recordation by the Administrator under sections 51 through 57, or 60 through 62 of 45CSR41, every allocation, transfer, or deduction of a CAIR SO_2 allowance to or from the compliance account of the CAIR SO_2 source covered by the permit. b. Except as provided in 45CSR§41-23.2, the Secretary will revise the CAIR Permit portion of this permit, as necessary, in accordance with the operating permit revision requirements set forth in 45CSR30.	FWTRR-6 FWTRR-8 FWTRR-10 FWTRR-11

20A. Facility-Wide Applicable Requirements

List all facility-wide applicable requirements. For each applicable requirement, include the rule citation and/or permit with the condition number.

Link From General Form, Item 20	Applicable Requirement Citation	Permit Condition Number from Permit R30-02300014-2005	Requirement Summary	Monitoring / Testing / Recordkeeping / Reporting Requirement Links
FWAR-14	10/10/2003 VEPCO Consent Decree	New	**NEW APPLICABLE REQUIREMENT: Consent Decree-** The Consent Decree entered by the United States District Court for the Eastern District of Virginia, Civil Action Nos. 03-CV-517-A and 03-CV-603-A, on October 10, 2003 between Virginia Electric and Power Company and the United States of America, et al. (the "Consent Decree") , as such Consent Decree might be amended or modified from time to time in accordance with its terms, is incorporated in its entirety into this permit by reference and is attached as Appendix ____ to this permit. The permittee's obligations under this permit shall be to comply with the terms and conditions of the Consent Decree that relate to the operation of Mount Storm Power Station exclusively, and such compliance shall be determined exclusively by reference to the terms and conditions of the Decree. Whenever any conflict or ambiguity arises between the Consent Decree and this permit, the terms and conditions of the Consent Decree control. Compliance with the monitoring, recordkeeping, reporting, testing and compliance certification requirements in the Consent Decree that relate to the operation of Mount Storm Power station shall be deemed to satisfy the monitoring, recordkeeping, reporting, testing, and compliance certification requirements of this permit arising out of the terms and conditions of the Consent Decree.	FWTRR-14

20A. Facility-Wide Applicable Requirements

List all facility-wide applicable requirements. For each applicable requirement, include the rule citation and/or permit with the condition number.

Link From General Form, Item 20	Applicable Requirement Citation	Permit Condition Number from Permit R30-02300014-2005	Requirement Summary	Monitoring / Testing / Recordkeeping / Reporting Requirement Links
FWAR-15	Paragraph 5 of the10/10/2003 VEPCO Consent Decree	New	**NEW APPLICABLE REQUIREMENT: Consent Decree** - "30-Day Rolling Average Emission Rate" for a Unit means and is calculated by (A) summing the total pounds of the pollutant in question emitted from the Unit during an Operating Day and the previous twenty-nice (29) Operating Days; (B) summing the total heat input to the Unit in mmBTU during the Operating Day and during the previous twenty-nine (29) Operating Days; and (C) dividing the total number of pounds of pollutants emitted during the thirty (30) Operating Days by the total heat input during the thirty (30) Operating Days, and converting the resulting value to lbs/mmBTU. In calculating all 30-Day Rolling Average Emission Rates VEPCO: A. shall include all emissions and BTUs commencing from the time the Unit is synchronized with a utility electric distribution system through the time that the Unit ceases to combust fossil fuel and the fire is out in the boiler, except as provided by Subparagraph B, C, or D B. shall use the methodologies and procedures set forth in 40 C.F.R. Part 75; C. may exclude emissions of NOx and BTUs occurring during the fifth and subsequent Cold Start Up Period(s) that occur in any 30-Day period if inclusion of such emissions would result in a violation of any applicable 30-Day Rolling Average Emissions Rate, and if VEPCO has installed, operated and maintained the SCR in question in accordance with manufacturers' specifications and good engineering practices. A "Cold Start Up Period" occurs whenever there has been no fire in the boiler of a Unit (no combustion of any fossil fuel) for a period of six hours or more. The emissions to be excluded during the fifth and subsequent Cold Start Up Period(s) shall be the less of (1) those NOx emission emitted during the eigth hour period commencing when the Unit is synchronized with a utility electric distribution system and concluding eight hours later or (2) those emitted prior to the time that the flue gas has achieved the SCR operational temperature as specified by the catalyst manufacturer; and D. may exclude NOx emission and BTUs occurring during any period of malfunction (as defined at 40 C.F.R. 60.2) of the SCR.	FWTRR-14
FWAR-16	Paragraphs 56, 57, and 58 of the 10/10/2003 VEPCO Consent Decree	New	**NEW APPLICABLE REQUIREMENT: Consent Decree** – Units 1, 2, and 3 shall operate with the SCR on a year-round basis and meet a 30-Day Rolling Average Emission Rate for NOx of 0.110 lb/mmBtu for each Unit. The permittee shall use best efforts to operate each SCR in accordance with manufacturer's specifications, good engineering practices, and facility operational and maintenance needs.	FWTRR-14

20A. Facility-Wide Applicable Requirements

List all facility-wide applicable requirements. For each applicable requirement, include the rule citation and/or permit with the condition number.

Link From General Form, Item 20	Applicable Requirement Citation	Permit Condition Number from Permit R30-02300014-2005	Requirement Summary	Monitoring / Testing / Recordkeeping / Reporting Requirement Links
FWAR-17	Paragraph 66 of the 10/10/2003 VEPCO Consent Decree	New	**NEW APPLICABLE REQUIREMENT: Consent Decree –** Mount Storm Units 1, 2, and 3 are meeting a 95% reduction efficiency for SO_2 on a 30-Day Rollng Average basis. In lieu of the 95.0%, 30-Day Rolling Average reduction efficiency, the permittee may choose to meet an emission rate of 0.150 lb/mmBtu with written, prior notice to the Consent Decree Plaintiffs.	FWTRR-14
FWAR-18	Paragraph 67 of the 10/10/2003 VEPCO Consent Decree	New	**NEW APPLICABLE REQUIREMENT: Consent Decree –** Interim Mitigation of Mount Storm SO_2 Emissions While FGDs are Improved. Notwithstanding the requirement to meet a specific percent removal or emission rate at Mount Storm Units 1, 2, or 3, in limited circumstances, VEPCO may operate such Units without meeting required Removal Efficiencies or Emission Rates in the case of FGD scrubber outages or downtime of the FGD scrubber serving each such Unit, if such operation complies with the following requirements. FGD outage or downtime "day" shall consist of a 24-hour block period commencing in the hour the FGD ceases to operate, and continuing in successive 24-hour periods until the hour the FGD is placed back into operation. Any period of less than 24 hours of FGD downtime shall count as a full "day". For the FGD serving Unit 3, because it has two separately operating absorber vessels, outage or downtime may be measured in "1/2 day" (12-hour) increments – one for each absorber – but otherwise on the same basis as a "day" is counted for outage or downtime on the FGDs serving Units 1 and 2. In any calendar year from 2008 through 2012, VEPCO may operate Mount Storm Units 1, 2, or 3 in the case of FGD outages or downtime, if all of the following conditions are satisfied: (i) VEPCO does not operate Mount Storm Units 1, 2, or 3 during FGD outages or downtime on more than ten (10) "days", or part thereof, in any calendar year; in the case of Mount Storm Unit 3, operation during an outage or downtime in either of the two FGD absorber vessels serving the Unit shall count as "1/2" day of operation during an FGD outage or downtime; (ii) All other available VEPCO System Units on-line at the Mount Storm Station and Clover Station are dispatched ahead of the Mount Storm Unit experiencing the FGD outage or downtime; and (iii) VEPCO surrenders to EPA (using the procedure of Section VI, Paragraph 72) one SO_2 Allowance, in addition to any surrender or possession of allowances required under Title IV or under any other provision of this Consent Decree, for each ton of SO_2 actually emitted in excess of SO_2 emissions that would have occurred if coal with 1.50 lb/mmBTU sulfur had been burned.	FWTRR-14
FWAR-19	Paragraphs 69 of the 10/10/2003 VEPCO Consent Decree	New	**NEW APPLICABLE REQUIREMENT: Consent Decree –** FGD systems shall be operated consistent with manufacturers' specifications, good engineering practices and the facility's operational and maintenance needs.	FWTRR-14

20A. Facility-Wide Applicable Requirements

List all facility-wide applicable requirements. For each applicable requirement, include the rule citation and/or permit with the condition number.

Link From General Form, Item 20	Applicable Requirement Citation	Permit Condition Number from Permit R30-02300014-2005	Requirement Summary	Monitoring / Testing / Recordkeeping / Reporting Requirement Links
FWAR-20	Paragraph 78 of the 10/10/2003 VEPCO Consent Decree	New	**NEW APPLICABLE REQUIREMENT: Consent Decree -** The facility shall operate Mount Storm's Units 1, 2, and 3 ESPs to maximize PM emission reductions through procedures established in the Paragraph. (A) Commence operation no later than two hours after commencement of combustion of any amount of coal, and provided that, for all ESP-equipped units, "combustion of any amount of coal" shall not include combustion of coal that is the result of clearing out a Unit's coal mills as the Unit is returned to service. (B) Fully energize each available portion of each ESP, except those ESP fields that have been out of service since at least January 1, 2000, consistent with manufacturer' specifications, the operational design of the Unit, and good engineering practices, and repair such fields that go out of service consistent with the requirements of this Paragraph. (C) Maintain power levels delivered to the ESPs, consistent with manufacturers' specifications, the operational design of the Unit and good engineering practices. (D) Continuously operate Mount Storm Units 1, 2, and 3 ESPs in compliance with manufacturers' specifications, the operational design of the Unit, and good engineering practices. Whenever any element of any ESP that has been in service at any time since January 1, 2000 fails, does not perform in accordance with manufacturers' specifications and good engineering practices, or does not operate in accordance with standards set forth in this Paragraph, the permittee shall use best efforts to repair the element no later than the next available Unit outage appropriate to the repair task.	FWTRR-14
FWAR-21	Paragraph 80 of 10/10/2003 VEPCO Consent Decree	New	**NEW APPLICABLE REQUIREMENT: Consent Decree-** The permittee shall operate and maintain the ESPs in compliance with the approved ESP optimization plan.	FWTRR-14
FWAR-22	Paragraph 80 of the 10/10/2003 VEPCO Consent Decree (start date found in Paragraph 64)	New	**NEW APPLICABLE REQUIREMENT: Consent Decree -** Units 1, 2, and 3 shall meet a PM emission limit of 0.030 lb/mmBtu.	FWTRR-14
FWAR-23	Paragraph 81 of the 10/10/2003 VEPCO Consent Decree	New	**NEW APPLICABLE REQUIREMENT: Consent Decree -** The 0.030 lb/mmBtu PM Emission Rate shall not apply during periods of "startup" and "shutdown" or during periods of control equipment or Unit malfunction. Periods of 'startup' shall not exceed two hours after any amount of coal is combusted. Periods of 'shutdown' shall only commence when the Unit ceases burning any amount of coal. Coal shall not be deemed to be combusted if it is burned as a result of clearing out a Unit's coal mill as the Unit is returned to service.	FWTRR-14

20A. Facility-Wide Applicable Requirements List all facility-wide applicable requirements. For each applicable requirement, include the rule citation and/or permit with the condition number.				
Link From General Form, Item 20	**Applicable Requirement Citation**	**Permit Condition Number from Permit R30-02300014-2005**	**Requirement Summary**	**Monitoring / Testing / Recordkeeping / Reporting Requirement Links**
FWAR-24	Paragraph 95 of 10/10/2003 VEPCO Consent Decree	New	**NEW APPLICABLE REQUIREMENT: Consent Decree-** Commencing in 2004, the permittee shall conduct a stack test for PM on each boiler stack. The stack test shall be conducted at least once per every four successive "QA Operating Quarters" (as defined in 40 CFR 72.2).	FWTRR-14
FWAR-25	Appendix B III.C.1.a of 10/10/2003 VEPCO Consent Decree	New	**NEW APPLICABLE REQUIREMENT: Consent Decree -** The permittee shall report results of the PM stack tests in accordance with "Appendix B Section III.C.1.a – Reporting Requirements."	FWTRR-14
FWAR-26	Paragraph 95 and Appendix B of 10/10/2003 VEPCO Consent Decree	New	**NEW APPLICABLE REQUIREMENT: Consent Decree -** The permittee shall submit semi-annual reports required under Appendix B of the Consent Decree, until expiration of the Decree.	FWTRR-14

20A. Facility-Wide Applicable Requirements

List all facility-wide applicable requirements. For each applicable requirement, include the rule citation and/or permit with the condition number.

Link From General Form, Item 20	Applicable Requirement Citation	Permit Condition Number from Permit R13-2735	Requirement Summary	Monitoring / Testing / Recordkeeping / Reporting Requirement Links
FWAR-27	Permit R13-2735	4.1.1	**NEW APPLICABLE REQUIREMENT:** The emission rate of filterable PM10 from Unit 1 and Unit 2, as emitted from Emission Point MS 1/2e, shall not exceed 0.03 lb/mmBtu on a 6-hour average.	FWTRR-14
FWAR-28	Permit R13-2735	4.1.2	**NEW APPLICABLE REQUIREMENT:** The aggregate emission rate of filterable PM10 from Unit 3, as emitted from Emission Point MS3e, shall not exceed 0.03 lb/mmBtu on a 6-hour average	FWTRR-14
FWAR-29	Permit R13-2735	4.1.3	**NEW APPLICABLE REQUIREMENT:** Unit 1, Unit 2 and Unit 3 shall utilize, at all reasonable times, dry electrostatic precipitation (ESP) and wet Flue-Gas Desulfurization (FGD) to achieve a minimum PM10 control of 99.50% (on a 6-hour average).	FWTRR-14
FWAR-30	Permit R13-2735	4.2.1	**NEW APPLICABLE REQUIREMENT: Monitoring Requirements** The permittee shall calculate the potential particulate matter emissions from Unit 1, Unit 2, and Unit 3 on a daily basis using the monitoring procedures and calculation methodology outlined in the 45CSR2 monitoring plan. The permittee shall record any instance of calculated emissions in excess of the limits and any corrective actions therefore taken.	FWTRR-14

20A. Facility-Wide Applicable Requirements

List all facility-wide applicable requirements. For each applicable requirement, include the rule citation and/or permit with the condition number.

Link From General Form, Item 20	Applicable Requirement Citation	Permit Condition Number from Permit R13-2735	Requirement Summary	Monitoring / Testing / Recordkeeping / Reporting Requirement Links
FWAR-31	Permit R13-2735	4.2.2	**NEW APPLICABLE REQUIREMENT: Monitoring Requirements.** The permittee shall maintain and operate, at all reasonable times appropriate equipment on the ESP and FGD to continuously monitor the performance of each control device.	FWTRR-14
FWAR-32	Permit R13-2735, 45CSR§2A-5.2	4.3.1	**NEW APPLICABLE REQUIREMENT: Testing Requirements.** The permittee shall conduct, or shall have conducted, tests to determine the compliance of Unit 1, Unit 2, and Unit 3 Boiler's emission limits and control efficiency on a per stack basis. Control efficiency shall be calculated using material balance based emissions for the inlet and the results of the stack test for the outlet emissions. Such tests shall be conducted in accordance with approved test methods proposed in the R13-2735 permit Section 3.3. The initial baseline compliance test was completed on March 1, 2002 and the test results were <50% of the weight emission standard. The testing frequency was therefore determined to be a "Once /3years." In accordance with the retest frequency, a test was completed on September 16, 2004 and resulted in mass emission rates <50% of the weight emission standard. Therefore, the current testing frequency is "Once/3 years." The initial control efficiency test was conducted within 18months of the issuance of the BART permit dated 12/13/2007. Subsequent testing shall be based on the schedule set forth in Section 4.0 of the Title V permit.	FWTRR-14
FWAR-33	Permit R13-2735	4.4.2	**NEW APPLICABLE REQUIREMENT: Record of Maintenance of Air Pollution Control Equipment.** For all pollution control equipment listed in the BART permit (ESPs, FGDs), the permittee shall maintain accurate records of all required pollution control equipment inspection and/or preventative maintenance procedures	FWTRR-14

20A. Facility-Wide Applicable Requirements

List all facility-wide applicable requirements. For each applicable requirement, include the rule citation and/or permit with the condition number.

Link From General Form, Item 20	Applicable Requirement Citation	Permit Condition Number from Permit R13-2735	Requirement Summary	Monitoring / Testing / Recordkeeping / Reporting Requirement Links
FWAR-34	Permit R13-2735	4.4.3	**NEW APPLICABLE REQUIREMENT: Record of Malfunctions of Air Pollution Control Equipment.** For all air pollution control equipment listed in the BART permit (ESPs, FGDs), the permittee shall maintain records of the occurrence and duration of any malfunction or operational shutdown of the air pollution control equipment during which excess emissions occur. For each such case, the following information shall be recorded: a. The equipment involved. b. Steps taken to minimize emissions during the event. c. The duration of the event. d. The estimated increase in emissions during the event. For each such case associated with an equipment malfunction, the additional information shall also be recorded: e. The cause of the malfunction. f. Steps taken to correct the malfunction. g. Any changes or modifications to equipment or procedures that would help prevent future recurrences of the malfunction.	FWTRR-14
FWAR-35	Permit R13-2735	4.5.1	**NEW APPLICABLE REQUIREMENT: Reporting Requirements.** The permittee shall maintain on-site records of monitoring required under 4.2 of the BART permit for a period of five years and make these records available to the Secretary upon request. The permittee shall submit deviation reports on or before September 15 for the reporting period January 1 to June 30 and on or before March 15 for the reporting period January 1 to June 30 and on or before March 15 for the reporting period July 1 to December 31. All required reports must be certified by a responsible official.	FWTRR-14

20B. Facility-Wide Testing, Recordkeeping and Reporting Requirements

For all facility-wide applicable requirements listed above, provide monitoring /testing/recordkeeping/reporting which shall be used to demonstrate compliance. If method is based on a permit or rule, include the condition number and/or citation. (Note: Each requirement listed above must have an associated method of demonstrating compliance. If there is not already a required method in place, then a method must be proposed.)

Link from Table 20A	Applicable Requirement Citation	Permit Condition Number from Permit R30-02300014-2005	Requirement Summary
FWTRR-1	WV Code § 22-5-4(a)(15), 45CSR2, 45CSR10 45CSR13, and 45CSR14	3.3.1	**Testing - Stack testing.** As per provisions set forth in this permit or as otherwise required by the Secretary, in accordance with the West Virginia Code, underlying regulations, permits and orders, conduct test(s) to determine compliance with the emission limitations set forth in this permit and/or established or set forth in underlying documents. The Secretary, or his duly authorized representative, may at his option witness or conduct such test(s). Should the Secretary exercise his option to conduct such test(s), the operator shall provide all necessary sampling connections and sampling ports to be located in such manner as the Secretary may require, power for test equipment and the required safety equipment, such as scaffolding, railings and ladders, to comply with generally accepted good safety practices. Such tests shall be conducted in accordance with the methods and procedures set forth in this permit or as otherwise approved or specified by the Secretary in accordance with the following: **a.** The Secretary may on a source-specific basis approve or specify additional testing or alternative testing to the test methods specified in the permit for demonstrating compliance with 40C.F.R. Parts 60,61, and 63 in accordance with the Secretary's delegated authority and any established equivalency determination methods which are applicable. **b.** The Secretary may on a source-specific basis approve or specify additional testing or alternative testing to the test methods specified in the permit for demonstrating compliance with applicable requirements which do not involve federal delegation. In specifying or approving such alternative testing to the test methods, the Secretary, to the extent possible, shall utilize the same equivalency criteria as would be used in approving such changes under Section 3.3.1.a of this permit. c. All periodic tests to determine mass emission limits from or air pollutant concentrations in discharge stacks and such other tests as specified in this permit shall be conducted in accordance with an approved test protocol. Unless previously approved, such protocols shall be submitted to the Secretary in writing at least thirty (30) days prior to any testing and shall contain the information set forth by the Secretary. In addition, the permittee shall notify the Secretary at least fifteen (15) days prior to any testing so the Secretary may have the opportunity to observe such tests. This notification shall include the actual date and time during which the test will be conducted and, if appropriate, verification that the tests will fully conform to a referenced protocol previously approved by the Secretary.

20B. Facility-Wide Testing, Recordkeeping and Reporting Requirements

For all facility-wide applicable requirements listed above, provide monitoring /testing/recordkeeping/reporting which shall be used to demonstrate compliance. If method is based on a permit or rule, include the condition number and/or citation. (Note: Each requirement listed above must have an associated method of demonstrating compliance. If there is not already a required method in place, then a method must be proposed.)

Link from Table 20A	Applicable Requirement Citation	Permit Condition Number from Permit R30-02300014-2005	Requirement Summary
FWTRR-2	45CSR§30.5.1.c.2.A	3.4.1	**Recordkeeping - Monitoring information.** The permittee shall keep records of monitoring information that include the following: **a.** The date, place as defined in this permit and time of sampling or measurements; **b.** The date(s) analyses were performed; **c.** The company or entity that performed the analyses; **d.** The analytical techniques or methods used; **e.** The results of the analyses; and **f.** The operating conditions existing at the time of sampling or measurement.
FWTRR-3	45CSR§30-5.1.c.2.B	3.4.2	**Recordkeeping - Retention of records.** The permittee shall retain records of all required monitoring data and support information for a period of at least five (5) years from the date of monitoring sample, measurement, report, application, or record creation date. Support information includes all calibration and maintenance records and all original strip-chart recordings for continuous monitoring instrumentation, and copies of all reports required by the permit. Where appropriate, records may be maintained in computerized form in lieu of the above records.
FWTRR-4	45CSR§30-5.1.c State-Enforceable only	3.4.3	**Recordkeeping - Odors.** For the purposes of 45CSR4, the permittee shall maintain a record of all odor complaints received, any investigation performed in response to such a complaint, and any responsive action(s) taken.

20B. Facility-Wide Testing, Recordkeeping and Reporting Requirements

For all facility-wide applicable requirements listed above, provide monitoring /testing/recordkeeping/reporting which shall be used to demonstrate compliance. If method is based on a permit or rule, include the condition number and/or citation. (Note: Each requirement listed above must have an associated method of demonstrating compliance. If there is not already a required method in place, then a method must be proposed.)

Link from Table 20A	Applicable Requirement Citation	Permit Condition Number from Permit R30-02300014-2005	Requirement Summary
FWTRR-5	45CSR§30-5.1.c	3.4.4	**Recordkeeping – Dust Control.** The permittee shall maintain records indicating the use of any dust suppressants or any other suitable dust control measures applied at the facility. The permittee shall also inspect all fugitive dust control systems weekly from May 1 through September 30 and monthly from October 1 through April 30 to ensure that they are operated and maintained in conformance with their designs. The permittee shall maintain records of all scheduled and non-scheduled maintenance and shall state any maintenance or corrective actions taken as a result of the weekly and/or monthly inspections, the times the fugitive dust control system(s) were inoperable and any corrective actions taken.
FWTRR-6	45CSR§§30-4.4. *and* 5.1.c.3.D	3.5.1	**Reporting - Responsible official.** Any application form, report, or compliance certification required by this permit to be submitted to the DAQ and/or USEPA shall contain a certification by the responsible official that states that, based on information and belief formed after reasonable inquiry, the statements and information in the document are true, accurate and complete
FWTRR-7	45CSR§30-5.1.c.3.E	3.5.2	**Reporting - Confidential Information.** A permittee shall request confidential treatment for the submission of reporting required under 45CSR§30-5.1.c.3. pursuant to the limitations and procedures of W.Va. Code § 22-5-10 and 45CSR31.

20B. Facility-Wide Testing, Recordkeeping and Reporting Requirements

For all facility-wide applicable requirements listed above, provide monitoring /testing/recordkeeping/reporting which shall be used to demonstrate compliance. If method is based on a permit or rule, include the condition number and/or citation. (Note: Each requirement listed above must have an associated method of demonstrating compliance. If there is not already a required method in place, then a method must be proposed.)

Link from Table 20A	Applicable Requirement Citation	Permit Condition Number from Permit R30-02300014-2005	Requirement Summary
FWTRR-8	None	3.5.3	**Reporting – Delivery Addresses.** All notices, requests, demands, submissions and other communications required or permitted to be made to the Secretary of DEP and/or USEPA shall be made in writing and shall be deemed to have been duly given when delivered by hand, or mailed first class with postage prepaid to the address(es) set forth below or to such other person or address as the Secretary of the Department of Environmental Protection may designate: **If to the DAQ:** Director WVDEP Division of Air Quality 601 57th Street SE Charleston, WV 25304-2943 Phone: 304/926-0475 FAX: 304/926-0478 **If to the US EPA:** Associate Director Office of Enforcement and Permits Review (3AP12) U. S. Environmental Protection Agency Region III 1650 Arch Street Philadelphia, PA 19103-2029
FWTRR-9	45CSR§30-8	3.5.4	**Reporting - Certified emissions statement.** The permittee shall submit a certified emissions statement and pay fees on an annual basis in accordance with the submittal requirements of the Division of Air Quality.
FWTRR-10	45CSR§30-5.3.e	3.5.5	**Reporting - Compliance certification.** The permittee shall certify compliance with the conditions of this permit on the forms provided by the DAQ. In addition to the annual compliance certification, the permittee may be required to submit certifications more frequently if required under an applicable requirement of this permit. The annual certification shall be submitted to the DAQ and USEPA on or before March 15 of each year, and shall certify compliance for the period ending December 31. The permittee shall maintain a copy of the certification on site for five (5) years from submittal of the certification.

20B. Facility-Wide Testing, Recordkeeping and Reporting Requirements

For all facility-wide applicable requirements listed above, provide monitoring /testing/recordkeeping/reporting which shall be used to demonstrate compliance. If method is based on a permit or rule, include the condition number and/or citation. (Note: Each requirement listed above must have an associated method of demonstrating compliance. If there is not already a required method in place, then a method must be proposed.)

Link from Table 20A	Applicable Requirement Citation	Permit Condition Number from Permit R30-02300014-2005	Requirement Summary
FWTRR-11	45CSR§30-5.1.c.3.A	3.5.6	**Reporting - Semi-annual monitoring reports.** The permittee shall submit reports of any required monitoring on September 15 for the reporting period January 1 to June 30 and March 15 for the reporting period July 1 to December 31. All instances of deviation from permit requirements must be clearly identified in such reports. All required reports must be certified by a responsible official consistent with 45CSR§30-4.4.

20B. Facility-Wide Testing, Recordkeeping and Reporting Requirements

For all facility-wide applicable requirements listed above, provide monitoring /testing/recordkeeping/reporting which shall be used to demonstrate compliance. If method is based on a permit or rule, include the condition number and/or citation. (Note: Each requirement listed above must have an associated method of demonstrating compliance. If there is not already a required method in place, then a method must be proposed.)

Link from Table 20A	Applicable Requirement Citation	Permit Condition Number from Permit R30-02300014-2005	Requirement Summary
FWTRR-12	45CSR§30-5.7.a, b, c, d, e	3.5.7 and 2.17	**Recordkeeping and Reporting - Emergency.** An "emergency" means any situation arising from sudden and reasonably unforeseeable events beyond the control of the source, including acts of God, which situation requires immediate corrective action to restore normal operation, and that causes the source to exceed a technology-based emission limitation under the permit, due to unavoidable increases in emissions attributable to the emergency. An emergency shall not include noncompliance to the extent caused by improperly designed equipment, lack of preventative maintenance, careless or improper operation, or operator error. Effect of any emergency. An emergency constitutes an affirmative defense to an action brought for noncompliance with such technology-based emission limitations if the conditions of 45CSR§30.5.7.c are met. The affirmative defense of emergency shall be demonstrated through properly signed, contemporaneous operating logs, or other relevant evidence that: **a.** An emergency occurred and that the permittee can identify the cause(s) of the emergency; **b.** The permitted facility was at the time being properly operated; **c.** During the period of the emergency the permittee took all reasonable steps to minimize levels of emissions that exceeded the emission standards, or other requirements in the permit; and **d.** Subject to the requirements of 45CSR§30-5.1.c.3.C.1, the permittee submitted notice of the emergency to the Secretary within one (1) working day of the time when emission limitations were exceeded due to the emergency and made a request for variance, and as applicable rules provide. This notice, report, and variance request fulfills the requirement of 45CSR§30-5.1.c.3.B. This notice must contain a detailed description of the emergency, any steps taken to mitigate emissions, and corrective actions taken. In any enforcement proceeding, the permittee seeking to establish the occurrence of an emergency has the burden of proof. This provision is in addition to any emergency or upset provision contained in any applicable requirement.

20B. Facility-Wide Testing, Recordkeeping and Reporting Requirements

For all facility-wide applicable requirements listed above, provide monitoring /testing/recordkeeping/reporting which shall be used to demonstrate compliance. If method is based on a permit or rule, include the condition number and/or citation. (Note: Each requirement listed above must have an associated method of demonstrating compliance. If there is not already a required method in place, then a method must be proposed.)

Link from Table 20A	Applicable Requirement Citation	Permit Condition Number from Permit R30-02300014-2005	Requirement Summary
FWTRR-13	45CSR§30-5.1.c.3.C and 45CSR§30-5.1.c.3.B	3.5.8	**Reporting – Deviations** a. In addition to monitoring reports required by this permit, promptly submit supplemental reports and notices in accordance with the following: **1.** Any deviation resulting from an emergency or upset condition, as defined 45CSR§30-5.7., shall be reported by telephone or telefax within one (1) working day of the date on which the permittee becomes aware of the deviation, if the permittee desires to assert the affirmative defense in accordance with 45CSR§30-5.7. A written report of such deviation, which shall include the probable cause of such deviations, and any corrective actions or preventative measures taken, shall be submitted and certified by a responsible official within ten (10) days of the deviation. **2.** Any deviation that poses an imminent and substantial danger to public health, safety, or the environment shall be reported to the Secretary immediately by telephone or telefax. A written report of such deviation, which shall include the probable cause of such deviation, and any corrective actions or preventative measures taken, shall be submitted by the responsible official within ten (10) days of the deviation. **3.** Deviations for which more frequent reporting is required under this permit shall be reported on the more frequent basis. **4.** All reports of deviations shall identify the probable cause of the deviation and any corrective actions or preventative measures taken. b. The permittee shall, in the reporting of deviations from permit requirements, including those attributable to upset conditions as defined in this permit, report the probable cause of such deviation and any corrective actions or preventive measures taken in accordance with any rules of the Secretary
FWTRR-14	45CSR§30-4.3.h.1.B	3.5.9	**New applicable requirements.** If any applicable requirement is promulgated during the term of this permit, the permittee will meet such requirements on a timely basis, or in accordance with a more detailed schedule if required by the applicable requirement.

20B. Facility-Wide Testing, Recordkeeping and Reporting Requirements

For all facility-wide applicable requirements listed above, provide monitoring /testing/recordkeeping/reporting which shall be used to demonstrate compliance. If method is based on a permit or rule, include the condition number and/or citation. (Note: Each requirement listed above must have an associated method of demonstrating compliance. If there is not already a required method in place, then a method must be proposed.)

Link from Table 20A	Applicable Requirement Citation	Permit Condition Number from Permit R30-02300014-2005	Requirement Summary
FWTRR-15	45CSR§30-5.6	3.7.1	**Permit Shield.** The permittee is hereby granted a permit shield in accordance with 45CSR§30-5.6. The permit shield applies provided the permittee operates in accordance with the information contained within this permit.

20B. Facility-Wide Testing, Recordkeeping and Reporting Requirements

For all facility-wide applicable requirements listed above, provide monitoring /testing/recordkeeping/reporting which shall be used to demonstrate compliance. If method is based on a permit or rule, include the condition number and/or citation. (Note: Each requirement listed above must have an associated method of demonstrating compliance. If there is not already a required method in place, then a method must be proposed.)

Link from Table 20A	Applicable Requirement Citation	Permit Condition Number from Permit R30-02300014-2005	Requirement Summary
FWTRR-16	None	3.7.2	The following requirements specifically identified are not applicable to the source based on the determinations set forth below. The permit shield shall apply to the following requirements provided the conditions of the determinations are met. 40 CFR 60 Subpart D / 40 CFR 60 Subpart Da: The Steam Generators potentially subject to these rules commenced construction prior to August 17, 1971 40 CFR 60 Subpart Db: The Steam Generator potentially subject to this rule commenced construction prior to June 19, 1984 40 CFR 60 Subpart Dc: This facility does not have Steam Generators less than 100 mmBtu/hr heat input but greater than 10 mmBtu/hr heat input. 40 CFR 60 Subpart K: The facility does not include storage vessels that are used to store petroleum liquids (as defined in 40 CFR 60.111(b)) which construction, reconstruction, or modification commenced after June 11, 1973 and prior to May 19, 1978. 40 CFR 60 Subpart Ka: The facility does not include storage vessels that are used to store petroleum liquids (as defined in 40 CFR 60.111a(b)) which construction, reconstruction, or modification commenced after May 18, 1978 and prior to July 23, 1984. 40 CFR 60 Subpart Kb: Storage vessels potentially affected by this subpart have a storage capacity of less than 75 cubic meters and therefore are not subject to this subpart. 40 CFR 60 Subpart GG: The Combustion Turbine potentially subject to this rule commenced construction prior to October 3, 1977 and combusts Jet Fuel Oil. 40 CFR 82 Subpart B: The facility does not conduct motor vehicle maintenance involving CFCs on site.

21. Active Permits/Consent Orders		
Permit or Consent Order Number	Date of Issuance MM/DD/YYYY	List any Permit Determinations that Affect the Permit *(if any)*
R30-02300003-2005	10/19/2005	
R13-0656	June 4, 1982	
R13-1438	February 20, 1992	
R13-1660D	May 13, 2003	Supersedes and replaces R13-1660C issued January 5, 2002 which superseded and replaced R13-1660B issued July 10, 1998 which superseded and replaced R13-1660R issued February 18, 1997 which superseded and replaced the original permit R13-1660 issued February 28, 1994
R13-1661/R14-10	August 12, 1994	
R13-2034C	August 4, 2008	Supersedes and replaces R13-2034B issued February 22, 2008 and permit R13-253A issued March 8, 2005. R13-2034B supersedes and replaced R13-2034A issued March 13, 2006 which superseded and replaced R13-2034 issued July 23, 1996
Mt. Storm NOx Budget Permit – Unit 1, 2 and 3 Boilers	February 7 2002	Incorporated in to Title V permit[1]
R33-3954-2012-3	December 18, 2007	Effective January 1, 2008
Consent Decree: No. 03-CV-517A (US vs. VEPCO)	10/03/2003	
CO-R39-C-2009-11	June 26, 2009	Compliance Order
R13-2735	December 13, 2007	
	/ /	
	/ /	
	/ /	
	/ /	
	/ /	
	/ /	
	/ /	

[1]Beginning January 1, 2009, CAIR's NOx ozone season was implemented, replacing the NOx Budget Plan, therefore, we believe that this has been superseded by CAIR.

22. Inactive Permits/Obsolete Permit Conditions		
Permit Number	Date of Issuance	Permit Condition Number
R13-2593A	March 8, 2005	Entire permit
R33-3954-2007-2	December 26, 2002	Entire permit
	/ /	
	/ /	
	/ /	
	/ /	
	/ /	
	/ /	
	/ /	
	/ /	
	/ /	
	/ /	
	/ /	
	/ /	
	/ /	
	/ /	
	/ /	
	/ /	
	/ /	
	/ /	
	/ /	
	/ /	
	/ /	
	/ /	
	/ /	
	/ /	

Section 3: Facility-Wide Emissions

23. Facility-Wide Emissions Summary [Tons per Year]	
Criteria Pollutants	Potential Emissions
Carbon Monoxide (CO)	11,310.19
Nitrogen Oxides (NO_X)	6,739.16
Lead (Pb)	0.21
Particulate Matter ($PM_{2.5}$)[1]	**
Particulate Matter (PM_{10})[1]	2329.13
Total Particulate Matter (TSP)	3984.21
Sulfur Dioxide (SO_2)	204,092.37
Volatile Organic Compounds (VOC)	186.74
Hazardous Air Pollutants[2]	
Manganese	1.20
Mercury	0.01
Beryllium	0.01
Arsenic	0.68
Chromium	16.72
Nickel	0.38
Hydrogen Chloride	184.58
Hydrogen Fluoride	23.07
Selenium	4.01
Cadmium	0.05
Regulated Pollutants other than Criteria and HAP	Potential Emissions
Sulfuric Acid Mist	319.92

[1]PM2.5 and PM10 are components of TSP.
[2]For HAPs that are also considered PM or VOCs, emissions should be included in both the HAPs section and the Criteria Pollutants section.

***PM 2.5 is included in Total Particulate Matter(TSP)*

Section 4: Insignificant Activities

24. Insignificant Activities (Check all that apply)		
☒	1.	Air compressors and pneumatically operated equipment, including hand tools.
☒	2.	Air contaminant detectors or recorders, combustion controllers or shutoffs.
☒	3.	Any consumer product used in the same manner as in normal consumer use, provided the use results in a duration and frequency of exposure which are not greater than those experienced by consumer, and which may include, but not be limited to, personal use items; janitorial cleaning supplies, office supplies and supplies to maintain copying equipment.
☒	4.	Bathroom/toilet vent emissions.
☒	5.	Batteries and battery charging stations, except at battery manufacturing plants.
☒	6.	Bench-scale laboratory equipment used for physical or chemical analysis, but not lab fume hoods or vents. Many lab fume hoods or vents might qualify for treatment as insignificant (depending on the applicable SIP) or be grouped together for purposes of description.
☐	7.	Blacksmith forges.
☒	8.	Boiler water treatment operations, not including cooling towers.
☒	9.	Brazing, soldering or welding equipment used as an auxiliary to the principal equipment at the source.
☐	10.	CO_2 lasers, used only on metals and other materials which do not emit HAP in the process.
☒	11.	Combustion emissions from propulsion of mobile sources, except for vessel emissions from Outer Continental Shelf sources.
☐	12.	Combustion units designed and used exclusively for comfort heating that use liquid petroleum gas or natural gas as fuel.
☒	13.	Comfort air conditioning or ventilation systems not used to remove air contaminants generated by or released from specific units of equipment.
☒	14.	Demineralized water tanks and demineralizer vents.
☐	15.	Drop hammers or hydraulic presses for forging or metalworking.
☒	16.	Electric or steam-heated drying ovens and autoclaves, but not the emissions from the articles or substances being processed in the ovens or autoclaves or the boilers delivering the steam.
☐	17.	Emergency (backup) electrical generators at residential locations.
☒	18.	Emergency road flares.
☐	19.	Emission units which do not have any applicable requirements and which emit criteria pollutants (CO, NO_x, SO_2, VOC and PM) into the atmosphere at a rate of less than 1 pound per hour and less than 10,000 pounds per year aggregate total for each criteria pollutant from all emission units. Please specify all emission units for which this exemption applies along with the quantity of criteria pollutants emitted on an hourly and annual basis: _____ _____ _____ _____ _____ _____ _____ _____ _____

24. Insignificant Activities (Check all that apply)		
☐	20.	Emission units which do not have any applicable requirements and which emit hazardous air pollutants into the atmosphere at a rate of less than 0.1 pounds per hour and less than 1,000 pounds per year aggregate total for all HAPs from all emission sources. This limitation cannot be used for any source which emits dioxin/furans nor for toxic air pollutants as per 45CSR27. Please specify all emission units for which this exemption applies along with the quantity of hazardous air pollutants emitted on an hourly and annual basis: _____ _____ _____ _____ _____
☐	21.	Environmental chambers not using hazardous air pollutant (HAP) gases.
☒	22.	Equipment on the premises of industrial and manufacturing operations used solely for the purpose of preparing food for human consumption.
☐	23.	Equipment used exclusively to slaughter animals, but not including other equipment at slaughterhouses, such as rendering cookers, boilers, heating plants, incinerators, and electrical power generating equipment.
☒	24.	Equipment used for quality control/assurance or inspection purposes, including sampling equipment used to withdraw materials for analysis.
☒	25.	Equipment used for surface coating, painting, dipping or spray operations, except those that will emit VOC or HAP.
☒	26.	Fire suppression systems.
☒	27.	Firefighting equipment and the equipment used to train firefighters.
☒	28.	Flares used solely to indicate danger to the public.
☒	29.	Fugitive emission related to movement of passenger vehicle provided the emissions are not counted for applicability purposes and any required fugitive dust control plan or its equivalent is submitted.
☒	30.	Hand-held applicator equipment for hot melt adhesives with no VOC in the adhesive formulation.
☒	31.	Hand-held equipment for buffing, polishing, cutting, drilling, sawing, grinding, turning or machining wood, metal or plastic.
☐	32.	Humidity chambers.
☐	33.	Hydraulic and hydrostatic testing equipment.
☒	34.	Indoor or outdoor kerosene heaters.
☒	35.	Internal combustion engines used for landscaping purposes.
☐	36.	Laser trimmers using dust collection to prevent fugitive emissions.
☒	37.	Laundry activities, except for dry-cleaning and steam boilers.
☐	38.	Natural gas pressure regulator vents, excluding venting at oil and gas production facilities.
☒	39.	Oxygen scavenging (de-aeration) of water.
☐	40.	Ozone generators.
☒	41.	Plant maintenance and upkeep activities (e.g., grounds-keeping, general repairs, cleaning, painting, welding, plumbing, re-tarring roofs, installing insulation, and paving parking lots) provided these activities are not conducted as part of a manufacturing process, are not related to the source's primary business activity, and not otherwise triggering a permit modification. (Cleaning and painting activities qualify if they are not subject to VOC or HAP control requirements. Asphalt batch plant owners/operators must still get a permit if otherwise requested.)
☒	42.	Portable electrical generators that can be moved by hand from one location to another. "Moved by

24. Insignificant Activities (Check all that apply)		
		Hand" means that it can be moved without the assistance of any motorized or non-motorized vehicle, conveyance, or device.
☒	43.	Process water filtration systems and demineralizers.
☒	44.	Repair or maintenance shop activities not related to the source's primary business activity, not including emissions from surface coating or de-greasing (solvent metal cleaning) activities, and not otherwise triggering a permit modification.
☒	45.	Repairs or maintenance where no structural repairs are made and where no new air pollutant emitting facilities are installed or modified.
☒	46.	Routing calibration and maintenance of laboratory equipment or other analytical instruments.
☐	47.	Salt baths using nonvolatile salts that do not result in emissions of any regulated air pollutants. Shock chambers.
☐	48.	Shock chambers.
☐	49.	Solar simulators.
☒	50.	Space heaters operating by direct heat transfer.
☒	51.	Steam cleaning operations.
☒	52.	Steam leaks.
☒	53.	Steam sterilizers.
☒	54.	Steam vents and safety relief valves.
☒	55.	Storage tanks, reservoirs, and pumping and handling equipment of any size containing soaps, vegetable oil, grease, animal fat, and nonvolatile aqueous salt solutions, provided appropriate lids and covers are utilized.
☒	56.	Storage tanks, vessels, and containers holding or storing liquid substances that will not emit any VOC or HAP. Exemptions for storage tanks containing petroleum liquids or other volatile organic liquids should be based on size limits such as storage tank capacity and vapor pressure of liquids stored and are not appropriate for this list.
☐	57.	Such other sources or activities as the Director may determine.
☐	58.	Tobacco smoking rooms and areas.
☒	59.	Vents from continuous emissions monitors and other analyzers.

Section 5: Emission Units, Control Devices, and Emission Points

25. Equipment Table
Fill out the **Title V Equipment Table** and provide it as **ATTACHMENT D**.
26. Emission Units
For each emission unit listed in the **Title V Equipment Table**, fill out and provide an **Emission Unit Form** as **ATTACHMENT E**.
For each emission unit not in compliance with an applicable requirement, fill out a **Schedule of Compliance Form** as **ATTACHMENT F**.
27. Control Devices
For each control device listed in the **Title V Equipment Table**, fill out and provide an **Air Pollution Control Device Form** as **ATTACHMENT G**.
For any control device that is required on an emission unit in order to meet a standard or limitation for which the potential pre-control device emissions of an applicable regulated air pollutant is greater than or equal to the Title V Major Source Threshold Level, refer to the **Compliance Assurance Monitoring (CAM) Form(s)** for CAM applicability. Fill out and provide these forms, if applicable, for each Pollutant Specific Emission Unit (PSEU) as **ATTACHMENT H**.

Section 6: Certification of Information

28. Certification of Truth, Accuracy and Completeness and Certification of Compliance

*Note: This Certification must be signed by a responsible official. The **original**, signed in **blue ink**, must be submitted with the application. Applications without an **original** signed certification will be considered as incomplete.*

a. Certification of Truth, Accuracy and Completeness

I certify that I am a responsible official (as defined at 45CSR§30-2.38) and am accordingly authorized to make this submission on behalf of the owners or operators of the source described in this document and its attachments. I certify under penalty of law that I have personally examined and am familiar with the statements and information submitted in this document and all its attachments. Based on my inquiry of those individuals with primary responsibility for obtaining the information, I certify that the statements and information are to the best of my knowledge and belief true, accurate, and complete. I am aware that there are significant penalties for submitting false statements and information or omitting required statements and information, including the possibility of fine and/or imprisonment.

b. Compliance Certification

Except for requirements identified in the Title V Application for which compliance is not achieved, I, the undersigned hereby certify that, based on information and belief formed after reasonable inquiry, all air contaminant sources identified in this application are in compliance with all applicable requirements.

Responsible official (type or print)	
Name: Roger Shears	Title: Director, Fossil & Hydro

Responsible official's signature:

Signature: _____ Signature Date: 3-2-2016

(Must be signed and dated in blue ink)

Note: Please check all applicable attachments included with this permit application:	
☒	ATTACHMENT A: Area Map
☒	ATTACHMENT B: Plot Plan(s)
☒	ATTACHMENT C: Process Flow Diagram(s)
☒	ATTACHMENT D: Equipment Table
☒	ATTACHMENT E: Emission Unit Form(s)
☐	ATTACHMENT F: Schedule of Compliance Form(s)
☒	ATTACHMENT G: Air Pollution Control Device Form(s)
☒	ATTACHMENT H: Compliance Assurance Monitoring (CAM) Form(s)

All of the required forms and additional information can be found and downloaded from, the DEP website at www.wvdep.org/daq, requested by phone (304) 926-0475, and/or obtained through the mail.

ATTACHMENT A
FACILITY AREA MAP

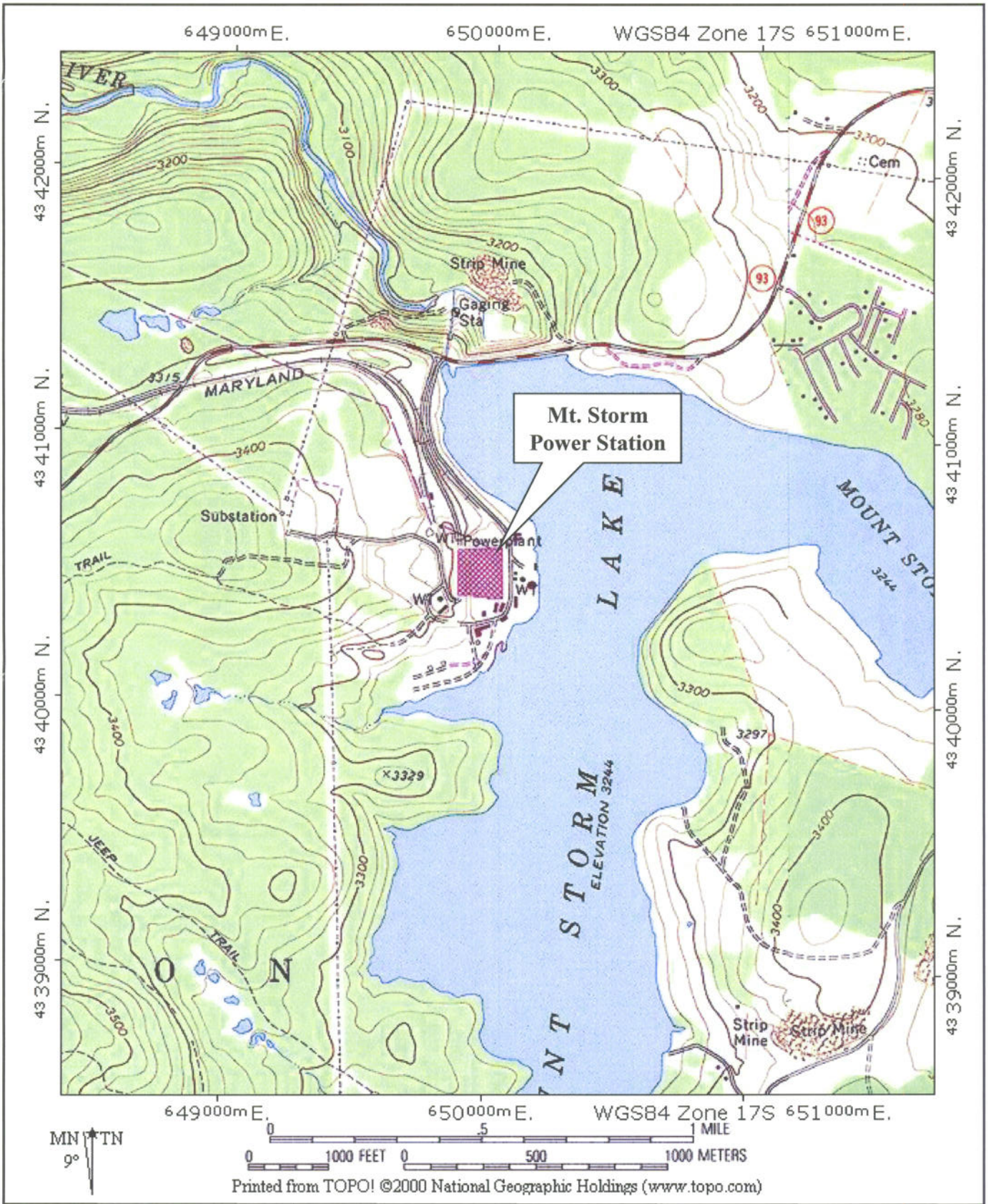

URS

5540 Falmouth Street, Suite 201
Richmond, Virginia 23230
PHONE: 804-965-9000 FAX: 804-965-9764

Diagram 1
Site Vicinity Map

Dominion Generation
Mt. Storm Power Station
Mt. Storm, West Virginia

Date: December 2003
Job Number: 49498-038-155

ATTACHMENT B
FACILITY PLOT PLAN

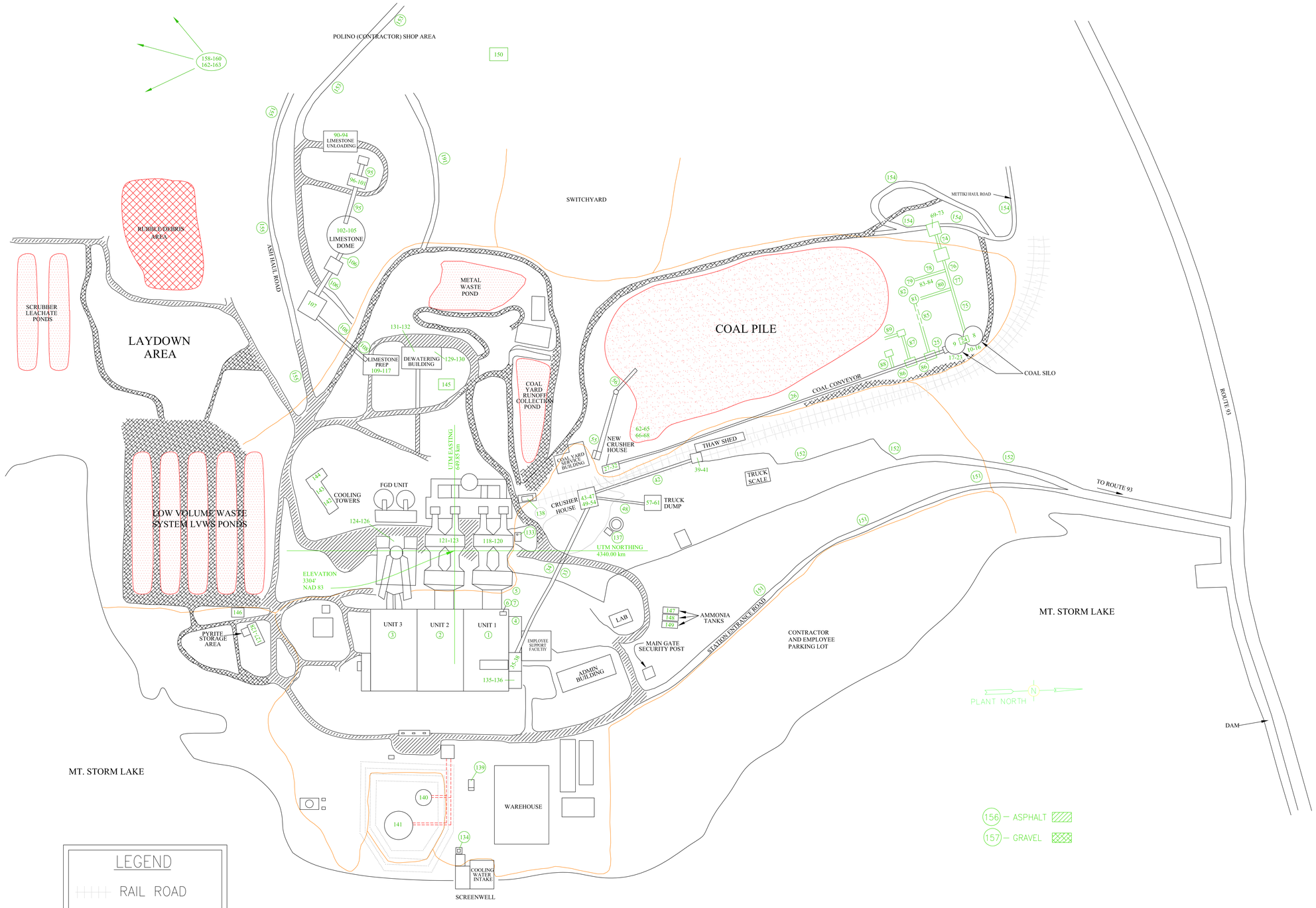

Unit Number	Emission Unit ID
1.	MTST-01-BLR-STG-1
2.	MTST-02-BLR-STG-1
3.	MTST-03-BLR-STG-1
4.	MTST-00-AB-STG-1
5.	MTST-C1-CTG-T-1
6.	MTST-00-EG-DG-1A
7.	MTST-00-EG-DG-1B
8.	MTST-00-CS-CYS-1
9.	MTST-00-CS-CYS-2
10.	MTST-00-CS-FDR-VB1
11.	MTST-00-CS-FDR-N1
12.	MTST-00-CS-FDR-N2
13.	MTST-00-CS-FDR-VB2
14.	MTST-00-CS-FDR-N3
15.	MTST-00-CS-FDR-N4
16.	MTST-00-CS-FDR-VB3
17.	MTST-00-CS-FDR-VB4
18.	MTST-00-CS-FDR-N5
19.	MTST-00-CS-FDR-N6
20.	MTST-00-CS-FDR-VB5
21.	MTST-00-CS-FDR-N7
22.	MTST-00-CS-FDR-N8
23.	MTST-00-CS-FDR-VB6
24.	MTST-00-CS-CNV-S2
25.	MTST-00-CS-CNV-P1
26.	MTST-00-CS-CNV-Q
27.	MTST-00-CS-CRH-4
28.	MTST-00-CS-CRH-5
29.	MTST-00-CS-CHT-C2BP
30.	MTST-00-CS-CHT-H2BP
31.	MTST-00-CS-CNV-C1
32.	MTST-00-CS-CNV-H1
33.	MTST-00-CS-CNV-C2
34.	MTST-00-CS-CNV-H2
35.	MTST-00-CS-FDR-D
36.	MTST-00-CS-CNV-D
37.	MTST-00-CS-FDR-J
38.	MTST-00-CS-CNV-J
39.	MTST-00-CS-UNL-1
40.	MTST-00-CS-FDR-A1
41.	MTST-00-CS-FDR-A2
42.	MTST-00-CS-CNV-B
43.	MTST-00-CS-CRH-2
44.	MTST-00-CS-FDR-M2
45.	MTST-00-CS-FDR-B
46.	MTST-00-CSS-CRH-B
47.	MTST-00-CSS-SM-B
48.	MTST-00-CS-CNV-G
49.	MTST-00-CS-CRH-3
50.	MTST-00-CS-FDR-M3
51.	MTST-00-CSS-FDR-G
52.	MTST-00-CSS-FDR-G1
53.	MTST-00-CSS-CRH-G
54.	MTST-00-CSS-SM-G
55.	MTST-00-CS-CNV-E
56.	MTST-00-CS-CNV-F
57.	MTST-00-BLD-CSD-2
58.	MTST-00-CS-FDR-VBG1
59.	MTST-00-CS-FDR-VBG2
60.	MTST-00-CS-FDR-VBG3
61.	MTST-00-CS-FDR-VBG4
62.	MTST-00-CS-FDR-VBC1
63.	MTST-00-CS-FDR-VBC2
64.	MTST-00-CS-FDR-VBC3
65.	MTST-00-CS-FDR-VBC4
66.	MTST-00-CS-FDR-VBH1
67.	MTST-00-CS-FDR-VBH2
68.	MTST-00-CS-FDR-VBH3
69.	MTST-00-BLD-
70.	MTST-00-CS-FDR-S1
71.	MTST-00-CS-FDR-S2
72.	MTST-00-CS-FDR-S3
73.	MTST-00-CS-FDR-S4
74.	MTST-00-CS-CNV-S1a
75.	MTST-00-CS-CNV-S1b
76.	MTST-00-CS-CNV-S3a
77.	MTST-00-CS-CNV-S4
78.	MTST-00-CS-CNV-S5
79.	OP-1
80.	MTST-00-CS-CNV-S6
81.	OP-2

Unit Number	Emission Unit ID
82.	BD-T7
83.	MTST-00-CS-FDR-1
84.	MTST-00-CS-FDR-2
85.	MTST-00-CS-CNV-T
86.	MTST-00-CS-CNV-P2
87.	C-SF-1
88.	C-SF-2
89.	MTST-00-CS-CNV-R
90.	MTST-00-BLD-LSUB-1
91.	MTST-00-SAR-HPR-1A
92.	MTST-00-SAR-HPR-1B
93.	MTST-00-SAR-FDR-1A
94.	MTST-00-SAR-FDR-1B
95.	MTST-00-SAR-CNV-A
96.	MTST-00-SAR-SM-1
97.	MTST-00-SAR-FDR-1
98.	MTST-00-SAR-CRH-2
99.	MTST-00-SAR-FDR-2
100.	MTST-00-SAR-SM-2
101.	MTST-00-SAR-CNV-D
102.	MTST-00-BLD-LS-D
103.	MTST-00-SAR-FDR-2A
104.	MTST-00-SAR-FDR-2B
105.	MTST-00-SAR-FDR-2C
106.	MTST-00-SAR-CNV-B
107.	MTST-00-SAR-CRH-1
108.	MTST-00-SAR-CNV-C
109.	MTST-00-SAR-CNV-1
110.	MTST-03-SAR-TK-1A
111.	MTST-03-SAR-TK-1B
112.	MTST-00-SAR-TK-1A
113.	MTST-00-SAR-TK-1B
114.	MTST-03-SAP-FDR-1A
115.	MTST-03-SAP-FDR-1B
116.	MTST-00-SAP-FDR-1A
117.	MTST-00-SAP-FDR-1B
118.	MTST-01-ID-STK-1
119.	MTST-01-ADF-MC-1A
120.	MTST-01-ADF-MC-1B
121.	MTST-02-ID-STK-1
122.	MTST-02-ADF-MC-1A
123.	MTST-02-ADF-MC-1B
124.	MTST-03-ID-STK-1
125.	MTST-03-ADF-MC-1A
126.	MTST-03-ADF-MC-1B
127.	MTST-00-ADB-TK-3
128.	MTST-00-ADB-MC-1
129.	MTST-00-SWD-M-FL-1A
130.	MTST-00-SWD-M-FL-1B
131.	MTST-03-SWD-M-FL-1A
132.	MTST-03-SWD-M-FL-1B
133.	MTST-00-FP-ENG-1
134.	MTST-00-FP-ENG-3
135.	MTST-00-LO-TK-3
136.	MTST-00-LO-TK-4
137.	MTST-00-FO-TK-4
138.	MTST-00-FO-TK-1
139.	MTST-00-FO-TK-6G
140.	MTST-00-IO-TK-1A
141.	MTST-00-IO-TK-1B
142.	1-CC-E-1A, 1-CC-E-1B, 1-CC-E-1C
143.	2-CC-E-1A, 2-CC-E-1B, 2-CC-E-1C
144.	3-CC-E-1A, 3-CC-E-1B
145.	MTST-03-OAS-TK-1C
146.	MTST-00-BLD-LTB-1
147.	MTST-00-AMS-TK-1
148.	MTST-00-AMS-TK-2
149.	MTST-00-AMS-TK-3
150.	PTK-1
151.	Asphalt Plant Entrance Road
152.	Concrete Coal Entrance Road
153.	Asphalt Limestone Haul Road
154.	Asphalt Mettiki Coal Entrance Road
155.	Asphalt Ash Haul Road
156.	Asphalt Plant Roads
157.	Gravel Plant Roads
158.	Gravel Ash Haul Road to Phase A
159.	Gravel Ash Haul Road to Phase B Entrance
160.	Bottom Ash Internal Phase B Haul Road
161.	Gravel Old Ash Haul Road
162.	Unloading of Ash Truck
163.	Unloading of FGD by-product trucks at landfill

LEGEND

RAIL ROAD

FACILITY SITE PLAN

APPROXIMATELY 1"=175'

SCALE

200 100 0 200 400

CONTROLLED DRAWING

ANY CHANGES MADE TO THIS SYSTEM SHALL BE DOCUMENTED AS NOTED IN FOSSIL AND HYDRO CONTROLS MANUAL SECTION 6.3.

REV	DATE	DSGN	DRWN	CHKD	DSGN SUPV	PROJ ENGR	CIVIL ENGR	ELEC ENGR	MECH ENGR	ARCH	E.M. ENGR	I&C ENGR
0	02–16 2010		TMD CBJ	EAW	RWM							

ORIGINAL ISSUE PER ENVIRONMENTAL ENGINEERING

DOMINION GENERATION

2010 TITLE V RENEWAL APPLICATION
PLOT PLAN
MOUNT STORM POWER STATION

DRAWING NO. MS–0–SP–STA–700

REV. 0

ATTACHMENT D
EMISSION UNIT TABLES

ATTACHMENT D - Emission Units Table

(includes all emission units at the facility except those designated as insignificant activities in Section 4, Item 24 of the General Forms)

Emission Unit ID[1]	Emission Point ID[1]	Emission Unit Description	Year Installed/ Modified	Design Capacity	Control Device[1]	Plot Plan Emission Unit number
MTST-01-BLR-STG-1	MS1/2	Unit 1 Boiler – (Combustion Engineering Model No. CCRRDP 60)	1965	5779 mmBtu/hr	ESP, FGDS, LNB, SCR	1
MTST-02-BLR-STG-1	MS1/2	Unit 2 Boiler – (Combustion Engineering Model No. CCRRDP 60)	1966	5779 mmBtu/hr	ESP, FGDS, LNB, SCR	2
MTST-03-BLR-STG-1	MS3	Unit 3 Boiler – (Combustion Engineering Model No. CCRD 66)	1973	5824 mmBtu/hr	ESP, FGDS, LNB, SCR	3
MTST-00-AB-STG-1	MS4	Auxiliary Boiler – (Babcock & Wilcox Serial No. FM2943)	1984	150 mmBtu/hr	N	4
MTST-C1-CTG-T-1	MS5	Combustion Turbine – (Pratt & Whitney Aircraft Division Model FT-4)	1967	230.2 mmBtu/hr	N	5
MTST-00-EG-DG-1A	MS6	Emergency Diesel Generator 1A	1963	4.38 mmBtu/hr	N	6
MTST-00-EG-DG-1B	MS6	Emergency Diesel Generator 1B	1963	4.38 mmBtu/hr	N	7
MTST-00-CS-CYS-1	MS7	Coal Silo # 1 (Transfer Point DP7 to feeders)	1972	10,000 Tons	FE	8
MTST-00-CS-CYS-2	MS7	Coal Silo # 2 (Transfer Point DP7 to feeders)	1972	10,000 Tons	FE	9
MTST-00-CS-FDR-VB1	MS7	Feeder From Silo #1 to Conveyor MTST-00-CS-CNV-P1 (Transfer Point DP8)	1996	400 TPH	FE	10
MTST-00-CS-FDR-N1	MS7	Feeder From Silo #1 to Conveyor MTST-00-CS-CNV-P1 (Transfer Point DP8)	1996	400 TPH	FE	11
MTST-00-CS-FDR-N2	MS7	Feeder From Silo #1 to Conveyor MTST-00-CS-CNV-P1 (Transfer Point DP8)	1996	400 TPH	FE	12
MTST-00-CS-FDR-VB2	MS7	Feeder From Silo #1 to Conveyor MTST-00-CS-CNV-P1 (Transfer Point DP8)	1996	400 TPH	FE	13
MTST-00-CS-FDR-N3	MS7	Feeder From Silo #1 to Conveyor MTST-00-CS-CNV-P1 (Transfer Point DP8)	1996	400 TPH	FE	14
MTST-00-CS-FDR-N4	MS7	Feeder From Silo #1 to Conveyor MTST-00-CS-CNV-P1 (Transfer Point DP8)	1996	400 TPH	FE	15

Emission Unit ID[1]	Emission Point ID[1]	Emission Unit Description	Year Installed/ Modified	Design Capacity	Control Device[1]	Plot Plan Emission Unit number
MTST-00-CS-FDR-VB3	MS7	Feeder From Silo #1 to Conveyor MTST-00-CS-CNV-P1 (Transfer Point DP8)	1996	400 TPH	FE	16
MTST-00-CS-FDR-VB4	MS7	Feeder From Silo #2 to Conveyor MTST-00-CS-CNV-P1 (Transfer Point DP8)	1996	400 TPH	FE	17
MTST-00-CS-FDR-N5	MS7	Feeder From Silo #2 to Conveyor MTST-00-CS-CNV-P1 (Transfer Point DP8)	1996	400 TPH	FE	18
MTST-00-CS-FDR-N6	MS7	Feeder From Silo #2 to Conveyor MTST-00-CS-CNV-P1 (Transfer Point DP8)	1996	400 TPH	FE	19
MTST-00-CS-FDR-VB5	MS7	Feeder From Silo #2 to Conveyor MTST-00-CS-CNV-P1 (Transfer Point DP8)	1996	400 TPH	FE	20
MTST-00-CS-FDR-N7	MS7	Feeder From Silo #2 to Conveyor MTST-00-CS-CNV-P1 (Transfer Point DP8)	1996	400 TPH	FE	21
MTST-00-CS-FDR-N8	MS7	Feeder From Silo #2 to Conveyor MTST-00-CS-CNV-P1 (Transfer Point DP8)	1996	400 TPH	FE	22
MTST-00-CS-FDR-VB6	MS7	Feeder From Silo #2 to Conveyor MTST-00-CS-CNV-P1 (Transfer Point DP8)	1996	400 TPH	FE	23
MTST-00-CS-CNV-S2	MS7	Coal Conveyor MTST-00-CS-CNV-S2 To Silo's MTST-00-CS-CYS-1 and 2 (Transfer Point DP6)	1996	1200 TPH	FE	24
MTST-00-CS-CNV-P1	MS8	Coal Conveyor from Silo Feeders to Transfer House MTST-00-BLD-CYTH-1	1972	1600 TPH	FE	25
MTST-00-CS-CNV-Q	MS9	Coal Conveyor from Transfer House to Primary Crushers MTST-00-CS-CRH-4 or MTST-00-CS-CRH-5 or By Pass Chutes MTST-00-CS-CHT-C2BP and H2BP	1972	1200 TPH	FE / WS	26
MTST-00-CS-CRH-4	MS10	Primary Crusher #4 to Conveyor MTST-00-CS-CNV-C2	1985	1200 TPH	FE	27
MTST-00-CS-CRH-5	MS10	Primary Crusher #5 to Conveyor MTST-00-CS-CNV-H2	1985	1200 TPH	FE	28
MTST-00-CS-CHT-C2BP	MS10	#4 Crusher By Pass Chute to MTST-00-CS-CNV-C2	1972	800 TPH	FE	29

Emission Unit ID[1]	Emission Point ID[1]	Emission Unit Description	Year Installed/ Modified	Design Capacity	Control Device[1]	Plot Plan Emission Unit number
MTST-00-CS-CHT-H2BP	MS10	#5 Crusher By Pass Chute to MTST-00-CS-CNV-H2	1972	800 TPH	FE	30
MTST-00-CS-CNV-C1	MS10	Reclaim Conveyor to Primary Crusher # 4	1985	1200 TPH	UG /FE	31
MTST-00-CS-CNV-H1	MS10	Reclaim Conveyor to Primary Crusher # 5	1985	1200 TPH	UG / FE	32
MTST-00-CS-CNV-C2	MS11	Coal Conveyor from Primary Crusher #4 to Conveyor MTST-00-CS-CNV-D	1985	1200 TPH	FE	33
MTST-00-CS-CNV-H2	MS11	Coal Conveyor from Primary Crusher #5 to Conveyor MTST-00-CS-CNV-J	1985	1200 TPH	FE	34
MTST-00-CS-FDR-D	MS12	Tripper Reject Feeder to Conveyor MTST-00-CS-CNV-D	1985	1200 TPH	FE	35
MTST-00-CS-CNV-D	MS12	Coal Conveyor to Units 1, 2, and 3 Bunkers	1985	1200 TPH	FE	36
MTST-00-CS-FDR-J	MS12	Tripper Reject Feeder to Conveyor MTST-00-CS-CNV-J	1985	1200 TPH	FE	37
MTST-00-CS-CNV-J	MS12	Coal Conveyor to Units 1, 2, and 3 Bunkers	1985	1200 TPH	FE	38
MTST-00-CS-UNL-1	MS13	Rail Car Dump	1964	1400 TPH	PE / WS	39
MTST-00-CS-FDR-A1	MS13	Feeder From Rail Car Dump to Conveyor MTST-00-CS-CNV-B	1964	700 TPH	UG	40
MTST-00-CS-FDR-A2	MS13	Feeder From Rail Car Dump to Conveyor MTST-00-CS-CNV-B	1964	700 TPH	UG	41
MTST-00-CS-CNV-B	MS14	Coal Conveyor to Crusher MTST-00-CS-CRH-2 or Conveyor MTST-00-CS-CNV-E and Sample System MTST-00-CSS-SM-B	1972	1400 TPH	UG / FE	42
MTST-00-CS-CRH-2	MS15	Coal Crusher #2 to Feeder MTST-00-CS-FDR-M2	1964	700 TPH	FE	43

Emission Unit ID[1]	Emission Point ID[1]	Emission Unit Description	Year Installed/ Modified	Design Capacity	Control Device[1]	Plot Plan Emission Unit number
MTST-00-CS-FDR-M2	MS15	Feeder From Crusher #2 to Conveyor MTST-00-CS-CNV-C2	1985	700 TPH	FE	44
MTST-00-CSS-FDR-B	MS15	Sample Feeder to Sample Crusher MTST-00-CSS-CRH-B	1985	<500,000 lbs/hr	FE	45
MTST-00-CSS-CRH-B	MS15	Coal Sample Crusher to Sampler MTST-00-CSS-SM-B	1985	<500,000 lbs/hr	FE	46
MTST-00-CSS-SM-B	MS15	Automatic Sampler to Sample Cans or Conveyor MTST-00-CS-CNV-E	1985	<500,000 lbs/hr	FE	47
MTST-00-CS-CNV-G	MS15	Conveyor to Crusher MTST-00-CS-CRH-3 and Feeder MTST-00-CSS-FDR-G	1985	700 TPH	UG / FE	48
MTST-00-CS-CRH-3	MS15	Crusher #3 to Feeder MTST-00-CS-FDR-M3	1964	800 TPH	FE	49
MTST-00-CS-FDR-M3	MS15	Feeder From Crusher #3 to Conveyors MTST-00-CS-CNV-E or MTST-00-CS-CNV-H2	1964	700 TPH	FE	50
MTST-00-CSS-FDR-G	MS15	Sample Feeder from MTST-00-CS-FDR-M3 to Sample Feeder MTST-00-CSS-FDR-G1	1985	<500,000 lbs/hr	FE	51
MTST-00-CSS-FDR-G1	MS15	Sample Feeder from MTST-00-CS-FDR-G to Sample Feeder MTST-00-CSS-FDR-G1	1985	<500,000 lbs/hr	FE	52
MTST-00-CSS-FDR-G1	MS15	Sample Feeder to Sample Crusher MTST-00-CSS-CRH-G	1985	<500,000 lbs/hr	FE	52
MTST-00-CSS-CRH-G	MS15	Sample Crusher to Automatic Sampler MTST-00-CSS-SM-G	1985	<500,000 lbs/hr	FE	53
MTST-00-CSS-SM-G	MS15	Automatic Sampler to Sample Cans or Conveyor MTST-00-CS-CNV-E	1985	<500,000 lbs/hr	FE	54
MTST-00-CS-CNV-E	MS16	Coal Conveyor to Stock Out Conveyor MTST-00-CS-CNV-F	1964	2100 TPH	FE	55
MTST-00-CS-CNV-F	MS17	Stock Out Conveyor to Coal Storage Pile	1964	2100 TPH	FE / WS	56
MTST-00-BLD-CSD-2	MS18	Coal Truck Dump	1964	700 TPH	N	57
MTST-00-CS-FDR-VBG1	MS18	Feeder From Truck Dump Hoppers to Conveyor MTST-00-CS-CNV-G	1985	175 TPH	UG	58

Emission Unit ID[1]	Emission Point ID[1]	Emission Unit Description	Year Installed/ Modified	Design Capacity	Control Device[1]	Plot Plan Emission Unit number
MTST-00-CS-FDR-VBG2	MS18	Feeder From Truck Dump Hoppers to Conveyor MTST-00-CS-CNV-G	1985	175 TPH	UG	59
MTST-00-CS-FDR-VBG3	MS18	Feeder From Truck Dump Hoppers to Conveyor MTST-00-CS-CNV-G	1985	175 TPH	UG	60
MTST-00-CS-FDR-VBG4	MS18	Feeder From Truck Dump Hoppers to Conveyor MTST-00-CS-CNV-G	1985	175 TPH	UG	61
MTST-00-CS-FDR-VBC1	MS19	Reclaim Feeder From Coal Pile to Conveyor MTST-00-CS-CNV-C1	1985	400 TPH	UG	62
MTST-00-CS-FDR-VBC2	MS19	Reclaim Feeder From Coal Pile to Conveyor MTST-00-CS-CNV-C1	1985	400 TPH	UG	63
MTST-00-CS-FDR-VBC3	MS19	Reclaim Feeder From Coal Pile to Conveyor MTST-00-CS-CNV-C1	1985	400 TPH	UG	64
MTST-00-CS-FDR-VBC4	MS19	Reclaim Feeder From Coal Pile to Conveyor MTST-00-CS-CNV-C1	1985	400 TPH	UG	65
MTST-00-CS-FDR-VBH1	MS20	Reclaim Feeder From Coal Pile to Conveyor MTST-00-CS-CNV-H1	1985	400 TPH	UG	66
MTST-00-CS-FDR-VBH2	MS20	Reclaim Feeder From Coal Pile to Conveyor MTST-00-CS-CNV-H1	1985	400 TPH	UG	67
MTST-00-CS-FDR-VBH3	MS20	Reclaim Feeder From Coal Pile to Conveyor MTST-00-CS-CNV-H1	1985	400 TPH	UG	68
MTST-00-BLD-	MS21	Mettiki Coal Truck Dump Enclosure (Transfer Point DP1)	1996	3,000,000 tpy (1200 TPH)	PE	69
MTST-00-CS-FDR-S1	MS21	Feeder From Truck to Conveyor MTST-00-CS-CNV-S1a (Transfer Point DP2)	1996	300 TPH	UG / FE	70
MTST-00-CS-FDR-S2	MS21	Feeder From Truck to Conveyor MTST-00-CS-CNV-S1a (Transfer Point DP2)	1996	300 TPH	UG / FE	71
MTST-00-CS-FDR-S3	MS21	Feeder From Truck to Conveyor MTST-00-CS-CNV-S1a (Transfer Point DP2)	1996	300 TPH	UG / FE	72
MTST-00-CS-FDR-S4	MS21	Feeder From Truck to Conveyor MTST-00-CS-CNV-S1a (Transfer Point DP2)	1996	300 TPH	UG / FE	73
MTST-00-CS-CNV-S1a	MS22	Conveyor Sla to Slb (Transfer Point T1)	1996	1200 TPH	UG / FE	74

Emission Unit ID[1]	Emission Point ID[1]	Emission Unit Description	Year Installed/ Modified	Design Capacity	Control Device[1]	Plot Plan Emission Unit number
MTST-00-CS-CNV-S1a	MS22	Existing Truck Dump to existing Silo Feed (S-1a) to existing Conveyor S1-b or New Transfer Conveyor S-3a	1996	1200 TPH	UG / FE	74
MTST-00-CS-CNV-S1b	MS23	Conveyor Slb to Conveyor S2 (Transfer Point DP5)	1996	1200 TPH	FE	75
MTST-00-CS-CNV-S3a	MS24	Transfer Conveyor S-3a to Radial Stacker S-5 or Transfer Conveyor S-4	2006	1200 TPH	PE	76
MTST-00-CS-CNV-S4	MS25	Transfer Conveyor S-4 to Radial Stacker S-6	2006	1200 TPH	PE	77
MTST-00-CS-CNV-S5	MS26	Radial Stacker S-5 to Open Pile (OP-1)	2006	1200 TPH	PE	78
OP-1	MS27	Fuel Storage Pile 1 from Radial Stacker S-5	2006	2,500,000 tpy (total for OP-1 and OP-2)	N	79
MTST-00-CS-CNV-S6	MS28	Radial Stacker S-6 to Open Pile (OP-2)	2006	1200 TPH	PE	80
OP-2	MS29	Fuel Storage Pile 2 from Radial Stacker S-6	2006	2,500,000 tpy (total for OP-1 and OP-2)	N	81
BD-T7	MS30	Bulldozer to Reclaim Feeders	2006	1200 TPH	UG	82
MTST-00-CS-FDR-1	MS31	Reclaim Feeder to Reclaim Coal Conveyor T	2006	1000 TPH	UG	83
MTST-00-CS-FDR-2	MS31	Reclaim Feeder to Reclaim Coal Conveyor T	2006	1000 TPH	UG	84
MTST-00-CS-CNV-T	MS32	Reclaim Conveyor T to Existing P-1 Conveyor	2006	1200 TPH	UG/PE	85
MTST-00-CS-CNV-P2	MS33	New Transfer on P-1 Conveyor to P-2 Conveyor	2006	1600 TPH	FE	86
C-SF-1	MS34	Conveyor SF-1	2005	1600 TPH	FE	87
C-SF-2	MS35	Conveyor SF-2	2005	1000 TPH	PE	88
MTST-00-CS-CNV-R	MS36	Conveyor MTST-00-CS-CNV-R	2005	1600 TPH	PE	89

Emission Unit ID[1]	Emission Point ID[1]	Emission Unit Description	Year Installed/ Modified	Design Capacity	Control Device[1]	Plot Plan Emission Unit number
MTST-00-BLD-LSUB-1	MS37	Limestone Truck Unloading Enclosure to Limestone Hoppers MTST-00-SAR-HPR-1A & 1B (2sa)	1994	N/A	PE / DC#3 (BH2ca)	90
MTST-00-SAR-HPR-1A	MS37	Limestone Hopper to Feeder MTST-FDR-1A	1994	300 Tons	FE / DC#3 (BH2ca)	91
MTST-00-SAR-HPR-1B	MS37	Limestone Hopper to Feeder MTST-FDR-1B	1994	300 Tons	FE / DC#3 (BH2ca)	92
MTST-00-SAR-FDR-1A	MS37	Limestone Unloading Feeder to Conveyor MTST-00-SAR-CNV-A	1994	600 TPH	FE / DC#3 (BH2ca)	93
MTST-00-SAR-FDR-1B	MS37	Limestone Unloading Feeder to Conveyor MTST-00-SAR-CNV-A	1994	600 TPH	FE / DC#3 (BH2ca)	94
MTST-00-SAR-CNV-A	MS38	Limestone Conveyor (4sa) from Unloading Feeders to Storage Dome and Sample System	1994	600 TPH	FE / DC#6 (BH3cb)	95
MTST-00-SAR-SM-1	MS39	Limestone Sampler to Feeder MSTS-00-SAR-FDR-1	1994	7 TPH	FE / DC#6 (BH3cb)	96
MTST-00-SAR-FDR-1	MS39	Limestone Sample System Primary Feeder to Sample Crusher MTST-00-SAR-CRH-2	1994	7 TPH	FE / DC#6 (BH3cb)	97
MTST-00-SAR-CRH-2	MS39	Limestone Sample Crusher (3sg)	1994	7 TPH	FE / DC#6 (BH3cb)	98
MTST-00-SAR-FDR-2	MS39	Limestone Sample System Secondary Feeder to Secondary Sampler 00-SAR-SM-2 and Conveyor MTST-00-SAR-CNV-D	1994	7 TPH	FE / DC#6 (BH3cb)	99
MTST-00-SAR-SM-2	MS39	Secondary Sampler to Sample Collector MTST-00-SAR-COL-1	1994	7 TPH	FE / DC#6 (BH3cb)	100
MTST-00-SAR-CNV-D	MS39	Bucket Conveyor (3se) Back to Conveyor MTST-00-SAR-CNV-A	1994	7 TPH	FE / DC#6 (BH3cb)	101
MTST-00-BLD-LS-D	MS40	Limestone Storage Dome (5sa)	1997	10,000 Tons	FE	102
MTST-00-SAR-FDR-2A	MS40	Limestone Reclaim Feeder to Conveyor MTST-00-SAR-CNV-B	1994	400 TPH	UG / DC#4 (BH6cc)	103
MTST-00-SAR-FDR-2B	MS40	Limestone Reclaim Feeder to Conveyor MTST-00-SAR-CNV-B	1994	400 TPH	UG / DC#4 (BH6cc)	104
MTST-00-SAR-FDR-2C	MS40	Limestone Reclaim Feeder to Conveyor MTST-00-SAR-CNV-B	1994	400 TPH	UG / DC#4 (BH6cc)	105

Emission Unit ID[1]	Emission Point ID[1]	Emission Unit Description	Year Installed/ Modified	Design Capacity	Control Device[1]	Plot Plan Emission Unit number
MTST-00-SAR-CNV-B	MS41	Limestone Conveyor (6sd) from Reclaim Feeders to Limestone Crusher MTST-00-SAR-CRH-1	1994	400 TPH	FE / DC#4 (BH6cc)	106
MTST-00-SAR-CRH-1	MS42	Limestone Crusher (7sb)to Conveyor MTST-00-SAR-CNV-C	1994	400 TPH	FE / DC#5 (BH7cc)	107
MTST-00 SAR-CNV-C	MS43	Limestone Conveyor from Crusher #1 to Shuttle Conveyor MTST-00-SAR-CNV-1	1994	400 TPH	FE / DC#5 (BH7cc)	108
MTST-00-SAR-CNV-1	MS44	Limestone Shuttle Conveyor (7sd) to Silo's MTST-03-SAR-TK-1A and 1B and MTST-00-SAR-TK-1A	2001	400 TPH	FE / DC#7 (BH8ce)	109
MTST-03-SAR-TK-1A	MS45	Limestone Storage Silo (8sa) to Weigh Feeder MTST-03-SAP-FDR-1A	1994	500 Tons	FE / DC#7 (BH8ce)	110
MTST-03-SAR-TK-1B	MS45	Limestone Storage Silo (8sb) to Weigh Feeder MTST-03-SAP-FDR-1B	1994	500 Tons	FE / DC#7 (BH8ce)	111
MTST-00-SAR-TK-1A	MS45	Limestone Storage Silo (8sc) to Weigh Feeder MTST-00-SAP-FDR-1A	2001	500 Tons	FE / DC#7 (BH8ce)	112
MTST-00-SAR-TK-1B	MS45	Limestone Storage Silo (8sd) to Weigh Feeder MTST-00-SAP-FDR-1B	2001	500 Tons	FE / DC#7 (BH8ce)	113
MTST-03-SAP-FDR-1A	MS45	Limestone Weigh Feeder to Ball Mill MTST-03-SAP-CRH-1A	1994	18 TPH	FE / DC#7 (BH8ce)	114
MTST-03-SAP-FDR-1B	MS45	Limestone Weigh Feeder to Ball Mill MTST-03-SAP-CRH-1B	1994	18 TPH	FE / DC#7 (BH8ce)	115
MTST-00-SAP-FDR-1A	MS45	Limestone Weigh Feeder to Ball Mill MTST-00-SAP-CRH-1A	2001	17 TPH	FE / DC#7 (BH8ce)	116
MTST-00-SAP-FDR-1B	MS45	Limestone Weigh Feeder to Ball Mill MTST-00-SAP-CRH-1B	2001	17 TPH	FE / DC#7 (BH8ce)	117
MTST-01-ID-STK-1	MS46	Unit 1 Fly Ash Storage Silo to Mixers MTST-01-ADF-MC-1A and 1B	1963	88,000 ft3	FE	118
MTST-01-ADF-MC-1A	MS47	Unit 1 Primary Fly Ash Mixer to Ash Haul Trucks	2003	400 TPH	PE	119
MTST-01-ADF-MC-1B	MS48	Unit 1 Secondary Fly Ash Mixer to Ash Haul Trucks	1975	400 TPH	PE	120
MTST-02-ID-STK-1	MS49	Unit 2 Fly Ash Storage Silo to Mixers MTST-02-ADF-MC-1A and 1B	1964	88,000 ft3	FE	121
MTST-02-ADF-MC-1A	MS50	Unit 2 Primary Fly Ash Mixer to Ash Haul Trucks	2003	400 TPH	PE	122

Emission Unit ID[1]	Emission Point ID[1]	Emission Unit Description	Year Installed/ Modified	Design Capacity	Control Device[1]	Plot Plan Emission Unit number
MTST-02-ADF-MC-1B	MS51	Unit 2 Secondary Fly Ash Mixer to Ash Haul Trucks	1975	300 TPH	PE	123
MTST-03-ID-STK-1	MS52	Unit 3 Fly Ash Storage Silo to Mixers MTST-03-ADF-MC-1A and 1B	1972	125,000 ft3	FE	124
MTST-03-ADF-MC-1A	MS53	Unit 3 Primary Fly Ash Mixer to Ash Haul Trucks	2003	400 TPH	PE	125
MTST-03-ADF-MC-1B	MS54	Unit 3 Secondary Fly Ash Mixer to Ash Haul Trucks	1972	400 TPH	PE	126
MTST-00-ADB-TK-3	MS55	Pyrite Storage Tank to Mixer MTST-00-ADB-MC-1	1982	1200 TPH	FE	127
MTST-00-ADB-MC-1	MS56	Pyrite Mixer to Ash Haul Trucks	1994	200 TPH	MC	128
MTST-00-SWD-M-FL-1A	MS57	Vacuum Filter to De-watering Building MTST-00-BLD-DW-1	2001	27 TPH	FE	129
MTST-00-SWD-M-FL-1B	MS57	Vacuum Filter to De-watering Building MTST-00-BLD-DW-1	2001	27 TPH	FE	130
MTST-03-SWD-M-FL-1A	MS58	Vacuum Filter to De-watering Building MTST-00-BLD-DW-1	1994	27 TPH	FE	131
MTST-03-SWD-M-FL-1B	MS58	Vacuum Filter to De-watering Building MTST-00-BLD-DW-1	1994	27 TPH	FE	132
MTST-00-FP-ENG-1	MS59	Diesel Fire Pump	1981	188 hp	N	133
MTST-00-FP-ENG-3	MS60	Diesel Fire Pump	1994	335.5 hp	N	134
MTST-00-LO-TK-3	MS61	Clean Oil Tank (Turbine Lube Oil)	1964	16,000 Gal.	N	135
MTST-00-LO-TK-4	MS62	Dirty Oil Tank (Turbine Lube Oil)	1964	16,000 Gal.	N	136
MTST-00-FO-TK-4	MS63	Jet Fuel Oil Tank for Combustion Turbine	1992	105,000 Gal.	N	137
MTST-00-FO-TK-1	MS64	Fuel Oil Tank for Locomotive	1964	25,000 Gal.	N	138
MTST-00-FO-TK-6G	MS65	Gasoline Tank-Unleaded	1995	5000 Gal.	FE	139

Emission Unit ID[1]	Emission Point ID[1]	Emission Unit Description	Year Installed/ Modified	Design Capacity	Control Device[1]	Plot Plan Emission Unit number
MTST-00-IO-TK-1A	MS66	Fuel Oil Tank 1A (#2 fuel oil)	1964	504,501 Gal.	N	140
MTST-00-IO-TK-1B	MS67	Fuel Oil Tank 1B (#2 fuel oil)	1973	1,541,526 Gal.	N	141
1-CC-E-1A, 1-CC-E-1B, 1-CC-E-1C	MS68	Cooling Tower (3 stacks)	1964	NA	ME	142
2-CC-E-1A, 2-CC-E-1B, 2-CC-E-1C	MS69	Cooling Tower (3 stacks)	1964	NA	ME	143
3-CC-E-1A, 3-CC-E-1B	MS70	Cooling Tower (2 stacks)	1973	NA	ME	144
MTST-03-OAS-TK-1C	MS71	Acid Tank – Organic for Scrubber	1993	43,183 Gal.	N	145
MTST-00-BLD-LTB-1	MS72	Lime Silo for Water Treatment Settling Pond	1973	4000 cu. ft.	BH	146
MTST-00-AMS-TK-1	MS73	Anhydrous Ammonia Tank	2001	45,000 Gal. Each	Deluge systems are use to suppress inadvertent NH3 releases.	147
MTST-00-AMS-TK-2	MS74	Anhydrous Ammonia Tank	2001	45,000 Gal. Each	Deluge systems are use to suppress inadvertent NH3 releases.	148
MTST-00-AMS-TK-3	MS75	Anhydrous Ammonia Tank	2001	45,000 Gal. Each	Deluge systems are use to suppress inadvertent NH3 releases.	149
PTK-1	MS76	Polino Diesel Fuel Tank	2002	12,000 gal	FE	150
RD-1	Fugitive	Asphalt Plant Entrance Road	1964	2216 Feet	P, PWT	151
RD-2	Fugitive	Concrete Coal Entrance Road	1964	1470 Feet	P, PWT	152
RD-3	Fugitive	Asphalt Limestone Haul Road	1994	6277 Feet	P, PWT	153
RD-4	Fugitive	Asphalt Mettiki Coal Entrance Road	1996	4932 Feet	P, PWT	154

Emission Unit ID[1]	Emission Point ID[1]	Emission Unit Description	Year Installed/ Modified	Design Capacity	Control Device[1]	Plot Plan Emission Unit number
RD-5	Fugitive	Asphalt Ash Haul Road	1994	6864 Feet	P, PWT	155
RD-6	Fugitive	Asphalt Plant Roads	1964 to 2004	10224 Feet	P, PWT	156
RD-7	Fugitive	Gravel Plant Roads	1964 / 1972	3518 Feet	PWT	157
RD-8	Fugitive	Gravel Ash Haul Road To Phase A	1994	3168 Feet	PWT	158
RD-9	Fugitive	Gravel Ash Haul Road To Phase B Entrance	1986	4224 Feet	PWT	159
RD-10	Fugitive	Bottom Ash Internal Phase B Haul Road	1995 to 2009	2112 Feet	PWT	160
RD-11	Fugitive	Gravel Old Ash Haul Road	1979	3325 Feet	PWT	161
AD-1	Fugitive	Unloading of ash haul trucks	1989	60 ton/truck	MC	162
FGD-1	Fugitive	Unloading of FGD Byproduct haul trucks	1994	35 ton/truck	MC	163

[1]For 45CSR13 permitted sources, the numbering system used for the emission points, control devices, and emission units should be consistent with the numbering system used in the 45CSR13 permit. For grandfathered sources, the numbering system should be consistent with registrations or emissions inventory previously submitted to DAQ. For emission points, control devices, and emissions units which have not been previously labeled, use the following 45CSR13 numbering system: 1S, 2S, 3S,... or other appropriate description for emission units; 1C, 2C, 3C,... or other appropriate designation for control devices; 1E, 2E, 3E, ... or other appropriate designation for emission points.

ATTACHMENT E
EMISSION UNIT FORMS

ATTACHMENT E

SOURCES FOR EMISSION POINT MS1/2 and MS3

UNIT 1 BOILER, UNIT 2 BOILER and UNIT 3 BOILER

(MTST-01-BLR-STG-1, MTST-02-BLR-STG-1, MTST-03-BLR-STG-1)

ATTACHMENT E - Emission Unit Form

Emission Unit Description

Emission unit ID number:	**Emission unit name:**	**List any control devices associated with this emission unit:**
MTST-01-BLR-STG-1 MTST-02-BLR-STG-1 MTST-03-BLR-STG-1	Sources for Emission Point MS1/2: MTST-01-BLR-STG-1 – Unit 1 Boiler MTST-02-BLR-STG-1 – Unit 2 Boiler Sources for Emission Point MS3: MTST-03-BLR-STG-1 – Unit 3 Boiler	Electrostatic Precipitators (ESP), Flue Gas Desulfurization Scrubber Absorber (FGDS), Low NOx Burners (LNB), Selective Catalytic Reduction (SCR)

Provide a description of the emission unit (type, method of operation, design parameters, etc.):
The Emission Units MTST-01-BLR-STG-1, MTST-02-BLR-STG-1, and MTST-03-BLR-STG-1 are the three main boilers at the Mt. Storm Power Station. All three units employ a tangential firing arrangement to burn pulverized coal. Unit 1 and Unit 2 have a design heat input of 5,779 mmBtu/hr. Unit 3 has a maximum design heat input of 5,824 mmBtu/Hr. Units 1 and 2 discharge to a common stack (MS1/2) whereas Unit 3 discharges to a dedicated stack (MS3).

Manufacturer:	**Model number:**	**Serial number:**
Combustion Engineering	Unit 1 and Unit 2 CCRRDP 60 Unit 3 CCRD 66	Unit 1 : Contract No. 1562 Unit 2 : Contract No. 1663 Unit 3 : Contract No. 8668
Construction date: MTST-01-BLR-STG-1 : 1965 MTST-02-BLR-STG-1 : 1966 MTST-03-BLR-STG-1 : 1973	**Installation date:** MTST-01-BLR-STG-1 : 1965 MTST-02-BLR-STG-1 : 1966 MTST-03-BLR-STG-1 : 1973	**Modification date(s):** N/A

Design Capacity (examples: furnaces - tons/hr, tanks - gallons):
Units 1 and 2 are designed to produce 3,785,000 lbs/hr of steam at a mawp of 2,520 psig and 1000°F.
Unit 3 is designed to produce 3,877,840 lbs/hr of steam at a mawp of 2,520 psig and 1000°F.

Maximum Hourly Throughput:	**Maximum Annual Throughput:**	**Maximum Operating Schedule:**
Units 1 & 2 - 3,785,000 lbs/hr of steam at a mawp of 2,520 psig and 1000°F. Unit 3 - 3,877,840 lbs/hr of steam at a mawp of 2,520 psig and 1000°F.	Units 1 & 2 – 3.31566 x $_{E}10$ lbs/yr of steam Unit 3- 3.39698784 x $_{E}10$ lbs/yr of steam	8760 hours

Fuel Usage Data **(fill out all applicable fields)**

Does this emission unit combust fuel? _x_ Yes ___ No	**If yes, is it?** ___ Indirect Fired _x_ Direct Fired
Maximum design heat input and/or maximum horsepower rating: The maximum design heat input for Units 1 & 2 is 5,779 mmBtu/hr. The rated boiler horsepower for Units 1 and 2 is 172,538 hp. The maximum design heat input for Unit 3 is 5,824 mmBtu/Hr. The rated boiler horsepower for Unit 3 is 173,883	**Type and Btu/hr rating of burners:** 48 coal tips / 8 oil guns for startup

List the primary fuel type(s) and if applicable, the secondary fuel type(s). For each fuel type listed, provide the maximum hourly and annual fuel usage for each.
The fuel for the Units 1, 2 and 3 is pulverized Bituminous coal. Boilers 1 and 2 consume fuel at a maximum hourly rate of 236 tons per hour. Thus, each boiler would have a maximum annual fuel usage of 2,067,360 tons based on 8760 hours of operation in a year. Unit 3 consumes fuel at a maximum hourly rate of 238 tons per hour. Thus, this boiler would have a maximum annual fuel usage of 2,084,880 tons based on 8760 hours of operation in a year.

Describe each fuel expected to be used during the term of the permit.

Fuel Type	Max. Sulfur Content	Max. Ash Content	BTU Value
Pulverized Bituminous coal and No. 2 Fuel Oil (for startup and flame stabilization)	varies	varies	varies

Emissions Data

Criteria Pollutants	Potential Emissions[1]	
	PPH	TPY
Carbon Monoxide (CO)	2600.55	11,277
Nitrogen Oxides (NO_X)	1,342.79	5,823
Lead (Pb)	0.04	0.19
Particulate Matter ($PM_{2.5}$)	N/A	N/A
Particulate Matter (PM_{10})	521.46	2,262
Total Particulate Matter (TSP)	869.10	3,779.34
Sulfur Dioxide (SO_2)	46,931.40	203,494.55
Volatile Organic Compounds (VOC)	42.56	184
Hazardous Air Pollutants	Potential Emissions	
	PPH	TPY
Mercury	0.00	0.002
Chromium	0.07	0.32
Manganese	0.09	0.31
Nickel	0.09	0.37
Hydrogen Chloride	42.56	184.58
Hydrogen Fluoride	5.32	23.07
Selenium	0.93	4
Cadmium	0.00	0.04
Arsenic	0.15	0.66
Beryllium	0.06	0.007
Regulated Pollutants other than Criteria and HAP	Potential Emissions	
	PPH	TPY

Sulfuric Acid Mist	73.39	318.12

[1]The Potential Emissions values that are recorded in PPH and TPY are for all three units burning coal only.

List the method(s) used to calculate the potential emissions (include dates of any stack tests conducted, versions of software used, source and dates of emission factors, etc.).

The above calculations are based on the following: TPY = current permit limits (lb/hr) x 8760 (hrs/year)/2000 (lbs/ton).
For Actual Emissions see Attachment I.

Applicable Requirements

List all applicable requirements for this emission unit. For each applicable requirement, include the underlying rule/regulation citation and/or construction permit with the condition number. (*Note: Title V permit condition numbers alone are not the underlying applicable requirements*). If an emission limit is calculated based on the type of source and design capacity or if a standard is based on a design parameter, this information should also be included.

Source-Specific Requirements
Thermal Decomposition Of Boiler Cleaning Solutions
The thermal decomposition of boiler cleaning solutions is permitted in accordance with the WVDAQ letter signed by Jesse D. Adkins and subject to DAQ notification requirements as outlined in the document titled "Dominion Generation Mt. Storm Power Station Boiler Chemical Cleaning Process Evaporation Notification Procedure." Dominion is required to store the spent cleaning solution in temporary (frac) tanks, test samples of the spent solution to verify the solution is non-hazardous, and notify the DAQ at least one (1) day prior to commencement of the thermal decomposition. Records pertaining to the thermal decomposition of boiler cleaning solutions shall be kept on site for a period of no less than five (5) years and shall be made available, in a suitable form for inspection, to the Secretary upon request.
[WVDAQ Letter signed by Jesse D. Adkins - State-Enforceable only]
(Title V condition 4.0.1)

Limitations and Standards

Any fuel burning unit(s) including associated air pollution control equipment, shall at all times, including periods of start-up, shutdowns, and malfunctions, to the extent practicable, be maintained and operated in a manner consistent with good air pollution control practice for minimizing emissions.
[45CSR§2-9.2.]
(Title V permit condition 4.1.1)

The addition of sulfur oxides to a combustion unit exit gas stream for the purpose of improving emissions control equipment is prohibited unless written approval for such addition is provided by the Secretary.
[45CSR§2-4.4.]
(Title V permit condition 4.1.2)

Visible Emissions from each Unit 1 & 2 stack (*MS1/2*) and Unit 3 stack (*MS3*) shall not exceed ten (10) percent opacity based on a six minute block average.
[45CSR§2-3.1.]
(Title V permit condition 4.1.3)

The visible emission standards shall apply at all times except in periods of start-ups, shutdowns and

malfunctions.
[45CSR§2-9.1.]
(Title V permit condition 4.1.4)

The combined total particulate matter emissions from Unit 1 & 2 stack (*MS1/2*) and Unit 3 stack (*MS3*) shall not exceed 866.85 lb/hr. The averaging time shall be a minimum of six (6) hours.
[45CSR§2-4.1.a., 45CSR2-Appendix §§ 4.1.b. & 4.1.c.]
(Title V permit condition 4.1.5)

The combined total sulfur dioxide emissions from Unit 1 & 2 stack (*MS1/2e*) and Unit 3 stack (*MS3e*) shall not exceed 46,931.4 lb/hr.
[45CSR§§10-3.1. & 3.1.d.]
(Title V permit condition 4.1.6)

Compliance with the allowable sulfur dioxide emission limitations from Unit 1 & 2 and Unit 3 boilers shall be based on a continuous twenty-four (24) hour averaging time. Emissions shall not be allowed to exceed the weight emissions standards for sulfur dioxide as set forth in 45CSR10 (*permit condition 4.1.6. above*), except during one (1) continuous twenty-four (24) hour period in each calendar month. During this one (1) continuous twenty-four hour period, emissions shall not be allowed to exceed such weight emission standards by more than ten percent (10%) without causing a violation of 45CSR10. A continuous twenty-four (24) hour period is defined as one (1) calendar day.
[45CSR§10-3.8.]
(Title V permit condition 4.1.7)

Rule 13/14 Permit

The carbon monoxide emission rates from Units 1 & 2 stack (*MS1/2*) shall not exceed 1733.7 lb/hr or 0.15 lb/mmBtu (based on a one hour average).
[45CSR13/14 - Permit No. R13-1661/R14-10-§(A)]
(Title V permit condition 4.1.8)

The carbon monoxide emission rates from Units 3 stack (MS3) shall not exceed 873.6 lb/hr or 0.15 lb/mmBtu (based on a one hour average)
[45CSR13/14 - Permit No. R13-1661/R14-10-§(A)]
(Title V permit condition 4.1.9)

_X__ Permit Shield

For all applicable requirements listed above, provide monitoring/testing/recordkeeping/reporting which shall be used to demonstrate compliance. If the method is based on a permit or rule, include the condition number or citation. (Note: Each requirement listed above must have an associated method of demonstrating compliance. If there is not already a required method in place, then a method must be proposed.)

Monitoring Requirements

Compliance with the visible emission requirements for stacks *MS1/2e* and *MS3e* shall be determined as outlined in section I.A.2. of the DAQ approved "45CSR2 Monitoring Plan" attached in Appendix B of this permit.
[45CSR§§2-3.2., 8.1.a & 8.2., 45CSR§2A-6]
(Title V permit condition 4.2.1)

The owner or operator shall install, calibrate, certify, operate, and maintain continuous monitoring systems that measure all SO_2, and NO_x, emissions from emission points *MS1/2e* and *MS3e* as specified in 40 C.F.R. Part 75. CO_2 emissions from emission points *MS1/2e* and *MS3e* shall be measured as specified in 40 C.F.R. Part 75.
[45CSR33, 40 C.F.R. § 75.10,]
(Title V permit condition 4.2.2)

Compliance with the operating and fuel usage requirements for Units 1, 2 and 3 shall be demonstrated as outlined in section I.A.3. and II.A.3. of the DAQ approved "45CSR2 Monitoring Plan" attached in Appendix B of this permit.
[45CSR§§2-8.3.c., 8.4.a. & 8.4.a.1.]
(Title V permit condition 4.2.3)

Testing Requirements

Stack testing. As per provisions set forth in this permit or as otherwise required by the Secretary, in accordance with the West Virginia Code, underlying regulations, permits and orders, the permittee shall conduct test(s) to determine compliance with the emission limitations set forth in this permit and/or established or set forth in underlying documents. The Secretary, or his duly authorized representative, may at his option witness or conduct such test(s). Should the Secretary exercise his option to conduct such test(s), the operator shall provide all necessary sampling connections and sampling ports to be located in such manner as the Secretary may require, power for test equipment and the required safety equipment, such as scaffolding, railings and ladders, to comply with generally accepted good safety practices. Such tests shall be conducted in accordance with the methods and procedures set forth in this permit or as otherwise approved or specified by the Secretary in accordance with the following:
a. The Secretary may on a source-specific basis approve or specify additional testing or alternative testing to the test methods specified in the permit for demonstrating compliance with 40 C.F.R. Parts 60, 61, and 63, if applicable, in accordance with the Secretary's delegated authority and any established equivalency determination methods which are applicable.
b. The Secretary may on a source-specific basis approve or specify additional testing or alternative testing to the test methods specified in the permit for demonstrating compliance with applicable requirements which do not involve federal delegation. In specifying or approving such alternative testing to the test methods, the Secretary, to the extent possible, shall utilize the same equivalency criteria as would be used in approving such changes under Section 3.3.1.a. of this permit.
c. All periodic tests to determine mass emission limits from or air pollutant concentrations in discharge stacks and such other tests as specified in this permit shall be conducted in accordance with an approved test protocol. Unless previously approved, such protocols shall be submitted to the Secretary in writing at least thirty (30) days prior to any testing and shall contain the information set forth by the Secretary. In addition, the permittee shall notify the Secretary at least fifteen (15) days prior to any testing so the Secretary may have the opportunity to observe such tests. This notification shall include the actual date and time during which the test will be conducted and, if appropriate, verification that the tests will fully conform to a referenced protocol previously approved by the Secretary.
[WV Code § 22-5-4(a)(15), 45CSR2, 45CSR10, 45CSR13 and 45CSR14]
(Title V permit condition 3.3.1)

The owner or operator shall conduct a test at least once every five (5) years to determine the compliance of Unit1, Unit 2 and Unit 3 Boilers with the carbon monoxide (CO) limits of conditions 4.1.8. and 4.1.9. Such tests shall be conducted in accordance with 40 CFR 60 Appendix A - Method 10. A compliance test shall be conducted no later than eighteen (18) months of the issuance date of this permit. An emission factor shall be determined from the test results and updated from the results of each subsequent test. The emission factor shall be used for compliance demonstration for periods between tests.
[45CSR§30-5.1.c.]
(Title V permit condition 4.3.1)

The owner or operator shall conduct, or shall have conducted, tests to determine the compliance of Unit 1, Unit2, and Unit 3 boilers particulate matter mass emission limitations. Such tests shall be conducted in accordance with the appropriate method set forth in 45CSR2 Appendix - Compliance Test Procedures for 45CSR2 or other equivalent EPA approved method approved by the Secretary. Such tests shall be conducted in accordance with the schedule set forth in the following table. The initial baseline compliance test was completed on March 1, 2002 and the test results were <50% of the weight emission standard. The testing frequency was therefore determined to be "Once /3 years." In accordance with the retest frequency, a test was completed on September 16, 2004 and resulted in mass emission rates <50% of the weight emission standard. Therefore, the current testing frequency is "Once/3 years." Subsequent testing shall be based on the schedule below.

Test	Test Results	Testing Frequency
Initial Baseline	≤50% of weight emission standard	Once/3 years
Initial Baseline	Between 50% and 80 % of weight emission standard	Once/2 years
Initial Baseline	≥80% of weight emission standard	Annual
Annual	After three successive tests indicate mass emission rates ≤50% of weight emission standard	Once/3 years
Annual	After two successive tests indicate mass emission rates between 50% and 80 % of weight emission standard	Once/2 years
Annual	Any tests indicates a mass emission rate ≥80% of weight emission standard	Annual
Once/2 years	After two successive tests indicate mass emission rates ≤50% of weight emission standard	Once/3 years
Once/2 years	Any tests indicates a mass emission rate between 50% and 80 % of weight emission standard	Once/2 years
Once/2 years	Any tests indicates a mass emission rate ≥80% of weight emission standard	Annual
Once/3 years	Any tests indicates a mass emission rate ≤50% of weight emission standard	Once/3 years
Once/3 years	Any test indicates mass emission rates between 50% and 80 % of weight emission standard	Once/2 years
Once/3 years	Any test indicates a mass emission rate ≥80% of weight emission standard	Annual

[45CSR§2-8.1., 45CSR§2A-5.2.]
(Title V permit condition 4.3.2)

Recordkeeping Requirements

Records of monitored data established in the monitoring plan (see Appendix B) shall be maintained on site and shall be made available to the Secretary or his duly authorized representative upon request.
[45CSR§2-8.3.a.]
(Title V permit condition 4.4.1)

Records of the operating schedule and the quantity and quality of fuel consumed in each fuel burning unit, shall be maintained on-site in a manner to be established by the Secretary and made available to the Secretary or his duly authorized representative upon request.
[45CSR§2-8.3.c.]
(Title V permit condition 4.4.2)

Reporting Requirements

The designated representative shall electronically report SO_2, NO_x, and CO_2 emissions data and information as specified in 40 C.F.R. § 75.64 to the Administrator of USEPA, quarterly. Each electronic report must be submitted within thirty (30) days following the end of each calendar quarter.
[45CSR33, 40 C.F.R. § 75.64]
(Title V permit condition 4.5.1)

A periodic exception report shall be submitted to the Secretary, in a manner and at a frequency to be established by the Secretary. Compliance with this periodic exception reporting requirement shall be demonstrated as outlined in sections I.A.5., I.C.4., II.A.4. and II.B.2. of the DAQ approved "45CSR2 Monitoring Plan" attached in Appendix B of this permit.
[45CSR§2-8.3.b.]
(Title V permit condition 4.5.2)

Excess opacity periods resulting from any malfunction of Unit 1, Unit 2, Unit 3 or Auxiliary boiler or their air pollution control equipment, meeting the following conditions, may be reported on a quarterly basis unless otherwise required by the Secretary:
a. The excess opacity period does not exceed thirty (30) minutes within any twenty-four (24) hour period; and

b. Excess opacity does not exceed forty percent (40%).
[45CSR§2-9.3.a.]
(Title V permit condition 4.5.3)

Except as provided in permit condition 4.5.3. above, the owner or operator shall report to the Secretary by telephone, telefax, or e-mail any malfunction of Unit 1, Unit 2, Unit 3 or Auxiliary boiler or their associated air pollution control equipment, which results in any excess particulate matter or excess opacity, by the end of the next business day after becoming aware of such condition. The owner or operator shall file a certified written report concerning the malfunction with the Secretary within thirty (30) days providing the following information:
a. A detailed explanation of the factors involved or causes of the malfunction;

b. The date, and time of duration (with starting and ending times) of the period of excess emissions;

c. An estimate of the mass of excess emissions discharged during the malfunction period;

d. The maximum opacity measured or observed during the malfunction;

e. Immediate remedial actions taken at the time of the malfunction to correct or mitigate the effects of the malfunction; and

f. A detailed explanation of the corrective measures or program that will be implemented to prevent a recurrence of the malfunction and a schedule for such implementation.
[45CSR§2-9.3.b.]

(Title V permit condition 4

Acid Rain Program

Unit 1, Unit 2 and Unit 3 are Phase II Acid Rain affected units under 45CSR33, as defined by 40 C.F.R § 72.6, and as such are required to meet the requirements of 40 C.F.R. Parts 72, 73, 74, 75, 76, 77 and 78. These requirements include, but are not limited to:

a. Hold an Acid Rain permit (Acid Rain Permit is included in Appendix C);

b. Hold allowances, as of the allowance transfer deadline, in the unit's compliance sub-account of not less than the total annual emissions of sulfur dioxide for the previous calendar year from the unit;

c. Comply with the applicable Acid Rain emissions for sulfur dioxide;

d. Comply with the applicable Acid Rain emissions for nitrogen oxides;

e. Comply with the monitoring requirements of 40 C.F.R. Part 75 and section 407 of the Clean Air Act of 1990 and regulations implementing section 407 of the Act;
f. Submit the reports and compliance certifications required under the Acid Rain Program, including those under 40 C.F.R. Part 72, Subpart I and 40 C.F.R. Part 75.
[45CSR33, 40 C.F.R. Parts 72, 73, 74, 75, 76, 77, 78.]
(Title V permit condition 4.5.5)

Are you in compliance with all applicable requirements for this emission unit? _x_ Yes

If no, complete the **Schedule of Compliance Form** as **ATTACHMENT F.**

ATTACHMENT E

SOURCES FOR EMISSION POINT MS4

AUXILIARY BOILER

(MTST-00-AB-STG-1)

ATTACHMENT E - Emission Unit Form

Emission Unit Description

Emission unit ID number:	**Emission unit name:**	**List any control devices associated with this emission unit:**
MTST-00-AB-STG-1	Sources for Emission Point MS4: MTST-00-AB-STG-1 – Auxiliary Boiler	None

Provide a description of the emission unit (type, method of operation, design parameters, etc.):
The Emission Unit MTST-00-AB-STG-1 is the Auxiliary Boiler at the Mt. Storm Power Station. The auxiliary boiler has a design heat input of 150 mmBtu/hr.

Manufacturer:	**Model number:**	**Serial number:**
Babcock & Wilcox		FM2943
Construction date:	**Installation date:**	**Modification date(s):**
1982	1984	N/A

Design Capacity (examples: furnaces - tons/hr, tanks - gallons):
The auxiliary boiler has a heat input design capacity of 150 mmBtu/hr and a steam flow of 105,000 lb/hr

Maximum Hourly Throughput:	**Maximum Annual Throughput:**	**Maximum Operating Schedule:**
1440 hours (based on permit limit)	1440 hours (based on permit limit)	8760 hours

Fuel Usage Data **(fill out all applicable fields)**

Does this emission unit combust fuel? _x_ Yes ___ No	**If yes, is it?** ___ Indirect Fired _x_ Direct Fired
Maximum design heat input and/or maximum horsepower rating: The auxiliary boiler has a heat input design capacity of 150 mmBtu/hr.	**Type and Btu/hr rating of burners:** Not Available

List the primary fuel type(s) and if applicable, the secondary fuel type(s). For each fuel type listed, provide the maximum hourly and annual fuel usage for each.
The fuel type for the auxiliary boiler is No. 2 Fuel oil.

Describe each fuel expected to be used during the term of the permit.

Fuel Type	Max. Sulfur Content	Max. Ash Content	BTU Value
No. 2 fuel oil	0.2	varies	18915

Emissions Data

Criteria Pollutants	Potential Emissions	
	PPH	TPY
Carbon Monoxide (CO)	5.36E+00	3.86E+00
Nitrogen Oxides (NO_X)	2.57E+01	1.85E+01
Lead (Pb)	1.35E-03	9.72E-04

Particulate Matter ($PM_{2.5}$)	N/A	N/A
Particulate Matter (PM_{10})	1.07E+00	7.71E-01
Total Particulate Matter (TSP)	1.35E+01	9.73E+00
Sulfur Dioxide (SO_2)	4.05E+02	2.92E+02
Volatile Organic Compounds (VOC)	2.14E-01	1.54E-01
Hazardous Air Pollutants	Potential Emissions	
	PPH	TPY
Mercury	4.50E-04	3.24E-04
Chromium	4.50E-04	3.24E-04
Manganese	9.00E-04	6.48E-04
Nickel	4.50E-04	3.24E-04
Selenium	2.25E-03	1.62E-03
Cadmium	4.50E-04	3.24E-04
Regulated Pollutants other than Criteria and HAP	Potential Emissions	
	PPH	TPY
Arsenic	6.00E-04	4.32E-04
Beryllium	4.50E-04	3.24E-04

List the method(s) used to calculate the potential emissions (include dates of any stack tests conducted, versions of software used, source and dates of emission factors, etc.).

The above calculations are based on the following: TPY = current permit limits (lb/hr) x 8760 (hrs/year).
For Actual Emissions see Attachment I.

Applicable Requirements

List all applicable requirements for this emission unit. For each applicable requirement, include the underlying rule/regulation citation and/or construction permit with the condition number. (*Note: Title V permit condition numbers alone are not the underlying applicable requirements*). If an emission limit is calculated based on the type of source and design capacity or if a standard is based on a design parameter, this information should also be included.

Limitations and Standards

Any fuel burning unit(s) including associated air pollution control equipment, shall at all times, including periods of start-up, shutdowns, and malfunctions, to the extent practicable, be maintained and operated in a manner consistent with good air pollution control practice for minimizing emissions.
[45CSR§2-9.2.]
(Title V permit condition 4.1.1)

The addition of sulfur oxides to a combustion unit exit gas stream for the purpose of improving emissions control equipment is prohibited unless written approval for such addition is provided by the Secretary.
[45CSR§2-4.4.]
(Title V permit condition 4.1.2)

Visible Emissions and Particulate Matter
Visible Emissions from the auxiliary boiler stack (*MS4e*) shall not exceed ten (10) percent opacity based on a six minute block average.
[45CSR§2-3.1.]
(Title V permit condition 4.1.10)

The visible emission standards shall apply at all times except in periods of start-ups, shutdowns and malfunctions.
[45CSR§2-9.1.]
(Title V permit condition 4.1.11)

Particulate matter emissions from the auxiliary boiler stack (*MS4e*) shall not exceed 13.5 lb/hr. The averaging time shall be a minimum of six (6) hours.
[45CSR§2-4.1.b., 45CSR2-Appendix §§ 4.1.b. & 4.1.c.]
(Title V permit condition 4.1.12)

Sulfur dioxide emissions from the auxiliary boiler stack (*MS4e*) shall not exceed 405 lb/hr.
[45CSR§§10-3.1. & 3.1.e.]
(Title V permit condition 4.1.13)

Compliance with the allowable sulfur dioxide emission limitations from the auxiliary boiler shall be based on a continuous twenty-four (24) hour averaging time. Emissions shall not be allowed to exceed the weight emissions standards for sulfur dioxide as set forth in 45CSR10 (*permit condition 4.1.13. above*), except during one (1) continuous twenty-four (24) hour period in each calendar month. During this one (1) continuous twenty-four hour period, emissions shall not be allowed to exceed such weight emission standards by more than ten percent (10%) without causing a violation of 45CSR10. A continuous twenty-four (24) hour period is defined as one (1) calendar day.
[45CSR§10-3.8.]
(Title V permit condition 4.1.14)

Rule 13 Permit
The auxiliary boiler fuel use must not exceed 1,543,520 gallons per year.
[45CSR13 - Permit No. R13-656]

(Title V permit condition 4.1.15)

The maximum percent sulfur in fuel oil shall not exceed 0.3.
[45CSR13 - Permit No. R13-656 Application Affected Source Sheet §2.B.(3)]
(Title V permit condition 4.1.16)

__X__ Permit Shield

For all applicable requirements listed above, provide monitoring/testing/recordkeeping/reporting which shall be used to demonstrate compliance. If the method is based on a permit or rule, include the condition number or citation. (Note: Each requirement listed above must have an associated method of demonstrating compliance. If there is not already a required method in place, then a method must be proposed.)

Monitoring Requirements

Compliance with the visible emission requirements for *MS4e* shall be determined as outlined in section I.C.2. of the DAQ approved "45CSR2 Monitoring Plan" attached in Appendix B of this permit.
[45CSR§§2-3.2. & 8.2., 45CSR§2A-6]
(Title V permit condition 4.2.4)

Compliance with the auxiliary boiler's (*MS4e*) particulate matter mass emission requirements and the operating and fuel usage requirements for the auxiliary boilers, shall be demonstrated as outlined in section I.C.3. of the DAQ approved "45CSR2 Monitoring Plan" attached in Appendix B of this permit.
[45CSR§§2-8.3.c., 8.4.a. & 8.4.a.1.]
(Title V permit condition 4.2.5)

Recordkeeping Requirements

Records of monitored data established in the monitoring plan (see Appendix B) shall be maintained on site and shall be made available to the Secretary or his duly authorized representative upon request.
[45CSR§2-8.3.a.]
(Title V permit Condition 4.4.1)

Records of the operating schedule and the quantity and quality of fuel consumed in each fuel burning unit, shall be maintained on-site in a manner to be established by the Secretary and made available to the Secretary or his duly authorized representative upon request.
[45CSR§2-8.3.c.]
(Title V permit condition 4.4.2)

Reporting Requirements

A periodic exception report shall be submitted to the Secretary, in a manner and at a frequency to be established by the Secretary. Compliance with this periodic exception reporting requirement shall be demonstrated as outlined in sections I.A.5., I.C.4., II.A.4. and II.B.2. of the DAQ approved "45CSR2 Monitoring Plan" attached in Appendix B of this permit.
[45CSR§2-8.3.b.]
(Title V permit condition 4.5.2)

Excess opacity periods resulting from any malfunction of Unit 1, Unit 2, Unit 3 or Auxiliary boiler or their air pollution control equipment, meeting the following conditions, may be reported on a quarterly basis unless otherwise required by the Secretary:
a. The excess opacity period does not exceed thirty (30) minutes within any twenty-four (24) hour period; and

b. Excess opacity does not exceed forty percent (40%).
[45CSR§2-9.3.a.]
(Title V permit condition 4.5.3)

Except as provided in permit condition 4.5.3. above, the owner or operator shall report to the Secretary by telephone, telefax, or e-mail any malfunction of Unit 1, Unit 2, Unit 3 or Auxiliary boiler or their associated air pollution control equipment, which results in any excess particulate matter or excess opacity, by the end of the next business day after becoming aware of such condition. The owner or operator shall file a certified written report concerning the malfunction with the Secretary within thirty (30) days providing the following information:

a. A detailed explanation of the factors involved or causes of the malfunction;

b. The date, and time of duration (with starting and ending times) of the period of excess emissions;

c. An estimate of the mass of excess emissions discharged during the malfunction period;

d. The maximum opacity measured or observed during the malfunction;

e. Immediate remedial actions taken at the time of the malfunction to correct or mitigate the effects of the malfunction; and

f. A detailed explanation of the corrective measures or program that will be implemented to prevent a recurrence of the malfunction and a schedule for such implementation.
[45CSR§2-9.3.b.]
(Title V permit condition 4.5.4)

Are you in compliance with all applicable requirements for this emission unit? _x_ Yes

If no, complete the **Schedule of Compliance Form** as **ATTACHMENT F.**

ATTACHMENT E

SOURCES FOR EMISSION POINT MS5

COMBUSTION TURBINE

(MTST-C1-CTG-T-1)

ATTACHMENT E - Emission Unit Form

Emission Unit Description

Emission unit ID number:	**Emission unit name:**	**List any control devices associated with this emission unit:**
MTST-C1-CTG-T-1	Sources for Emissions Point: MS5	None

Provide a description of the emission unit (type, method of operation, design parameters, etc.):
The Emission Unit MTST-C1-CTG-T-1 is a combustion turbine at Mt. Storm Power Station. The combustion turbine has a design heat input of 230.2 mmBtu/hr. There is a summer brake horsepower rating of 16080 and a winder brake horsepower rating of 21440

Manufacturer:	**Model number:**	**Serial number:**
Pratt & Whitney Aircraft Division	FT-4A-8LF	166188711 (Generator) P662081 (Gas Generator) 600052 (Free Turbine)
Construction date:	**Installation date:**	**Modification date(s):**
1967	1967 (Commercial Operation)	N/A

Design Capacity (examples: furnaces - tons/hr, tanks - gallons):
MTST-C1-CTG-T-1 has a design capacity of 230.2 mmBtu/hr.
CT- 2000 Gal/Hr (JP-1 Fuel)

Maximum Hourly Throughput:	**Maximum Annual Throughput:**	**Maximum Operating Schedule:**
2000 Gal/Hr	N/A	8760 hours

Fuel Usage Data **(fill out all applicable fields)**

Does this emission unit combust fuel? _x_ Yes ___ No	**If yes, is it?** ___ Indirect Fired _X_ Direct Fired
Maximum design heat input and/or maximum horsepower rating: MTST-C1-CTG-T-1 has a design capacity of 230.2 mmBtu/hr (2000 gal/hr @ 18400 BTU/lb)	**Type and Btu/hr rating of burners:** 8 burners- Can Annular

List the primary fuel type(s) and if applicable, the secondary fuel type(s). For each fuel type listed, provide the maximum hourly and annual fuel usage for each.

Jet Fuel, JP-1 (Kerosene) - 2000 gal/hr – 14,900.23 gal/hr

Describe each fuel expected to be used during the term of the permit.

Fuel Type	Max. Sulfur Content	Max. Ash Content	BTU Value
Jet Fuel, JP-1	1.0%	0.005%	18400

Emissions Data		
Criteria Pollutants	Potential Emissions	
	PPH	TPY
Carbon Monoxide (CO)	6.91E-02	3.02E-01
Nitrogen Oxides (NO_X)	2.03E+02	8.87E+02
Lead (Pb)	3.22E-03	1.41E-02
Particulate Matter ($PM_{2.5}$)	N/A	N/A
Particulate Matter (PM_{10})	2.76E+00	1.21E+01
Total Particulate Matter (TSP)	2.76E+00	1.21E+01
Sulfur Dioxide (SO_2)	6.98E+01	3.06E+02
Volatile Organic Compounds (VOC)	9.44E-02	4.13E-01
Hazardous Air Pollutants	Potential Emissions	
	PPH	TPY
Chromium	2.53E-03	1.11E-02
Manganese	1.82E-01	7.97E-01
Nickel	1.06E-03	4.64E-03
Mercury	2.76E-04	1.21E-03
Selenium	5.76E-04	2.52E-03
Cadmium	1.10E-03	4.84E-03
Regulated Pollutants other than Criteria and HAP	Potential Emissions	
	PPH	TPY
Arsenic	2.53E-03	1.11E-02
Beryllium	7.14E-05	3.13E-04

List the method(s) used to calculate the potential emissions (include dates of any stack tests conducted, versions of software used, source and dates of emission factors, etc.).

See Emission Calculations in Attachment I

Applicable Requirements

List all applicable requirements for this emission unit. For each applicable requirement, include the underlying rule/regulation citation and/or construction permit with the condition number. (*Note: Title V permit condition numbers alone are not the underlying applicable requirements*). If an emission limit is calculated based on the type of source and design capacity or if a standard is based on a design parameter, this information should also be included.

No emissions unit-specific applicable requirements for this source.

__X__ Permit Shield

For all applicable requirements listed above, provide monitoring/testing/recordkeeping/reporting which shall be used to demonstrate compliance. If the method is based on a permit or rule, include the condition number or citation. (Note: Each requirement listed above must have an associated method of demonstrating compliance. If there is not already a required method in place, then a method must be proposed.)

Records of monitored data established in the monitoring plan (see Appendix B) shall be maintained on site and shall be made available to the Secretary or his duly authorized representative upon request.
[45CSR§2-8.3.a.]
(Title V permit condition 4.4.1)

A periodic exception report shall be submitted to the Secretary, in a manner and at a frequency to be established by the Secretary. Compliance with this periodic exception reporting requirement shall be demonstrated as outlined in sections I.A.5., I.C.4., II.A.4. and II.B.2. of the DAQ approved "45CSR2 Monitoring Plan" attached in Appendix B of this permit.
[45CSR§2-8.3.b.]
(Title V permit condition 4.5.2)

Are you in compliance with all applicable requirements for this emission unit? Yes

If no, complete the **Schedule of Compliance Form** as **ATTACHMENT F.**

ATTACHMENT E

SOURCES FOR EMISSION POINT MS6

EMERGENCY DIESEL GENERATOR 1A AND 1B

(MTST-00-EG-DG-1A, MTST-00-EG-DG-1B)

ATTACHMENT E - Emission Unit Form

Emission Unit Description

Emission unit ID number:	**Emission unit name:**	**List any control devices associated with this emission unit:**
MTST-00-EG-DG-1A MTST-00-EG-DG-1B	Sources for Emissions Point: MS6 Emergency Diesel Generator 1A and 1B	None

Provide a description of the emission unit (type, method of operation, design parameters, etc.):
The Emission Units MTST-00-EG-DG-1A and MTST-00-EG-DG-1B are the emergency diesel generators (1A and 1B) at Mt. Storm Power Station. The emergency diesel generators have a design heat input rating of 6.2 mmBtu/hr and a brake horsepower rating of 536.

Manufacturer:	**Model number:**	**Serial number:**
General Motors / Delco	7163-7000	Not Available
Construction date:	**Installation date:**	**Modification date(s):**
1963	1963	N/A

Design Capacity (examples: furnaces - tons/hr, tanks - gallons):
Fuel consumption at full load is 31.3 gph of #2 diesel fuel. MTST-00-EG-DG-1A and MTST-00-EG-DG-1B have a design heat input rating of 4.38 mmBtu/hr.

Maximum Hourly Throughput:	**Maximum Annual Throughput:**	**Maximum Operating Schedule:**
31.3 gph	N/A	500 hours

Fuel Usage Data **(fill out all applicable fields)**

Does this emission unit combust fuel? _x_ Yes ___ No	**If yes, is it?** ___ Indirect Fired _X_ Direct Fired
Maximum design heat input and/or maximum horsepower rating: The emergency diesel generators have a design heat input rating of 4.38 mmBtu/hr.	**Type and Btu/hr rating of burners:** N/A

List the primary fuel type(s) and if applicable, the secondary fuel type(s). For each fuel type listed, provide the maximum hourly and annual fuel usage for each.

No. 2 Diesel Fuel

Describe each fuel expected to be used during the term of the permit.

Fuel Type	Max. Sulfur Content	Max. Ash Content	BTU Value
No. 2 Diesel Fuel	N/A	N/A	N/A

Emissions Data		
Criteria Pollutants	Potential Emissions	
	PPH	TPY
Carbon Monoxide (CO)	3.72E+00	9.31E-01
Nitrogen Oxides (NO_X)	1.40E+01	3.5E+00
Lead (Pb)	N/A	N/A
Particulate Matter ($PM_{2.5}$)	N/A	N/A
Particulate Matter (PM_{10})	2.13E-01	5.32E-02
Total Particulate Matter (TSP)	4.29E-01	1.07E-01
Sulfur Dioxide (SO_2)	8.85E-01	2.21E-01
Volatile Organic Compounds (VOC)	3.60E-01	8.99E-02
Hazardous Air Pollutants	Potential Emissions	
	PPH	TPY
Regulated Pollutants other than Criteria and HAP	Potential Emissions	
	PPH	TPY

List the method(s) used to calculate the potential emissions (include dates of any stack tests conducted, versions of software used, source and dates of emission factors, etc.).

See Emission Calculations in Attachment I

Applicable Requirements

List all applicable requirements for this emission unit. For each applicable requirement, include the underlying rule/regulation citation and/or construction permit with the condition number. (*Note: Title V permit condition numbers alone are not the underlying applicable requirements*). If an emission limit is calculated based on the type of source and design capacity or if a standard is based on a design parameter, this information should also be included.

No emissions unit-specific applicable requirements for this source.

__X__ Permit Shield

For all applicable requirements listed above, provide monitoring/testing/recordkeeping/reporting which shall be used to demonstrate compliance. If the method is based on a permit or rule, include the condition number or citation. (Note: Each requirement listed above must have an associated method of demonstrating compliance. If there is not already a required method in place, then a method must be proposed.)

No emissions unit-specific applicable requirements for this source.

Are you in compliance with all applicable requirements for this emission unit? Yes

If no, complete the **Schedule of Compliance Form** as **ATTACHMENT F.**

For all applicable requirements listed above, provide monitoring/testing/recordkeeping/reporting which shall be used to demonstrate compliance. If the method is based on a permit or rule, include the condition number or citation. (Note: Each requirement listed above must have an associated method of demonstrating compliance. If there is not already a required method in place, then a method must be proposed.)

For the purposes of determining compliance with Section 5.1.1, the permittee shall monitor the total amount of coal transferred through both truck dumps at the Coal Truck Unloading Facility.
[45CSR13, R13-2034, 4.2.1.]
(Title V permit condition 5.2.1)

For the purposes of determining compliance with Section 5.1.1, the permittee shall maintain certified records of the total amount of coal transferred through both truck dumps at the Coal Truck Unloading Facility, as per Attachments A and B.
[45CSR13, R13-2034, 4.4.4.]
(Title V permit condition 5.4.1)

Record of Maintenance of Air Pollution Control Equipment. For all pollution control equipment listed in Section 5.1.2, the permittee shall maintain accurate records of all required pollution control equipment inspection and/or preventative maintenance procedures.
[45CSR13, R13-2034, 4.4.2.]
(Title V permit condition 5.4.3)

Record of Malfunctions of Air Pollution Control Equipment. For all air pollution control equipment listed in Section 5.1.2, the permittee shall maintain records of the occurrence and duration of any malfunction or operational shutdown of the air pollution control equipment during which excess emissions occur. For each such case, the following information shall be recorded:
a. The equipment involved.
b. Steps taken to minimize emissions during the event.
c. The duration of the event.
d. The estimated increase in emissions during the event.
For each such case associated with an equipment malfunction, the additional information shall also be recorded:
e. The cause of the malfunction.
f. Steps taken to correct the malfunction.
g. Any changes or modifications to equipment or procedures that would help prevent future recurrences of the malfunction.
[45CSR13, R13-2034, 4.4.3.]
(Title V permit condition 5.4.4)

Are you in compliance with all applicable requirements for this emission unit? _X_ Yes ___ No

If no, complete the **Schedule of Compliance Form** as **ATTACHMENT F.**

ATTACHMENT E

SOURCES FOR EMISSION POINT MS7

COAL SILO, FEEDER & COAL CONVEYOR

(MTST-00-CS-CYS-1, MTST-00-CS-CYS-2, MTST-00-CS-FDR-VB1, MTST-00-CS-FDR-N1, MTST-00-CS-FDR-N2, MTST-00-CS-FDR-VB2, MTST-00-CS-FDR-N3, MTST-00-CS-FDR-N4, MTST-00-CS-FDR-VB3, MTST-00-CS-FDR-VB4, MTST-00-CS-FDR-N5, MTST-00-CS-FDR-N6, MTST-00-CS-FDR-VB5, MTST-00-CS-FDR-N7, MTST-00-CS-FDR-N8, MTST-00-CS-FDR-VB6, MTST-00-CS-CNV-S2)

ATTACHMENT E - Emission Unit Form

Emission Unit Description

Emission unit ID number:	Emission unit name:	List any control devices associated with this emission unit:
MTST-00-CS-CYS-1	Sources for Emission Point MS7	MTST-00-CS-CYS-1 - FE
MTST-00-CS-CYS-2		MTST-00-CS-CYS-2 - FE
MTST-00-CS-FDR-VB1		MTST-00-CS-FDR-VB1 - FE
MTST-00-CS-FDR-N1		MTST-00-CS-FDR-N1 - FE
MTST-00-CS-FDR-N2		MTST-00-CS-FDR-N2 - FE
MTST-00-CS-FDR-VB2		MTST-00-CS-FDR-VB2 - FE
MTST-00-CS-FDR-N3		MTST-00-CS-FDR-N3 - FE
MTST-00-CS-FDR-N4		MTST-00-CS-FDR-N4 - FE
MTST-00-CS-FDR-VB3		MTST-00-CS-FDR-VB3 - FE
MTST-00-CS-FDR-VB4		MTST-00-CS-FDR-VB4 - FE
MTST-00-CS-FDR-N5		MTST-00-CS-FDR-N5 - FE
MTST-00-CS-FDR-N6		MTST-00-CS-FDR-N6 - FE
MTST-00-CS-FDR-VB5		MTST-00-CS-FDR-VB5 - FE
MTST-00-CS-FDR-N7		MTST-00-CS-FDR-N7 - FE
MTST-00-CS-FDR-N8		MTST-00-CS-FDR-N8 - FE
MTST-00-CS-FDR-VB6		MTST-00-CS-FDR-VB6 - FE
MTST-00-CS-CNV-S2		MTST-00-CS-CNV-S2 - FE

Provide a description of the emission unit (type, method of operation, design parameters, etc.):
MTST-00-CS-CYS-1: Coal Silo #1

MTST-00-CS-CYS-2: Coal Silo #2

MTST-00-CS-FDR-VB1: Feeder from Silo #1 to Conveyor MTST-00-CS-CNV-P1

MTST-00-CS-FDR-N1: Feeder from Silo #1 to Conveyor MTST-00-CS-CNV-P1

MTST-00-CS-FDR-N2: Feeder from Silo #1 to Conveyor MTST-00-CS-CNV-P1

MTST-00-CS-FDR-VB2: Feeder from Silo #1 to Conveyor MTST-00-CS-CNV-P1

MTST-00-CS-FDR-N3: Feeder from Silo #1 to Conveyor MTST-00-CS-CNV-P1

MTST-00-CS-FDR-N4: Feeder from Silo #1 to Conveyor MTST-00-CS-CNV-P1

MTST-00-CS-FDR-VB3: Feeder from Silo #1 to Conveyor MTST-00-CS-CNV-P1

MTST-00-CS-FDR-VB4: Feeder from Silo #2 to Conveyor MTST-00-CS-CNV-P1

MTST-00-CS-FDR-N5: Feeder from Silo #2 to Conveyor MTST-00-CS-CNV-P1

MTST-00-CS-FDR-N6: Feeder from Silo #2 to Conveyor MTST-00-CS-CNV-P1

MTST-00-CS-FDR-VB5: Feeder from Silo #2 to Conveyor MTST-00-CS-CNV-P1

MTST-00-CS-FDR-N7: Feeder from Silo #2 to Conveyor MTST-00-CS-CNV-P1

MTST-00-CS-FDR-N8: Feeder from Silo #2 to Conveyor MTST-00-CS-CNV-P1

MTST-00-CS-FDR-VB6: Feeder from Silo #2 to Conveyor MTST-00-CS-CNV-P1

MTST-00-CS-CNV-S2: Coal Conveyor MTST-00-CS-CNV-S2 to Silo's CTST-00-CS-CYS-1 and 2

Manufacturer:	**Model number:**	**Serial number:**
MTST-00-CS-CYS-1: N/A	MTST-00-CS-CYS-1: N/A	MTST-00-CS-CYS-1: N/A
MTST-00-CS-CYS-2: N/A	MTST-00-CS-CYS-2: N/A	MTST-00-CS-CYS-2: N/A
MTST-00-CS-FDR-VB1: Sedgman (2006)	MTST-00-CS-FDR-VB1: 2023-0801	MTST-00-CS-FDR-VB1:2023-0801
MTST-00-CS-FDR-N1: N/A	MTST-00-CS-FDR-N1: N/A	MTST-00-CS-FDR-N1: N/A
MTST-00-CS-FDR-N2: N/A	MTST-00-CS-FDR-N2: N/A	MTST-00-CS-FDR-N2: N/A
MTST-00-CS-FDR-VB2: Sedgman (2006)	MTST-00-CS-FDR-VB2: 2023-0801	MTST-00-CS-FDR-VB2: 2023-0801
MTST-00-CS-FDR-N3: N/A	MTST-00-CS-FDR-N3: N/A	MTST-00-CS-FDR-N3: N/A
MTST-00-CS-FDR-N4: N/A	MTST-00-CS-FDR-N4: N/A	MTST-00-CS-FDR-N4: N/A
MTST-00-CS-FDR-VB3: Sedgman (2006)	MTST-00-CS-FDR-VB3:2023-0801	MTST-00-CS-FDR-VB3: 2023-0801
MTST-00-CS-FDR-VB4: Sedgman (2006)	MTST-00-CS-FDR-VB4: 2023-0801	MTST-00-CS-FDR-VB4: 2023-0801
MTST-00-CS-FDR-N5: N/A	MTST-00-CS-FDR-N5: N/A	MTST-00-CS-FDR-N5: N/A
MTST-00-CS-FDR-N6: N/A	MTST-00-CS-FDR-N6: N/A	MTST-00-CS-FDR-N6: N/A
MTST-00-CS-FDR-VB5: Sedgman (2006)	MTST-00-CS-FDR-VB5: 2023-0801	MTST-00-CS-FDR-VB5: 2023-0801
MTST-00-CS-FDR-N7: N/A	MTST-00-CS-FDR-N7: N/A	MTST-00-CS-FDR-N7: N/A
	MTST-00-CS-FDR-N8: N/A	MTST-00-CS-FDR-N8: N/A
	MTST-00-CS-FDR-VB6: 2023-0801	MTST-00-CS-FDR-VB6:2023-0801
	MTST-00-CS-CNV-S2: N/A	MTST-00-CS-CNV-S2: N/A

MTST-00-CS-FDR-N8: N/A MTST-00-CS-FDR-VB6: Sedgman (2006) MTST-00-CS-CNV-S2: N/A		
Construction date: MTST-00-CS-CYS-1: 1972 MTST-00-CS-CYS-2: 1972 MTST-00-CS-FDR-VB1: 1996 MTST-00-CS-FDR-N1: 1996 MTST-00-CS-FDR-N2: 1996 MTST-00-CS-FDR-VB2: 1996 MTST-00-CS-FDR-N3: 1996 MTST-00-CS-FDR-N4: 1996 MTST-00-CS-FDR-VB3: 1996 MTST-00-CS-FDR-VB4: 1996 MTST-00-CS-FDR-N5: 1996 MTST-00-CS-FDR-N6: 1996 MTST-00-CS-FDR-VB5: 1996 MTST-00-CS-FDR-N7: 1996 MTST-00-CS-FDR-N8: 1996 MTST-00-CS-FDR-VB6: 1996 MTST-00-CS-CNV-S2: 1996	**Installation date:** MTST-00-CS-CYS-1: 1972 MTST-00-CS-CYS-2: 1972 MTST-00-CS-FDR-VB1: 1996 MTST-00-CS-FDR-N1: 1996 MTST-00-CS-FDR-N2: 1996 MTST-00-CS-FDR-VB2: 1996 MTST-00-CS-FDR-N3: 1996 MTST-00-CS-FDR-N4: 1996 MTST-00-CS-FDR-VB3: 1996 MTST-00-CS-FDR-VB4: 1996 MTST-00-CS-FDR-N5: 1996 MTST-00-CS-FDR-N6: 1996 MTST-00-CS-FDR-VB5: 1996 MTST-00-CS-FDR-N7: 1996 MTST-00-CS-FDR-N8: 1996 MTST-00-CS-FDR-VB6: 1996 MTST-00-CS-CNV-S2: 1996	**Modification date(s):** MTST-00-CS-CYS-1: 2006 MTST-00-CS-CYS-2: 2006 MTST-00-CS-FDR-VB1: 2006 MTST-00-CS-FDR-N1: 2006 MTST-00-CS-FDR-N2: 2006 MTST-00-CS-FDR-VB2: 2006 MTST-00-CS-FDR-N3: 2006 MTST-00-CS-FDR-N4: 2006 MTST-00-CS-FDR-VB3: 2006 MTST-00-CS-FDR-VB4: 2006 MTST-00-CS-FDR-N5: 2006 MTST-00-CS-FDR-N6: 2006 MTST-00-CS-FDR-VB5: 2006 MTST-00-CS-FDR-N7: 2006 MTST-00-CS-FDR-N8: 2006 MTST-00-CS-FDR-VB6: 2006 MTST-00-CS-CNV-S2: 2006
Design Capacity (examples: furnaces - tons/hr, tanks - gallons): MTST-00-CS-CYS-1: 10,000 Ton MTST-00-CS-CYS-2: 10,000 Ton MTST-00-CS-FDR-VB1: 400 TPH MTST-00-CS-FDR-N1: 400 TPH MTST-00-CS-FDR-N2: 400 TPH MTST-00-CS-FDR-VB2: 400 TPH MTST-00-CS-FDR-N3: 400 TPH MTST-00-CS-FDR-N4: 400 TPH MTST-00-CS-FDR-VB3: 400 TPH MTST-00-CS-FDR-VB4: 400 TPH MTST-00-CS-FDR-N5: 400 TPH MTST-00-CS-FDR-N6: 400 TPH MTST-00-CS-FDR-VB5: 400 TPH MTST-00-CS-FDR-N7: 400 TPH MTST-00-CS-FDR-N8: 400 TPH		

MTST-00-CS-FDR-VB6: 400 TPH

MTST-00-CS-CNV-S2: 1200 TPH

Maximum Hourly Throughput:	**Maximum Annual Throughput:**	**Maximum Operating Schedule:**
MTST-00-CS-CYS-1: 1200 TPH	MTST-00-CS-CYS-1: 3,000,000 TPY	MTST-00-CS-CYS-1: 8760 HPY
MTST-00-CS-CYS-2: 1200 TPH	MTST-00-CS-CYS-2: 3,000,000 TPY	MTST-00-CS-CYS-2: 8760 HPY
MTST-00-CS-FDR-VB1: 400 TPH	MTST-00-CS-FDR-VB1: 3,000,000 TPY	MTST-00-CS-FDR-VB1: 8760 HPY
MTST-00-CS-FDR-N1: 400 TPH	MTST-00-CS-FDR-N1: 3,000,000 TPY	MTST-00-CS-FDR-N1: 8760 HPY
MTST-00-CS-FDR-N2: 400 TPH	MTST-00-CS-FDR-N2: 3,000,000 TPY	MTST-00-CS-FDR-N2: 8760 HPY
MTST-00-CS-FDR-VB2: 400 TPH	MTST-00-CS-FDR-VB2: 3,000,000 TPY	MTST-00-CS-FDR-VB2: 8760 HPY
MTST-00-CS-FDR-N3: 400 TPH	MTST-00-CS-FDR-N3: 3,000,000 TPY	MTST-00-CS-FDR-N3: 8760 HPY
MTST-00-CS-FDR-N4: 400 TPH	MTST-00-CS-FDR-N4: 3,000,000 TPY	MTST-00-CS-FDR-N4: 8760 HPY
MTST-00-CS-FDR-VB3: 400 TPH	MTST-00-CS-FDR-VB3: 3,000,000 TPY	MTST-00-CS-FDR-VB3: 8760 HPY
MTST-00-CS-FDR-VB4: 400 TPH	MTST-00-CS-FDR-VB4: 3,000,000 TPY	MTST-00-CS-FDR-VB4: 8760 HPY
MTST-00-CS-FDR-N5: 400 TPH	MTST-00-CS-FDR-N5: 3,000,000 TPY	MTST-00-CS-FDR-N5: 8760 HPY
MTST-00-CS-FDR-N6: 400 TPH	MTST-00-CS-FDR-N6: 3,000,000 TPY	MTST-00-CS-FDR-N6: 8760 HPY
MTST-00-CS-FDR-VB5: 400 TPH	MTST-00-CS-FDR-VB5: 3,000,000 TPY	MTST-00-CS-FDR-VB5: 8760 HPY
MTST-00-CS-FDR-N7: 400 TPH	MTST-00-CS-FDR-N7: 3,000,000 TPY	MTST-00-CS-FDR-N7: 8760 HPY
MTST-00-CS-FDR-N8: 400 TPH	MTST-00-CS-FDR-N8: 3,000,000 TPY	MTST-00-CS-FDR-N8: 8760 HPY
MTST-00-CS-FDR-VB6: 400 TPH	MTST-00-CS-FDR-VB6: 3,000,000 TPY	MTST-00-CS-FDR-VB6: 8760 HPY
MTST-00-CS-CNV-S2: 1200 TPH	MTST-00-CS-CNV-S2: 3,000,000 TPY	MTST-00-CS-CNV-S2: 8760 HPY

Fuel Usage Data **(fill out all applicable fields) NOT APPLICABLE**

Does this emission unit combust fuel? ___Yes _X__ No	**If yes, is it?** ___ Indirect Fired ___Direct Fired
Maximum design heat input and/or maximum horsepower rating: N/A	**Type and Btu/hr rating of burners:** N/A

List the primary fuel type(s) and if applicable, the secondary fuel type(s). For each fuel type listed, provide the maximum hourly and annual fuel usage for each.
N/A

Describe each fuel expected to be used during the term of the permit.

Fuel Type	Max. Sulfur Content	Max. Ash Content	BTU Value
N/A	N/A	N/A	N/A

Emissions Data

Criteria Pollutants	Potential Emissions	
	PPH	TPY
Carbon Monoxide (CO)	N/A	N/A
Nitrogen Oxides (NO_X)	N/A	N/A
Lead (Pb)	N/A	N/A
Particulate Matter ($PM_{2.5}$)	N/A	N/A
Particulate Matter (PM_{10})	0.04	0.12
Total Particulate Matter (TSP)	0.08	0.26
Sulfur Dioxide (SO_2)	N/A	N/A
Volatile Organic Compounds (VOC)	N/A	N/A

Hazardous Air Pollutants	Potential Emissions	
	PPH	TPY
	N/A	N/A

Regulated Pollutants other than Criteria and HAP	Potential Emissions	
	PPH	TPY
	N/A	N/A

List the method(s) used to calculate the potential emissions (include dates of any stack tests conducted, versions of software used, source and dates of emission factors, etc.).
See Emission Calculation s in Attachment I

Applicable Requirements

List all applicable requirements for this emission unit. For each applicable requirement, include the underlying rule/regulation citation and/or construction permit with the condition number. (*Note: Title V permit condition numbers alone are not the underlying applicable requirements*). If an emission limit is calculated based on the type of source and design capacity or if a standard is based on a design parameter, this information should also be included.

The maximum throughput of the Coal Truck Unloading Facility, originally constructed in 1996, shall not exceed 1,200 TPH and 3,000,000 TPY. The Facility shall consist of the two truck dumps (MTST-00-BLD), four collection bins, four vibratory feeders (MTST-00-CS-FDR-S1, 2, 3, & 4), a tube style reclaim conveyor (MTST-00-CS-CNV-S1a, MTST-00-CS-CNV-S1b), a transfer conveyor (MTST-00-CS-CNV-S2), existing Silo #1 (MTST-00-CS-CYS-1), existing Silo #2 (MTST-00-CS-CYS-2), existing belt feeders (MTST-00-CS-FDRVB1, 2, 3, 4, 5, & 6 and MTST-00-CS-FDR-N1, 2, 3, 4, 5, & 6), and existing conveyor "P" (MTST-00-CSCNV-P-1, MTST-00-CS-CNV-P-2).
[45CSR13, R13-2034, 4.1.1.]
(Title V permit condition 5.1.1)

In accordance with the information filed in Permit Application R13-2034, the following methods of controlling particulate matter emissions from the transfer points shall be installed, maintained, and operated so as to minimize emissions:

Transfer Point ID No.	Transfer Point Description	Method of Controls
DP1	Coal Trucks dumping to Collection Bins	Windbreaks 6 feet high with sheet metal walls extending up from the windbreaks and tying into a removable truss type roof.
DP2	Vibrating Feeders to Conveyor S-1a	Transfer point is fully enclosed and is also located underground.
DP5	Conveyor S-1b to Conveyor S-2	Transfer point is fully enclosed and is located inside a full enclosure at the top of the silo.
DP6	Conveyor S-2 to Silo	Transfer point inside a fully enclosed silo
DP7	Silos to Belt Feeders	Transfer point is fully enclosed and is located inside a fully enclosed silo.
DP8	Belt Feeders to Conveyor P-1	Transfer point is fully enclosed and is located inside a full enclosure underneath the silos.
T1	Existing Truck Dump to existing Silo Feed (S-1a) to existing Conveyor S1-b or New Transfer Conveyor S-3a	Full Enclosure
T2	Transfer Conveyor S-3a to Radial Stacker S-5 or Transfer Conveyor S-4	Partial Enclosure
T3	Transfer Conveyor S-4 to Radial Stacker S-6	Partial Enclosure
T4	Radial Stacker S-5 or Radial Stacker S-6 to Pile	Partial Enclosure
T7	Bulldozer to New Reclaim Hoppers	Transfer point is located and controlled underground

T8	New Reclaim Hoppers to New Reclaim Coal Conveyor T	Underground
T9	New Reclaim Conveyor T to Existing P-1 Conveyor	Partial Enclosure / Underground
T10	New Transfer on P-1 Conveyor to P-2 Conveyor	Full Enclosure
T11	Transfer Conveyor C-SF-1 with associated transfer house	Partial Enclosure
T12	Transfer Conveyor C-SF-2 with associated transfer house	Partial Enclosure
T13	Raw Coal Stock Out Conveyor "R" (MTST-00-CS-CNV-R) with associated transfer house	Partial Enclosure

[45CSR§30-12.7., 45CSR13, R13-2034, 1.0.]
(Title V permit condition 5.1.2)

At all times except during periods of startup, shutdown, and malfunctions the visible emissions shall not exceed twenty percent (20%) opacity from the following equipment: coal conveyors, MTST-00-CS-CNV-R, -Q, -C2, -D, -H2, -J, -G, -C1, -H1, -S1a, S1b, -S3a, & -S2, the primary crushers MTST-00-CS-CRH-4 & -5, and the sample crushers MTST-00-CSS-CRH-B. In determining compliance with the particulate matter standard for opacity, Method 9 and the procedures in 40 C.F.R. § 60.11 shall be employed.
[45CSR16, 40 C.F.R. § 60.11 (c), 40 C.F.R. § 60.252 (c)]
(Title V permit condition 5.1.9)

At all times, including periods of startup, shutdown, and malfunction, any affected facility [coal equipment as listed in Section 5.1.9.] including associated air pollution control equipment shall, to the extent practicable, be maintained and operated in a manner consistent with good air pollution control practice for minimizing emissions. Determination that acceptable operating and maintenance procedures are being used, will be based on information available to the Secretary which may include, but is not limited to, monitoring results, opacity observations, review of operating and maintenance procedures, and inspection of the source.
[45CSR16, 40 C.F.R. § 60.11 (d)]
(Title V permit condition 5.1.10)

Operation and Maintenance of Air Pollution Control Equipment. The permittee shall, to the extent practicable, install, maintain, and operate all pollution control equipment listed in Section 5.1.2 and associated monitoring equipment in a manner consistent with safety and good air pollution control practices for minimizing emissions, or comply with any more stringent limits set forth in this permit or as set forth by any State rule, Federal regulation, or alternative control plan approved by the Secretary.
[45CSR13, R13-2034, 4.1.8.]
(Title V permit condition 5.1.11)

The permitted facility shall be constructed and operated in accordance with the plans and specifications filed in Permit Applications R13-2034, R13-2034A, R13-2034B, R13-2034C, and any modifications, administrative updates, or amendments thereto. The Secretary may suspend or revoke a permit if the plans and specifications upon which the approval was based are not adhered to.
[45CSR13, R13-2034, 2.5.1.]
(Title V permit condition 5.1.12)

__X__ Permit Shield

For all applicable requirements listed above, provide monitoring/testing/recordkeeping/reporting which shall be used to demonstrate compliance. If the method is based on a permit or rule, include the condition number or citation. (Note: Each requirement listed above must have an associated method of demonstrating compliance. If there is not already a required method in place, then a method must be proposed.)

For the purposes of determining compliance with Section 5.1.1, the permittee shall monitor the total amount of coal transferred through both truck dumps at the Coal Truck Unloading Facility.
[45CSR13, R13-2034, 4.2.1.]
(Title V permit condition 5.2.1)

The emission points (i.e., enclosure openings as applicable) from the coal equipment as listed in Section 5.1. 9 shall be observed visually by an individual trained (not necessarily certified) per Method 22 at least each calendar month during periods of normal facility operation for a sufficient time interval to determine if any visible emissions are present. If visible emissions are observed for three (3) consecutive monthly observations, Method 9 tests (requires a certified observer) shall be conducted on those emission points having visible emissions within 48 hours or as soon as practicable from the last Method 22-like observation revealing visible emissions. The Method 9 tests shall be conducted during periods of normal facility operation. If any Method 9 test indicates opacity greater than 80% of the allowable visible emission requirement, Method 9 tests shall be conducted each calendar month for those emission points exceeding 80%. If any Method 9 test indicates opacity less than or equal to 80% of the allowable limit, the monthly Method 22-like observations may resume as previously described.
[45CSR§30-5.1.c.]
(Title V permit condition 5.3.1)

For the purposes of determining compliance with Section 5.1.1, the permittee shall maintain certified records of the total amount of coal transferred through both truck dumps at the Coal Truck Unloading Facility, as per Attachments A and B.
[45CSR13, R13-2034, 4.4.4.]
(Title V permit condition 5.4.1)

A record of each visible emissions observation as required in Section 5.3.1. shall be maintained, including any data required by 40 C.F.R. 60 Appendix A, Method 22 or Method 9, whichever is appropriate. The record shall include, at a minimum, the date, time, name of the emission unit, the applicable visible emissions requirement, the results of the observation, and the name of the observer.
[45CSR§30-5.1.c.]
(Title V permit condition 5.4.2)

Record of Maintenance of Air Pollution Control Equipment. For all pollution control equipment listed in Section 5.1.2, the permittee shall maintain accurate records of all required pollution control equipment inspection and/or preventative maintenance procedures.
[45CSR13, R13-2034, 4.4.2.]
(Title V permit condition 5.4.3)

Record of Malfunctions of Air Pollution Control Equipment. For all air pollution control equipment listed in Section 5.1.2, the permittee shall maintain records of the occurrence and duration of any malfunction or operational shutdown of the air pollution control equipment during which excess emissions occur. For each such case, the following information shall be recorded:
a. The equipment involved.
b. Steps taken to minimize emissions during the event.
c. The duration of the event.
d. The estimated increase in emissions during the event.
For each such case associated with an equipment malfunction, the additional information shall also be recorded:
e. The cause of the malfunction.
f. Steps taken to correct the malfunction.
g. Any changes or modifications to equipment or procedures that would help prevent future recurrences of the malfunction.
[45CSR13, R13-2034, 4.4.3.]

(Title V permit condition 5.4.4)

Are you in compliance with all applicable requirements for this emission unit? _X_ Yes ___ No

If no, complete the **Schedule of Compliance Form** as **ATTACHMENT F.**

ATTACHMENT E

SOURCES FOR EMISSION POINT MS8

COAL CONVEYOR

(MTST-00-CS-CNV-P1)

ATTACHMENT E - Emission Unit Form

Emission Unit Description

Emission unit ID number:	**Emission unit name:**	**List any control devices associated with this emission unit:**
MTST-00-CS-CNV-P1	Source for Emission point MS8	Full Enclosure

Provide a description of the emission unit (type, method of operation, design parameters, etc.):
Conveyor that collects coal from the silo discharge feeders as well as MTST-00-CS-CNV-T. MTST-00-CS-CNV-P1 feeds conveyor MTST-00-CS-CNV-P2.

Manufacturer:	**Model number:**	**Serial number:**
Sedgman	2023-0901	2023-0901
Construction date:	**Installation date:**	**Modification date(s):**
1972	1972	2006

Design Capacity (examples: furnaces - tons/hr, tanks - gallons): 1600 TPH

Maximum Hourly Throughput:	**Maximum Annual Throughput:**	**Maximum Operating Schedule:**
1600 TPH	3,000,000 TPY	8760 HPY

Fuel Usage Data **(fill out all applicable fields) NOT APPLICABLE**

Does this emission unit combust fuel? ___Yes __X_ No	**If yes, is it?** ___ Indirect Fired ___Direct Fired
Maximum design heat input and/or maximum horsepower rating: N/A	**Type and Btu/hr rating of burners:** N/A

List the primary fuel type(s) and if applicable, the secondary fuel type(s). For each fuel type listed, provide the maximum hourly and annual fuel usage for each.
N/A

Describe each fuel expected to be used during the term of the permit.

Fuel Type	Max. Sulfur Content	Max. Ash Content	BTU Value
N/A	N/A	N/A	N/A

Emissions Data		
Criteria Pollutants	Potential Emissions	
	PPH	TPY
Carbon Monoxide (CO)	N/A	N/A
Nitrogen Oxides (NO_X)	N/A	N/A
Lead (Pb)	N/A	N/A
Particulate Matter ($PM_{2.5}$)	N/A	N/A
Particulate Matter (PM_{10})	0.01	0.01
Total Particulate Matter (TSP)	0.01	0.02
Sulfur Dioxide (SO_2)	N/A	N/A
Volatile Organic Compounds (VOC)	N/A	N/A
Hazardous Air Pollutants	Potential Emissions	
	PPH	TPY
	N/A	N/A
Regulated Pollutants other than Criteria and HAP	Potential Emissions	
	PPH	TPY
	N/A	N/A

List the method(s) used to calculate the potential emissions (include dates of any stack tests conducted, versions of software used, source and dates of emission factors, etc.).

See Emission Calculations in Attachment I

Applicable Requirements

List all applicable requirements for this emission unit. For each applicable requirement, include the underlying rule/regulation citation and/or construction permit with the condition number. (*Note: Title V permit condition numbers alone are not the underlying applicable requirements*). If an emission limit is calculated based on the type of source and design capacity or if a standard is based on a design parameter, this information should also be included.

The maximum throughput of the Coal Truck Unloading Facility, originally constructed in 1996, shall not exceed 1,200 TPH and 3,000,000 TPY. The Facility shall consist of the two truck dumps (MTST-00-BLD), four collection bins, four vibratory feeders (MTST-00-CS-FDR-S1, 2, 3, & 4), a tube style reclaim conveyor (MTST-00-CS-CNV-S1a, MTST-00-CS-CNV-S1b), a transfer conveyor (MTST-00-CS-CNV-S2), existing Silo #1 (MTST-00-CS-CYS-1), existing Silo #2 (MTST-00-CS-CYS-2), existing belt feeders (MTST-00-CS-FDRVB1, 2, 3, 4, 5, & 6 and MTST-00-CS-FDR-N1, 2, 3, 4, 5, & 6), and existing conveyor "P" (MTST-00-CSCNV-P-1, MTST-00-CS-CNV-P-2).
[45CSR13, R13-2034, 4.1.1.]
(Title V permit condition 5.1.1)

In accordance with the information filed in Permit Application R13-2034, the following methods of controlling particulate matter emissions from the transfer points shall be installed, maintained, and operated so as to minimize emissions:

Transfer Point ID No.	Transfer Point Description	Method of Controls
DP1	Coal Trucks dumping to Collection Bins	Windbreaks 6 feet high with sheet metal walls extending up from the windbreaks and tying into a removable truss type roof.
DP2	Vibrating Feeders to Conveyor S-1a	Transfer point is fully enclosed and is also located underground.
DP5	Conveyor S-1b to Conveyor S-2	Transfer point is fully enclosed and is located inside a full enclosure at the top of the silo.
DP6	Conveyor S-2 to Silo	Transfer point inside a fully enclosed silo
DP7	Silos to Belt Feeders	Transfer point is fully enclosed and is located inside a fully enclosed silo.
DP8	Belt Feeders to Conveyor P-1	Transfer point is fully enclosed and is located inside a full enclosure underneath the silos.
T1	Existing Truck Dump to existing Silo Feed (S-1a) to existing Conveyor S1-b or New Transfer Conveyor S-3a	Full Enclosure
T2	Transfer Conveyor S-3a to Radial Stacker S-5 or Transfer Conveyor S-4	Partial Enclosure
T3	Transfer Conveyor S-4 to Radial Stacker S-6	Partial Enclosure
T4	Radial Stacker S-5 or Radial Stacker S-6 to Pile	Partial Enclosure
T7	Bulldozer to New Reclaim Hoppers	Transfer point is located and controlled underground

T8	New Reclaim Hoppers to New Reclaim Coal Conveyor T	Underground
T9	New Reclaim Conveyor T to Existing P-1 Conveyor	Partial Enclosure / Underground
T10	New Transfer on P-1 Conveyor to P-2 Conveyor	Full Enclosure
T11	Transfer Conveyor C-SF-1 with associated transfer house	Partial Enclosure
T12	Transfer Conveyor C-SF-2 with associated transfer house	Partial Enclosure
T13	Raw Coal Stock Out Conveyor "R" (MTST-00-CS-CNV-R) with associated transfer house	Partial Enclosure

[45CSR§30-12.7., 45CSR13, R13-2034, 1.0.]
(Title V permit condition 5.1.2)

Operation and Maintenance of Air Pollution Control Equipment. The permittee shall, to the extent practicable, install, maintain, and operate all pollution control equipment listed in Section 5.1.2 and associated monitoring equipment in a manner consistent with safety and good air pollution control practices for minimizing emissions, or comply with any more stringent limits set forth in this permit or as set forth by any State rule, Federal regulation, or alternative control plan approved by the Secretary.
[45CSR13, R13-2034, 4.1.8.]
(Title V permit condition 5.1.11)

The permitted facility shall be constructed and operated in accordance with the plans and specifications filed in Permit Applications R13-2034, R13-2034A, R13-2034B, R13-2034C, and any modifications, administrative updates, or amendments thereto. The Secretary may suspend or revoke a permit if the plans and specifications upon which the approval was based are not adhered to.
[45CSR13, R13-2034, 2.5.1.]
(Title V permit condition 5.1.12)

__X__ Permit Shield

For all applicable requirements listed above, provide monitoring/testing/recordkeeping/reporting which shall be used to demonstrate compliance. If the method is based on a permit or rule, include the condition number or citation. (Note: Each requirement listed above must have an associated method of demonstrating compliance. If there is not already a required method in place, then a method must be proposed.)

For the purposes of determining compliance with Section 5.1.1, the permittee shall monitor the total amount of coal transferred through both truck dumps at the Coal Truck Unloading Facility.
[45CSR13, R13-2034, 4.2.1.]
(Title V permit condition 5.2.1)

For the purposes of determining compliance with Section 5.1.1, the permittee shall maintain certified records of the total amount of coal transferred through both truck dumps at the Coal Truck Unloading Facility, as per Attachments A and B.
[45CSR13, R13-2034, 4.4.4.]
(Title V permit condition 5.4.1)

Record of Maintenance of Air Pollution Control Equipment. For all pollution control equipment listed in Section 5.1.2, the permittee shall maintain accurate records of all required pollution control equipment inspection and/or preventative maintenance procedures.
[45CSR13, R13-2034, 4.4.2.]
(Title V permit condition 5.4.3)

Record of Malfunctions of Air Pollution Control Equipment. For all air pollution control equipment listed in Section 5.1.2, the permittee shall maintain records of the occurrence and duration of any malfunction or operational shutdown of the air pollution control equipment during which excess emissions occur. For each such case, the following information shall be recorded:
a. The equipment involved.
b. Steps taken to minimize emissions during the event.
c. The duration of the event.
d. The estimated increase in emissions during the event.
For each such case associated with an equipment malfunction, the additional information shall also be recorded:
e. The cause of the malfunction.
f. Steps taken to correct the malfunction.
g. Any changes or modifications to equipment or procedures that would help prevent future recurrences of the malfunction.
[45CSR13, R13-2034, 4.4.3.]
(Title V permit condition 5.4.4)

Are you in compliance with all applicable requirements for this emission unit? _X_ Yes ___ No

If no, complete the **Schedule of Compliance Form** as **ATTACHMENT F.**

ATTACHMENT E

SOURCES FOR EMISSION POINT MS9

COAL CONVEYOR Q

(MTST-00-CS-CNV-Q)

ATTACHMENT E - Emission Unit Form

Emission Unit Description

Emission unit ID number:	**Emission unit name:**	**List any control devices associated with this emission unit:**
MTST-00-CS-CNV-Q	Sources for Emission Point MS9	Full Enclosure

Provide a description of the emission unit (type, method of operation, design parameters, etc.):
Coal conveyor from transfer house to primary crushers MTST-00-CS-CRH-4 or MTST-00-CS-CRH-5 or bypass chutes MTST-00-CS-CHT-C2BP and H2BP

Manufacturer:	**Model number:**	**Serial number:**
Mid-West Conveyor Company	N/A	N/A
Construction date:	**Installation date:**	**Modification date(s):**
1972	1972	N/A

Design Capacity (examples: furnaces - tons/hr, tanks - gallons):
1200TPH

Maximum Hourly Throughput:	**Maximum Annual Throughput:**	**Maximum Operating Schedule:**
1200TPH	2,677,200 tons	8760 hours

Fuel Usage Data **(fill out all applicable fields) NOT APPLICABLE**

Does this emission unit combust fuel? ___Yes _X__ No	**If yes, is it?** ___ Indirect Fired ___Direct Fired
Maximum design heat input and/or maximum horsepower rating: N/A	**Type and Btu/hr rating of burners:** N/A

List the primary fuel type(s) and if applicable, the secondary fuel type(s). For each fuel type listed, provide the maximum hourly and annual fuel usage for each.
N/A

Describe each fuel expected to be used during the term of the permit.

Fuel Type	Max. Sulfur Content	Max. Ash Content	BTU Value
N/A	N/A	N/A	N/A

Emissions Data		
Criteria Pollutants	Potential Emissions	
	PPH	TPY
Carbon Monoxide (CO)	N/A	N/A
Nitrogen Oxides (NO_X)	N/A	N/A
Lead (Pb)	N/A	N/A
Particulate Matter ($PM_{2.5}$)	N/A	N/A
Particulate Matter (PM_{10})	0.01	0.03
Total Particulate Matter (TSP)	0.01	0.05
Sulfur Dioxide (SO_2)	N/A	N/A
Volatile Organic Compounds (VOC)	N/A	N/A
Hazardous Air Pollutants	Potential Emissions	
	PPH	TPY
	N/A	N/A
Regulated Pollutants other than Criteria and HAP	Potential Emissions	
	PPH	TPY
	N/A	N/A

List the method(s) used to calculate the potential emissions (include dates of any stack tests conducted, versions of software used, source and dates of emission factors, etc.).

See Emission Calculations in Attachment I

Applicable Requirements

List all applicable requirements for this emission unit. For each applicable requirement, include the underlying rule/regulation citation and/or construction permit with the condition number. (*Note: Title V permit condition numbers alone are not the underlying applicable requirements*). If an emission limit is calculated based on the type of source and design capacity or if a standard is based on a design parameter, this information should also be included.

At all times except during periods of startup, shutdown, and malfunctions the visible emissions shall not exceed twenty percent (20%) opacity from the following equipment: coal conveyors, MTST-00-CS-CNV-R, -Q, -C2,-D, -H2, -J, -G, -C1, -H1, -S1a, S1b, -S3a, & -S2, the primary crushers MTST-00-CS-CRH-4 & -5, and the sample crushers MTST-00-CSS-CRH-B. In determining compliance with the particulate matter standard for opacity, Method 9 and the procedures in 40 C.F.R. § 60.11 shall be employed.
[45CSR16, 40 C.F.R. § 60.11 (c), 40 C.F.R. § 60.252 (c)]
(Title V permit condition 5.1.9)

At all times, including periods of startup, shutdown, and malfunction, any affected facility [coal equipment as listed in Section 5.1.9.] including associated air pollution control equipment shall, to the extent practicable, be maintained and operated in a manner consistent with good air pollution control practice for minimizing emissions. Determination that acceptable operating and maintenance procedures are being used, will be based on information available to the Secretary which may include, but is not limited to, monitoring results, opacity observations, review of operating and maintenance procedures, and inspection of the source.
[45CSR16, 40 C.F.R. § 60.11 (d)]
(Title V permit condition 5.1.10)

__X__ Permit Shield

For all applicable requirements listed above, provide monitoring/testing/recordkeeping/reporting which shall be used to demonstrate compliance. If the method is based on a permit or rule, include the condition number or citation. (Note: Each requirement listed above must have an associated method of demonstrating compliance. If there is not already a required method in place, then a method must be proposed.)

The emission points (i.e., enclosure openings as applicable) from the coal equipment as listed in Section 5.1. 9 shall be observed visually by an individual trained (not necessarily certified) per Method 22 at least each calendar month during periods of normal facility operation for a sufficient time interval to determine if any visible emissions are present. If visible emissions are observed for three (3) consecutive monthly observations, Method 9 tests (requires a certified observer) shall be conducted on those emission points having visible emissions within 48 hours or as soon as practicable from the last Method 22-like observation revealing visible emissions. The Method 9 tests shall be conducted during periods of normal facility operation. If any Method 9 test indicates opacity greater than 80% of the allowable visible emission requirement, Method 9 tests shall be conducted each calendar month for those emission points exceeding 80%. If any Method 9 test indicates opacity less than or equal to 80% of the allowable limit, the monthly Method 22-like observations may resume as previously described.
[45CSR§30-5.1.c.]
(Title V permit condition 5.3.1)

A record of each visible emissions observation as required in Section 5.3.1. shall be maintained, including any data required by 40 C.F.R. 60 Appendix A, Method 22 or Method 9, whichever is appropriate. The record shall include, at a minimum, the date, time, name of the emission unit, the applicable visible emissions requirement, the results of the observation, and the name of the observer.
[45CSR§30-5.1.c.]
(Title V permit condition 5.4.2)

Are you in compliance with all applicable requirements for this emission unit? Yes

If no, complete the **Schedule of Compliance Form** as **ATTACHMENT F.**

ATTACHMENT E

SOURCES FOR EMISSION POINT MS10

PRIMARY CRUSHERS, CRUSHER, RECLAIM CONVEYOR

(MTST-00-CS-CRH-4, MTST-00-CS-CRH-5, MTST-00-CS-CHT-C2BP, MTST-00-CS-CHT-H2BP, MTST-00-CS-CNV-C1, MTST-00-CS-CNV-H1)

ATTACHMENT E - Emission Unit Form

Emission Unit Description

Emission unit ID number:	**Emission unit name:**	**List any control devices associated with this emission unit:**
MTST-00-CS-CRH-4 MTST-00-CS-CRH-5 MTST-00-CS-CHT-C2BP MTST-00-CS-CHT-H2BP MTST-00-CS-CNV-C1 MTST-00-CS-CNV-H1	Sources for Emission Point MS10	MTST-00-CS-CRH-4: FE MTST-00-CS-CRH-5: FE MTST-00-CS-CHT-C2BP: FE MTST-00-CS-CHT-H2BP: FE MTST-00-CS-CNV-C1: UG/FE MTST-00-CS-CNV-H1: UG/FE

Provide a description of the emission unit (type, method of operation, design parameters, etc.):
MTST-00-CS-CRH-4: Primary crusher #4 to conveyor MTST-00-CS-CNV-C2

MTST-00-CS-CRH-5: Primary crusher #5 to conveyor MTST-00-CS-CNV-H2

MTST-00-CS-CHT-C2BP: #4 crusher bypass chute to MTST-00-CS-CNV-C2

MTST-00-CS-CHT-H2BP: #5 crusher bypass chute to MTST-00-CS-CNV-H2

MTST-00-CS-CNV-C1: Reclaim conveyor to primary crusher #4

MTST-00-CS-CNV-H1: Reclaim conveyor to primary crusher #5

Manufacturer:	**Model number:**	**Serial number:**
MTST-00-CS-CNV-C1: Mid West Conveyor Co. MTST-00-CS-CNV-H1: Mid West Conveyor Co.	N/A	N/A

Construction date:	**Installation date:**	**Modification date(s):**
MTST-00-CS-CRH-4: 1985	MTST-00-CS-CRH-4: 1985	N/A
MTST-00-CS-CRH-5: 1985	MTST-00-CS-CRH-5: 1985	
MTST-00-CS-CHT-C2BP: 1972	MTST-00-CS-CHT-C2BP: 1972	
MTST-00-CS-CHT-H2BP: 1972	MTST-00-CS-CHT-H2BP: 1972	
MTST-00-CS-CNV-C1: 1985	MTST-00-CS-CNV-C1: 1985	
MTST-00-CS-CNV-H1: 1985	MTST-00-CS-CNV-H1: 1985	

Design Capacity (examples: furnaces - tons/hr, tanks - gallons):
MTST-00-CS-CRH-4: 1200 TPH

MTST-00-CS-CRH-5: 1200 TPH

MTST-00-CS-CHT-C2BP: 800 TPH

MTST-00-CS-CHT-H2BP: 800 TPH

MTST-00-CS-CNV-C1: 1200 TPH

MTST-00-CS-CNV-H1: 1200 TPH

Maximum Hourly Throughput:	**Maximum Annual Throughput:**	**Maximum Operating Schedule:**
MTST-00-CS-CRH-4: 1200 TPH MTST-00-CS-CRH-5: 1200 TPH MTST-00-CS-CHT-C2BP: 800 TPH MTST-00-CS-CHT-H2BP: 800 TPH MTST-00-CS-CNV-C1: 1200 TPH MTST-00-CS-CNV-H1: 1200 TPH	MTST-00-CS-CRH-4: 2,127,600 tons MTST-00-CS-CRH-5: 2,127,600 tons MTST-00-CS-CHT-C2BP: 2,127,600 tons MTST-00-CS-CHT-H2BP: 2,127,600 tons MTST-00-CS-CNV-C1: 2,127,600 tons MTST-00-CS-CNV-H1: 2,127,600 tons	8760 hours

Fuel Usage Data **(fill out all applicable fields) NOT APPLICABLE**

Does this emission unit combust fuel? ___Yes _X__ No	**If yes, is it?** ___ Indirect Fired ___Direct Fired
Maximum design heat input and/or maximum horsepower rating: N/A	**Type and Btu/hr rating of burners:** N/A

List the primary fuel type(s) and if applicable, the secondary fuel type(s). For each fuel type listed, provide the maximum hourly and annual fuel usage for each.
N/A

Describe each fuel expected to be used during the term of the permit.

Fuel Type	Max. Sulfur Content	Max. Ash Content	BTU Value
N/A	N/A	N/A	N/A

Emissions Data		
Criteria Pollutants	Potential Emissions	
	PPH	TPY
Carbon Monoxide (CO)	N/A	N/A
Nitrogen Oxides (NO_X)	N/A	N/A
Lead (Pb)	N/A	N/A
Particulate Matter ($PM_{2.5}$)	N/A	N/A
Particulate Matter (PM_{10})	0.50	2.20
Total Particulate Matter (TSP)	1.49	6.51
Sulfur Dioxide (SO_2)	N/A	N/A
Volatile Organic Compounds (VOC)	N/A	N/A
Hazardous Air Pollutants	Potential Emissions	
	PPH	TPY
	N/A	N/A
Regulated Pollutants other than Criteria and HAP	Potential Emissions	
	PPH	TPY
	N/A	N/A

List the method(s) used to calculate the potential emissions (include dates of any stack tests conducted, versions of software used, source and dates of emission factors, etc.).

See Emission Calculations in Attachment I

Applicable Requirements

List all applicable requirements for this emission unit. For each applicable requirement, include the underlying rule/regulation citation and/or construction permit with the condition number. (*Note: Title V permit condition numbers alone are not the underlying applicable requirements*). If an emission limit is calculated based on the type of source and design capacity or if a standard is based on a design parameter, this information should also be included.

At all times except during periods of startup, shutdown, and malfunctions the visible emissions shall not exceed twenty percent (20%) opacity from the following equipment: coal conveyors, MTST-00-CS-CNV-R, -Q, -C2,-D, -H2, -J, -G, -C1, -H1, -S1a, S1b, -S3a, & -S2, the primary crushers MTST-00-CS-CRH-4 & -5, and the sample crushers MTST-00-CSS-CRH-B. In determining compliance with the particulate matter standard for opacity, Method 9 and the procedures in 40 C.F.R. § 60.11 shall be employed.
[45CSR16, 40 C.F.R. § 60.11 (c), 40 C.F.R. § 60.252 (c)]
(Title V permit condition 5.1.9)

At all times, including periods of startup, shutdown, and malfunction, any affected facility [coal equipment as listed in Section 5.1.9.] including associated air pollution control equipment shall, to the extent practicable, be maintained and operated in a manner consistent with good air pollution control practice for minimizing emissions. Determination that acceptable operating and maintenance procedures are being used, will be based on information available to the Secretary which may include, but is not limited to, monitoring results, opacity observations, review of operating and maintenance procedures, and inspection of the source.
[45CSR16, 40 C.F.R. § 60.11 (d)]
(Title V permit condition 5.1.10)

X Permit Shield

For all applicable requirements listed above, provide monitoring/testing/recordkeeping/reporting which shall be used to demonstrate compliance. If the method is based on a permit or rule, include the condition number or citation. (Note: Each requirement listed above must have an associated method of demonstrating compliance. If there is not already a required method in place, then a method must be proposed.)

The emission points (i.e., enclosure openings as applicable) from the coal equipment as listed in Section 5.1. 9 shall be observed visually by an individual trained (not necessarily certified) per Method 22 at least each calendar month during periods of normal facility operation for a sufficient time interval to determine if any visible emissions are present. If visible emissions are observed for three (3) consecutive monthly observations, Method 9 tests (requires a certified observer) shall be conducted on those emission points having visible emissions within 48 hours or as soon as practicable from the last Method 22-like observation revealing visible emissions. The Method 9 tests shall be conducted during periods of normal facility operation. If any Method 9 test indicates opacity greater than 80% of the allowable visible emission requirement, Method 9 tests shall be conducted each calendar month for those emission points exceeding 80%. If any Method 9 test indicates opacity less than or equal to 80% of the allowable limit, the monthly Method 22-like observations may resume as previously described.
[45CSR§30-5.1.c.]
(Title V permit condition 5.3.1)

A record of each visible emissions observation as required in Section 5.3.1. shall be maintained, including any data required by 40 C.F.R. 60 Appendix A, Method 22 or Method 9, whichever is appropriate. The record shall include, at a minimum, the date, time, name of the emission unit, the applicable visible emissions requirement, the results of the observation, and the name of the observer.
[45CSR§30-5.1.c.]
(Title V permit condition 5.4.2)

Are you in compliance with all applicable requirements for this emission unit? Yes

If no, complete the **Schedule of Compliance Form** as **ATTACHMENT F.**

ATTACHMENT E

SOURCES FOR EMISSION POINT MS11

COAL CONVEYORS

(MTST-00-CS-CNV-C2 & MTST-00-CS-CNV-H2)

ATTACHMENT E - Emission Unit Form

Emission Unit Description

Emission unit ID number:	**Emission unit name:**	**List any control devices associated with this emission unit:**
MTST-00-CS-CNV-C2 MTST-00-CS-CNV-H2	Sources for Emission Point MS11	MTST-00-CS-CNV-C2: FE MTST-00-CS-CNV-H2: FE

Provide a description of the emission unit (type, method of operation, design parameters, etc.):
MTST-00-CS-CNV-C2: Coal conveyor from primary crusher #4 to conveyor MTST-00-CS-CNV-D

MTST-00-CS-CNV-H2: Coal conveyor from primary crusher #5 to conveyor MTST-00-CS-CNV-J

Manufacturer:	**Model number:**	**Serial number:**
N/A	N/A	N/A
Construction date: MTST-00-CS-CNV-C2: 1985 MTST-00-CS-CNV-H2: 1985	**Installation date:** MTST-00-CS-CNV-C2: 1985 MTST-00-CS-CNV-H2: 1985	**Modification date(s):** N/A

Design Capacity (examples: furnaces - tons/hr, tanks - gallons):
MTST-00-CS-CNV-C2: 1200 TPH

MTST-00-CS-CNV-H2: 1200 TPH

Maximum Hourly Throughput:	**Maximum Annual Throughput:**	**Maximum Operating Schedule:**
MTST-00-CS-CNV-C2: 1200 TPH MTST-00-CS-CNV-H2: 1200 TPH	MTST-00-CS-CNV-C2: 1,338,000 tons MTST-00-CS-CNV-H2: 1,338,000 tons	8760 hours

Fuel Usage Data **(fill out all applicable fields) NOT APPLICABLE**

Does this emission unit combust fuel? ___Yes _X__ No	**If yes, is it?** ___ Indirect Fired ___Direct Fired
Maximum design heat input and/or maximum horsepower rating: N/A	**Type and Btu/hr rating of burners:** N/A

List the primary fuel type(s) and if applicable, the secondary fuel type(s). For each fuel type listed, provide the maximum hourly and annual fuel usage for each.
N/A

Describe each fuel expected to be used during the term of the permit.

Fuel Type	Max. Sulfur Content	Max. Ash Content	BTU Value
N/A	N/A	N/A	N/A

Emissions Data		
Criteria Pollutants	Potential Emissions	
	PPH	TPY
Carbon Monoxide (CO)	N/A	N/A
Nitrogen Oxides (NO_X)	N/A	N/A
Lead (Pb)	N/A	N/A
Particulate Matter ($PM_{2.5}$)	N/A	N/A
Particulate Matter (PM_{10})	0.01	0.05
Total Particulate Matter (TSP)	0.02	0.11
Sulfur Dioxide (SO_2)		
Volatile Organic Compounds (VOC)		
Hazardous Air Pollutants	Potential Emissions	
	PPH	TPY
	N/A	N/A
Regulated Pollutants other than Criteria and HAP	Potential Emissions	
	PPH	TPY
	N/A	N/A

List the method(s) used to calculate the potential emissions (include dates of any stack tests conducted, versions of software used, source and dates of emission factors, etc.).

See Emission Calculations in Attachment I

Applicable Requirements

List all applicable requirements for this emission unit. For each applicable requirement, include the underlying rule/regulation citation and/or construction permit with the condition number. (*Note: Title V permit condition numbers alone are not the underlying applicable requirements*). If an emission limit is calculated based on the type of source and design capacity or if a standard is based on a design parameter, this information should also be included.

At all times except during periods of startup, shutdown, and malfunctions the visible emissions shall not exceed twenty percent (20%) opacity from the following equipment: coal conveyors, MTST-00-CS-CNV-R, -Q, -C2,-D, -H2, -J, -G, -C1, -H1, -S1a, S1b, -S3a, & -S2, the primary crushers MTST-00-CS-CRH-4 & -5, and the sample crushers MTST-00-CSS-CRH-B. In determining compliance with the particulate matter standard for opacity, Method 9 and the procedures in 40 C.F.R. § 60.11 shall be employed.
[45CSR16, 40 C.F.R. § 60.11 (c), 40 C.F.R. § 60.252 (c)]
(Title V permit condition 5.1.9)

At all times, including periods of startup, shutdown, and malfunction, any affected facility [coal equipment as listed in Section 5.1.9.] including associated air pollution control equipment shall, to the extent practicable, be maintained and operated in a manner consistent with good air pollution control practice for minimizing emissions. Determination that acceptable operating and maintenance procedures are being used, will be based on information available to the Secretary which may include, but is not limited to, monitoring results, opacity observations, review of operating and maintenance procedures, and inspection of the source.
[45CSR16, 40 C.F.R. § 60.11 (d)]
(Title V permit condition 5.1.10)

_X_ Permit Shield

For all applicable requirements listed above, provide monitoring/testing/recordkeeping/reporting which shall be used to demonstrate compliance. If the method is based on a permit or rule, include the condition number or citation. (Note: Each requirement listed above must have an associated method of demonstrating compliance. If there is not already a required method in place, then a method must be proposed.)

The emission points (i.e., enclosure openings as applicable) from the coal equipment as listed in Section 5.1. 9 shall be observed visually by an individual trained (not necessarily certified) per Method 22 at least each calendar month during periods of normal facility operation for a sufficient time interval to determine if any visible emissions are present. If visible emissions are observed for three (3) consecutive monthly observations, Method 9 tests (requires a certified observer) shall be conducted on those emission points having visible emissions within 48 hours or as soon as practicable from the last Method 22-like observation revealing visible emissions. The Method 9 tests shall be conducted during periods of normal facility operation. If any Method 9 test indicates opacity greater than 80% of the allowable visible emission requirement, Method 9 tests shall be conducted each calendar month for those emission points exceeding 80%. If any Method 9 test indicates opacity less than or equal to 80% of the allowable limit, the monthly Method 22-like observations may resume as previously described.
[45CSR§30-5.1.c.]
(Title V permit condition 5.3.1)

A record of each visible emissions observation as required in Section 5.3.1. shall be maintained, including any data required by 40 C.F.R. 60 Appendix A, Method 22 or Method 9, whichever is appropriate. The record shall include, at a minimum, the date, time, name of the emission unit, the applicable visible emissions requirement, the results of the observation, and the name of the observer.
[45CSR§30-5.1.c.]
(Title V permit condition 5.4.2)

Are you in compliance with all applicable requirements for this emission unit? Yes

If no, complete the **Schedule of Compliance Form** as **ATTACHMENT F.**

ATTACHMENT E

SOURCES FOR EMISSION POINT MS12

TRIPPER REJECT FEEDER & COAL CONVEYOR

(MTST-00-CS-FDR-D, MTST-00-CS-CNV-D, MTST-00-CS-FDR-J, MTST-00-CS-CNV-J)

ATTACHMENT E - Emission Unit Form

Emission Unit Description

Emission unit ID number:	**Emission unit name:**	**List any control devices associated with this emission unit:**
MTST-00-CS-FDR-D MTST-00-CS-CNV-D MTST-00-CS-FDR-J MTST-00-CS-CNV-J	Sources for Emission Point MS12	MTST-00-CS-FDR-D: FE MTST-00-CS-CNV-D: FE MTST-00-CS-FDR-J: FE MTST-00-CS-CNV-J: FE

Provide a description of the emission unit (type, method of operation, design parameters, etc.):
MTST-00-CS-FDR-D: Tripper reject feeder to conveyor MTST-00-CS-CNV-D

MTST-00-CS-CNV-D: Coal conveyor to units 1, 2, and 3 bunkers

MTST-00-CS-FDR-J: Tripper reject feeder to conveyor MTST-00-CS-CNV-J

MTST-00-CS-CNV-J: Coal conveyor to units 1, 2, and 3 bunkers

Manufacturer:	**Model number:**	**Serial number:**
MTST-00-CS-FDR-D: Mid-West Conveyor Co. MTST-00-CS-CNV-JA: Mid-West Conveyor Co. MTST-00-CS-CNV-J: Mid-West Conveyor Co.	N/A	N/A

Construction date:	**Installation date:**	**Modification date(s):**
MTST-00-CS-FDR-D: 1985 MTST-00-CS-CNV-D: 1985 MTST-00-CS-FDR-J: 1985 MTST-00-CS-CNV-J: 1985	MTST-00-CS-FDR-D: 1985 MTST-00-CS-CNV-D: 1985 MTST-00-CS-FDR-J: 1985 MTST-00-CS-CNV-J: 1985	N/A

Design Capacity (examples: furnaces - tons/hr, tanks - gallons):
MTST-00-CS-FDR-D: 1200 TPH

MTST-00-CS-CNV-D: 1200 TPH

MTST-00-CS-FDR-J: 1200 TPH

MTST-00-CS-CNV-J: 1200 TPH

Maximum Hourly Throughput:	**Maximum Annual Throughput:**	**Maximum Operating Schedule:**
MTST-00-CS-FDR-D: 1200 TPH MTST-00-CS-CNV-D: 1200 TPH MTST-00-CS-FDR-J: 1200 TPH MTST-00-CS-CNV-J: 1200 TPH	MTST-00-CS-FDR-D: 2,127,600 Tons MTST-00-CS-CNV-D: 2,127,600 Tons MTST-00-CS-FDR-J: 2,127,600 Tons MTST-00-CS-CNV-J: 2,127,600 Tons	8760 hours

Fuel Usage Data (fill out all applicable fields) NOT APPLICABLE	
Does this emission unit combust fuel? ___Yes _X__ No	**If yes, is it?** ___ Indirect Fired ___Direct Fired
Maximum design heat input and/or maximum horsepower rating: N/A	**Type and Btu/hr rating of burners:** N/A

List the primary fuel type(s) and if applicable, the secondary fuel type(s). For each fuel type listed, provide the maximum hourly and annual fuel usage for each.
N/A

Describe each fuel expected to be used during the term of the permit.

Fuel Type	Max. Sulfur Content	Max. Ash Content	BTU Value
N/A	N/A	N/A	N/A

Emissions Data		
Criteria Pollutants	Potential Emissions	
	PPH	TPY
Carbon Monoxide (CO)	N/A	N/A
Nitrogen Oxides (NO_X)	N/A	N/A
Lead (Pb)	N/A	N/A
Particulate Matter ($PM_{2.5}$)	N/A	N/A
Particulate Matter (PM_{10})	0.02	0.10
Total Particulate Matter (TSP)	0.05	0.22
Sulfur Dioxide (SO_2)	N/A	N/A
Volatile Organic Compounds (VOC)	N/A	N/A
Hazardous Air Pollutants	Potential Emissions	
	PPH	TPY
	N/A	N/A
Regulated Pollutants other than Criteria and HAP	Potential Emissions	
	PPH	TPY
	N/A	N/A

List the method(s) used to calculate the potential emissions (include dates of any stack tests conducted, versions of software used, source and dates of emission factors, etc.).

See Emission Calculations in Attachment I

Applicable Requirements

List all applicable requirements for this emission unit. For each applicable requirement, include the underlying rule/regulation citation and/or construction permit with the condition number. (*Note: Title V permit condition numbers alone are not the underlying applicable requirements*). If an emission limit is calculated based on the type of source and design capacity or if a standard is based on a design parameter, this information should also be included.

At all times except during periods of startup, shutdown, and malfunctions the visible emissions shall not exceed twenty percent (20%) opacity from the following equipment: coal conveyors, MTST-00-CS-CNV-R, -Q, -C2,-D, -H2, -J, -G, -C1, -H1, -S1a, S1b, -S3a, & -S2, the primary crushers MTST-00-CS-CRH-4 & -5, and the sample crushers MTST-00-CSS-CRH-B. In determining compliance with the particulate matter standard for opacity, Method 9 and the procedures in 40 C.F.R. § 60.11 shall be employed.
[45CSR16, 40 C.F.R. § 60.11 (c), 40 C.F.R. § 60.252 (c)]
(Title V permit condition 5.1.9)

At all times, including periods of startup, shutdown, and malfunction, any affected facility [coal equipment as listed in Section 5.1.9.] including associated air pollution control equipment shall, to the extent practicable, be maintained and operated in a manner consistent with good air pollution control practice for minimizing emissions. Determination that acceptable operating and maintenance procedures are being used, will be based on information available to the Secretary which may include, but is not limited to, monitoring results, opacity observations, review of operating and maintenance procedures, and inspection of the source.
[45CSR16, 40 C.F.R. § 60.11 (d)]
(Title V permit condition 5.1.10)

_X__ Permit Shield

For all applicable requirements listed above, provide monitoring/testing/recordkeeping/reporting which shall be used to demonstrate compliance. If the method is based on a permit or rule, include the condition number or citation. (Note: Each requirement listed above must have an associated method of demonstrating compliance. If there is not already a required method in place, then a method must be proposed.)

The emission points (i.e., enclosure openings as applicable) from the coal equipment as listed in Section 5.1. 9 shall be observed visually by an individual trained (not necessarily certified) per Method 22 at least each calendar month during periods of normal facility operation for a sufficient time interval to determine if any visible emissions are present. If visible emissions are observed for three (3) consecutive monthly observations, Method 9 tests (requires a certified observer) shall be conducted on those emission points having visible emissions within 48 hours or as soon as practicable from the last Method 22-like observation revealing visible emissions. The Method 9 tests shall be conducted during periods of normal facility operation. If any Method 9 test indicates opacity greater than 80% of the allowable visible emission requirement, Method 9 tests shall be conducted each calendar month for those emission points exceeding 80%. If any Method 9 test indicates opacity less than or equal to 80% of the allowable limit, the monthly Method 22-like observations may resume as previously described.
[45CSR§30-5.1.c.]
(Title V permit condition 5.3.1)

A record of each visible emissions observation as required in Section 5.3.1. shall be maintained, including any data required by 40 C.F.R. 60 Appendix A, Method 22 or Method 9, whichever is appropriate. The record shall include, at a minimum, the date, time, name of the emission unit, the applicable visible emissions requirement, the results of the observation, and the name of the observer.
[45CSR§30-5.1.c.]
(Title V permit condition 5.4.2)

Are you in compliance with all applicable requirements for this emission unit? Yes

If no, complete the **Schedule of Compliance Form** as **ATTACHMENT F.**

ATTACHMENT E

SOURCES FOR EMISSION POINT MS13

RAIL CAR DUMP & FEEDERS

(MTST-00-CS-UNL-1, MTST-00-CS-FDR-A1, MTST-00-CS-FDR-A2)

ATTACHMENT E - Emission Unit Form

Emission Unit Description

Emission unit ID number:	**Emission unit name:**	**List any control devices associated with this emission unit:**
MTST-00-CS-UNL-1 MTST-00-CS-FDR-A1 MTST-00-CS-FDR-A2	Sources for Emission Point MS13	MTST-00-CS-UNL-1: PE/WS MTST-00-CS-FDR-A1: UG MTST-00-CS-FDR-A2: UG

Provide a description of the emission unit (type, method of operation, design parameters, etc.):
MTST-00-CS-UNL-1: Rail car dump

MTST-00-CS-FDR-A1: Feeder from rail car dump to conveyor MTST-00-CS-CNV-B

MTST-00-CS-FDR-A2: Feeder from rail car dump to conveyor MTST-00-CS-CNV-B

Manufacturer:	**Model number:**	**Serial number:**
MTST-00-CS-UNL-1: Heyl Patterson MTST-00-CS-FDR-A1: Jervis B Webb Co. MTST-00-CS-FDR-A2: Jervis B Webb Co.	N/A	N/A

Construction date:	**Installation date:**	**Modification date(s):**
MTST-00-CS-UNL-1: 1964 MTST-00-CS-FDR-A1: 1964 MTST-00-CS-FDR-A2: 1964	MTST-00-CS-UNL-1: 1964 MTST-00-CS-FDR-A1: 1964 MTST-00-CS-FDR-A2: 1964	N/A

Design Capacity (examples: furnaces - tons/hr, tanks - gallons):
MTST-00-CS-UNL-1: 1400 TPH

MTST-00-CS-FDR-A1: 700 TPH

MTST-00-CS-FDR-A2: 700 TPH

Maximum Hourly Throughput:	**Maximum Annual Throughput:**	**Maximum Operating Schedule:**
MTST-00-CS-UNL-1: 1400 TPH MTST-00-CS-FDR-A1: 700 TPH MTST-00-CS-FDR-A2: 700 TPH	MTST-00-CS-UNL-1: 1,283,800 Tons MTST-00-CS-FDR-A1: 1,283,800 Tons MTST-00-CS-FDR-A2: 1,283,800 Tons	8760 hours

Fuel Usage Data **(fill out all applicable fields) NOT APPLICABLE**

Does this emission unit combust fuel? ___Yes _X__ No	**If yes, is it?** ___ Indirect Fired ___Direct Fired
Maximum design heat input and/or maximum horsepower rating: N/A	**Type and Btu/hr rating of burners:** N/A

List the primary fuel type(s) and if applicable, the secondary fuel type(s). For each fuel type listed, provide the maximum hourly and annual fuel usage for each.
N/A

Describe each fuel expected to be used during the term of the permit.

Fuel Type	Max. Sulfur Content	Max. Ash Content	BTU Value
N/A	N/A	N/A	N/A

Emissions Data		
Criteria Pollutants	Potential Emissions	
	PPH	TPY
Carbon Monoxide (CO)	N/A	N/A
Nitrogen Oxides (NO_X)	N/A	N/A
Lead (Pb)	N/A	N/A
Particulate Matter ($PM_{2.5}$)	N/A	N/A
Particulate Matter (PM_{10})	0.35	1.52
Total Particulate Matter (TSP)	0.73	3.21
Sulfur Dioxide (SO_2)	N/A	N/A
Volatile Organic Compounds (VOC)	N/A	N/A
Hazardous Air Pollutants	Potential Emissions	
	PPH	TPY
	N/A	N/A
Regulated Pollutants other than Criteria and HAP	Potential Emissions	
	PPH	TPY
	N/A	N/A

List the method(s) used to calculate the potential emissions (include dates of any stack tests conducted, versions of software used, source and dates of emission factors, etc.).

See Emission Calculations in Attachment I.

Applicable Requirements

List all applicable requirements for this emission unit. For each applicable requirement, include the underlying rule/regulation citation and/or construction permit with the condition number. (*Note: Title V permit condition numbers alone are not the underlying applicable requirements*). If an emission limit is calculated based on the type of source and design capacity or if a standard is based on a design parameter, this information should also be included.

No emissions unit-specific applicable requirements for this source.

__X__ Permit Shield

For all applicable requirements listed above, provide monitoring/testing/recordkeeping/reporting which shall be used to demonstrate compliance. If the method is based on a permit or rule, include the condition number or citation. (Note: Each requirement listed above must have an associated method of demonstrating compliance. If there is not already a required method in place, then a method must be proposed.)

No emissions unit-specific applicable requirements for this source.

Are you in compliance with all applicable requirements for this emission unit? Yes

If no, complete the **Schedule of Compliance Form** as **ATTACHMENT F.**

ATTACHMENT E

SOURCES FOR EMISSION POINT MS14

COAL CONVEYOR TO CRUSHER AND SAMPLE SYSTEM

(MTST-00-CS-CNV-B)

ATTACHMENT E - Emission Unit Form

Emission Unit Description

Emission unit ID number:	Emission unit name:	List any control devices associated with this emission unit:
MTST-00-CS-CNV-B	Source for emission point MS14	UG/FE

Provide a description of the emission unit (type, method of operation, design parameters, etc.):
Coal conveyor to crusher MTST-00-CS-CRH-2 or conveyor MTST-00-CS-CNV-E and sample system MTST-00-CSS-SM-B.

Manufacturer:	**Model number:**	**Serial number:**
N/A	N/A	N/A
Construction date:	**Installation date:**	**Modification date(s):**
1972	1972	N/A

Design Capacity (examples: furnaces - tons/hr, tanks - gallons):
1400 TPH

Maximum Hourly Throughput:	**Maximum Annual Throughput:**	**Maximum Operating Schedule:**
1400 TPH	1,283,800 tons	8760 hours

Fuel Usage Data **(fill out all applicable fields) NOT APPLICABLE**

Does this emission unit combust fuel? ___Yes _X__ No	**If yes, is it?** ___ Indirect Fired ___Direct Fired
Maximum design heat input and/or maximum horsepower rating: N/A	**Type and Btu/hr rating of burners:** N/A

List the primary fuel type(s) and if applicable, the secondary fuel type(s). For each fuel type listed, provide the maximum hourly and annual fuel usage for each.
N/A

Describe each fuel expected to be used during the term of the permit.

Fuel Type	Max. Sulfur Content	Max. Ash Content	BTU Value
N/A	N/A	N/A	N/A

Emissions Data		
Criteria Pollutants	Potential Emissions	
	PPH	TPY
Carbon Monoxide (CO)	N/A	N/A
Nitrogen Oxides (NO_X)	N/A	N/A
Lead (Pb)	N/A	N/A
Particulate Matter ($PM_{2.5}$)	N/A	N/A
Particulate Matter (PM_{10})	0.01	0.03
Total Particulate Matter (TSP)	0.01	0.06
Sulfur Dioxide (SO_2)	N/A	N/A
Volatile Organic Compounds (VOC)	N/A	N/A
Hazardous Air Pollutants	Potential Emissions	
	PPH	TPY
	N/A	N/A
Regulated Pollutants other than Criteria and HAP	Potential Emissions	
	PPH	TPY
	N/A	N/A

List the method(s) used to calculate the potential emissions (include dates of any stack tests conducted, versions of software used, source and dates of emission factors, etc.).

See Emission Calculations in Attachment I.

Applicable Requirements

List all applicable requirements for this emission unit. For each applicable requirement, include the underlying rule/regulation citation and/or construction permit with the condition number. (*Note: Title V permit condition numbers alone are not the underlying applicable requirements*). If an emission limit is calculated based on the type of source and design capacity or if a standard is based on a design parameter, this information should also be included.

No emissions unit-specific applicable requirements for this source.

_X__ Permit Shield

For all applicable requirements listed above, provide monitoring/testing/recordkeeping/reporting which shall be used to demonstrate compliance. If the method is based on a permit or rule, include the condition number or citation. (Note: Each requirement listed above must have an associated method of demonstrating compliance. If there is not already a required method in place, then a method must be proposed.)

No emissions unit-specific applicable requirements for this source.

Are you in compliance with all applicable requirements for this emission unit? Yes

If no, complete the **Schedule of Compliance Form** as **ATTACHMENT F.**

ATTACHMENT E

SOURCES FOR EMISSION POINT MS15

COAL CRUSHER, FEEDER, SAMPLE FEEDER, COAL SAMPLE CRUSHER, AUTOMATIC SAMPLER & CONVEYOR

(MTST-00-CS-CRH-2, MTST-00-CS-FDR-M2, MTST-00-CSS-FDR-B, MTST-00-CSS-CRH-B, MTST-00-CSS-SM-B, MTST-00-CS-CNV-G, MTST-00-CS-CRH-3, MTST-00-CS-FDR-M3, MTST-00-CSS-FDR-G, MTST-00-CSS-FDR-G1, MTST-00-CSS-CRH-G, MTST-00-CSS-SM-G)

ATTACHMENT E - Emission Unit Form

Emission Unit Description

Emission unit ID number:	Emission unit name:	List any control devices associated with this emission unit:
MTST-00-CS-CRH-2	Sources for Emission Point MS15	MTST-00-CS-CRH-2: FE
MTST-00-CS-FDR-M2		MTST-00-CS-FDR-M2: FE
MTST-00-CSS-FDR-B		MTST-00-CSS-FDR-B: FE
MTST-00-CSS-CRH-B		MTST-00-CSS-CRH-B: FE
MTST-00-CSS-SM-B		MTST-00-CSS-SM-B: FE
MTST-00-CS-CNV-G		MTST-00-CS-CNV-G: UG AND FE
MTST-00-CS-CRH-3		MTST-00-CS-CRH-3: FE
MTST-00-CS-FDR-M3		MTST-00-CS-FDR-M3: FE
MTST-00-CSS-FDR-G		MTST-00-CSS-FDR-G: FE
MTST-00-CSS-FDR-G1		MTST-00-CSS-FDR-G1: FE
MTST-00-CSS-CRH-G		MTST-00-CSS-CRH-G: FE
MTST-00-CSS-SM-G		MTST-00-CSS-SM-G: FE

Provide a description of the emission unit (type, method of operation, design parameters, etc.):
MTST-00-CS-CRH-2: Coal crusher #2 to feeder MTST-00-CS-FDR-M2

MTST-00-CS-FDR-M2: Feeder from crusher #2 to conveyor MTST-00-CS-CNV-C2

MTST-00-CSS-FDR-B: Sample feeder to sample crusher MTST-00-CSS-CHR-B

MTST-00-CSS-CRH-B: Coal sample crusher to sampler MTST-00-CSS-SM-B

MTST-00-CSS-SM-B: Automatic sampler to sample cans or conveyor MTST-00-CS-CNV-E

MTST-00-CS-CNV-G: Conveyor to crusher MTST-00-CS-CRH-3 and feeder MTST-00-CSS-FDR-G

MTST-00-CS-CRH-3: Crusher #3 to feeder MTST-00-CS-FDR-M3

MTST-00-CS-FDR-M3: Feeder from crusher #3 to conveyors MTST-00-CS-CNV-E or MTST-00-CS-CNV-H2

MTST-00-CSS-FDR-G: Sample feeder from MTST-00-CS-FDR-M3 to sample feeder MTST-00-CSS-FDR-G1

MTST-00-CSS-FDR-G1: Sample feeder from MTST-00-CS-FDR-G to sample feeder MTST-00-CSS- FDR-G1 and from sample feeder to sample crusher MTST-00-CSS-CRH-G

MTST-00-CSS-CRH-G: Sample crusher to automatic sampler MTST-00-CSS-SM-G

MTST-00-CSS-SM-G: Automatic sampler to sample cans or conveyor MTST-00-CS-CNV-E

Manufacturer:	Model number:	Serial number:
MTST-00-CS-FDR-M3: Jervis B Webb Co.	N/A	MTST-00-CSS-FDR-B: F-91-755
		MTST-00-CSS-CRH-B: 12718
		MTST-00-CSS-SM-B: HY-77-638
		MTST-00-CS-CRH-3:13158
		MTST-00-CSS-FDR-G:HY-81-838
		MTST-00-CSS-FDR-G1:F-81-479
		MTST-00-CSS-CRH-G: 13520
		MTST-00-CSS-SM-G: HY-81-837

Construction date:	**Installation date:**	**Modification date(s):**
MTST-00-CS-CRH-2: 1964	MTST-00-CS-CRH-2: 1964	N/A
MTST-00-CS-FDR-M2: 1985	MTST-00-CS-FDR-M2: 1985	
MTST-00-CSS-FDR-B: 1985	MTST-00-CSS-FDR-B: 1985	
MTST-00-CSS-CRH-B: 1985	MTST-00-CSS-CRH-B: 1985	
MTST-00-CSS-SM-B: 1985	MTST-00-CSS-SM-B: 1985	
MTST-00-CS-CNV-G: 1985	MTST-00-CS-CNV-G: 1985	
MTST-00-CS-CRH-3: 1964	MTST-00-CS-CRH-3: 1964	
MTST-00-CS-FDR-M3: 1964	MTST-00-CS-FDR-M3: 1964	
MTST-00-CSS-FDR-G: 1985	MTST-00-CSS-FDR-G: 1985	
MTST-00-CSS-FDR-G1: 1985	MTST-00-CSS-FDR-G1: 1985	
MTST-00-CSS-CRH-G: 1985	MTST-00-CSS-CRH-G: 1985	
MTST-00-CSS-SM-G: 1985	MTST-00-CSS-SM-G: 1985	

Design Capacity (examples: furnaces - tons/hr, tanks - gallons):
MTST-00-CS-CRH-2: 700 TPH

MTST-00-CS-FDR-M2: 700 TPH

MTST-00-CSS-FDR-B: <500,000 lbs/hr

MTST-00-CSS-CRH-B: <500,000 lbs/hr

MTST-00-CSS-SM-B: <500,000 lbs/hr

MTST-00-CS-CNV-G: 700 TPH

MTST-00-CS-CRH-3: 800TPH

MTST-00-CS-FDR-M3: 700TPH

MTST-00-CSS-FDR-G: <500,000lbs/hr

MTST-00-CSS-FDR-G1: <500,000lbs/hr

MTST-00-CSS-CRH-G: <500,000lbs/hr

MTST-00-CSS-SM-G: <500,000lbs/hr

Maximum Hourly Throughput:	**Maximum Annual Throughput:**	**Maximum Operating Schedule:**
MTST-00-CS-CRH-2: 700 TPH	MTST-00-CS-CRH-2: Emissions unit not currently being used	8760 hours
MTST-00-CS-FDR-M2: 700 TPH	MTST-00-CS-FDR-M2: Emissions unit not currently being used	
MTST-00-CSS-FDR-B: <500,000 lbs/hr	MTST-00-CSS-FDR-B: Emissions unit not currently being used	
MTST-00-CSS-CRH-B: <500,000 lbs/hr	MTST-00-CSS-CRH-B: Emissions unit not currently being used	
MTST-00-CSS-SM-B: <500,000 lbs/hr	MTST-00-CSS-SM-B: Emissions unit not currently being used	
MTST-00-CS-CNV-G: 700 TPH		
MTST-00-CS-CRH-3: 800TPH		
MTST-00-CS-FDR-M3: 700TPH		

MTST-00-CSS-FDR-G: <500,000lbs/hr MTST-00-CSS-FDR-G1: <500,000lbs/hr MTST-00-CSS-CRH-G: <500,000lbs/hr MTST-00-CSS-SM-G: <500,000lbs/hr	MTST-00-CS-CNV-G: 282,100 Tons MTST-00-CS-CRH-3: Emissions unit not currently being used MTST-00-CS-FDR-M3: 282,100 Tons MTST-00-CSS-FDR-G: Emissions unit not currently being used MTST-00-CSS-FDR-G1: Emissions unit not currently being used MTST-00-CSS-CRH-G: Emissions unit not currently being used MTST-00-CSS-SM-G: Emissions unit not currently being used	

Fuel Usage Data **(fill out all applicable fields) NOT APPLICABLE**

Does this emission unit combust fuel? ___Yes _X__ No	**If yes, is it?** ___ Indirect Fired ___Direct Fired
Maximum design heat input and/or maximum horsepower rating: N/A	**Type and Btu/hr rating of burners:** N/A

List the primary fuel type(s) and if applicable, the secondary fuel type(s). For each fuel type listed, provide the maximum hourly and annual fuel usage for each.
N/A

Describe each fuel expected to be used during the term of the permit.

Fuel Type	Max. Sulfur Content	Max. Ash Content	BTU Value
N/A	N/A	N/A	N/A

Emissions Data		
Criteria Pollutants	Potential Emissions	
	PPH	TPY
Carbon Monoxide (CO)	N/A	N/A
Nitrogen Oxides (NO_X)	N/A	N/A
Lead (Pb)	N/A	N/A
Particulate Matter ($PM_{2.5}$)	N/A	N/A
Particulate Matter (PM_{10})	0.65	2.83
Total Particulate Matter (TSP)	1.92	8.43
Sulfur Dioxide (SO_2)	N/A	N/A
Volatile Organic Compounds (VOC)	N/A	N/A
Hazardous Air Pollutants	Potential Emissions	
	PPH	TPY
	N/A	N/A
Regulated Pollutants other than Criteria and HAP	Potential Emissions	
	PPH	TPY
	N/A	N/A

List the method(s) used to calculate the potential emissions (include dates of any stack tests conducted, versions of software used, source and dates of emission factors, etc.).

See Emission Calculations in Attachment I.

Applicable Requirements

List all applicable requirements for this emission unit. For each applicable requirement, include the underlying rule/regulation citation and/or construction permit with the condition number. (*Note: Title V permit condition numbers alone are not the underlying applicable requirements*). If an emission limit is calculated based on the type of source and design capacity or if a standard is based on a design parameter, this information should also be included.

At all times except during periods of startup, shutdown, and malfunctions the visible emissions shall not exceed twenty percent (20%) opacity from the following equipment: coal conveyors, MTST-00-CS-CNV-R, -Q, -C2, -D, -H2, -J, -G, -C1, -H1, -S1a, S1b, -S3a, & -S2, the primary crushers MTST-00-CS-CRH-4 & -5, and the sample crushers MTST-00-CSS-CRH-B. In determining compliance with the particulate matter standard for opacity, Method 9 and the procedures in 40 C.F.R. § 60.11 shall be employed.
[45CSR16, 40 C.F.R. § 60.11 (c), 40 C.F.R. § 60.252 (c)]
(Title V permit condition 5.1.9)

At all times, including periods of startup, shutdown, and malfunction, any affected facility [coal equipment as listed in Section 5.1.9.] including associated air pollution control equipment shall, to the extent practicable, be maintained and operated in a manner consistent with good air pollution control practice for minimizing emissions. Determination that acceptable operating and maintenance procedures are being used, will be based on information available to the Secretary which may include, but is not limited to, monitoring results, opacity observations, review of operating and maintenance procedures, and inspection of the source.
[45CSR16, 40 C.F.R. § 60.11 (d)]
(Title V permit condition 5.1.10)

__X__ Permit Shield

For all applicable requirements listed above, provide monitoring/testing/recordkeeping/reporting which shall be used to demonstrate compliance. If the method is based on a permit or rule, include the condition number or citation. (Note: Each requirement listed above must have an associated method of demonstrating

compliance. If there is not already a required method in place, then a method must be proposed.)

The emission points (i.e., enclosure openings as applicable) from the coal equipment as listed in Section 5.1. 9 shall be observed visually by an individual trained (not necessarily certified) per Method 22 at least each calendar month during periods of normal facility operation for a sufficient time interval to determine if any visible emissions are present. If visible emissions are observed for three (3) consecutive monthly observations, Method 9 tests (requires a certified observer) shall be conducted on those emission points having visible emissions within 48 hours or as soon as practicable from the last Method 22-like observation revealing visible emissions. The Method 9 tests shall be conducted during periods of normal facility operation. If any Method 9 test indicates opacity greater than 80% of the allowable visible emission requirement, Method 9 tests shall be conducted each calendar month for those emission points exceeding 80%. If any Method 9 test indicates opacity less than or equal to 80% of the allowable limit, the monthly Method 22-like observations may resume as previously described.
[45CSR§30-5.1.c.]
(Title V permit condition 5.3.1)

A record of each visible emissions observation as required in Section 5.3.1. shall be maintained, including any data required by 40 C.F.R. 60 Appendix A, Method 22 or Method 9, whichever is appropriate. The record shall include, at a minimum, the date, time, name of the emission unit, the applicable visible emissions requirement, the results of the observation, and the name of the observer.
[45CSR§30-5.1.c.]
(Title V permit condition 5.4.2)

Are you in compliance with all applicable requirements for this emission unit? Yes

If no, complete the **Schedule of Compliance Form** as **ATTACHMENT F.**

ATTACHMENT E

SOURCES FOR EMISSION POINT MS16

COAL CRUSHER

(MTST-00-CS-CNV-E)

ATTACHMENT E - Emission Unit Form

Emission Unit Description

Emission unit ID number:	**Emission unit name:**	**List any control devices associated with this emission unit:**
MTST-00-CS-CNV-E	Sources for Emission Point MS16	Full Enclosure

Provide a description of the emission unit (type, method of operation, design parameters, etc.):
Coal conveyor to stock out conveyor MTST-00-CS-CNV-F

Manufacturer:	**Model number:**	**Serial number:**
Continental Conveyor	N/A	N/A
Construction date:	**Installation date:**	**Modification date(s):**
1964	1964	N/A

Design Capacity (examples: furnaces - tons/hr, tanks - gallons):
2100 TPH

Maximum Hourly Throughput:	**Maximum Annual Throughput:**	**Maximum Operating Schedule:**
2100 TPH	1,566,600 Tons	8760 hours

Fuel Usage Data **(fill out all applicable fields) NOT APPLICABLE**

Does this emission unit combust fuel? ___Yes _X__ No	**If yes, is it?** ___ Indirect Fired ___Direct Fired
Maximum design heat input and/or maximum horsepower rating: N/A	**Type and Btu/hr rating of burners:** N/A

List the primary fuel type(s) and if applicable, the secondary fuel type(s). For each fuel type listed, provide the maximum hourly and annual fuel usage for each.
N/A

Describe each fuel expected to be used during the term of the permit.

Fuel Type	Max. Sulfur Content	Max. Ash Content	BTU Value
N/A	N/A	N/A	N/A

Emissions Data		
Criteria Pollutants	Potential Emissions	
	PPH	TPY
Carbon Monoxide (CO)	N/A	N/A
Nitrogen Oxides (NO_X)	N/A	N/A
Lead (Pb)	N/A	N/A
Particulate Matter ($PM_{2.5}$)	N/A	N/A
Particulate Matter (PM_{10})	0.01	0.02
Total Particulate Matter (TSP)	0.01	0.05
Sulfur Dioxide (SO_2)	N/A	N/A
Volatile Organic Compounds (VOC)	N/A	N/A
Hazardous Air Pollutants	Potential Emissions	
	PPH	TPY
	N/A	N/A
Regulated Pollutants other than Criteria and HAP	Potential Emissions	
	PPH	TPY
	N/A	N/A

List the method(s) used to calculate the potential emissions (include dates of any stack tests conducted, versions of software used, source and dates of emission factors, etc.).

See Emission Calculations in Attachment I.

Applicable Requirements

List all applicable requirements for this emission unit. For each applicable requirement, include the underlying rule/regulation citation and/or construction permit with the condition number. (*Note: Title V permit condition numbers alone are not the underlying applicable requirements*). If an emission limit is calculated based on the type of source and design capacity or if a standard is based on a design parameter, this information should also be included.

No emissions unit-specific applicable requirements for this source.

__X__ Permit Shield

For all applicable requirements listed above, provide monitoring/testing/recordkeeping/reporting which shall be used to demonstrate compliance. If the method is based on a permit or rule, include the condition number or citation. (Note: Each requirement listed above must have an associated method of demonstrating compliance. If there is not already a required method in place, then a method must be proposed.)

No emissions unit-specific applicable requirements for this source.

Are you in compliance with all applicable requirements for this emission unit? Yes

If no, complete the **Schedule of Compliance Form** as **ATTACHMENT F.**

ATTACHMENT E

SOURCES FOR EMISSION POINT MS17

STOCK OUT CONVEYOR

(MTST-00-CS-CNV-F)

ATTACHMENT E - Emission Unit Form

Emission Unit Description

Emission unit ID number:	**Emission unit name:**	**List any control devices associated with this emission unit:**
MTST-00-CS-CNV-F	Source for Emission Point MS17	Full Enclosure/Water Spray

Provide a description of the emission unit (type, method of operation, design parameters, etc.):
Stock out conveyor to coal storage pile

Manufacturer:	**Model number:**	**Serial number:**
N/A	N/A	N/A
Construction date:	**Installation date:**	**Modification date(s):**
1964	1964	N/A

Design Capacity (examples: furnaces - tons/hr, tanks - gallons):
2100 TPH

Maximum Hourly Throughput:	**Maximum Annual Throughput:**	**Maximum Operating Schedule:**
2100 TPH	1,566,600	8760 hours

Fuel Usage Data **(fill out all applicable fields) NOT APPLICABLE**

Does this emission unit combust fuel? ___Yes _X__ No	**If yes, is it?** ___ Indirect Fired ___Direct Fired
Maximum design heat input and/or maximum horsepower rating: N/A	**Type and Btu/hr rating of burners:** N/A

List the primary fuel type(s) and if applicable, the secondary fuel type(s). For each fuel type listed, provide the maximum hourly and annual fuel usage for each.
N/A

Describe each fuel expected to be used during the term of the permit.

Fuel Type	Max. Sulfur Content	Max. Ash Content	BTU Value
N/A	N/A	N/A	N/A

Emissions Data		
Criteria Pollutants	Potential Emissions	
	PPH	TPY
Carbon Monoxide (CO)	N/A	N/A
Nitrogen Oxides (NO_X)	N/A	N/A
Lead (Pb)	N/A	N/A
Particulate Matter ($PM_{2.5}$)	N/A	N/A
Particulate Matter (PM_{10})	0.62	2.72
Total Particulate Matter (TSP)	1.31	5.75
Sulfur Dioxide (SO_2)	N/A	N/A
Volatile Organic Compounds (VOC)	N/A	N/A
Hazardous Air Pollutants	Potential Emissions	
	PPH	TPY
	N/A	N/A
Regulated Pollutants other than Criteria and HAP	Potential Emissions	
	PPH	TPY
	N/A	N/A

List the method(s) used to calculate the potential emissions (include dates of any stack tests conducted, versions of software used, source and dates of emission factors, etc.).

See Emission Calculations in Attachment I.

Applicable Requirements

List all applicable requirements for this emission unit. For each applicable requirement, include the underlying rule/regulation citation and/or construction permit with the condition number. (*Note: Title V permit condition numbers alone are not the underlying applicable requirements*). If an emission limit is calculated based on the type of source and design capacity or if a standard is based on a design parameter, this information should also be included.

No emissions unit-specific applicable requirements for this source.

__X__ Permit Shield

For all applicable requirements listed above, provide monitoring/testing/recordkeeping/reporting which shall be used to demonstrate compliance. If the method is based on a permit or rule, include the condition number or citation. (Note: Each requirement listed above must have an associated method of demonstrating compliance. If there is not already a required method in place, then a method must be proposed.)

No emissions unit-specific applicable requirements for this source.

Are you in compliance with all applicable requirements for this emission unit? Yes

If no, complete the **Schedule of Compliance Form** as **ATTACHMENT F.**

ATTACHMENT E

SOURCES FOR EMISSION POINT MS18

COAL TRUCK DUMP & FEEDER

(MTST-00-BLD-CSD-2, MTST-00-CS-FDR-VBG1, MTST-00-CS-FDR-VBG2, MTST-00-CS-FDR-VBG3, MTST-00-CS-FDR-VBG4)

ATTACHMENT E - Emission Unit Form

Emission Unit Description

Emission unit ID number:	**Emission unit name:**	**List any control devices associated with this emission unit:**
MTST-00-BLD-CSD-2 MTST-00-CS-FDR-VBG1 MTST-00-CS-FDR-VBG2 MTST-00-CS-FDR-VBG3 MTST-00-CS-FDR-VBG4	Sources for Emission Point MS18	Truck Dump-None All Feeders: Underground

Provide a description of the emission unit (type, method of operation, design parameters, etc.):
MTST-00-BLD-CSD-2: Truck Dump

MTST-00-CS-FDR-VBG1: Feeder from truck dump hoppers to conveyor MTST-00-CS-CNV-G

MTST-00-CS-FDR-VBG2: Feeder from truck dump hoppers to conveyor MTST-00-CS-CNV-G

MTST-00-CS-FDR-VBG3: Feeder from truck dump hoppers to conveyor MTST-00-CS-CNV-G

MTST-00-CS-FDR-VBG4: Feeder from truck dump hoppers to conveyor MTST-00-CS-CNV-G

Manufacturer:	**Model number:**	**Serial number:**
N/A	N/A	N/A
Construction date: Truck Dump: 1964 Feeders: 1985	**Installation date:** Truck Dump: 1964 Feeders: 1985	**Modification date(s):** N/A

Design Capacity (examples: furnaces - tons/hr, tanks - gallons):
MTST-00-BLD-CSD-2: 700 TPH
MTST-00-CS-FDR-VBG1: 175 TPH
MTST-00-CS-FDR-VBG2: 175 TPH
MTST-00-CS-FDR-VBG3: 175 TPH
MTST-00-CS-FDR-VBG4: 175 TPH

Maximum Hourly Throughput:	**Maximum Annual Throughput:**	**Maximum Operating Schedule:**
MTST-00-BLD-CSD-2: 700 TPH MTST-00-CS-FDR-VBG1: 175 TPH MTST-00-CS-FDR-VBG2: 175 TPH MTST-00-CS-FDR-VBG3: 175 TPH MTST-00-CS-FDR-VBG4: 175TPH	MTST-00-BLD-CSD-2: 282,100 Tons MTST-00-CS-FDR-VBG1: 282,100 Tons MTST-00-CS-FDR-VBG2: 70,525 Tons MTST-00-CS-FDR-VBG3: 70,525 Tons MTST-00-CS-FDR-VBG4: 70,525 Tons	8760 hours

Fuel Usage Data **(fill out all applicable fields) NOT APPLICABLE**

Does this emission unit combust fuel? ___Yes _X__ No	**If yes, is it?** ___ Indirect Fired ___Direct Fired
Maximum design heat input and/or maximum horsepower rating: N/A	**Type and Btu/hr rating of burners:** N/A

List the primary fuel type(s) and if applicable, the secondary fuel type(s). For each fuel type listed, provide the maximum hourly and annual fuel usage for each.
N/A

Describe each fuel expected to be used during the term of the permit.

Fuel Type	Max. Sulfur Content	Max. Ash Content	BTU Value
N/A	N/A	N/A	N/A

Emissions Data		
Criteria Pollutants	Potential Emissions	
	PPH	TPY
Carbon Monoxide (CO)	N/A	N/A
Nitrogen Oxides (NO_X)	N/A	N/A
Lead (Pb)	N/A	N/A
Particulate Matter ($PM_{2.5}$)	N/A	N/A
Particulate Matter (PM_{10})	0.26	1.13
Total Particulate Matter (TSP)	0.55	2.39
Sulfur Dioxide (SO_2)	N/A	N/A
Volatile Organic Compounds (VOC)	N/A	N/A
Hazardous Air Pollutants	Potential Emissions	
	PPH	TPY
	N/A	N/A
Regulated Pollutants other than Criteria and HAP	Potential Emissions	
	PPH	TPY
	N/A	N/A

List the method(s) used to calculate the potential emissions (include dates of any stack tests conducted, versions of software used, source and dates of emission factors, etc.).

See Emission Calculations in Attachment I.

Applicable Requirements

List all applicable requirements for this emission unit. For each applicable requirement, include the underlying rule/regulation citation and/or construction permit with the condition number. (*Note: Title V permit condition numbers alone are not the underlying applicable requirements*). If an emission limit is calculated based on the type of source and design capacity or if a standard is based on a design parameter, this information should also be included.

No emissions unit-specific applicable requirements for this source.

__X__ Permit Shield

For all applicable requirements listed above, provide monitoring/testing/recordkeeping/reporting which shall be used to demonstrate compliance. If the method is based on a permit or rule, include the condition number or citation. (Note: Each requirement listed above must have an associated method of demonstrating compliance. If there is not already a required method in place, then a method must be proposed.)

No emissions unit-specific applicable requirements for this source.

Are you in compliance with all applicable requirements for this emission unit? Yes

If no, complete the **Schedule of Compliance Form** as **ATTACHMENT F.**

ATTACHMENT E

SOURCES FOR EMISSION POINT MS19

RECLAIM FEEDER

(MTST-00-CS-FDR-VBC1, MTST-00-CS-FDR-VBC2, MTST-00-CS-FDR-VBC3, MTST-00-CS-FDR-VBC4)

ATTACHMENT E - Emission Unit Form

Emission Unit Description

Emission unit ID number:	**Emission unit name:**	**List any control devices associated with this emission unit:**
MTST-00-CS-FDR-VBC1 MTST-00-CS-FDR-VBC2 MTST-00-CS-FDR-VBC3 MTST-00-CS-FDR-VBC4	Sources for Emission Point MS19	All Feeders: Underground

Provide a description of the emission unit (type, method of operation, design parameters, etc.):
MTST-00-CS-FDR-VBC1: Reclaim feeder from coal pile to conveyor MTST-00-CS-CNV-C1

MTST-00-CS-FDR-VBC2: Reclaim feeder from coal pile to conveyor MTST-00-CS-CNV-C1

MTST-00-CS-FDR-VBC3: Reclaim feeder from coal pile to conveyor MTST-00-CS-CNV-C1

MTST-00-CS-FDR-VBC4: Reclaim feeder from coal pile to conveyor MTST-00-CS-CNV-C1

Manufacturer:	**Model number:**	**Serial number:**
N/A	N/A	N/A
Construction date:	**Installation date:**	**Modification date(s):**
1985	1985	N/A

Design Capacity (examples: furnaces - tons/hr, tanks - gallons):
All feeders: 400TPH

Maximum Hourly Throughput:	**Maximum Annual Throughput:**	**Maximum Operating Schedule:**
MTST-00-CS-FDR-VBC1: 400 TPH MTST-00-CS-FDR-VBC2: 400 TPH MTST-00-CS-FDR-VBC3:400 TPH MTST-00-CS-FDR-VBC4: 400TPH	MTST-00-CS-FDR-VBC1: 788,800 Tons MTST-00-CS-FDR-VBC2: 788,800 Tons MTST-00-CS-FDR-VBC3: 788,800 Tons MTST-00-CS-FDR-VBC4: 788,800 Tons	8760 hours

Fuel Usage Data **(fill out all applicable fields) NOT APPLICABLE**

Does this emission unit combust fuel? ___Yes _X__ No	**If yes, is it?** ___ Indirect Fired ___Direct Fired
Maximum design heat input and/or maximum horsepower rating: N/A	**Type and Btu/hr rating of burners:** N/A

List the primary fuel type(s) and if applicable, the secondary fuel type(s). For each fuel type listed, provide the maximum hourly and annual fuel usage for each.
N/A

Describe each fuel expected to be used during the term of the permit.

Fuel Type	Max. Sulfur Content	Max. Ash Content	BTU Value
N/A	N/A	N/A	N/A

Emissions Data		
Criteria Pollutants	Potential Emissions	
	PPH	TPY
Carbon Monoxide (CO)	N/A	N/A
Nitrogen Oxides (NO_X)	N/A	N/A
Lead (Pb)	N/A	N/A
Particulate Matter ($PM_{2.5}$)	N/A	N/A
Particulate Matter (PM_{10})	0.01	0.05
Total Particulate Matter (TSP)	0.02	0.11
Sulfur Dioxide (SO_2)	N/A	N/A
Volatile Organic Compounds (VOC)	N/A	N/A
Hazardous Air Pollutants	Potential Emissions	
	PPH	TPY
	N/A	N/A
Regulated Pollutants other than Criteria and HAP	Potential Emissions	
	PPH	TPY
	N/A	N/A

List the method(s) used to calculate the potential emissions (include dates of any stack tests conducted, versions of software used, source and dates of emission factors, etc.).

See Emission Calculations in Attachment I.

Applicable Requirements

List all applicable requirements for this emission unit. For each applicable requirement, include the underlying rule/regulation citation and/or construction permit with the condition number. (*Note: Title V permit condition numbers alone are not the underlying applicable requirements*). If an emission limit is calculated based on the type of source and design capacity or if a standard is based on a design parameter, this information should also be included.

No emissions unit-specific applicable requirements for this source.

__X__ Permit Shield

For all applicable requirements listed above, provide monitoring/testing/recordkeeping/reporting which shall be used to demonstrate compliance. If the method is based on a permit or rule, include the condition number or citation. (Note: Each requirement listed above must have an associated method of demonstrating compliance. If there is not already a required method in place, then a method must be proposed.)

No emissions unit-specific applicable requirements for this source.

Are you in compliance with all applicable requirements for this emission unit? Yes

If no, complete the **Schedule of Compliance Form** as **ATTACHMENT F.**

ATTACHMENT E

SOURCES FOR EMISSION POINT MS20

RECLAIM FEEDER

(MTST-00-CS-FDR-VBH1, MTST-00-CS-FDR-VBH2, MTST-00-CS-FDR-VBH3)

ATTACHMENT E - Emission Unit Form

Emission Unit Description

Emission unit ID number:	**Emission unit name:**	**List any control devices associated with this emission unit:**
MTST-00-CS-FDR-VBH1 MTST-00-CS-FDR-VBH2 MTST-00-CS-FDR-VBH3	Sources for Emission Point MS20	All Feeders: Underground

Provide a description of the emission unit (type, method of operation, design parameters, etc.):
MTST-00-CS-FDR-VBH1: Reclaim feeder from coal pile to conveyor MTST-00-CS-CNV-H1

MTST-00-CS-FDR-VBH2: Reclaim feeder from coal pile to conveyor MTST-00-CS-CNV-H1

MTST-00-CS-FDR-VBH3: Reclaim feeder from coal pile to conveyor MTST-00-CS-CNV-H1

Manufacturer:	**Model number:**	**Serial number:**
N/A	N/A	N/A
Construction date:	**Installation date:**	**Modification date(s):**
1985	1985	N/A

Design Capacity (examples: furnaces - tons/hr, tanks - gallons):
All feeders: 400TPH

Maximum Hourly Throughput:	**Maximum Annual Throughput:**	**Maximum Operating Schedule:**
MTST-00-CS-FDR-VBH1: 400 TPH MTST-00-CS-FDR-VBH2: 400 TPH MTST-00-CS-FDR-VBH3: 400 TPH	MTST-00-CS-FDR-VBH1: 788,800 Tons MTST-00-CS-FDR-VBH2: 788,800 Tons MTST-00-CS-FDR-VBH3: 788,800 Tons	8760 hours

Fuel Usage Data **(fill out all applicable fields) NOT APPLICABLE**

Does this emission unit combust fuel? ___Yes _X__ No	**If yes, is it?** ___ Indirect Fired ___Direct Fired
Maximum design heat input and/or maximum horsepower rating: N/A	**Type and Btu/hr rating of burners:** N/A

List the primary fuel type(s) and if applicable, the secondary fuel type(s). For each fuel type listed, provide the maximum hourly and annual fuel usage for each.
N/A

Describe each fuel expected to be used during the term of the permit.

Fuel Type	Max. Sulfur Content	Max. Ash Content	BTU Value
N/A	N/A	N/A	N/A

Emissions Data		
Criteria Pollutants	Potential Emissions	
	PPH	TPY
Carbon Monoxide (CO)	N/A	N/A
Nitrogen Oxides (NO_X)	N/A	N/A
Lead (Pb)	N/A	N/A
Particulate Matter ($PM_{2.5}$)	N/A	N/A
Particulate Matter (PM_{10})	0.01	0.04
Total Particulate Matter (TSP)	0.02	0.08
Sulfur Dioxide (SO_2)	N/A	N/A
Volatile Organic Compounds (VOC)	N/A	N/A
Hazardous Air Pollutants	Potential Emissions	
	PPH	TPY
	N/A	N/A
Regulated Pollutants other than Criteria and HAP	Potential Emissions	
	PPH	TPY
	N/A	N/A

List the method(s) used to calculate the potential emissions (include dates of any stack tests conducted, versions of software used, source and dates of emission factors, etc.).

See Emission Calculations in Attachment I.

Applicable Requirements

List all applicable requirements for this emission unit. For each applicable requirement, include the underlying rule/regulation citation and/or construction permit with the condition number. (*Note: Title V permit condition numbers alone are not the underlying applicable requirements*). If an emission limit is calculated based on the type of source and design capacity or if a standard is based on a design parameter, this information should also be included.

No emissions unit-specific applicable requirements for this source.

_X__ Permit Shield

For all applicable requirements listed above, provide monitoring/testing/recordkeeping/reporting which shall be used to demonstrate compliance. If the method is based on a permit or rule, include the condition number or citation. (Note: Each requirement listed above must have an associated method of demonstrating compliance. If there is not already a required method in place, then a method must be proposed.)

No emissions unit-specific applicable requirements for this source.

Are you in compliance with all applicable requirements for this emission unit? Yes

If no, complete the **Schedule of Compliance Form** as **ATTACHMENT F.**

ATTACHMENT E

SOURCES FOR EMISSION POINT MS21

METTIKI COAL TRUCK DUMP ENCLOSURE & FEEDER

(MTST-00-CS-BLD, MTST-00-CS-FDR-S1, MTST-00-CS-FDR-S2, MTST-00-CS-FDR-S3, MTST-00-CS-FDR-S4)

ATTACHMENT E - Emission Unit Form

Emission Unit Description

Emission unit ID number:	**Emission unit name:**	**List any control devices associated with this emission unit:**
MTST-00-CS-BLD	Sources for Emission point MS21	MTST-00-CS-BLD: PE
MTST-00-CS-FDR-S1		MTST-00-CS-FDR-S1: PE/UG
MTST-00-CS-FDR-S2		MTST-00-CS-FDR-S2: PE/UG
MTST-00-CS-FDR-S3		MTST-00-CS-FDR-S3: PE/UG
MTST-00-CS-FDR-S4		MTST-00-CS-FDR-S4: PE/UG

Provide a description of the emission unit (type, method of operation, design parameters, etc.):
MTST-00-CS-BLD: Truck dump enclosure for coal trucks rated at 3,000,000 TPY

MTST-00-CS-FDR-S1: Discharge feeder from truck dump to Conveyor S1a

MTST-00-CS-FDR-S2: Discharge feeder from truck dump to Conveyor S1a

MTST-00-CS-FDR-S3: Discharge feeder from truck dump to Conveyor S1a

MTST-00-CS-FDR-S4: Discharge feeder from truck dump to Conveyor S1a

Manufacturer:	**Model number:**	**Serial number:**
MTST-00-CS-BLD: N/A	MTST-00-CS-BLD: N/A	MTST-00-CS-BLD: N/A
MTST-00-CS-FDR-S1: N/A	MTST-00-CS-FDR-S1: N/A	MTST-00-CS-FDR-S1: N/A
MTST-00-CS-FDR-S2: N/A	MTST-00-CS-FDR-S2: N/A	MTST-00-CS-FDR-S2: N/A
MTST-00-CS-FDR-S3: N/A	MTST-00-CS-FDR-S3: N/A	MTST-00-CS-FDR-S3: N/A
MTST-00-CS-FDR-S4: N/A	MTST-00-CS-FDR-S4: N/A	MTST-00-CS-FDR-S4: N/A

Construction date:	**Installation date:**	**Modification date(s):**
MTST-00-CS-BLD: 1996	MTST-00-CS-BLD: 1996	MTST-00-CS-BLD: 2006
MTST-00-CS-FDR-S1: 1996	MTST-00-CS-FDR-S1: 1996	MTST-00-CS-FDR-S1: 2006
MTST-00-CS-FDR-S2: 1996	MTST-00-CS-FDR-S2: 1996	MTST-00-CS-FDR-S2: 2006
MTST-00-CS-FDR-S3: 1996	MTST-00-CS-FDR-S3: 1996	MTST-00-CS-FDR-S3: 2006
MTST-00-CS-FDR-S4: 1996	MTST-00-CS-FDR-S4: 1996	MTST-00-CS-FDR-S4: 2006

Design Capacity (examples: furnaces - tons/hr, tanks - gallons):
MTST-00-CS-BLD: 1200 TPH

MTST-00-CS-FDR-S1: 300 TPH

MTST-00-CS-FDR-S2: 300 TPH

MTST-00-CS-FDR-S3: 300 TPH

MTST-00-CS-FDR-S4: 300 TPH

Maximum Hourly Throughput:	**Maximum Annual Throughput:**	**Maximum Operating Schedule:**
MTST-00-CS-BLD: 1200 TPH	MTST-00-CS-BLD: 3,000,000 TPY	MTST-00-CS-BLD: 8760 HPY
MTST-00-CS-FDR-S1: 300 TPH	MTST-00-CS-FDR-S1: 2,628,000 TPY	MTST-00-CS-FDR-S1: 8760 HPY
MTST-00-CS-FDR-S2: 300 TPH		MTST-00-CS-FDR-S2: 8760 HPY

MTST-00-CS-FDR-S3: 300 TPH MTST-00-CS-FDR-S4: 300 TPH	MTST-00-CS-FDR-S2: 2,628,000 TPY MTST-00-CS-FDR-S3: 2,628,000 TPY MTST-00-CS-FDR-S4: 2,628,000 TPY	MTST-00-CS-FDR-S3: 8760 HPY MTST-00-CS-FDR-S4: 8760 HPY

Fuel Usage Data **(fill out all applicable fields) NOT APPLICABLE**

Does this emission unit combust fuel? ___Yes _X__ No	**If yes, is it?** ___ Indirect Fired ___Direct Fired
Maximum design heat input and/or maximum horsepower rating: N/A	**Type and Btu/hr rating of burners:** N/A

List the primary fuel type(s) and if applicable, the secondary fuel type(s). For each fuel type listed, provide the maximum hourly and annual fuel usage for each.
N/A

Describe each fuel expected to be used during the term of the permit.

Fuel Type	Max. Sulfur Content	Max. Ash Content	BTU Value
N/A	N/A	N/A	N/A

Emissions Data

Criteria Pollutants	Potential Emissions	
	PPH	TPY
Carbon Monoxide (CO)	N/A	N/A
Nitrogen Oxides (NO_X)	N/A	N/A
Lead (Pb)	N/A	N/A
Particulate Matter ($PM_{2.5}$)	N/A	N/A
Particulate Matter (PM_{10})	0.04	0.17
Total Particulate Matter (TSP)	0.08	0.35
Sulfur Dioxide (SO_2)	N/A	N/A
Volatile Organic Compounds (VOC)	N/A	N/A

Hazardous Air Pollutants	Potential Emissions	
	PPH	TPY
	N/A	N/A

Regulated Pollutants other than Criteria and HAP	Potential Emissions	
	PPH	TPY
	N/A	N/A

List the method(s) used to calculate the potential emissions (include dates of any stack tests conducted, versions of software used, source and dates of emission factors, etc.).

See Emission Calculations in Attachment I.

Applicable Requirements

List all applicable requirements for this emission unit. For each applicable requirement, include the underlying rule/regulation citation and/or construction permit with the condition number. (*Note: Title V permit condition numbers alone are not the underlying applicable requirements*). If an emission limit is calculated based on the type of source and design capacity or if a standard is based on a design parameter, this information should also be included.

The maximum throughput of the Coal Truck Unloading Facility, originally constructed in 1996, shall not exceed 1,200 TPH and 3,000,000 TPY. The Facility shall consist of the two truck dumps (MTST-00-BLD), four collection bins, four vibratory feeders (MTST-00-CS-FDR-S1, 2, 3, & 4), a tube style reclaim conveyor (MTST-00-CS-CNV-S1a, MTST-00-CS-CNV-S1b), a transfer conveyor (MTST-00-CS-CNV-S2), existing Silo #1 (MTST-00-CS-CYS-1), existing Silo #2 (MTST-00-CS-CYS-2), existing belt feeders (MTST-00-CS-FDRVB1, 2, 3, 4, 5, & 6 and MTST-00-CS-FDR-N1, 2, 3, 4, 5, & 6), and existing conveyor "P" (MTST-00-CSCNV-P-1, MTST-00-CS-CNV-P-2).
[45CSR13, R13-2034, 4.1.1.]
(Title V permit condition 5.1.1)

In accordance with the information filed in Permit Application R13-2034, the following methods of controlling particulate matter emissions from the transfer points shall be installed, maintained, and operated so as to minimize emissions:

Transfer Point ID No.	Transfer Point Description	Method of Controls
DP1	Coal Trucks dumping to Collection Bins	Windbreaks 6 feet high with sheet metal walls extending up from the windbreaks and tying into a removable truss type roof.
DP2	Vibrating Feeders to Conveyor S-1a	Transfer point is fully enclosed and is also located underground.
DP5	Conveyor S-1b to Conveyor S-2	Transfer point is fully enclosed and is located inside a full enclosure at the top of the silo.
DP6	Conveyor S-2 to Silo	Transfer point inside a fully enclosed silo
DP7	Silos to Belt Feeders	Transfer point is fully enclosed and is located inside a fully enclosed silo.
DP8	Belt Feeders to Conveyor P-1	Transfer point is fully enclosed and is located inside a full enclosure underneath the silos.
T1	Existing Truck Dump to existing Silo Feed (S-1a) to existing Conveyor S1-b or New Transfer Conveyor S-3a	Full Enclosure
T2	Transfer Conveyor S-3a to Radial Stacker S-5 or Transfer Conveyor S-4	Partial Enclosure
T3	Transfer Conveyor S-4 to Radial Stacker S-6	Partial Enclosure
T4	Radial Stacker S-5 or Radial Stacker S-6 to Pile	Partial Enclosure
T7	Bulldozer to New Reclaim Hoppers	Transfer point is located and controlled underground

T8	New Reclaim Hoppers to New Reclaim Coal Conveyor T	Underground
T9	New Reclaim Conveyor T to Existing P-1 Conveyor	Partial Enclosure / Underground
T10	New Transfer on P-1 Conveyor to P-2 Conveyor	Full Enclosure
T11	Transfer Conveyor C-SF-1 with associated transfer house	Partial Enclosure
T12	Transfer Conveyor C-SF-2 with associated transfer house	Partial Enclosure
T13	Raw Coal Stock Out Conveyor "R" (MTST-00-CS-CNV-R) with associated transfer house	Partial Enclosure

[45CSR§30-12.7., 45CSR13, R13-2034, 1.0.]
(Title V permit condition 5.1.2)

In accordance with the information filed in Permit Application R13-2034, the 0.600 mile haul road connecting State Route 93 to the Coal Truck Unloading Facility, as defined in Section 5.1.1., shall be paved. Fugitive emissions from the haul road to the Coal Truck Unloading Facility shall be controlled by utilization of a pressurized water truck as defined by Section 5.1.6.
[45CSR13, R13-2034, 4.1.2.]
(Title V permit condition 5.1.3)

The permittee shall maintain a water truck on site and in good operating condition, and shall utilize same to apply water, or a mixture of water and an environmentally acceptable dust control additive, hereinafter referred to as solution, as often as is necessary in order to minimize the atmospheric entrainment of fugitive particulate emissions that may be generated from haulroads and other work areas where mobile equipment is used.
The spraybar shall be equipped with commercially available spray nozzles, of sufficient size and number, so as to provide adequate coverage to the area being treated.
The pump delivering the water, or solution, shall be of sufficient size and capacity so as to be capable of delivering to the spray nozzle(s) an adequate quantity of water, or solution, and at a sufficient pressure, so as to assure that the treatment process will minimize the atmospheric entrainment of fugitive particulate emissions generated from the haulroads and work areas where mobile equipment is used.
[45CSR13, R13-2034, 4.1.5.]
(Title V permit condition 5.1.6)

Operation and Maintenance of Air Pollution Control Equipment. The permittee shall, to the extent practicable, install, maintain, and operate all pollution control equipment listed in Section 5.1.2 and associated monitoring equipment in a manner consistent with safety and good air pollution control practices for minimizing emissions, or comply with any more stringent limits set forth in this permit or as set forth by any State rule, Federal regulation, or alternative control plan approved by the Secretary.
[45CSR13, R13-2034, 4.1.8.]
(Title V permit condition 5.1.11)

The permitted facility shall be constructed and operated in accordance with the plans and specifications filed in Permit Applications R13-2034, R13-2034A, R13-2034B, R13-2034C, and any modifications, administrative updates, or amendments thereto. The Secretary may suspend or revoke a permit if the plans and specifications upon which the approval was based are not adhered to.
[45CSR13, R13-2034, 2.5.1.]
(Title V permit condition 5.1.12)

__X__ Permit Shield

ATTACHMENT E

SOURCES FOR EMISSION POINT MS22

CONVEYOR & EXISTING TRUCK DUMP

(MTST-00-CS-CNV-S1a)

ATTACHMENT E - Emission Unit Form

Emission Unit Description

Emission unit ID number:	**Emission unit name:**	**List any control devices associated with this emission unit:**
MTST-00-CS-CNV-S1a	Source for emission point MS22	Underground/Full Enclosure

Provide a description of the emission unit (type, method of operation, design parameters, etc.):
Conveyor that collects coal from the Truck Dump and feeds conveyor S1b or S3a

Manufacturer:	**Model number:**	**Serial number:**
Sedgman	2023-0201	2023-0201
Construction date:	**Installation date:**	**Modification date(s):**
1996	1996	2006

Design Capacity (examples: furnaces - tons/hr, tanks - gallons):
1200 TPH

Maximum Hourly Throughput:	**Maximum Annual Throughput:**	**Maximum Operating Schedule:**
1200 TPH	3,000,000 TPY	8760 HPY

Fuel Usage Data **(fill out all applicable fields) NOT APPLICABLE**

Does this emission unit combust fuel? ___Yes _X__ No	**If yes, is it?** ___ Indirect Fired ___Direct Fired
Maximum design heat input and/or maximum horsepower rating: N/A	**Type and Btu/hr rating of burners:** N/A

List the primary fuel type(s) and if applicable, the secondary fuel type(s). For each fuel type listed, provide the maximum hourly and annual fuel usage for each.
N/A

Describe each fuel expected to be used during the term of the permit.

Fuel Type	Max. Sulfur Content	Max. Ash Content	BTU Value
N/A	N/A	N/A	N/A

Emissions Data

Criteria Pollutants	Potential Emissions	
	PPH	TPY
Carbon Monoxide (CO)	N/A	N/A
Nitrogen Oxides (NO_X)	N/A	N/A

Lead (Pb)	N/A	N/A
Particulate Matter ($PM_{2.5}$)	N/A	N/A
Particulate Matter (PM_{10})	0.01	0.01
Total Particulate Matter (TSP)	0.02	0.03
Sulfur Dioxide (SO_2)	N/A	N/A
Volatile Organic Compounds (VOC)	N/A	N/A
Hazardous Air Pollutants	Potential Emissions	
	PPH	TPY
	N/A	N/A
Regulated Pollutants other than Criteria and HAP	Potential Emissions	
	PPH	TPY
	N/A	N/A

List the method(s) used to calculate the potential emissions (include dates of any stack tests conducted, versions of software used, source and dates of emission factors, etc.).

See Emission Calculations in Attachment I.

Applicable Requirements

List all applicable requirements for this emission unit. For each applicable requirement, include the underlying rule/regulation citation and/or construction permit with the condition number. (*Note: Title V permit condition numbers alone are not the underlying applicable requirements*). If an emission limit is calculated based on the type of source and design capacity or if a standard is based on a design parameter, this information should also be included.

The maximum throughput of the Coal Truck Unloading Facility, originally constructed in 1996, shall not exceed 1,200 TPH and 3,000,000 TPY. The Facility shall consist of the two truck dumps (MTST-00-BLD), four collection bins, four vibratory feeders (MTST-00-CS-FDR-S1, 2, 3, & 4), a tube style reclaim conveyor (MTST-00-CS-CNV-S1a, MTST-00-CS-CNV-S1b), a transfer conveyor (MTST-00-CS-CNV-S2), existing Silo #1 (MTST-00-CS-CYS-1), existing Silo #2 (MTST-00-CS-CYS-2), existing belt feeders (MTST-00-CS-FDRVB1, 2, 3, 4, 5, & 6 and MTST-00-CS-FDR-N1, 2, 3, 4, 5, & 6), and existing conveyor "P" (MTST-00-CSCNV-P-1, MTST-00-CS-CNV-P-2).
[45CSR13, R13-2034, 4.1.1.]
(Title V permit condition 5.1.1)

In accordance with the information filed in Permit Application R13-2034, the following methods of controlling particulate matter emissions from the transfer points shall be installed, maintained, and operated so as to minimize emissions:

Transfer Point ID No.	Transfer Point Description	Method of Controls
DP1	Coal Trucks dumping to Collection Bins	Windbreaks 6 feet high with sheet metal walls extending up from the windbreaks and tying into a removable truss type roof.
DP2	Vibrating Feeders to Conveyor S-1a	Transfer point is fully enclosed and is also located underground.
DP5	Conveyor S-1b to Conveyor S-2	Transfer point is fully enclosed and is located inside a full enclosure at the top of the silo.
DP6	Conveyor S-2 to Silo	Transfer point inside a fully enclosed silo
DP7	Silos to Belt Feeders	Transfer point is fully enclosed and is located inside a fully enclosed silo.
DP8	Belt Feeders to Conveyor P-1	Transfer point is fully enclosed and is located inside a full enclosure underneath the silos.
T1	Existing Truck Dump to existing Silo Feed (S-1a) to existing Conveyor S1-b or New Transfer Conveyor S-3a	Full Enclosure
T2	Transfer Conveyor S-3a to Radial Stacker S-5 or Transfer Conveyor S-4	Partial Enclosure
T3	Transfer Conveyor S-4 to Radial Stacker S-6	Partial Enclosure
T4	Radial Stacker S-5 or Radial Stacker S-6 to Pile	Partial Enclosure
T7	Bulldozer to New Reclaim Hoppers	Transfer point is located and controlled underground

T8	New Reclaim Hoppers to New Reclaim Coal Conveyor T	Underground
T9	New Reclaim Conveyor T to Existing P-1 Conveyor	Partial Enclosure / Underground
T10	New Transfer on P-1 Conveyor to P-2 Conveyor	Full Enclosure
T11	Transfer Conveyor C-SF-1 with associated transfer house	Partial Enclosure
T12	Transfer Conveyor C-SF-2 with associated transfer house	Partial Enclosure
T13	Raw Coal Stock Out Conveyor "R" (MTST-00-CS-CNV-R) with associated transfer house	Partial Enclosure

[45CSR§30-12.7., 45CSR13, R13-2034, 1.0.]
(Title V permit condition 5.1.2)

At all times except during periods of startup, shutdown, and malfunctions the visible emissions shall not exceed twenty percent (20%) opacity from the following equipment: coal conveyors, MTST-00-CS-CNV-R, -Q, -C2, -D, -H2, -J, -G, -C1, -H1, -S1a, S1b, -S3a, & -S2, the primary crushers MTST-00-CS-CRH-4 & -5, and the sample crushers MTST-00-CSS-CRH-B. In determining compliance with the particulate matter standard for opacity, Method 9 and the procedures in 40 C.F.R. § 60.11 shall be employed.
[45CSR16, 40 C.F.R. § 60.11 (c), 40 C.F.R. § 60.252 (c)]
(Title V permit condition 5.1.9)

At all times, including periods of startup, shutdown, and malfunction, any affected facility [coal equipment as listed in Section 5.1.9.] including associated air pollution control equipment shall, to the extent practicable, be maintained and operated in a manner consistent with good air pollution control practice for minimizing emissions. Determination that acceptable operating and maintenance procedures are being used, will be based on information available to the Secretary which may include, but is not limited to, monitoring results, opacity observations, review of operating and maintenance procedures, and inspection of the source.
[45CSR16, 40 C.F.R. § 60.11 (d)]
(Title V permit condition 5.1.10)

Operation and Maintenance of Air Pollution Control Equipment. The permittee shall, to the extent practicable, install, maintain, and operate all pollution control equipment listed in Section 5.1.2 and associated monitoring equipment in a manner consistent with safety and good air pollution control practices for minimizing emissions, or comply with any more stringent limits set forth in this permit or as set forth by any State rule, Federal regulation, or alternative control plan approved by the Secretary.
[45CSR13, R13-2034, 4.1.8.]
(Title V permit condition 5.1.11)

The permitted facility shall be constructed and operated in accordance with the plans and specifications filed in Permit Applications R13-2034, R13-2034A, R13-2034B, R13-2034C, and any modifications, administrative updates, or amendments thereto. The Secretary may suspend or revoke a permit if the plans and specifications upon which the approval was based are not adhered to.
[45CSR13, R13-2034, 2.5.1.]
(Title V permit condition 5.1.12)

__X__ Permit Shield

For all applicable requirements listed above, provide monitoring/testing/recordkeeping/reporting which shall be used to demonstrate compliance. If the method is based on a permit or rule, include the condition number or citation. (Note: Each requirement listed above must have an associated method of demonstrating compliance. If there is not already a required method in place, then a method must be proposed.)

For the purposes of determining compliance with Section 5.1.1, the permittee shall monitor the total amount of coal transferred through both truck dumps at the Coal Truck Unloading Facility.
[45CSR13, R13-2034, 4.2.1.]
(Title V permit condition 5.2.1)

The emission points (i.e., enclosure openings as applicable) from the coal equipment as listed in Section 5.1. 9 shall be observed visually by an individual trained (not necessarily certified) per Method 22 at least each calendar month during periods of normal facility operation for a sufficient time interval to determine if any visible emissions are present. If visible emissions are observed for three (3) consecutive monthly observations, Method 9 tests (requires a certified observer) shall be conducted on those emission points having visible emissions within 48 hours or as soon as practicable from the last Method 22-like observation revealing visible emissions. The Method 9 tests shall be conducted during periods of normal facility operation. If any Method 9 test indicates opacity greater than 80% of the allowable visible emission requirement, Method 9 tests shall be conducted each calendar month for those emission points exceeding 80%. If any Method 9 test indicates opacity less than or equal to 80% of the allowable limit, the monthly Method 22-like observations may resume as previously described.
[45CSR§30-5.1.c.]
(Title V permit condition 5.3.1)

For the purposes of determining compliance with Section 5.1.1, the permittee shall maintain certified records of the total amount of coal transferred through both truck dumps at the Coal Truck Unloading Facility, as per Attachments A and B.
[45CSR13, R13-2034, 4.4.4.]
(Title V permit condition 5.4.1)

A record of each visible emissions observation as required in Section 5.3.1. shall be maintained, including any data required by 40 C.F.R. 60 Appendix A, Method 22 or Method 9, whichever is appropriate. The record shall include, at a minimum, the date, time, name of the emission unit, the applicable visible emissions requirement, the results of the observation, and the name of the observer.
[45CSR§30-5.1.c.]
(Title V permit condition 5.4.2)

Record of Maintenance of Air Pollution Control Equipment. For all pollution control equipment listed in Section 5.1.2, the permittee shall maintain accurate records of all required pollution control equipment inspection and/or preventative maintenance procedures.
[45CSR13, R13-2034, 4.4.2.]
(Title V permit condition 5.4.3)

Record of Malfunctions of Air Pollution Control Equipment. For all air pollution control equipment listed in Section 5.1.2, the permittee shall maintain records of the occurrence and duration of any malfunction or operational shutdown of the air pollution control equipment during which excess emissions occur. For each such case, the following information shall be recorded:
a. The equipment involved.
b. Steps taken to minimize emissions during the event.
c. The duration of the event.
d. The estimated increase in emissions during the event.
For each such case associated with an equipment malfunction, the additional information shall also be recorded:
e. The cause of the malfunction.
f. Steps taken to correct the malfunction.
g. Any changes or modifications to equipment or procedures that would help prevent future recurrences of the malfunction.
[45CSR13, R13-2034, 4.4.3.]
(Title V permit condition 5.4.4)

Are you in compliance with all applicable requirements for this emission unit? _X_ Yes ___ No

If no, complete the **Schedule of Compliance Form** as **ATTACHMENT F.**

ATTACHMENT E

SOURCES FOR EMISSION POINT MS23

CONVEYOR

(MTST-00-CS-CNV-S1b)

ATTACHMENT E - Emission Unit Form

Emission Unit Description

Emission unit ID number:	**Emission unit name:**	**List any control devices associated with this emission unit:**
MTST-00-CS-CNV-S1b	Source for emission point MS23	Full Enclosure

Provide a description of the emission unit (type, method of operation, design parameters, etc.):
Conveyor that feeds Conveyor S2

Manufacturer:	**Model number:**	**Serial number:**
N/A	N/A	N/A
Construction date:	**Installation date:**	**Modification date(s):**
1996	1996	2006

Design Capacity (examples: furnaces - tons/hr, tanks - gallons):
1200 TPH

Maximum Hourly Throughput:	**Maximum Annual Throughput:**	**Maximum Operating Schedule:**
1200 TPH	3,000,000 TPH	8760 HPY

Fuel Usage Data **(fill out all applicable fields) NOT APPLICABLE**

Does this emission unit combust fuel? ___Yes _X__ No	**If yes, is it?** ___ Indirect Fired ___Direct Fired
Maximum design heat input and/or maximum horsepower rating: N/A	**Type and Btu/hr rating of burners:** N/A

List the primary fuel type(s) and if applicable, the secondary fuel type(s). For each fuel type listed, provide the maximum hourly and annual fuel usage for each.
N/A

Describe each fuel expected to be used during the term of the permit.

Fuel Type	Max. Sulfur Content	Max. Ash Content	BTU Value
N/A	N/A	N/A	N/A

Emissions Data		
Criteria Pollutants	Potential Emissions	
	PPH	TPY
Carbon Monoxide (CO)	N/A	N/A
Nitrogen Oxides (NO_X)	N/A	N/A
Lead (Pb)	N/A	N/A
Particulate Matter ($PM_{2.5}$)	N/A	N/A
Particulate Matter (PM_{10})	0.01	0.01
Total Particulate Matter (TSP)	0.01	0.02
Sulfur Dioxide (SO_2)	N/A	N/A
Volatile Organic Compounds (VOC)	N/A	N/A
Hazardous Air Pollutants	Potential Emissions	
	PPH	TPY
	N/A	N/A
Regulated Pollutants other than Criteria and HAP	Potential Emissions	
	PPH	TPY
	N/A	N/A

List the method(s) used to calculate the potential emissions (include dates of any stack tests conducted, versions of software used, source and dates of emission factors, etc.).

See Emission Calculations in Attachment I.

Applicable Requirements

List all applicable requirements for this emission unit. For each applicable requirement, include the underlying rule/regulation citation and/or construction permit with the condition number. (*Note: Title V permit condition numbers alone are not the underlying applicable requirements*). If an emission limit is calculated based on the type of source and design capacity or if a standard is based on a design parameter, this information should also be included.

The maximum throughput of the Coal Truck Unloading Facility, originally constructed in 1996, shall not exceed 1,200 TPH and 3,000,000 TPY. The Facility shall consist of the two truck dumps (MTST-00-BLD), four collection bins, four vibratory feeders (MTST-00-CS-FDR-S1, 2, 3, & 4), a tube style reclaim conveyor (MTST-00-CS-CNV-S1a, MTST-00-CS-CNV-S1b), a transfer conveyor (MTST-00-CS-CNV-S2), existing Silo #1 (MTST-00-CS-CYS-1), existing Silo #2 (MTST-00-CS-CYS-2), existing belt feeders (MTST-00-CS-FDRVB1, 2, 3, 4, 5, & 6 and MTST-00-CS-FDR-N1, 2, 3, 4, 5, & 6), and existing conveyor "P" (MTST-00-CSCNV-P-1, MTST-00-CS-CNV-P-2).
[45CSR13, R13-2034, 4.1.1.]
(Title V permit condition 5.1.1)

In accordance with the information filed in Permit Application R13-2034, the following methods of controlling particulate matter emissions from the transfer points shall be installed, maintained, and operated so as to minimize emissions:

Transfer Point ID No.	Transfer Point Description	Method of Controls
DP1	Coal Trucks dumping to Collection Bins	Windbreaks 6 feet high with sheet metal walls extending up from the windbreaks and tying into a removable truss type roof.
DP2	Vibrating Feeders to Conveyor S-1a	Transfer point is fully enclosed and is also located underground.
DP5	Conveyor S-1b to Conveyor S-2	Transfer point is fully enclosed and is located inside a full enclosure at the top of the silo.
DP6	Conveyor S-2 to Silo	Transfer point inside a fully enclosed silo
DP7	Silos to Belt Feeders	Transfer point is fully enclosed and is located inside a fully enclosed silo.
DP8	Belt Feeders to Conveyor P-1	Transfer point is fully enclosed and is located inside a full enclosure underneath the silos.
T1	Existing Truck Dump to existing Silo Feed (S-1a) to existing Conveyor S1-b or New Transfer Conveyor S-3a	Full Enclosure
T2	Transfer Conveyor S-3a to Radial Stacker S-5 or Transfer Conveyor S-4	Partial Enclosure
T3	Transfer Conveyor S-4 to Radial Stacker S-6	Partial Enclosure
T4	Radial Stacker S-5 or Radial Stacker S-6 to Pile	Partial Enclosure
T7	Bulldozer to New Reclaim Hoppers	Transfer point is located and controlled underground

T8	New Reclaim Hoppers to New Reclaim Coal Conveyor T	Underground
T9	New Reclaim Conveyor T to Existing P-1 Conveyor	Partial Enclosure / Underground
T10	New Transfer on P-1 Conveyor to P-2 Conveyor	Full Enclosure
T11	Transfer Conveyor C-SF-1 with associated transfer house	Partial Enclosure
T12	Transfer Conveyor C-SF-2 with associated transfer house	Partial Enclosure
T13	Raw Coal Stock Out Conveyor "R" (MTST-00-CS-CNV-R) with associated transfer house	Partial Enclosure

[45CSR§30-12.7., 45CSR13, R13-2034, 1.0.]
(Title V permit condition 5.1.2)

At all times except during periods of startup, shutdown, and malfunctions the visible emissions shall not exceed twenty percent (20%) opacity from the following equipment: coal conveyors, MTST-00-CS-CNV-R, -Q, -C2, -D, -H2, -J, -G, -C1, -H1, -S1a, S1b, -S3a, & -S2, the primary crushers MTST-00-CS-CRH-4 & -5, and the sample crushers MTST-00-CSS-CRH-B. In determining compliance with the particulate matter standard for opacity, Method 9 and the procedures in 40 C.F.R. § 60.11 shall be employed.
[45CSR16, 40 C.F.R. § 60.11 (c), 40 C.F.R. § 60.252 (c)]
(Title V permit condition 5.1.9)

At all times, including periods of startup, shutdown, and malfunction, any affected facility [coal equipment as listed in Section 5.1.9.] including associated air pollution control equipment shall, to the extent practicable, be maintained and operated in a manner consistent with good air pollution control practice for minimizing emissions. Determination that acceptable operating and maintenance procedures are being used, will be based on information available to the Secretary which may include, but is not limited to, monitoring results, opacity observations, review of operating and maintenance procedures, and inspection of the source.
[45CSR16, 40 C.F.R. § 60.11 (d)]
(Title V permit condition 5.1.10)

Operation and Maintenance of Air Pollution Control Equipment. The permittee shall, to the extent practicable, install, maintain, and operate all pollution control equipment listed in Section 5.1.2 and associated monitoring equipment in a manner consistent with safety and good air pollution control practices for minimizing emissions, or comply with any more stringent limits set forth in this permit or as set forth by any State rule, Federal regulation, or alternative control plan approved by the Secretary.
[45CSR13, R13-2034, 4.1.8.]
(Title V permit condition 5.1.11)

The permitted facility shall be constructed and operated in accordance with the plans and specifications filed in Permit Applications R13-2034, R13-2034A, R13-2034B, R13-2034C, and any modifications, administrative updates, or amendments thereto. The Secretary may suspend or revoke a permit if the plans and specifications upon which the approval was based are not adhered to.
[45CSR13, R13-2034, 2.5.1.]
(Title V permit condition 5.1.12)

__X__ Permit Shield

For all applicable requirements listed above, provide monitoring/testing/recordkeeping/reporting which shall be used to demonstrate compliance. If the method is based on a permit or rule, include the condition number or citation. (Note: Each requirement listed above must have an associated method of demonstrating compliance. If there is not already a required method in place, then a method must be proposed.)

For the purposes of determining compliance with Section 5.1.1, the permittee shall monitor the total amount of coal transferred through both truck dumps at the Coal Truck Unloading Facility.
[45CSR13, R13-2034, 4.2.1.]
(Title V permit condition 5.2.1)

The emission points (i.e., enclosure openings as applicable) from the coal equipment as listed in Section 5.1. 9 shall be observed visually by an individual trained (not necessarily certified) per Method 22 at least each calendar month during periods of normal facility operation for a sufficient time interval to determine if any visible emissions are present. If visible emissions are observed for three (3) consecutive monthly observations, Method 9 tests (requires a certified observer) shall be conducted on those emission points having visible emissions within 48 hours or as soon as practicable from the last Method 22-like observation revealing visible emissions. The Method 9 tests shall be conducted during periods of normal facility operation. If any Method 9 test indicates opacity greater than 80% of the allowable visible emission requirement, Method 9 tests shall be conducted each calendar month for those emission points exceeding 80%. If any Method 9 test indicates opacity less than or equal to 80% of the allowable limit, the monthly Method 22-like observations may resume as previously described.
[45CSR§30-5.1.c.]
(Title V permit condition 5.3.1)

For the purposes of determining compliance with Section 5.1.1, the permittee shall maintain certified records of the total amount of coal transferred through both truck dumps at the Coal Truck Unloading Facility, as per Attachments A and B.
[45CSR13, R13-2034, 4.4.4.]
(Title V permit condition 5.4.1)

A record of each visible emissions observation as required in Section 5.3.1. shall be maintained, including any data required by 40 C.F.R. 60 Appendix A, Method 22 or Method 9, whichever is appropriate. The record shall include, at a minimum, the date, time, name of the emission unit, the applicable visible emissions requirement, the results of the observation, and the name of the observer.
[45CSR§30-5.1.c.]
(Title V permit condition 5.4.2)

Record of Maintenance of Air Pollution Control Equipment. For all pollution control equipment listed in Section 5.1.2, the permittee shall maintain accurate records of all required pollution control equipment inspection and/or preventative maintenance procedures.
[45CSR13, R13-2034, 4.4.2.]
(Title V permit condition 5.4.3)

Record of Malfunctions of Air Pollution Control Equipment. For all air pollution control equipment listed in Section 5.1.2, the permittee shall maintain records of the occurrence and duration of any malfunction or operational shutdown of the air pollution control equipment during which excess emissions occur. For each such case, the following information shall be recorded:
a. The equipment involved.
b. Steps taken to minimize emissions during the event.
c. The duration of the event.
d. The estimated increase in emissions during the event.
For each such case associated with an equipment malfunction, the additional information shall also be recorded:
e. The cause of the malfunction.
f. Steps taken to correct the malfunction.
g. Any changes or modifications to equipment or procedures that would help prevent future recurrences of the malfunction.
[45CSR13, R13-2034, 4.4.3.]
(Title V permit condition 5.4.4)

Are you in compliance with all applicable requirements for this emission unit? _X__Yes ___No

If no, complete the **Schedule of Compliance Form** as **ATTACHMENT F.**

ATTACHMENT E

SOURCES FOR EMISSION POINT MS24

TRANSFER CONVEYOR

(MTST-00-CS-CNV-S3a)

ATTACHMENT E - Emission Unit Form

Emission Unit Description

Emission unit ID number:	**Emission unit name:**	**List any control devices associated with this emission unit:**
MTST-00-CS-CNV-S3a	Source for emission point MS24	Partial Enclosure

Provide a description of the emission unit (type, method of operation, design parameters, etc.):
Transfer conveyor to Radial Stacker S-5 or Transfer Conveyor S-4

Manufacturer:	**Model number:**	**Serial number:**
Sedgman	2023-1101	2023-1101

Construction date:	**Installation date:**	**Modification date(s):**
2006	2006	N/A

Design Capacity (examples: furnaces - tons/hr, tanks - gallons):
1200 TPH

Maximum Hourly Throughput:	**Maximum Annual Throughput:**	**Maximum Operating Schedule:**
1200 TPH	2,500,000 TPY	8760 HPY

Fuel Usage Data **(fill out all applicable fields) NOT APPLICABLE**

Does this emission unit combust fuel? ___Yes _X__ No	**If yes, is it?** ___ Indirect Fired ___Direct Fired
Maximum design heat input and/or maximum horsepower rating: N/A	**Type and Btu/hr rating of burners:** N/A

List the primary fuel type(s) and if applicable, the secondary fuel type(s). For each fuel type listed, provide the maximum hourly and annual fuel usage for each.
N/A

Describe each fuel expected to be used during the term of the permit.

Fuel Type	Max. Sulfur Content	Max. Ash Content	BTU Value
N/A	N/A	N/A	N/A

Emissions Data		
Criteria Pollutants	Potential Emissions	
	PPH	TPY
Carbon Monoxide (CO)	N/A	N/A
Nitrogen Oxides (NO_X)	N/A	N/A
Lead (Pb)	N/A	N/A
Particulate Matter ($PM_{2.5}$)	N/A	N/A
Particulate Matter (PM_{10})	0.06	0.06
Total Particulate Matter (TSP)	0. 12	0.13
Sulfur Dioxide (SO_2)	N/A	N/A
Volatile Organic Compounds (VOC)	N/A	N/A
Hazardous Air Pollutants	Potential Emissions	
	PPH	TPY
	N/A	N/A
Regulated Pollutants other than Criteria and HAP	Potential Emissions	
	PPH	TPY
	N/A	N/A

List the method(s) used to calculate the potential emissions (include dates of any stack tests conducted, versions of software used, source and dates of emission factors, etc.).

See Emission Calculations in Attachment I.

Applicable Requirements

List all applicable requirements for this emission unit. For each applicable requirement, include the underlying rule/regulation citation and/or construction permit with the condition number. (*Note: Title V permit condition numbers alone are not the underlying applicable requirements*). If an emission limit is calculated based on the type of source and design capacity or if a standard is based on a design parameter, this information should also be included.

In accordance with the information filed in Permit Application R13-2034, the following methods of controlling particulate matter emissions from the transfer points shall be installed, maintained, and operated so as to minimize emissions:

Transfer Point ID No.	Transfer Point Description	Method of Controls
DP1	Coal Trucks dumping to Collection Bins	Windbreaks 6 feet high with sheet metal walls extending up from the windbreaks and tying into a removable truss type roof.
DP2	Vibrating Feeders to Conveyor S-1a	Transfer point is fully enclosed and is also located underground.
DP5	Conveyor S-1b to Conveyor S-2	Transfer point is fully enclosed and is located inside a full enclosure at the top of the silo.
DP6	Conveyor S-2 to Silo	Transfer point inside a fully enclosed silo
DP7	Silos to Belt Feeders	Transfer point is fully enclosed and is located inside a fully enclosed silo.
DP8	Belt Feeders to Conveyor P-1	Transfer point is fully enclosed and is located inside a full enclosure underneath the silos.
T1	Existing Truck Dump to existing Silo Feed (S-1a) to existing Conveyor S1-b or New Transfer Conveyor S-3a	Full Enclosure
T2	Transfer Conveyor S-3a to Radial Stacker S-5 or Transfer Conveyor S-4	Partial Enclosure
T3	Transfer Conveyor S-4 to Radial Stacker S-6	Partial Enclosure
T4	Radial Stacker S-5 or Radial Stacker S-6 to Pile	Partial Enclosure
T7	Bulldozer to New Reclaim Hoppers	Transfer point is located and controlled underground

T8	New Reclaim Hoppers to New Reclaim Coal Conveyor T	Underground
T9	New Reclaim Conveyor T to Existing P-1 Conveyor	Partial Enclosure / Underground
T10	New Transfer on P-1 Conveyor to P-2 Conveyor	Full Enclosure
T11	Transfer Conveyor C-SF-1 with associated transfer house	Partial Enclosure
T12	Transfer Conveyor C-SF-2 with associated transfer house	Partial Enclosure
T13	Raw Coal Stock Out Conveyor "R" (MTST-00-CS-CNV-R) with associated transfer house	Partial Enclosure

[45CSR§30-12.7., 45CSR13, R13-2034, 1.0.]
(Title V permit condition 5.1.2)

At all times except during periods of startup, shutdown, and malfunctions the visible emissions shall not exceed twenty percent (20%) opacity from the following equipment: coal conveyors, MTST-00-CS-CNV-R, -Q, -C2, -D, -H2, -J, -G, -C1, -H1, -S1a, S1b, -S3a, & -S2, the primary crushers MTST-00-CS-CRH-4 & -5, and the sample crushers MTST-00-CSS-CRH-B. In determining compliance with the particulate matter standard for opacity, Method 9 and the procedures in 40 C.F.R. § 60.11 shall be employed.
[45CSR16, 40 C.F.R. § 60.11 (c), 40 C.F.R. § 60.252 (c)]
(Title V permit condition 5.1.9)

At all times, including periods of startup, shutdown, and malfunction, any affected facility [coal equipment as listed in Section 5.1.9.] including associated air pollution control equipment shall, to the extent practicable, be maintained and operated in a manner consistent with good air pollution control practice for minimizing emissions. Determination that acceptable operating and maintenance procedures are being used, will be based on information available to the Secretary which may include, but is not limited to, monitoring results, opacity observations, review of operating and maintenance procedures, and inspection of the source.
[45CSR16, 40 C.F.R. § 60.11 (d)]
(Title V permit condition 5.1.10)

Operation and Maintenance of Air Pollution Control Equipment. The permittee shall, to the extent practicable, install, maintain, and operate all pollution control equipment listed in Section 5.1.2 and associated monitoring equipment in a manner consistent with safety and good air pollution control practices for minimizing emissions, or comply with any more stringent limits set forth in this permit or as set forth by any State rule, Federal regulation, or alternative control plan approved by the Secretary.
[45CSR13, R13-2034, 4.1.8.]
(Title V permit condition 5.1.11)

The permitted facility shall be constructed and operated in accordance with the plans and specifications filed in Permit Applications R13-2034, R13-2034A, R13-2034B, R13-2034C, and any modifications, administrative updates, or amendments thereto. The Secretary may suspend or revoke a permit if the plans and specifications upon which the approval was based are not adhered to.
[45CSR13, R13-2034, 2.5.1.]
(Title V permit condition 5.1.12)

__X__ Permit Shield

For all applicable requirements listed above, provide monitoring/testing/recordkeeping/reporting which shall be used to demonstrate compliance. If the method is based on a permit or rule, include the condition number or citation. (Note: Each requirement listed above must have an associated method of demonstrating compliance. If there is not already a required method in place, then a method must be proposed.)

The emission points (i.e., enclosure openings as applicable) from the coal equipment as listed in Section 5.1. 9 shall be observed visually by an individual trained (not necessarily certified) per Method 22 at least each calendar month during periods of normal facility operation for a sufficient time interval to determine if any visible emissions are present. If visible emissions are observed for three (3) consecutive monthly observations, Method 9 tests (requires a certified observer) shall be conducted on those emission points having visible emissions within 48 hours or as soon as practicable from the last Method 22-like observation revealing visible emissions. The Method 9 tests shall be conducted during periods of normal facility operation. If any Method 9 test indicates opacity greater than 80% of the allowable visible emission requirement, Method 9 tests shall be conducted each calendar month for those emission points exceeding 80%. If any Method 9 test indicates opacity less than or equal to 80% of the allowable limit, the monthly Method 22-like observations may resume as previously described.
[45CSR§30-5.1.c.]
(Title V permit condition 5.3.1)

A record of each visible emissions observation as required in Section 5.3.1. shall be maintained, including any data required by 40 C.F.R. 60 Appendix A, Method 22 or Method 9, whichever is appropriate. The record shall include, at a minimum, the date, time, name of the emission unit, the applicable visible emissions requirement, the results of the observation, and the name of the observer.
[45CSR§30-5.1.c.]
(Title V permit condition 5.4.2)

Record of Maintenance of Air Pollution Control Equipment. For all pollution control equipment listed in Section 5.1.2, the permittee shall maintain accurate records of all required pollution control equipment inspection and/or preventative maintenance procedures.
[45CSR13, R13-2034, 4.4.2.]
(Title V permit condition 5.4.3)

Record of Malfunctions of Air Pollution Control Equipment. For all air pollution control equipment listed in Section 5.1.2, the permittee shall maintain records of the occurrence and duration of any malfunction or operational shutdown of the air pollution control equipment during which excess emissions occur. For each such case, the following information shall be recorded:
a. The equipment involved.
b. Steps taken to minimize emissions during the event.
c. The duration of the event.
d. The estimated increase in emissions during the event.
For each such case associated with an equipment malfunction, the additional information shall also be recorded:
e. The cause of the malfunction.
f. Steps taken to correct the malfunction.
g. Any changes or modifications to equipment or procedures that would help prevent future recurrences of the malfunction.
[45CSR13, R13-2034, 4.4.3.]
(Title V permit condition 5.4.4)

Are you in compliance with all applicable requirements for this emission unit? _X__Yes ___No

If no, complete the **Schedule of Compliance Form** as **ATTACHMENT F.**

ATTACHMENT E

SOURCES FOR EMISSION POINT MS25

TRANSFER CONVEYOR

(MTST-00-CS-CNV-S4)

ATTACHMENT E - Emission Unit Form

Emission Unit Description

Emission unit ID number:	**Emission unit name:**	**List any control devices associated with this emission unit:**
MTST-00-CS-CNV-S4	Source for emission point MS25	Partial Enclosure

Provide a description of the emission unit (type, method of operation, design parameters, etc.):
Transfer conveyor S-4 to Radial Stacker S-6

Manufacturer:	**Model number:**	**Serial number:**
Sedgman	2023-1201	2023-1201

Construction date:	**Installation date:**	**Modification date(s):**
2006	2006	N/A

Design Capacity (examples: furnaces - tons/hr, tanks - gallons):
1200 TPH

Maximum Hourly Throughput:	**Maximum Annual Throughput:**	**Maximum Operating Schedule:**
1200 TPH	2,500,000 TPY	8760 HPY

Fuel Usage Data **(fill out all applicable fields) NOT APPLICABLE**

Does this emission unit combust fuel? ___Yes _X__ No	**If yes, is it?** ___ Indirect Fired ___Direct Fired
Maximum design heat input and/or maximum horsepower rating: N/A	**Type and Btu/hr rating of burners:** N/A

List the primary fuel type(s) and if applicable, the secondary fuel type(s). For each fuel type listed, provide the maximum hourly and annual fuel usage for each.
N/A

Describe each fuel expected to be used during the term of the permit.

Fuel Type	Max. Sulfur Content	Max. Ash Content	BTU Value
N/A	N/A	N/A	N/A

Emissions Data		
Criteria Pollutants	Potential Emissions	
	PPH	TPY
Carbon Monoxide (CO)	N/A	N/A
Nitrogen Oxides (NO_X)	N/A	N/A
Lead (Pb)	N/A	N/A
Particulate Matter ($PM_{2.5}$)	N/A	N/A
Particulate Matter (PM_{10})	0.06	0.06
Total Particulate Matter (TSP)	0.12	0.13
Sulfur Dioxide (SO_2)	N/A	N/A
Volatile Organic Compounds (VOC)	N/A	N/A
Hazardous Air Pollutants	Potential Emissions	
	PPH	TPY
	N/A	N/A
Regulated Pollutants other than Criteria and HAP	Potential Emissions	
	PPH	TPY
	N/A	N/A

List the method(s) used to calculate the potential emissions (include dates of any stack tests conducted, versions of software used, source and dates of emission factors, etc.).

See Emission Calculations in Attachment I.

Applicable Requirements

List all applicable requirements for this emission unit. For each applicable requirement, include the underlying rule/regulation citation and/or construction permit with the condition number. (*Note: Title V permit condition numbers alone are not the underlying applicable requirements*). If an emission limit is calculated based on the type of source and design capacity or if a standard is based on a design parameter, this information should also be included.

In accordance with the information filed in Permit Application R13-2034, the following methods of controlling particulate matter emissions from the transfer points shall be installed, maintained, and operated so as to minimize emissions:

Transfer Point ID No.	Transfer Point Description	Method of Controls
DP1	Coal Trucks dumping to Collection Bins	Windbreaks 6 feet high with sheet metal walls extending up from the windbreaks and tying into a removable truss type roof.
DP2	Vibrating Feeders to Conveyor S-1a	Transfer point is fully enclosed and is also located underground.
DP5	Conveyor S-1b to Conveyor S-2	Transfer point is fully enclosed and is located inside a full enclosure at the top of the silo.
DP6	Conveyor S-2 to Silo	Transfer point inside a fully enclosed silo
DP7	Silos to Belt Feeders	Transfer point is fully enclosed and is located inside a fully enclosed silo.
DP8	Belt Feeders to Conveyor P-1	Transfer point is fully enclosed and is located inside a full enclosure underneath the silos.
T1	Existing Truck Dump to existing Silo Feed (S-1a) to existing Conveyor S1-b or New Transfer Conveyor S-3a	Full Enclosure
T2	Transfer Conveyor S-3a to Radial Stacker S-5 or Transfer Conveyor S-4	Partial Enclosure
T3	Transfer Conveyor S-4 to Radial Stacker S-6	Partial Enclosure
T4	Radial Stacker S-5 or Radial Stacker S-6 to Pile	Partial Enclosure
T7	Bulldozer to New Reclaim Hoppers	Transfer point is located and controlled underground

T8	New Reclaim Hoppers to New Reclaim Coal Conveyor T	Underground
T9	New Reclaim Conveyor T to Existing P-1 Conveyor	Partial Enclosure / Underground
T10	New Transfer on P-1 Conveyor to P-2 Conveyor	Full Enclosure
T11	Transfer Conveyor C-SF-1 with associated transfer house	Partial Enclosure
T12	Transfer Conveyor C-SF-2 with associated transfer house	Partial Enclosure
T13	Raw Coal Stock Out Conveyor "R" (MTST-00-CS-CNV-R) with associated transfer house	Partial Enclosure

[45CSR§30-12.7., 45CSR13, R13-2034, 1.0.]
(Title V permit condition 5.1.2)

Operation and Maintenance of Air Pollution Control Equipment. The permittee shall, to the extent practicable, install, maintain, and operate all pollution control equipment listed in Section 5.1.2 and associated monitoring equipment in a manner consistent with safety and good air pollution control practices for minimizing emissions, or comply with any more stringent limits set forth in this permit or as set forth by any State rule, Federal regulation, or alternative control plan approved by the Secretary.
[45CSR13, R13-2034, 4.1.8.]
(Title V permit condition 5.1.11)

The permitted facility shall be constructed and operated in accordance with the plans and specifications filed in Permit Applications R13-2034, R13-2034A, R13-2034B, R13-2034C, and any modifications, administrative updates, or amendments thereto. The Secretary may suspend or revoke a permit if the plans and specifications upon which the approval was based are not adhered to.
[45CSR13, R13-2034, 2.5.1.]
(Title V permit condition 5.1.12)

__X__ Permit Shield

For all applicable requirements listed above, provide monitoring/testing/recordkeeping/reporting which shall be used to demonstrate compliance. If the method is based on a permit or rule, include the condition number or citation. (Note: Each requirement listed above must have an associated method of demonstrating compliance. If there is not already a required method in place, then a method must be proposed.)

A record of each visible emissions observation as required in Section 5.3.1. shall be maintained, including any data required by 40 C.F.R. 60 Appendix A, Method 22 or Method 9, whichever is appropriate. The record shall include, at a minimum, the date, time, name of the emission unit, the applicable visible emissions requirement, the results of the observation, and the name of the observer.
[45CSR§30-5.1.c.]
(Title V permit condition 5.4.2)

Record of Maintenance of Air Pollution Control Equipment. For all pollution control equipment listed in Section 5.1.2, the permittee shall maintain accurate records of all required pollution control equipment inspection and/or preventative maintenance procedures.
[45CSR13, R13-2034, 4.4.2.]
(Title V permit condition 5.4.3)

Record of Malfunctions of Air Pollution Control Equipment. For all air pollution control equipment listed in Section 5.1.2, the permittee shall maintain records of the occurrence and duration of any malfunction or operational shutdown of the air pollution control equipment during which excess emissions occur. For each such case, the following information shall be recorded:
a. The equipment involved.
b. Steps taken to minimize emissions during the event.
c. The duration of the event.
d. The estimated increase in emissions during the event.
For each such case associated with an equipment malfunction, the additional information shall also be recorded:
e. The cause of the malfunction.
f. Steps taken to correct the malfunction.
g. Any changes or modifications to equipment or procedures that would help prevent future recurrences of the malfunction.
[45CSR13, R13-2034, 4.4.3.]
(Title V permit condition 5.4.4)

Are you in compliance with all applicable requirements for this emission unit? _X_ Yes ___ No

If no, complete the **Schedule of Compliance Form** as **ATTACHMENT F.**

ATTACHMENT E

SOURCES FOR EMISSION POINT MS26

RADIAL STACKER

(MTST-00-CS-CNV-S5)

ATTACHMENT E - Emission Unit Form

Emission Unit Description

Emission unit ID number:	**Emission unit name:**	**List any control devices associated with this emission unit:**
MTST-00-CS-CNV-S5	Source for Emission point MS26	Partial Enclosure

Provide a description of the emission unit (type, method of operation, design parameters, etc.):
Radial Stacker conveyor to Open Pile 1 (OP-1)

Manufacturer:	**Model number:**	**Serial number:**
Beitzel Corporation	18331-G003-R1	18331-G003-R1
Construction date:	**Installation date:**	**Modification date(s):**
2006	2006	N/A

Design Capacity (examples: furnaces - tons/hr, tanks - gallons):
1200 TPH

Maximum Hourly Throughput:	**Maximum Annual Throughput:**	**Maximum Operating Schedule:**
1200 TPH	2,500,000 TPY	8760 HPY

Fuel Usage Data **(fill out all applicable fields) NOT APPLICABLE**

Does this emission unit combust fuel? ___Yes _X__ No	**If yes, is it?** ___ Indirect Fired ___Direct Fired
Maximum design heat input and/or maximum horsepower rating: N/A	**Type and Btu/hr rating of burners:** N/A

List the primary fuel type(s) and if applicable, the secondary fuel type(s). For each fuel type listed, provide the maximum hourly and annual fuel usage for each.
N/A

Describe each fuel expected to be used during the term of the permit.

Fuel Type	Max. Sulfur Content	Max. Ash Content	BTU Value
N/A	N/A	N/A	N/A

Emissions Data		
Criteria Pollutants	Potential Emissions	
	PPH	TPY
Carbon Monoxide (CO)	N/A	N/A
Nitrogen Oxides (NO_X)	N/A	N/A
Lead (Pb)	N/A	N/A
Particulate Matter ($PM_{2.5}$)	N/A	N/A
Particulate Matter (PM_{10})	0.06	0.06
Total Particulate Matter (TSP)	0.12	0.13
Sulfur Dioxide (SO_2)	N/A	N/A
Volatile Organic Compounds (VOC)	N/A	N/A

Hazardous Air Pollutants	Potential Emissions	
	PPH	TPY
	N/A	N/A	

Regulated Pollutants other than Criteria and HAP	Potential Emissions	
	PPH	TPY
	N/A	N/A	

List the method(s) used to calculate the potential emissions (include dates of any stack tests conducted, versions of software used, source and dates of emission factors, etc.).

See Emission Calculations in Attachment I.

T8	New Reclaim Hoppers to New Reclaim Coal Conveyor T	Underground
T9	New Reclaim Conveyor T to Existing P-1 Conveyor	Partial Enclosure / Underground
T10	New Transfer on P-1 Conveyor to P-2 Conveyor	Full Enclosure
T11	Transfer Conveyor C-SF-1 with associated transfer house	Partial Enclosure
T12	Transfer Conveyor C-SF-2 with associated transfer house	Partial Enclosure
T13	Raw Coal Stock Out Conveyor "R" (MTST-00-CS-CNV-R) with associated transfer house	Partial Enclosure

[45CSR§30-12.7., 45CSR13, R13-2034, 1.0.]
(Title V permit condition 5.1.2)

Operation and Maintenance of Air Pollution Control Equipment. The permittee shall, to the extent practicable, install, maintain, and operate all pollution control equipment listed in Section 5.1.2 and associated monitoring equipment in a manner consistent with safety and good air pollution control practices for minimizing emissions, or comply with any more stringent limits set forth in this permit or as set forth by any State rule, Federal regulation, or alternative control plan approved by the Secretary.
[45CSR13, R13-2034, 4.1.8.]
(Title V permit condition 5.1.11)

The permitted facility shall be constructed and operated in accordance with the plans and specifications filed in Permit Applications R13-2034, R13-2034A, R13-2034B, R13-2034C, and any modifications, administrative updates, or amendments thereto. The Secretary may suspend or revoke a permit if the plans and specifications upon which the approval was based are not adhered to.
[45CSR13, R13-2034, 2.5.1.]
(Title V permit condition 5.1.12)

__X__ Permit Shield

For all applicable requirements listed above, provide monitoring/testing/recordkeeping/reporting which shall be used to demonstrate compliance. If the method is based on a permit or rule, include the condition number or citation. (Note: Each requirement listed above must have an associated method of demonstrating compliance. If there is not already a required method in place, then a method must be proposed.)

Record of Maintenance of Air Pollution Control Equipment. For all pollution control equipment listed in Section 5.1.2, the permittee shall maintain accurate records of all required pollution control equipment inspection and/or preventative maintenance procedures.
[45CSR13, R13-2034, 4.4.2.]
(Title V permit condition 5.4.3)

Record of Malfunctions of Air Pollution Control Equipment. For all air pollution control equipment listed in Section 5.1.2, the permittee shall maintain records of the occurrence and duration of any malfunction or operational shutdown of the air pollution control equipment during which excess emissions occur. For each such case, the following information shall be recorded:
a. The equipment involved.
b. Steps taken to minimize emissions during the event.
c. The duration of the event.
d. The estimated increase in emissions during the event.
For each such case associated with an equipment malfunction, the additional information shall also be recorded:
e. The cause of the malfunction.
f. Steps taken to correct the malfunction.
g. Any changes or modifications to equipment or procedures that would help prevent future recurrences of the malfunction.
[45CSR13, R13-2034, 4.4.3.]
(Title V permit condition 5.4.4)

Are you in compliance with all applicable requirements for this emission unit? _X_ Yes ___ No

If no, complete the **Schedule of Compliance Form** as **ATTACHMENT F.**

ATTACHMENT E

SOURCES FOR EMISSION POINT MS27

FUEL STORAGE PILE

(OP-1)

ATTACHMENT E - Emission Unit Form

Emission Unit Description

Emission unit ID number:	**Emission unit name:**	**List any control devices associated with this emission unit:**
OP-1	Source for emission point MS27	None

Provide a description of the emission unit (type, method of operation, design parameters, etc.):
Fuel Storage pile 1 from Radial Stacker S-5

Manufacturer:	**Model number:**	**Serial number:**
N/A	N/A	N/A
Construction date:	**Installation date:**	**Modification date(s):**
2006	2006	N/A

Design Capacity (examples: furnaces - tons/hr, tanks - gallons):
1200 TPH and 2,500,000 TPY

Maximum Hourly Throughput:	**Maximum Annual Throughput:**	**Maximum Operating Schedule:**
1200 TPH	2,500,000 TPY	8760 HPY

Fuel Usage Data **(fill out all applicable fields) NOT APPLICABLE**

Does this emission unit combust fuel? ___Yes _X__ No	**If yes, is it?** ___ Indirect Fired ___Direct Fired
Maximum design heat input and/or maximum horsepower rating: N/A	**Type and Btu/hr rating of burners:** N/A

List the primary fuel type(s) and if applicable, the secondary fuel type(s). For each fuel type listed, provide the maximum hourly and annual fuel usage for each.
N/A

Describe each fuel expected to be used during the term of the permit.

Fuel Type	Max. Sulfur Content	Max. Ash Content	BTU Value
N/A	N/A	N/A	N/A

Emissions Data		
Criteria Pollutants	Potential Emissions	
	PPH	TPY
Carbon Monoxide (CO)	N/A	N/A
Nitrogen Oxides (NO_X)	N/A	N/A
Lead (Pb)	N/A	N/A
Particulate Matter ($PM_{2.5}$)	N/A	N/A
Particulate Matter (PM_{10})	0.06	0.06
Total Particulate Matter (TSP)	0.12	0.13
Sulfur Dioxide (SO_2)	N/A	N/A
Volatile Organic Compounds (VOC)	N/A	N/A
Hazardous Air Pollutants	Potential Emissions	
	PPH	TPY
	N/A	N/A
Regulated Pollutants other than Criteria and HAP	Potential Emissions	
	PPH	TPY
	N/A	N/A

List the method(s) used to calculate the potential emissions (include dates of any stack tests conducted, versions of software used, source and dates of emission factors, etc.).

See Emission Calculations in Attachment I.

MS26 and MS27 the identical drop point, therefore emissions listed for MS26 are representative of emissions for both emission points.

Applicable Requirements

List all applicable requirements for this emission unit. For each applicable requirement, include the underlying rule/regulation citation and/or construction permit with the condition number. (*Note: Title V permit condition numbers alone are not the underlying applicable requirements*). If an emission limit is calculated based on the type of source and design capacity or if a standard is based on a design parameter, this information should also be included.

The amount of coal through the two new raw coal stockpiles combined shall not exceed 2,400 tons per hour nor 2,500,000 tons per year.
[45CSR13, R13-2034, 4.1.6.]
(Title V permit condition 5.1.7)

The permitted facility shall be constructed and operated in accordance with the plans and specifications filed in Permit Applications R13-2034, R13-2034A, R13-2034B, R13-2034C, and any modifications, administrative updates, or amendments thereto. The Secretary may suspend or revoke a permit if the plans and specifications upon which the approval was based are not adhered to.
[45CSR13, R13-2034, 2.5.1.]
(Title V permit condition 5.1.12)

__X__ Permit Shield

For all applicable requirements listed above, provide monitoring/testing/recordkeeping/reporting which shall be used to demonstrate compliance. If the method is based on a permit or rule, include the condition number or citation. (Note: Each requirement listed above must have an associated method of demonstrating compliance. If there is not already a required method in place, then a method must be proposed.)

For the purposes of determining compliance with Section 5.1.7, the permittee shall monitor the total amount of coal transferred through each of the two new raw coal stockpiles.
[45CSR13, R13-2034, 4.2.2.]
(Title V permit condition 5.2.2)

For the purposes of determining compliance with Section 5.1.7, the permittee shall maintain certified records of the total amount of coal transferred through each of the two new raw coal stockpiles.
[45CSR13, R13-2034, 4.4.5.]
(Title V permit condition 5.4.5)

Are you in compliance with all applicable requirements for this emission unit? __X__ Yes ___No

If no, complete the **Schedule of Compliance Form** as **ATTACHMENT F.**

ATTACHMENT E

SOURCES FOR EMISSION POINT MS28

RADIAL STACKER

(MTST-00-CS-CNV-S6)

ATTACHMENT E - Emission Unit Form

Emission Unit Description

Emission unit ID number:	**Emission unit name:**	**List any control devices associated with this emission unit:**
MTST-00-CS-CNV-S6	Source for Emission point MS28	Partial Enclosure

Provide a description of the emission unit (type, method of operation, design parameters, etc.):
Radial Stacker conveyor to Open Pile 2 (OP-2)

Manufacturer:	**Model number:**	**Serial number:**
Beitzel Corporation	18331-G005	18331-G005
Construction date:	**Installation date:**	**Modification date(s):**
2006	2006	N/A

Design Capacity (examples: furnaces - tons/hr, tanks - gallons):
1200 TPH

Maximum Hourly Throughput:	**Maximum Annual Throughput:**	**Maximum Operating Schedule:**
1200 TPH	2,500,000 TPY	8760 HPY

Fuel Usage Data **(fill out all applicable fields) NOT APPLICABLE**

Does this emission unit combust fuel? ___Yes _X__ No	**If yes, is it?** ___ Indirect Fired ___Direct Fired
Maximum design heat input and/or maximum horsepower rating: N/A	**Type and Btu/hr rating of burners:** N/A

List the primary fuel type(s) and if applicable, the secondary fuel type(s). For each fuel type listed, provide the maximum hourly and annual fuel usage for each.
N/A

Describe each fuel expected to be used during the term of the permit.

Fuel Type	Max. Sulfur Content	Max. Ash Content	BTU Value
N/A	N/A	N/A	N/A

Emissions Data		
Criteria Pollutants	Potential Emissions	
	PPH	TPY
Carbon Monoxide (CO)	N/A	N/A
Nitrogen Oxides (NO_X)	N/A	N/A
Lead (Pb)	N/A	N/A
Particulate Matter ($PM_{2.5}$)	N/A	N/A
Particulate Matter (PM_{10})	0.06	0.06
Total Particulate Matter (TSP)	0.12	0.13
Sulfur Dioxide (SO_2)	N/A	N/A
Volatile Organic Compounds (VOC)	N/A	N/A
Hazardous Air Pollutants	Potential Emissions	
	PPH	TPY
	N/A	N/A
Regulated Pollutants other than Criteria and HAP	Potential Emissions	
	PPH	TPY
	N/A	N/A

List the method(s) used to calculate the potential emissions (include dates of any stack tests conducted, versions of software used, source and dates of emission factors, etc.).

See Emission Calculations in Attachment I.

Applicable Requirements

List all applicable requirements for this emission unit. For each applicable requirement, include the underlying rule/regulation citation and/or construction permit with the condition number. (*Note: Title V permit condition numbers alone are not the underlying applicable requirements*). If an emission limit is calculated based on the type of source and design capacity or if a standard is based on a design parameter, this information should also be included.

In accordance with the information filed in Permit Application R13-2034, the following methods of controlling particulate matter emissions from the transfer points shall be installed, maintained, and operated so as to minimize emissions:

Transfer Point ID No.	Transfer Point Description	Method of Controls
DP1	Coal Trucks dumping to Collection Bins	Windbreaks 6 feet high with sheet metal walls extending up from the windbreaks and tying into a removable truss type roof.
DP2	Vibrating Feeders to Conveyor S-1a	Transfer point is fully enclosed and is also located underground.
DP5	Conveyor S-1b to Conveyor S-2	Transfer point is fully enclosed and is located inside a full enclosure at the top of the silo.
DP6	Conveyor S-2 to Silo	Transfer point inside a fully enclosed silo
DP7	Silos to Belt Feeders	Transfer point is fully enclosed and is located inside a fully enclosed silo.
DP8	Belt Feeders to Conveyor P-1	Transfer point is fully enclosed and is located inside a full enclosure underneath the silos.
T1	Existing Truck Dump to existing Silo Feed (S-1a) to existing Conveyor S1-b or New Transfer Conveyor S-3a	Full Enclosure
T2	Transfer Conveyor S-3a to Radial Stacker S-5 or Transfer Conveyor S-4	Partial Enclosure
T3	Transfer Conveyor S-4 to Radial Stacker S-6	Partial Enclosure
T4	Radial Stacker S-5 or Radial Stacker S-6 to Pile	Partial Enclosure
T7	Bulldozer to New Reclaim Hoppers	Transfer point is located and controlled underground

T8	New Reclaim Hoppers to New Reclaim Coal Conveyor T	Underground
T9	New Reclaim Conveyor T to Existing P-1 Conveyor	Partial Enclosure / Underground
T10	New Transfer on P-1 Conveyor to P-2 Conveyor	Full Enclosure
T11	Transfer Conveyor C-SF-1 with associated transfer house	Partial Enclosure
T12	Transfer Conveyor C-SF-2 with associated transfer house	Partial Enclosure
T13	Raw Coal Stock Out Conveyor "R" (MTST-00-CS-CNV-R) with associated transfer house	Partial Enclosure

[45CSR§30-12.7., 45CSR13, R13-2034, 1.0.]
(Title V permit condition 5.1.2)

Operation and Maintenance of Air Pollution Control Equipment. The permittee shall, to the extent practicable, install, maintain, and operate all pollution control equipment listed in Section 5.1.2 and associated monitoring equipment in a manner consistent with safety and good air pollution control practices for minimizing emissions, or comply with any more stringent limits set forth in this permit or as set forth by any State rule, Federal regulation, or alternative control plan approved by the Secretary.
[45CSR13, R13-2034, 4.1.8.]
(Title V permit condition 5.1.11)

The permitted facility shall be constructed and operated in accordance with the plans and specifications filed in Permit Applications R13-2034, R13-2034A, R13-2034B, R13-2034C, and any modifications, administrative updates, or amendments thereto. The Secretary may suspend or revoke a permit if the plans and specifications upon which the approval was based are not adhered to.
[45CSR13, R13-2034, 2.5.1.]
(Title V permit condition 5.1.12)

__X__ Permit Shield

For all applicable requirements listed above, provide monitoring/testing/recordkeeping/reporting which shall be used to demonstrate compliance. If the method is based on a permit or rule, include the condition number or citation. (Note: Each requirement listed above must have an associated method of demonstrating compliance. If there is not already a required method in place, then a method must be proposed.)

Record of Maintenance of Air Pollution Control Equipment. For all pollution control equipment listed in Section 5.1.2, the permittee shall maintain accurate records of all required pollution control equipment inspection and/or preventative maintenance procedures.
[45CSR13, R13-2034, 4.4.2.]
(Title V permit condition 5.4.3)

Record of Malfunctions of Air Pollution Control Equipment. For all air pollution control equipment listed in Section 5.1.2, the permittee shall maintain records of the occurrence and duration of any malfunction or operational shutdown of the air pollution control equipment during which excess emissions occur. For each such case, the following information shall be recorded:
a. The equipment involved.
b. Steps taken to minimize emissions during the event.
c. The duration of the event.
d. The estimated increase in emissions during the event.
For each such case associated with an equipment malfunction, the additional information shall also be recorded:
e. The cause of the malfunction.
f. Steps taken to correct the malfunction.
g. Any changes or modifications to equipment or procedures that would help prevent future recurrences of the malfunction.
[45CSR13, R13-2034, 4.4.3.]
(Title V permit condition 5.4.4)

Are you in compliance with all applicable requirements for this emission unit? _X_ Yes ___ No

If no, complete the **Schedule of Compliance Form** as **ATTACHMENT F.**

ATTACHMENT E

SOURCES FOR EMISSION POINT MS29

FUEL STORAGE

(OP-2)

ATTACHMENT E - Emission Unit Form

Emission Unit Description

Emission unit ID number:	**Emission unit name:**	**List any control devices associated with this emission unit:**
OP-2	Source for emission point MS29	None

Provide a description of the emission unit (type, method of operation, design parameters, etc.):
Fuel Storage pile 2 from Radial Stacker S-6

Manufacturer:	**Model number:**	**Serial number:**
N/A	N/A	N/A
Construction date:	**Installation date:**	**Modification date(s):**
2006	2006	N/A

Design Capacity (examples: furnaces - tons/hr, tanks - gallons):
1200 TPH and 2,500,000 TPY

Maximum Hourly Throughput:	**Maximum Annual Throughput:**	**Maximum Operating Schedule:**
1200 TPH	2,500,000 TPY	8760 HPY

Fuel Usage Data **(fill out all applicable fields) NOT APPLICABLE**

Does this emission unit combust fuel? ___Yes _X__ No	**If yes, is it?** ___ Indirect Fired ___Direct Fired
Maximum design heat input and/or maximum horsepower rating: N/A	**Type and Btu/hr rating of burners:** N/A

List the primary fuel type(s) and if applicable, the secondary fuel type(s). For each fuel type listed, provide the maximum hourly and annual fuel usage for each.
N/A

Describe each fuel expected to be used during the term of the permit.

Fuel Type	Max. Sulfur Content	Max. Ash Content	BTU Value
N/A	N/A	N/A	N/A

Emissions Data		
Criteria Pollutants	Potential Emissions	
	PPH	TPY
Carbon Monoxide (CO)	N/A	N/A
Nitrogen Oxides (NO_X)	N/A	N/A
Lead (Pb)	N/A	N/A
Particulate Matter ($PM_{2.5}$)	N/A	N/A
Particulate Matter (PM_{10})	0.06	0.06
Total Particulate Matter (TSP)	0.12	0.13
Sulfur Dioxide (SO_2)	N/A	N/A
Volatile Organic Compounds (VOC)	N/A	N/A
Hazardous Air Pollutants	Potential Emissions	
	PPH	TPY
	N/A	N/A
Regulated Pollutants other than Criteria and HAP	Potential Emissions	
	PPH	TPY
	N/A	N/A

List the method(s) used to calculate the potential emissions (include dates of any stack tests conducted, versions of software used, source and dates of emission factors, etc.).

See Emission Calculations in Attachment I.

MS28 and MS29 the identical drop point, therefore emissions listed for MS28 are representitve of emissions for both emission points.

Applicable Requirements

List all applicable requirements for this emission unit. For each applicable requirement, include the underlying rule/regulation citation and/or construction permit with the condition number. (*Note: Title V permit condition numbers alone are not the underlying applicable requirements*). If an emission limit is calculated based on the type of source and design capacity or if a standard is based on a design parameter, this information should also be included.

The amount of coal through the two new raw coal stockpiles combined shall not exceed 2,400 tons per hour nor 2,500,000 tons per year.
[45CSR13, R13-2034, 4.1.6.]
(Title V permit condition 5.1.7)

The permitted facility shall be constructed and operated in accordance with the plans and specifications filed in Permit Applications R13-2034, R13-2034A, R13-2034B, R13-2034C, and any modifications, administrative updates, or amendments thereto. The Secretary may suspend or revoke a permit if the plans and specifications upon which the approval was based are not adhered to.
[45CSR13, R13-2034, 2.5.1.]
(Title V permit condition 5.1.12)

_X_ Permit Shield

For all applicable requirements listed above, provide monitoring/testing/recordkeeping/reporting which shall be used to demonstrate compliance. If the method is based on a permit or rule, include the condition number or citation. (Note: Each requirement listed above must have an associated method of demonstrating compliance. If there is not already a required method in place, then a method must be proposed.)

For the purposes of determining compliance with Section 5.1.7, the permittee shall monitor the total amount of coal transferred through each of the two new raw coal stockpiles.
[45CSR13, R13-2034, 4.2.2.]
(Title V permit condition 5.2.2)

For the purposes of determining compliance with Section 5.1.7, the permittee shall maintain certified records of the total amount of coal transferred through each of the two new raw coal stockpiles.
[45CSR13, R13-2034, 4.4.5.]
(Title V permit condition 5.4.5)

Are you in compliance with all applicable requirements for this emission unit? _X_ Yes ___ No

If no, complete the **Schedule of Compliance Form** as **ATTACHMENT F.**

ATTACHMENT E

SOURCES FOR EMISSION POINT MS30

BULLDOZER

(BD-T7)

ATTACHMENT E - Emission Unit Form

Emission Unit Description

Emission unit ID number:	**Emission unit name:**	**List any control devices associated with this emission unit:**
BD-T7	Source for emission point MS30	Underground

Provide a description of the emission unit (type, method of operation, design parameters, etc.):
Bulldozer to Reclaim feeders on OP-1 and OP-2

Manufacturer:	**Model number:**	**Serial number:**
Caterpillar	D9	7TL-01201
Construction date:	**Installation date:**	**Modification date(s):**
N/A	2006	N/A

Design Capacity (examples: furnaces - tons/hr, tanks - gallons):
216 gallons of fuel

Maximum Hourly Throughput:	**Maximum Annual Throughput:**	**Maximum Operating Schedule:**
19.5 hours	7150 hours	7150 hours

Fuel Usage Data **(fill out all applicable fields)**

Does this emission unit combust fuel? _X_ Yes ___ No	**If yes, is it?** ___ Indirect Fired ___Direct Fired
Maximum design heat input and/or maximum horsepower rating: 410 HP	**Type and Btu/hr rating of burners:** N/A

List the primary fuel type(s) and if applicable, the secondary fuel type(s). For each fuel type listed, provide the maximum hourly and annual fuel usage for each.
Ultra Low Sulfur Off road Diesel Fuel

Describe each fuel expected to be used during the term of the permit.

Fuel Type	Max. Sulfur Content	Max. Ash Content	BTU Value
Diesel	N/A	N/A	N/A

Emissions Data		
Criteria Pollutants	Potential Emissions	
	PPH	TPY
Carbon Monoxide (CO)	N/A	N/A
Nitrogen Oxides (NO_X)	N/A	N/A
Lead (Pb)	N/A	N/A
Particulate Matter ($PM_{2.5}$)	N/A	N/A
Particulate Matter (PM_{10})	0.06	0.06
Total Particulate Matter (TSP)	0.12	0.13
Sulfur Dioxide (SO_2)	N/A	N/A
Volatile Organic Compounds (VOC)	N/A	N/A
Hazardous Air Pollutants	Potential Emissions	
	PPH	TPY
	N/A	N/A
Regulated Pollutants other than Criteria and HAP	Potential Emissions	
	PPH	TPY
	N/A	N/A

List the method(s) used to calculate the potential emissions (include dates of any stack tests conducted, versions of software used, source and dates of emission factors, etc.).

See Emission Calculations in Attachment I.

Applicable Requirements

List all applicable requirements for this emission unit. For each applicable requirement, include the underlying rule/regulation citation and/or construction permit with the condition number. (*Note: Title V permit condition numbers alone are not the underlying applicable requirements*). If an emission limit is calculated based on the type of source and design capacity or if a standard is based on a design parameter, this information should also be included.

In accordance with the information filed in Permit Application R13-2034, the following methods of controlling particulate matter emissions from the transfer points shall be installed, maintained, and operated so as to minimize emissions:

Transfer Point ID No.	Transfer Point Description	Method of Controls
DP1	Coal Trucks dumping to Collection Bins	Windbreaks 6 feet high with sheet metal walls extending up from the windbreaks and tying into a removable truss type roof.
DP2	Vibrating Feeders to Conveyor S-1a	Transfer point is fully enclosed and is also located underground.
DP5	Conveyor S-1b to Conveyor S-2	Transfer point is fully enclosed and is located inside a full enclosure at the top of the silo.
DP6	Conveyor S-2 to Silo	Transfer point inside a fully enclosed silo
DP7	Silos to Belt Feeders	Transfer point is fully enclosed and is located inside a fully enclosed silo.
DP8	Belt Feeders to Conveyor P-1	Transfer point is fully enclosed and is located inside a full enclosure underneath the silos.
T1	Existing Truck Dump to existing Silo Feed (S-1a) to existing Conveyor S1-b or New Transfer Conveyor S-3a	Full Enclosure
T2	Transfer Conveyor S-3a to Radial Stacker S-5 or Transfer Conveyor S-4	Partial Enclosure
T3	Transfer Conveyor S-4 to Radial Stacker S-6	Partial Enclosure
T4	Radial Stacker S-5 or Radial Stacker S-6 to Pile	Partial Enclosure
T7	Bulldozer to New Reclaim Hoppers	Transfer point is located and controlled underground

T8	New Reclaim Hoppers to New Reclaim Coal Conveyor T	Underground
T9	New Reclaim Conveyor T to Existing P-1 Conveyor	Partial Enclosure / Underground
T10	New Transfer on P-1 Conveyor to P-2 Conveyor	Full Enclosure
T11	Transfer Conveyor C-SF-1 with associated transfer house	Partial Enclosure
T12	Transfer Conveyor C-SF-2 with associated transfer house	Partial Enclosure
T13	Raw Coal Stock Out Conveyor "R" (MTST-00-CS-CNV-R) with associated transfer house	Partial Enclosure

[45CSR§30-12.7., 45CSR13, R13-2034, 1.0.]
(Title V permit condition 5.1.2)

The Bulldozer working the new Reclaim Hoppers #1 and #2 shall not operate more than 7,150 hours per year based on a rolling yearly total.
[45CSR13, R13-2034, 4.1.7.]
(Title V permit condition 5.1.8)

Operation and Maintenance of Air Pollution Control Equipment. The permittee shall, to the extent practicable, install, maintain, and operate all pollution control equipment listed in Section 5.1.2 and associated monitoring equipment in a manner consistent with safety and good air pollution control practices for minimizing emissions, or comply with any more stringent limits set forth in this permit or as set forth by any State rule, Federal regulation, or alternative control plan approved by the Secretary.
[45CSR13, R13-2034, 4.1.8.]
(Title V permit condition 5.1.11)

The permitted facility shall be constructed and operated in accordance with the plans and specifications filed in Permit Applications R13-2034, R13-2034A, R13-2034B, R13-2034C, and any modifications, administrative updates, or amendments thereto. The Secretary may suspend or revoke a permit if the plans and specifications upon which the approval was based are not adhered to.
[45CSR13, R13-2034, 2.5.1.]
(Title V permit condition 5.1.12)

__X__ Permit Shield

For all applicable requirements listed above, provide monitoring/testing/recordkeeping/reporting which shall be used to demonstrate compliance. If the method is based on a permit or rule, include the condition number or citation. (Note: Each requirement listed above must have an associated method of demonstrating compliance. If there is not already a required method in place, then a method must be proposed.)

For the purposes of determining compliance with Section 5.1.8, the permittee shall monitor the number of hours of dozer operation each month.
[45CSR13, R13-2034, 4.2.3.]
(Title V permit condition 5.2.3)

Record of Maintenance of Air Pollution Control Equipment. For all pollution control equipment listed in Section 5.1.2, the permittee shall maintain accurate records of all required pollution control equipment inspection and/or preventative maintenance procedures.
[45CSR13, R13-2034, 4.4.2.]
(Title V permit condition 5.4.3)

Record of Malfunctions of Air Pollution Control Equipment. For all air pollution control equipment listed in Section 5.1.2, the permittee shall maintain records of the occurrence and duration of any malfunction or operational shutdown of the air pollution control equipment during which excess emissions occur. For each such case, the following information shall be recorded:
a. The equipment involved.
b. Steps taken to minimize emissions during the event.
c. The duration of the event.
d. The estimated increase in emissions during the event.
For each such case associated with an equipment malfunction, the additional information shall also be recorded:
e. The cause of the malfunction.
f. Steps taken to correct the malfunction.
g. Any changes or modifications to equipment or procedures that would help prevent future recurrences of the malfunction.
[45CSR13, R13-2034, 4.4.3.]
(Title V permit condition 5.4.4)

For the purposes of determining compliance with Section 5.1.8, the permittee shall maintain certified records of the number of hours of bulldozer operation on a monthly basis.
[45CSR13, R13-2034, 4.4.6.]
(Title V permit condition 5.4.6)

Are you in compliance with all applicable requirements for this emission unit? _X_ Yes ___ No

If no, complete the **Schedule of Compliance Form** as **ATTACHMENT F**.

ATTACHMENT E

SOURCES FOR EMISSION POINT MS31

RECLAIM FEEDER

(MTST-00-CS-FDR-1, MTST-00-CS-FDR-2)

ATTACHMENT E - Emission Unit Form

Emission Unit Description

Emission unit ID number:	**Emission unit name:**	**List any control devices associated with this emission unit:**
MTST-00-CS-FDR-1 MTST-00-CS-FDR-2	Sources for emission point MS31	MTST-00-CS-FDR-1: Underground MTST-00-CS-FDR-2: Underground

Provide a description of the emission unit (type, method of operation, design parameters, etc.):
Reclaim feeders to Reclaim coal conveyor T

Manufacturer:	**Model number:**	**Serial number:**
MTST-00-CS-FDR-1: Carman Industries, Inc. MTST-00-CS-FDR-2: Carman Industries, Inc.	MTST-00-CS-FDR-1: 8GDH MTST-00-CS-FDR-2: 8GDH	MTST-00-CS-FDR-1: GDH-13484 MTST-00-CS-FDR-2: GDH-13485

Construction date:	**Installation date:**	**Modification date(s):**
MTST-00-CS-FDR-1: 2006 MTST-00-CS-FDR-2: 2006	MTST-00-CS-FDR-1: 2006 MTST-00-CS-FDR-2: 2006	MTST-00-CS-FDR-1: N/A MTST-00-CS-FDR-2: N/A

Design Capacity (examples: furnaces - tons/hr, tanks - gallons):
MTST-00-CS-FDR-1: 1000 TPH
MTST-00-CS-FDR-2: 1000 TPH

Maximum Hourly Throughput:	**Maximum Annual Throughput:**	**Maximum Operating Schedule:**
MTST-00-CS-FDR-1:1000 TPH MTST-00-CS-FDR-2: 1000 TPH	MTST-00-CS-FDR-1: 2,500,000 TPY MTST-00-CS-FDR-2: 2,500,000 TPY	MTST-00-CS-FDR-1: 8760 HPY MTST-00-CS-FDR-2: 8760 HPY

Fuel Usage Data **(fill out all applicable fields) NOT APPLICABLE**

Does this emission unit combust fuel? ___Yes _X__ No	**If yes, is it?** ___ Indirect Fired ___Direct Fired
Maximum design heat input and/or maximum horsepower rating: N/A	**Type and Btu/hr rating of burners:** N/A

List the primary fuel type(s) and if applicable, the secondary fuel type(s). For each fuel type listed, provide the maximum hourly and annual fuel usage for each.
N/A

Describe each fuel expected to be used during the term of the permit.

Fuel Type	Max. Sulfur Content	Max. Ash Content	BTU Value
N/A	N/A	N/A	N/A

Emissions Data		
Criteria Pollutants	Potential Emissions	
	PPH	TPY
Carbon Monoxide (CO)	N/A	N/A
Nitrogen Oxides (NO_X)	N/A	N/A
Lead (Pb)	N/A	N/A
Particulate Matter ($PM_{2.5}$)	N/A	N/A
Particulate Matter (PM_{10})	0.00	0.01
Total Particulate Matter (TSP)	0.01	0.01
Sulfur Dioxide (SO_2)	N/A	N/A
Volatile Organic Compounds (VOC)	N/A	N/A
Hazardous Air Pollutants	Potential Emissions	
	PPH	TPY
	N/A	N/A
Regulated Pollutants other than Criteria and HAP	Potential Emissions	
	PPH	TPY
	N/A	N/A

List the method(s) used to calculate the potential emissions (include dates of any stack tests conducted, versions of software used, source and dates of emission factors, etc.).

See Emission Calculations in Attachment I.

Applicable Requirements

List all applicable requirements for this emission unit. For each applicable requirement, include the underlying rule/regulation citation and/or construction permit with the condition number. (*Note: Title V permit condition numbers alone are not the underlying applicable requirements*). If an emission limit is calculated based on the type of source and design capacity or if a standard is based on a design parameter, this information should also be included.

In accordance with the information filed in Permit Application R13-2034, the following methods of controlling particulate matter emissions from the transfer points shall be installed, maintained, and operated so as to minimize emissions:

Transfer Point ID No.	Transfer Point Description	Method of Controls
DP1	Coal Trucks dumping to Collection Bins	Windbreaks 6 feet high with sheet metal walls extending up from the windbreaks and tying into a removable truss type roof.
DP2	Vibrating Feeders to Conveyor S-1a	Transfer point is fully enclosed and is also located underground.
DP5	Conveyor S-1b to Conveyor S-2	Transfer point is fully enclosed and is located inside a full enclosure at the top of the silo.
DP6	Conveyor S-2 to Silo	Transfer point inside a fully enclosed silo
DP7	Silos to Belt Feeders	Transfer point is fully enclosed and is located inside a fully enclosed silo.
DP8	Belt Feeders to Conveyor P-1	Transfer point is fully enclosed and is located inside a full enclosure underneath the silos.
T1	Existing Truck Dump to existing Silo Feed (S-1a) to existing Conveyor S1-b or New Transfer Conveyor S-3a	Full Enclosure
T2	Transfer Conveyor S-3a to Radial Stacker S-5 or Transfer Conveyor S-4	Partial Enclosure
T3	Transfer Conveyor S-4 to Radial Stacker S-6	Partial Enclosure
T4	Radial Stacker S-5 or Radial Stacker S-6 to Pile	Partial Enclosure
T7	Bulldozer to New Reclaim Hoppers	Transfer point is located and controlled underground

T8	New Reclaim Hoppers to New Reclaim Coal Conveyor T	Underground
T9	New Reclaim Conveyor T to Existing P-1 Conveyor	Partial Enclosure / Underground
T10	New Transfer on P-1 Conveyor to P-2 Conveyor	Full Enclosure
T11	Transfer Conveyor C-SF-1 with associated transfer house	Partial Enclosure
T12	Transfer Conveyor C-SF-2 with associated transfer house	Partial Enclosure
T13	Raw Coal Stock Out Conveyor "R" (MTST-00-CS-CNV-R) with associated transfer house	Partial Enclosure

[45CSR§30-12.7., 45CSR13, R13-2034, 1.0.]
(Title V permit condition 5.1.2)

Operation and Maintenance of Air Pollution Control Equipment. The permittee shall, to the extent practicable, install, maintain, and operate all pollution control equipment listed in Section 5.1.2 and associated monitoring equipment in a manner consistent with safety and good air pollution control practices for minimizing emissions, or comply with any more stringent limits set forth in this permit or as set forth by any State rule, Federal regulation, or alternative control plan approved by the Secretary.
[45CSR13, R13-2034, 4.1.8.]
(Title V permit condition 5.1.11)

The permitted facility shall be constructed and operated in accordance with the plans and specifications filed in Permit Applications R13-2034, R13-2034A, R13-2034B, R13-2034C, and any modifications, administrative updates, or amendments thereto. The Secretary may suspend or revoke a permit if the plans and specifications upon which the approval was based are not adhered to.
[45CSR13, R13-2034, 2.5.1.]
(Title V permitcondition 5.1.12)

__X__ Permit Shield

For all applicable requirements listed above, provide monitoring/testing/recordkeeping/reporting which shall be used to demonstrate compliance. If the method is based on a permit or rule, include the condition number or citation. (Note: Each requirement listed above must have an associated method of demonstrating compliance. If there is not already a required method in place, then a method must be proposed.)

Record of Maintenance of Air Pollution Control Equipment. For all pollution control equipment listed in Section 5.1.2, the permittee shall maintain accurate records of all required pollution control equipment inspection and/or preventative maintenance procedures.
[45CSR13, R13-2034, 4.4.2.]
(Title V permit condition 5.4.3)

Record of Malfunctions of Air Pollution Control Equipment. For all air pollution control equipment listed in Section 5.1.2, the permittee shall maintain records of the occurrence and duration of any malfunction or operational shutdown of the air pollution control equipment during which excess emissions occur. For each such case, the following information shall be recorded:
a. The equipment involved.
b. Steps taken to minimize emissions during the event.
c. The duration of the event.
d. The estimated increase in emissions during the event.
For each such case associated with an equipment malfunction, the additional information shall also be recorded:
e. The cause of the malfunction.
f. Steps taken to correct the malfunction.
g. Any changes or modifications to equipment or procedures that would help prevent future recurrences of the malfunction.
[45CSR13, R13-2034, 4.4.3.]
(Title V permit condition 5.4.4)

Are you in compliance with all applicable requirements for this emission unit? _X_ Yes ___ No

If no, complete the **Schedule of Compliance Form** as **ATTACHMENT F.**

ATTACHMENT E

SOURCES FOR EMISSION POINT MS32

RECLAIM CONVEYOR

(MTST-00-CS-CNV-T)

ATTACHMENT E - Emission Unit Form

Emission Unit Description

Emission unit ID number:	**Emission unit name:**	**List any control devices associated with this emission unit:**
MTST-00-CS-CNV-T	Source for emission point MS32	Underground/Partial Enclosure

Provide a description of the emission unit (type, method of operation, design parameters, etc.):
Reclaim Conveyor to Conveyor P-1

Manufacturer:	**Model number:**	**Serial number:**
Sedgman	2023-0601	2023-0601
Construction date:	**Installation date:**	**Modification date(s):**
2006	2006	N/A

Design Capacity (examples: furnaces - tons/hr, tanks - gallons):
1200 TPH

Maximum Hourly Throughput:	**Maximum Annual Throughput:**	**Maximum Operating Schedule:**
1200 TPH	2,500,000 TPY	8760 HPY

Fuel Usage Data **(fill out all applicable fields) NOT APPLICABLE**

Does this emission unit combust fuel? ___Yes _X__ No	**If yes, is it?** ___ Indirect Fired ___Direct Fired
Maximum design heat input and/or maximum horsepower rating: N/A	**Type and Btu/hr rating of burners:** N/A

List the primary fuel type(s) and if applicable, the secondary fuel type(s). For each fuel type listed, provide the maximum hourly and annual fuel usage for each.
N/A

Describe each fuel expected to be used during the term of the permit.

Fuel Type	Max. Sulfur Content	Max. Ash Content	BTU Value
N/A	N/A	N/A	N/A

Emissions Data		
Criteria Pollutants	Potential Emissions	
	PPH	TPY
Carbon Monoxide (CO)	N/A	N/A
Nitrogen Oxides (NO_X)	N/A	N/A
Lead (Pb)	N/A	N/A
Particulate Matter ($PM_{2.5}$)	N/A	N/A
Particulate Matter (PM_{10})	0.01	0.01
Total Particulate Matter (TSP)	0.01	0.01
Sulfur Dioxide (SO_2)	N/A	N/A
Volatile Organic Compounds (VOC)	N/A	N/A
Hazardous Air Pollutants	Potential Emissions	
	PPH	TPY
	N/A	N/A
Regulated Pollutants other than Criteria and HAP	Potential Emissions	
	PPH	TPY
	N/A	N/A

List the method(s) used to calculate the potential emissions (include dates of any stack tests conducted, versions of software used, source and dates of emission factors, etc.).

See Emission Calculations in Attachment I.

Applicable Requirements

List all applicable requirements for this emission unit. For each applicable requirement, include the underlying rule/regulation citation and/or construction permit with the condition number. (*Note: Title V permit condition numbers alone are not the underlying applicable requirements*). If an emission limit is calculated based on the type of source and design capacity or if a standard is based on a design parameter, this information should also be included.

In accordance with the information filed in Permit Application R13-2034, the following methods of controlling particulate matter emissions from the transfer points shall be installed, maintained, and operated so as to minimize emissions:

Transfer Point ID No.	Transfer Point Description	Method of Controls
DP1	Coal Trucks dumping to Collection Bins	Windbreaks 6 feet high with sheet metal walls extending up from the windbreaks and tying into a removable truss type roof.
DP2	Vibrating Feeders to Conveyor S-1a	Transfer point is fully enclosed and is also located underground.
DP5	Conveyor S-1b to Conveyor S-2	Transfer point is fully enclosed and is located inside a full enclosure at the top of the silo.
DP6	Conveyor S-2 to Silo	Transfer point inside a fully enclosed silo
DP7	Silos to Belt Feeders	Transfer point is fully enclosed and is located inside a fully enclosed silo.
DP8	Belt Feeders to Conveyor P-1	Transfer point is fully enclosed and is located inside a full enclosure underneath the silos.
T1	Existing Truck Dump to existing Silo Feed (S-1a) to existing Conveyor S1-b or New Transfer Conveyor S-3a	Full Enclosure
T2	Transfer Conveyor S-3a to Radial Stacker S-5 or Transfer Conveyor S-4	Partial Enclosure
T3	Transfer Conveyor S-4 to Radial Stacker S-6	Partial Enclosure
T4	Radial Stacker S-5 or Radial Stacker S-6 to Pile	Partial Enclosure
T7	Bulldozer to New Reclaim Hoppers	Transfer point is located and controlled underground

T8	New Reclaim Hoppers to New Reclaim Coal Conveyor T	Underground
T9	New Reclaim Conveyor T to Existing P-1 Conveyor	Partial Enclosure / Underground
T10	New Transfer on P-1 Conveyor to P-2 Conveyor	Full Enclosure
T11	Transfer Conveyor C-SF-1 with associated transfer house	Partial Enclosure
T12	Transfer Conveyor C-SF-2 with associated transfer house	Partial Enclosure
T13	Raw Coal Stock Out Conveyor "R" (MTST-00-CS-CNV-R) with associated transfer house	Partial Enclosure

[45CSR§30-12.7., 45CSR13, R13-2034, 1.0.]
(Title V permit condition 5.1.2)

Operation and Maintenance of Air Pollution Control Equipment. The permittee shall, to the extent practicable, install, maintain, and operate all pollution control equipment listed in Section 5.1.2 and associated monitoring equipment in a manner consistent with safety and good air pollution control practices for minimizing emissions, or comply with any more stringent limits set forth in this permit or as set forth by any State rule, Federal regulation, or alternative control plan approved by the Secretary.
[45CSR13, R13-2034, 4.1.8.]
(Title V permit condition 5.1.11)

The permitted facility shall be constructed and operated in accordance with the plans and specifications filed in Permit Applications R13-2034, R13-2034A, R13-2034B, R13-2034C, and any modifications, administrative updates, or amendments thereto. The Secretary may suspend or revoke a permit if the plans and specifications upon which the approval was based are not adhered to.
[45CSR13, R13-2034, 2.5.1.]
(Title V permit condition 5.1.12)

__X__ Permit Shield

For all applicable requirements listed above, provide monitoring/testing/recordkeeping/reporting which shall be used to demonstrate compliance. If the method is based on a permit or rule, include the condition number or citation. (Note: Each requirement listed above must have an associated method of demonstrating compliance. If there is not already a required method in place, then a method must be proposed.)

Record of Maintenance of Air Pollution Control Equipment. For all pollution control equipment listed in Section 5.1.2, the permittee shall maintain accurate records of all required pollution control equipment inspection and/or preventative maintenance procedures.
[45CSR13, R13-2034, 4.4.2.]
(Title V permit condition 5.4.3)

Record of Malfunctions of Air Pollution Control Equipment. For all air pollution control equipment listed in Section 5.1.2, the permittee shall maintain records of the occurrence and duration of any malfunction or operational shutdown of the air pollution control equipment during which excess emissions occur. For each such case, the following information shall be recorded:
a. The equipment involved.
b. Steps taken to minimize emissions during the event.
c. The duration of the event.
d. The estimated increase in emissions during the event.
For each such case associated with an equipment malfunction, the additional information shall also be recorded:
e. The cause of the malfunction.
f. Steps taken to correct the malfunction.
g. Any changes or modifications to equipment or procedures that would help prevent future recurrences of the malfunction.
[45CSR13, R13-2034, 4.4.3.]
(Title V permit condition 5.4.4)

Are you in compliance with all applicable requirements for this emission unit? __X__ Yes ___No

If no, complete the **Schedule of Compliance Form** as **ATTACHMENT F.**

ATTACHMENT E

SOURCES FOR EMISSION POINT MS33

NEW TRANSFER

(MTST-00-CS-CNV-P2)

ATTACHMENT E - Emission Unit Form

Emission Unit Description

Emission unit ID number:	**Emission unit name:**	**List any control devices associated with this emission unit:**
MTST-00-CS-CNV-P2	Source for emission point MS33	Full Enclosure

Provide a description of the emission unit (type, method of operation, design parameters, etc.):
Transfer conveyor to Conveyor SF-1 or SF-2

Manufacturer:	**Model number:**	**Serial number:**
Sedgman	2023-1001	2023-1011
Construction date:	**Installation date:**	**Modification date(s):**
2006	2006	N/A

Design Capacity (examples: furnaces - tons/hr, tanks - gallons):
1600 TPH

Maximum Hourly Throughput:	**Maximum Annual Throughput:**	**Maximum Operating Schedule:**
1600 TPH	3,000,000 TPY	8760 HPY

Fuel Usage Data **(fill out all applicable fields) NOT APPLICABLE**

Does this emission unit combust fuel? ___Yes __X_ No	**If yes, is it?** ___ Indirect Fired ___Direct Fired
Maximum design heat input and/or maximum horsepower rating: N/A	**Type and Btu/hr rating of burners:** N/A

List the primary fuel type(s) and if applicable, the secondary fuel type(s). For each fuel type listed, provide the maximum hourly and annual fuel usage for each.
N/A

Describe each fuel expected to be used during the term of the permit.

Fuel Type	Max. Sulfur Content	Max. Ash Content	BTU Value
N/A	N/A	N/A	N/A

Emissions Data		
Criteria Pollutants	Potential Emissions	
	PPH	TPY
Carbon Monoxide (CO)	N/A	N/A
Nitrogen Oxides (NO_X)	N/A	N/A
Lead (Pb)	N/A	N/A
Particulate Matter ($PM_{2.5}$)	N/A	N/A
Particulate Matter (PM_{10})	0.01	0.01
Total Particulate Matter (TSP)	0.02	0.01
Sulfur Dioxide (SO_2)	N/A	N/A
Volatile Organic Compounds (VOC)	N/A	N/A
Hazardous Air Pollutants	Potential Emissions	
	PPH	TPY
	N/A	N/A
Regulated Pollutants other than Criteria and HAP	Potential Emissions	
	PPH	TPY
	N/A	N/A

List the method(s) used to calculate the potential emissions (include dates of any stack tests conducted, versions of software used, source and dates of emission factors, etc.).

See Emission Calculations in Attachment I.

Applicable Requirements

List all applicable requirements for this emission unit. For each applicable requirement, include the underlying rule/regulation citation and/or construction permit with the condition number. (*Note: Title V permit condition numbers alone are not the underlying applicable requirements*). If an emission limit is calculated based on the type of source and design capacity or if a standard is based on a design parameter, this information should also be included.

The maximum throughput of the Coal Truck Unloading Facility, originally constructed in 1996, shall not exceed 1,200 TPH and 3,000,000 TPY. The Facility shall consist of the two truck dumps (MTST-00-BLD), four collection bins, four vibratory feeders (MTST-00-CS-FDR-S1, 2, 3, & 4), a tube style reclaim conveyor (MTST-00-CS-CNV-S1a, MTST-00-CS-CNV-S1b), a transfer conveyor (MTST-00-CS-CNV-S2), existing Silo #1 (MTST-00-CS-CYS-1), existing Silo #2 (MTST-00-CS-CYS-2), existing belt feeders (MTST-00-CS-FDRVB1, 2, 3, 4, 5, & 6 and MTST-00-CS-FDR-N1, 2, 3, 4, 5, & 6), and existing conveyor "P" (MTST-00-CSCNV-P-1, MTST-00-CS-CNV-P-2).
[45CSR13, R13-2034, 4.1.1.]
(Title V permit condition 5.1.1)

In accordance with the information filed in Permit Application R13-2034, the following methods of controlling particulate matter emissions from the transfer points shall be installed, maintained, and operated so as to minimize emissions:

Transfer Point ID No.	Transfer Point Description	Method of Controls
DP1	Coal Trucks dumping to Collection Bins	Windbreaks 6 feet high with sheet metal walls extending up from the windbreaks and tying into a removable truss type roof.
DP2	Vibrating Feeders to Conveyor S-1a	Transfer point is fully enclosed and is also located underground.
DP5	Conveyor S-1b to Conveyor S-2	Transfer point is fully enclosed and is located inside a full enclosure at the top of the silo.
DP6	Conveyor S-2 to Silo	Transfer point inside a fully enclosed silo
DP7	Silos to Belt Feeders	Transfer point is fully enclosed and is located inside a fully enclosed silo.
DP8	Belt Feeders to Conveyor P-1	Transfer point is fully enclosed and is located inside a full enclosure underneath the silos.
T1	Existing Truck Dump to existing Silo Feed (S-1a) to existing Conveyor S1-b or New Transfer Conveyor S-3a	Full Enclosure
T2	Transfer Conveyor S-3a to Radial Stacker S-5 or Transfer Conveyor S-4	Partial Enclosure
T3	Transfer Conveyor S-4 to Radial Stacker S-6	Partial Enclosure
T4	Radial Stacker S-5 or Radial Stacker S-6 to Pile	Partial Enclosure
T7	Bulldozer to New Reclaim Hoppers	Transfer point is located and controlled underground

T8	New Reclaim Hoppers to New Reclaim Coal Conveyor T	Underground
T9	New Reclaim Conveyor T to Existing P-1 Conveyor	Partial Enclosure / Underground
T10	New Transfer on P-1 Conveyor to P-2 Conveyor	Full Enclosure
T11	Transfer Conveyor C-SF-1 with associated transfer house	Partial Enclosure
T12	Transfer Conveyor C-SF-2 with associated transfer house	Partial Enclosure
T13	Raw Coal Stock Out Conveyor "R" (MTST-00-CS-CNV-R) with associated transfer house	Partial Enclosure

[45CSR§30-12.7., 45CSR13, R13-2034, 1.0.]
(Title V permit condition 5.1.2)

Operation and Maintenance of Air Pollution Control Equipment. The permittee shall, to the extent practicable, install, maintain, and operate all pollution control equipment listed in Section 5.1.2 and associated monitoring equipment in a manner consistent with safety and good air pollution control practices for minimizing emissions, or comply with any more stringent limits set forth in this permit or as set forth by any State rule, Federal regulation, or alternative control plan approved by the Secretary.
[45CSR13, R13-2034, 4.1.8.]
(Title V permit condition 5.1.11)

The permitted facility shall be constructed and operated in accordance with the plans and specifications filed in Permit Applications R13-2034, R13-2034A, R13-2034B, R13-2034C, and any modifications, administrative updates, or amendments thereto. The Secretary may suspend or revoke a permit if the plans and specifications upon which the approval was based are not adhered to.
[45CSR13, R13-2034, 2.5.1.]
(Title V permit condition 5.1.12)

_X_ Permit Shield

For all applicable requirements listed above, provide monitoring/testing/recordkeeping/reporting which shall be used to demonstrate compliance. If the method is based on a permit or rule, include the condition number or citation. (Note: Each requirement listed above must have an associated method of demonstrating compliance. If there is not already a required method in place, then a method must be proposed.)

For the purposes of determining compliance with Section 5.1.1, the permittee shall monitor the total amount of coal transferred through both truck dumps at the Coal Truck Unloading Facility.
[45CSR13, R13-2034, 4.2.1.]
(Title V permit condition 5.2.1)

For the purposes of determining compliance with Section 5.1.1, the permittee shall maintain certified records of the total amount of coal transferred through both truck dumps at the Coal Truck Unloading Facility, as per Attachments A and B.

[45CSR13, R13-2034, 4.4.4.]

(Title V permit condition 5.4.1)

Record of Maintenance of Air Pollution Control Equipment. For all pollution control equipment listed in Section 5.1.2, the permittee shall maintain accurate records of all required pollution control equipment inspection and/or preventative maintenance procedures.
[45CSR13, R13-2034, 4.4.2.]
(Title V permit condition 5.4.3)

Record of Malfunctions of Air Pollution Control Equipment. For all air pollution control equipment listed in Section 5.1.2, the permittee shall maintain records of the occurrence and duration of any malfunction or operational shutdown of the air pollution control equipment during which excess emissions occur. For each such case, the following information shall be recorded:
a. The equipment involved.
b. Steps taken to minimize emissions during the event.
c. The duration of the event.
d. The estimated increase in emissions during the event.
For each such case associated with an equipment malfunction, the additional information shall also be recorded:
e. The cause of the malfunction.
f. Steps taken to correct the malfunction.
g. Any changes or modifications to equipment or procedures that would help prevent future recurrences of the malfunction.
[45CSR13, R13-2034, 4.4.3.]
(Title V permit condition 5.4.4)

Are you in compliance with all applicable requirements for this emission unit? _X_ Yes ___ No

If no, complete the **Schedule of Compliance Form** as **ATTACHMENT F.**

ATTACHMENT E

SOURCES FOR EMISSION POINT MS34

CONVEYOR

(C-SF-1)

ATTACHMENT E - Emission Unit Form

Emission Unit Description

Emission unit ID number:	**Emission unit name:**	**List any control devices associated with this emission unit:**
C-SF-1	Source for Emission Point MS34	Full Enclosure

Provide a description of the emission unit (type, method of operation, design parameters, etc.):
Conveyor SF-1: coal conveyor from P-2 Conveyor to R-Conveyor

Manufacturer:	**Model number:**	**Serial number:**
N/A	N/A	N/A
Construction date:	**Installation date:**	**Modification date(s):**
2005	2005	N/A

Design Capacity (examples: furnaces - tons/hr, tanks - gallons):
1600TPH

Maximum Hourly Throughput:	**Maximum Annual Throughput:**	**Maximum Operating Schedule:**
1600TPH	792,960 Tons	8760 hours

Fuel Usage Data **(fill out all applicable fields) NOT APPLICABLE**

Does this emission unit combust fuel? ___Yes _X__ No	**If yes, is it?** ___ Indirect Fired ___Direct Fired
Maximum design heat input and/or maximum horsepower rating: N/A	**Type and Btu/hr rating of burners:** N/A

List the primary fuel type(s) and if applicable, the secondary fuel type(s). For each fuel type listed, provide the maximum hourly and annual fuel usage for each.
N/A

Describe each fuel expected to be used during the term of the permit.

Fuel Type	Max. Sulfur Content	Max. Ash Content	BTU Value
N/A	N/A	N/A	N/A

Emissions Data		
Criteria Pollutants	Potential Emissions	
	PPH	TPY
Carbon Monoxide (CO)	N/A	N/A
Nitrogen Oxides (NO_X)	N/A	N/A
Lead (Pb)	N/A	N/A
Particulate Matter ($PM_{2.5}$)	N/A	N/A
Particulate Matter (PM_{10})	0.01	0.01
Total Particulate Matter (TSP)	0.01	0.02
Sulfur Dioxide (SO_2)	N/A	N/A
Volatile Organic Compounds (VOC)	N/A	N/A
Hazardous Air Pollutants	Potential Emissions	
	PPH	TPY
	N/A	N/A
Regulated Pollutants other than Criteria and HAP	Potential Emissions	
	PPH	TPY
	N/A	N/A

List the method(s) used to calculate the potential emissions (include dates of any stack tests conducted, versions of software used, source and dates of emission factors, etc.).

See Emission Calculations in Attachment I.

Applicable Requirements

List all applicable requirements for this emission unit. For each applicable requirement, include the underlying rule/regulation citation and/or construction permit with the condition number. (*Note: Title V permit condition numbers alone are not the underlying applicable requirements*). If an emission limit is calculated based on the type of source and design capacity or if a standard is based on a design parameter, this information should also be included.

In accordance with the information filed in Permit Application R13-2034, the following methods of controlling particulate matter emissions from the transfer points shall be installed, maintained, and operated so as to minimize emissions:

Transfer Point ID No.	Transfer Point Description	Method of Controls
DP1	Coal Trucks dumping to Collection Bins	Windbreaks 6 feet high with sheet metal walls extending up from the windbreaks and tying into a removable truss type roof.
DP2	Vibrating Feeders to Conveyor S-1a	Transfer point is fully enclosed and is also located underground.
DP5	Conveyor S-1b to Conveyor S-2	Transfer point is fully enclosed and is located inside a full enclosure at the top of the silo.
DP6	Conveyor S-2 to Silo	Transfer point inside a fully enclosed silo
DP7	Silos to Belt Feeders	Transfer point is fully enclosed and is located inside a fully enclosed silo.
DP8	Belt Feeders to Conveyor P-1	Transfer point is fully enclosed and is located inside a full enclosure underneath the silos.
T1	Existing Truck Dump to existing Silo Feed (S-1a) to existing Conveyor S1-b or New Transfer Conveyor S-3a	Full Enclosure
T2	Transfer Conveyor S-3a to Radial Stacker S-5 or Transfer Conveyor S-4	Partial Enclosure
T3	Transfer Conveyor S-4 to Radial Stacker S-6	Partial Enclosure
T4	Radial Stacker S-5 or Radial Stacker S-6 to Pile	Partial Enclosure
T7	Bulldozer to New Reclaim Hoppers	Transfer point is located and controlled underground

T8	New Reclaim Hoppers to New Reclaim Coal Conveyor T	Underground
T9	New Reclaim Conveyor T to Existing P-1 Conveyor	Partial Enclosure / Underground
T10	New Transfer on P-1 Conveyor to P-2 Conveyor	Full Enclosure
T11	Transfer Conveyor C-SF-1 with associated transfer house	Partial Enclosure
T12	Transfer Conveyor C-SF-2 with associated transfer house	Partial Enclosure
T13	Raw Coal Stock Out Conveyor "R" (MTST-00-CS-CNV-R) with associated transfer house	Partial Enclosure

[45CSR§30-12.7., 45CSR13, R13-2034, 1.0.]
(Title V permit condition 5.1.2)

Operation and Maintenance of Air Pollution Control Equipment. The permittee shall, to the extent practicable, install, maintain, and operate all pollution control equipment listed in Section 5.1.2 and associated monitoring equipment in a manner consistent with safety and good air pollution control practices for minimizing emissions, or comply with any more stringent limits set forth in this permit or as set forth by any State rule, Federal regulation, or alternative control plan approved by the Secretary.
[45CSR13, R13-2034, 4.1.8.]
(Title V permit condition 5.1.11)

The permitted facility shall be constructed and operated in accordance with the plans and specifications filed in Permit Applications R13-2034, R13-2034A, R13-2034B, R13-2034C, and any modifications, administrative updates, or amendments thereto. The Secretary may suspend or revoke a permit if the plans and specifications upon which the approval was based are not adhered to.
[45CSR13, R13-2034, 2.5.1.]
(Title V permit condition 5.1.12)

__X__ Permit Shield

For all applicable requirements listed above, provide monitoring/testing/recordkeeping/reporting which shall be used to demonstrate compliance. If the method is based on a permit or rule, include the condition number or citation. (Note: Each requirement listed above must have an associated method of demonstrating compliance. If there is not already a required method in place, then a method must be proposed.)

Record of Maintenance of Air Pollution Control Equipment. For all pollution control equipment listed in Section 5.1.2, the permittee shall maintain accurate records of all required pollution control equipment inspection and/or preventative maintenance procedures.
[45CSR13, R13-2034, 4.4.2.]
(Title V permit condition 5.4.3)

Record of Malfunctions of Air Pollution Control Equipment. For all air pollution control equipment listed in Section 5.1.2, the permittee shall maintain records of the occurrence and duration of any malfunction or operational shutdown of the air pollution control equipment during which excess emissions occur. For each such case, the following information shall be recorded:
a. The equipment involved.
b. Steps taken to minimize emissions during the event.
c. The duration of the event.
d. The estimated increase in emissions during the event.

For each such case associated with an equipment malfunction, the additional information shall also be recorded:
e. The cause of the malfunction.
f. Steps taken to correct the malfunction.
g. Any changes or modifications to equipment or procedures that would help prevent future recurrences of the malfunction.
[45CSR13, R13-2034, 4.4.3.]
(Title V condition 5.4.4)

Are you in compliance with all applicable requirements for this emission unit? Yes

If no, complete the **Schedule of Compliance Form** as **ATTACHMENT F.**

ATTACHMENT E

SOURCES FOR EMISSION POINT MS35

CONVEYOR

(C-SF-2)

ATTACHMENT E - Emission Unit Form

Emission Unit Description

Emission unit ID number:	Emission unit name:	List any control devices associated with this emission unit:
C-SF-2	Source for Emission Point MS35	Partial Enclosure

Provide a description of the emission unit (type, method of operation, design parameters, etc.):
Conveyor SF-2: coal stock out pile to Q-Conveyor

Manufacturer:	Model number:	Serial number:
N/A	N/A	N/A
Construction date:	**Installation date:**	**Modification date(s):**
2005	2005	N/A

Design Capacity (examples: furnaces - tons/hr, tanks - gallons):
1000TPH

Maximum Hourly Throughput:	Maximum Annual Throughput:	Maximum Operating Schedule:
1000TPH	0	8760 hours

Fuel Usage Data **(fill out all applicable fields) NOT APPLICABLE**

Does this emission unit combust fuel? ___Yes _X__ No	If yes, is it? ___ Indirect Fired ___Direct Fired
Maximum design heat input and/or maximum horsepower rating: N/A	**Type and Btu/hr rating of burners:** N/A

List the primary fuel type(s) and if applicable, the secondary fuel type(s). For each fuel type listed, provide the maximum hourly and annual fuel usage for each.
N/A

Describe each fuel expected to be used during the term of the permit.

Fuel Type	Max. Sulfur Content	Max. Ash Content	BTU Value
N/A	N/A	N/A	N/A

Emissions Data		
Criteria Pollutants	Potential Emissions	
	PPH	TPY
Carbon Monoxide (CO)	N/A	N/A
Nitrogen Oxides (NO_X)	N/A	N/A
Lead (Pb)	N/A	N/A
Particulate Matter ($PM_{2.5}$)	N/A	N/A
Particulate Matter (PM_{10})	0.00	0.01
Total Particulate Matter (TSP)	0.01	0.01
Sulfur Dioxide (SO_2)	N/A	N/A
Volatile Organic Compounds (VOC)	N/A	N/A
Hazardous Air Pollutants	Potential Emissions	
	PPH	TPY
Regulated Pollutants other than Criteria and HAP	Potential Emissions	
	PPH	TPY

List the method(s) used to calculate the potential emissions (include dates of any stack tests conducted, versions of software used, source and dates of emission factors, etc.).

See Emission Calculations in Attachment I.

Applicable Requirements

List all applicable requirements for this emission unit. For each applicable requirement, include the underlying rule/regulation citation and/or construction permit with the condition number. (*Note: Title V permit condition numbers alone are not the underlying applicable requirements*). If an emission limit is calculated based on the type of source and design capacity or if a standard is based on a design parameter, this information should also be included.

In accordance with the information filed in Permit Application R13-2034, the following methods of controlling particulate matter emissions from the transfer points shall be installed, maintained, and operated so as to minimize emissions:

Transfer Point ID No.	Transfer Point Description	Method of Controls
DP1	Coal Trucks dumping to Collection Bins	Windbreaks 6 feet high with sheet metal walls extending up from the windbreaks and tying into a removable truss type roof.
DP2	Vibrating Feeders to Conveyor S-1a	Transfer point is fully enclosed and is also located underground.
DP5	Conveyor S-1b to Conveyor S-2	Transfer point is fully enclosed and is located inside a full enclosure at the top of the silo.
DP6	Conveyor S-2 to Silo	Transfer point inside a fully enclosed silo
DP7	Silos to Belt Feeders	Transfer point is fully enclosed and is located inside a fully enclosed silo.
DP8	Belt Feeders to Conveyor P-1	Transfer point is fully enclosed and is located inside a full enclosure underneath the silos.
T1	Existing Truck Dump to existing Silo Feed (S-1a) to existing Conveyor S1-b or New Transfer Conveyor S-3a	Full Enclosure
T2	Transfer Conveyor S-3a to Radial Stacker S-5 or Transfer Conveyor S-4	Partial Enclosure
T3	Transfer Conveyor S-4 to Radial Stacker S-6	Partial Enclosure
T4	Radial Stacker S-5 or Radial Stacker S-6 to Pile	Partial Enclosure
T7	Bulldozer to New Reclaim Hoppers	Transfer point is located and controlled underground

T8	New Reclaim Hoppers to New Reclaim Coal Conveyor T	Underground
T9	New Reclaim Conveyor T to Existing P-1 Conveyor	Partial Enclosure / Underground
T10	New Transfer on P-1 Conveyor to P-2 Conveyor	Full Enclosure
T11	Transfer Conveyor C-SF-1 with associated transfer house	Partial Enclosure
T12	Transfer Conveyor C-SF-2 with associated transfer house	Partial Enclosure
T13	Raw Coal Stock Out Conveyor "R" (MTST-00-CS-CNV-R) with associated transfer house	Partial Enclosure

[45CSR§30-12.7., 45CSR13, R13-2034, 1.0.]
(Title V permit condition 5.1.2)

Operation and Maintenance of Air Pollution Control Equipment. The permittee shall, to the extent practicable, install, maintain, and operate all pollution control equipment listed in Section 5.1.2 and associated monitoring equipment in a manner consistent with safety and good air pollution control practices for minimizing emissions, or comply with any more stringent limits set forth in this permit or as set forth by any State rule, Federal regulation, or alternative control plan approved by the Secretary.
[45CSR13, R13-2034, 4.1.8.]
(Title V permit condition 5.1.11)

The permitted facility shall be constructed and operated in accordance with the plans and specifications filed in Permit Applications R13-2034, R13-2034A, R13-2034B, R13-2034C, and any modifications, administrative updates, or amendments thereto. The Secretary may suspend or revoke a permit if the plans and specifications upon which the approval was based are not adhered to.
[45CSR13, R13-2034, 2.5.1.]
(Title V permit condition 5.1.12)

__X__ Permit Shield

For all applicable requirements listed above, provide monitoring/testing/recordkeeping/reporting which shall be used to demonstrate compliance. If the method is based on a permit or rule, include the condition number or citation. (Note: Each requirement listed above must have an associated method of demonstrating compliance. If there is not already a required method in place, then a method must be proposed.)

Record of Maintenance of Air Pollution Control Equipment. For all pollution control equipment listed in Section 5.1.2, the permittee shall maintain accurate records of all required pollution control equipment inspection and/or preventative maintenance procedures.
[45CSR13, R13-2034, 4.4.2.]
(Title V permit condition 5.4.3)

Record of Malfunctions of Air Pollution Control Equipment. For all air pollution control equipment listed in Section 5.1.2, the permittee shall maintain records of the occurrence and duration of any malfunction or operational shutdown of the air pollution control equipment during which excess emissions occur. For each such case, the following information shall be recorded:
a. The equipment involved.
b. Steps taken to minimize emissions during the event.
c. The duration of the event.
d. The estimated increase in emissions during the event.

For each such case associated with an equipment malfunction, the additional information shall also be recorded:
e. The cause of the malfunction.
f. Steps taken to correct the malfunction.
g. Any changes or modifications to equipment or procedures that would help prevent future recurrences of the malfunction.
[45CSR13, R13-2034, 4.4.3.]
(Title V condition 5.4.4)

Are you in compliance with all applicable requirements for this emission unit? Yes

If no, complete the **Schedule of Compliance Form** as **ATTACHMENT F.**

ATTACHMENT E

SOURCES FOR EMISSION POINT MS36

CONVEYOR

(MTST-00-CS-CNV-R)

ATTACHMENT E - Emission Unit Form

Emission Unit Description

Emission unit ID number:	**Emission unit name:**	**List any control devices associated with this emission unit:**
MTST-00-CS-CNV-R	Source for Emission Point MS36	Partial Enclosure

Provide a description of the emission unit (type, method of operation, design parameters, etc.):
Conveyor MTST-00-CS-CNV-R: emergency stock out coal conveyor from SF-1 conveyor to stock out pile.

Manufacturer:	**Model number:**	**Serial number:**
N/A	N/A	N/A
Construction date:	**Installation date:**	**Modification date(s):**
2005	2005	N/A

Design Capacity (examples: furnaces - tons/hr, tanks - gallons):
1600TPH

Maximum Hourly Throughput:	**Maximum Annual Throughput:**	**Maximum Operating Schedule:**
1600TPH	0.00	8760 hours

Fuel Usage Data **(fill out all applicable fields) NOT APPLICABLE**

Does this emission unit combust fuel? ___Yes _X__ No	**If yes, is it?** ___ Indirect Fired ___Direct Fired
Maximum design heat input and/or maximum horsepower rating: N/A	**Type and Btu/hr rating of burners:** N/A

List the primary fuel type(s) and if applicable, the secondary fuel type(s). For each fuel type listed, provide the maximum hourly and annual fuel usage for each.
N/A

Describe each fuel expected to be used during the term of the permit.

Fuel Type	Max. Sulfur Content	Max. Ash Content	BTU Value
N/A	N/A	N/A	N/A

Emissions Data		
Criteria Pollutants	Potential Emissions	
	PPH	TPY
Carbon Monoxide (CO)	N/A	N/A
Nitrogen Oxides (NO_X)	N/A	N/A
Lead (Pb)	N/A	N/A
Particulate Matter ($PM_{2.5}$)	N/A	N/A
Particulate Matter (PM_{10})	0.01	0.01
Total Particulate Matter (TSP)	0.02	0.02
Sulfur Dioxide (SO_2)	N/A	N/A
Volatile Organic Compounds (VOC)	N/A	N/A
Hazardous Air Pollutants	Potential Emissions	
	PPH	TPY
	N/A	N/A
Regulated Pollutants other than Criteria and HAP	Potential Emissions	
	PPH	TPY
	N/A	N/A

List the method(s) used to calculate the potential emissions (include dates of any stack tests conducted, versions of software used, source and dates of emission factors, etc.).

See Emission Calculations in Attachment I.

Applicable Requirements

List all applicable requirements for this emission unit. For each applicable requirement, include the underlying rule/regulation citation and/or construction permit with the condition number. (*Note: Title V permit condition numbers alone are not the underlying applicable requirements*). If an emission limit is calculated based on the type of source and design capacity or if a standard is based on a design parameter, this information should also be included.

In accordance with the information filed in Permit Application R13-2034, the following methods of controlling particulate matter emissions from the transfer points shall be installed, maintained, and operated so as to minimize emissions:

Transfer Point ID No.	Transfer Point Description	Method of Controls
DP1	Coal Trucks dumping to Collection Bins	Windbreaks 6 feet high with sheet metal walls extending up from the windbreaks and tying into a removable truss type roof.
DP2	Vibrating Feeders to Conveyor S-1a	Transfer point is fully enclosed and is also located underground.
DP5	Conveyor S-1b to Conveyor S-2	Transfer point is fully enclosed and is located inside a full enclosure at the top of the silo.
DP6	Conveyor S-2 to Silo	Transfer point inside a fully enclosed silo
DP7	Silos to Belt Feeders	Transfer point is fully enclosed and is located inside a fully enclosed silo.
DP8	Belt Feeders to Conveyor P-1	Transfer point is fully enclosed and is located inside a full enclosure underneath the silos.
T1	Existing Truck Dump to existing Silo Feed (S-1a) to existing Conveyor S1-b or New Transfer Conveyor S-3a	Full Enclosure
T2	Transfer Conveyor S-3a to Radial Stacker S-5 or Transfer Conveyor S-4	Partial Enclosure
T3	Transfer Conveyor S-4 to Radial Stacker S-6	Partial Enclosure
T4	Radial Stacker S-5 or Radial Stacker S-6 to Pile	Partial Enclosure
T7	Bulldozer to New Reclaim Hoppers	Transfer point is located and controlled underground

T8	New Reclaim Hoppers to New Reclaim Coal Conveyor T	Underground
T9	New Reclaim Conveyor T to Existing P-1 Conveyor	Partial Enclosure / Underground
T10	New Transfer on P-1 Conveyor to P-2 Conveyor	Full Enclosure
T11	Transfer Conveyor C-SF-1 with associated transfer house	Partial Enclosure
T12	Transfer Conveyor C-SF-2 with associated transfer house	Partial Enclosure
T13	Raw Coal Stock Out Conveyor "R" (MTST-00-CS-CNV-R) with associated transfer house	Partial Enclosure

[45CSR§30-12.7., 45CSR13, R13-2034, 1.0.]
(Title V permit condition 5.1.2)

At all times except during periods of startup, shutdown, and malfunctions the visible emissions shall not exceed twenty percent (20%) opacity from the following equipment: coal conveyors, MTST-00-CS-CNV-R, -Q, -C2, -D, -H2, -J, -G, -C1, -H1, -S1a, S1b, -S3a, & -S2, the primary crushers MTST-00-CS-CRH-4 & -5, and the sample crushers MTST-00-CSS-CRH-B. In determining compliance with the particulate matter standard for opacity, Method 9 and the procedures in 40 C.F.R. § 60.11 shall be employed.
[45CSR16, 40 C.F.R. § 60.11 (c), 40 C.F.R. § 60.252 (c)]
(Title V permit condition 5.1.9)

At all times, including periods of startup, shutdown, and malfunction, any affected facility [coal equipment as listed in Section 5.1.9.] including associated air pollution control equipment shall, to the extent practicable, be maintained and operated in a manner consistent with good air pollution control practice for minimizing emissions. Determination that acceptable operating and maintenance procedures are being used, will be based on information available to the Secretary which may include, but is not limited to, monitoring results, opacity observations, review of operating and maintenance procedures, and inspection of the source.
[45CSR16, 40 C.F.R. § 60.11 (d)]
(Title V permit condition 5.1.10)

Operation and Maintenance of Air Pollution Control Equipment. The permittee shall, to the extent practicable, install, maintain, and operate all pollution control equipment listed in Section 5.1.2 and associated monitoring equipment in a manner consistent with safety and good air pollution control practices for minimizing emissions, or comply with any more stringent limits set forth in this permit or as set forth by any State rule, Federal regulation, or alternative control plan approved by the Secretary.
[45CSR13, R13-2034, 4.1.8.]
(Title V permit condition 5.1.11)

The permitted facility shall be constructed and operated in accordance with the plans and specifications filed in Permit Applications R13-2034, R13-2034A, R13-2034B, R13-2034C, and any modifications, administrative updates, or amendments thereto. The Secretary may suspend or revoke a permit if the plans and specifications upon which the approval was based are not adhered to.
[45CSR13, R13-2034, 2.5.1.]
(Title V permit condition 5.1.12)

_X___ Permit Shield

For all applicable requirements listed above, provide monitoring/testing/recordkeeping/reporting which shall be used to demonstrate compliance. If the method is based on a permit or rule, include the condition number or citation. (Note: Each requirement listed above must have an associated method of demonstrating compliance. If there is not already a required method in place, then a method must be proposed.)

The emission points (i.e., enclosure openings as applicable) from the coal equipment as listed in Section 5.1. 9 shall be observed visually by an individual trained (not necessarily certified) per Method 22 at least each calendar month during periods of normal facility operation for a sufficient time interval to determine if any visible emissions are present. If visible emissions are observed for three (3) consecutive monthly observations, Method 9 tests (requires a certified observer) shall be conducted on those emission points having visible emissions within 48 hours or as soon as practicable from the last Method 22-like observation revealing visible emissions. The Method 9 tests shall be conducted during periods of normal facility operation. If any Method 9 test indicates opacity greater than 80% of the allowable visible emission requirement, Method 9 tests shall be conducted each calendar month for those emission points exceeding 80%. If any Method 9 test indicates opacity less than or equal to 80% of the allowable limit, the monthly Method 22-like observations may resume as previously described.
[45CSR§30-5.1.c.]
(Title V permit condition 5.3.1)

A record of each visible emissions observation as required in Section 5.3.1. shall be maintained, including any data required by 40 C.F.R. 60 Appendix A, Method 22 or Method 9, whichever is appropriate. The record shall include, at a minimum, the date, time, name of the emission unit, the applicable visible emissions requirement, the results of the observation, and the name of the observer.
[45CSR§30-5.1.c.]
(Title V permit condition 5.4.2)

Record of Maintenance of Air Pollution Control Equipment. For all pollution control equipment listed in Section 5.1.2, the permittee shall maintain accurate records of all required pollution control equipment inspection and/or preventative maintenance procedures.
[45CSR13, R13-2034, 4.4.2.]
(Title V permit condition 5.4.3)

Record of Malfunctions of Air Pollution Control Equipment. For all air pollution control equipment listed in Section 5.1.2, the permittee shall maintain records of the occurrence and duration of any malfunction or operational shutdown of the air pollution control equipment during which excess emissions occur. For each such case, the following information shall be recorded:
a. The equipment involved.
b. Steps taken to minimize emissions during the event.
c. The duration of the event.
d. The estimated increase in emissions during the event.

For each such case associated with an equipment malfunction, the additional information shall also be recorded:
e. The cause of the malfunction.
f. Steps taken to correct the malfunction.
g. Any changes or modifications to equipment or procedures that would help prevent future recurrences of the malfunction.
[45CSR13, R13-2034, 4.4.3.]
(Title V condition 5.4.4)

Are you in compliance with all applicable requirements for this emission unit? Yes

If no, complete the **Schedule of Compliance Form** as **ATTACHMENT F.**

ATTACHMENT E

SOURCES FOR EMISSION POINT MS37

LIMESTONE TRUCK UNLOADING ENCLOSURE, LIMESTONE HOPPER, LIMESTONE UNLOADING FEEDER

(MTST-00-BLD-LSUB-1, MTST-00-SAR-HPR-1A, MTST-00-SAR-HPR-1B, MTST-00-SAR-FDR-1A, MTST-00-SAR-FDR-1B)

ATTACHMENT E - Emission Unit Form

Emission Unit Description	*Limestone Unloading*	
Emission unit ID number: MTST-00-BLD-LSUB-1 MTST-00-SAR-HPR-1A MTST-00-SAR-HPR-1B MTST-00-SAR-FDR-1A MTST-00-SAR-FDR-1B	**Emission unit name:** Sources for emission point MS37	**List any control devices associated with this emission unit:** MTST-00-BLD-LSUB-1 – PE (DC#3,BH2ca) MTST-00-SAR-HPR-1A – FE (DC#3,BH2ca) MTST-00-SAR-HPR-1B – FE (DC#3,BH2ca) MTST-00-SAR-FDR-1A – FE (DC#3,BH2ca) MTST-00-SAR-FDR-1B – FE (DC#3,BH2ca)
Provide a description of the emission unit (type, method of operation, design parameters, etc.): MTST-00-BLD-LSUB-1 - Two bay pre-engineered steel building with two below grade unloading hoppers. MTST-00-SAR-HPR-1A; MTST-00-SAR-HPR-1B; MTST-00-SAR-FDR-1A; MTST-00-SAR-FDR-1B Limestone Truck Unloading Hoppers and Vibratory Feeders to Conveyor MTST-00-SAR-CNV-A		
Manufacturer: MTST-00-BLD-LSUB-1- Fabral MTST-00-SAR-HPR-1A – Kinergy MTST-00-SAR-HPR-1B- Kinergy MTST-00-SAR-FDR-1A - Kinergy MTST-00-SAR-FDR-1B Kinergy	**Model number:** MTST-00-BLD-LSUB-1- N/A MTST-00-SAR-HPR-1A– KDF-48 HDDT MTST-00-SAR-HPR-1B– KDF-48 HDDT MTST-00-SAR-FDR-1A– KDF-48 HDDT MTST-00-SAR-FDR-1B– KDF-48 HDDT	**Serial number:** MTST-00-BLD-LSUB-1- N/A MTST-00-SAR-HPR-1A – N/A MTST-00-SAR-HPR-1B- N/A MTST-00-SAR-FDR-1A – N/A MTST-00-SAR-FDR-1B - N/A
Construction date: MTST-00-BLD-LSUB-1 - 1994 MTST-00-SAR-HPR-1A - 1994 MTST-00-SAR-HPR-1B - 1994 MTST-00-SAR-FDR-1A - 1994 MTST-00-SAR-FDR-1B - 1994	**Installation date:** MTST-00-BLD-LSUB-1 – N/A MTST-00-SAR-HPR-1A - 1994 MTST-00-SAR-HPR-1B - 1994 MTST-00-SAR-FDR-1A - 1994 MTST-00-SAR-FDR-1B - 1994	**Modification date(s):** MTST-00-BLD-LSUB-1- N/A MTST-00-SAR-HPR-1A – N/A MTST-00-SAR-HPR-1B- N/A MTST-00-SAR-FDR-1A – N/A MTST-00-SAR-FDR-1B - N/A
Design Capacity (examples: furnaces - tons/hr, tanks - gallons): MTST-00-BLD-LSUB-1 – N/A MTST-00-SAR-HPR-1A – 300 tons MTST-00-SAR-HPR-1B – 300 tons MTST-00-SAR-FDR-1A –600 TPH MTST-00-SAR-FDR-1B – 600 TPH		
Maximum Hourly Throughput: MTST-00-BLD-LSUB-1 – N/A MTST-00-SAR-HPR-1A – 300 Tons MTST-00-SAR-HPR-1B – 300 Tons MTST-00-SAR-FDR-1A – 600 TPH MTST-00-SAR-FDR-1B – 600 TPH	**Maximum Annual Throughput:** MTST-00-BLD-LSUB-1 – N/A MTST-00-SAR-HPR-1A – 2,628,000 TN MTST-00-SAR-HPR-1B – 2,628,000 TN MTST-00-SAR-FDR-1A –5,256,000 TN MTST-00-SAR-FDR-1B – 5,256,000 TN	**Maximum Operating Schedule:** MTST-00-BLD-LSUB-1 – 8760 HPY MTST-00-SAR-HPR-1A – 8760 HPY MTST-00-SAR-HPR-1B – 8760 HPY MTST-00-SAR-FDR-1A – 8760 HPY MTST-00-SAR-FDR-1B – 8760 HPY

Fuel Usage Data (fill out all applicable fields)

Does this emission unit combust fuel? ___Yes __X_ No	If yes, is it? ___ Indirect Fired ___Direct Fired
Maximum design heat input and/or maximum horsepower rating: N/A	Type and Btu/hr rating of burners: N/A

List the primary fuel type(s) and if applicable, the secondary fuel type(s). For each fuel type listed, provide the maximum hourly and annual fuel usage for each.
N/A

Describe each fuel expected to be used during the term of the permit.

Fuel Type	Max. Sulfur Content	Max. Ash Content	BTU Value
N/A	N/A	N/A	N/A

Emissions Data		
Criteria Pollutants	Potential Emissions	
	PPH	TPY
Carbon Monoxide (CO)	N/A	N/A
Nitrogen Oxides (NO_X)	N/A	N/A
Lead (Pb)	N/A	N/A
Particulate Matter ($PM_{2.5}$)	N/A	N/A
Particulate Matter (PM_{10})	0.07	0.04
Total Particulate Matter (TSP)	0.14	0.04
Sulfur Dioxide (SO_2)	N/A	N/A
Volatile Organic Compounds (VOC)	N/A	N/A
Hazardous Air Pollutants	Potential Emissions	
	PPH	TPY
	N/A	N/A
Regulated Pollutants other than Criteria and HAP	Potential Emissions	
	PPH	TPY
	N/A	N/A

List the method(s) used to calculate the potential emissions (include dates of any stack tests conducted, versions of software used, source and dates of emission factors, etc.).

See Emission Calculations in Attachment I

Applicable Requirements

List all applicable requirements for this emission unit. For each applicable requirement, include the underlying rule/regulation citation and/or construction permit with the condition number. (*Note: Title V permit condition numbers alone are not the underlying applicable requirements*). If an emission limit is calculated based on the type of source and design capacity or if a standard is based on a design parameter, this information should also be included.

In accordance with the information filed in Permit Application R13-1660C, and any amendments thereto, the following maximum throughputs shall not be exceeded, and, at a minimum, the following control equipment shall be installed, maintained, and operated so as to minimize particulate matter emissions:

Equipment ID No.	Description	Maximum Capacity		Control Equipment[1]	Associated Transfer Points		
		TPH	TPY		Location B- Before A- After	ID No.	Control Equipment[1]
Limestone Crushing Circuit							
2sa	Limestone Unloading Hoppers	440	354,000	PE, BH	B A	2ca n/a	PE, BH UG
3se	Sample Crusher Conveyer	440	354,000	FE, BH	B A	n/a 3ca	UG FE
3sg	Sample Crusher	7	261	FE, BH	B A	3ca 3cb	FE BH
4sa	Storage Pile Conveyer	440	354,000	FE	B A	3cb 5c	BH FE
5sa	Storage Pile (30,000 ton)	n/a	354,000	FE	B A	5c n/a	FE UG
6sd	Primary Crusher Conveyer	250	354,000	FE	B A	n/a 7cc	UG BH
n/a	Tramp Metal Magnet Building	250	354,000	FE	n/a	n/a	n/a
7sb	Primary Crusher	250	354,000	FE, BH	B A	7cc 7cc	BH BH
7sd	Shuttle Conveyer	250	354,000	FE	B A	7cc 8ce	BH BH
8sa	Limestone Storage Silo 1 (500 ton)	250	354,000	FE, BH	B	8ce	BH
8sb	Limestone Storage Silo 2 (500 ton)			FE, BH	B	8ce	BH
8sc	Limestone Storage Silo 3 (500 ton)			FE, BH	B	8ce	BH
8sd	Limestone Storage Silo 4 (500 ton)			FE, BH	B	8ce	BH

[1] BH - Baghouse, FE - Full Enclosure, PE - Partial Enclosure, UG - Underground Reclaim

[45CSR13 - Permit No. R13-1660 §A.1.]

(Title V permit condition 6.1.1)

Particulate matter (PM) emissions from the following emission points shall not exceed the specified limitations, and the units shall maintain the minimum collection efficiency:

Control Device ID NO.	Control Device Type	Emission Point ID No.	Maximum Emission Limit (lb/hour)[1]	Maximum Emission Limit (tons/year)	Maximum Emission Limit (gr/dscf)[2]	Maximum Collection Efficiency (%)
2ca	Baghouse	2e	<0.01	<0.01	0.022	99.80
3cb	Baghouse	3e	<0.01	<0.01	0.022	99.80
6cc	Baghouse	6e	<0.01	<0.01	0.022	99.80
7cc*	Baghouse	7e	<0.01	<0.01	0.022	99.80
8ce*	Baghouse	8e	<0.01	<0.01	0.022	99.80

[1] These limits are considered instantaneous limits and represent limits for Total Suspended Particulate and Particulate Matter less than 10 microns.

[2] Pursuant to 40.672(a)(1) and in grains/dry standard cubic feet

**Note – 7cc is listed as Dust Collector #5 and 8ce is listed as Dust Collector #7 in Section 1.0 Emission Table to coincide with plant labeling*

[45CSR13 - Permit No. R13-1660 §A.2., 45CSR16, 40 CFR §60.672(a)(1)]

(Title V permit condition 6.1.2)

The limestone unloading area shall take place within a two sided roofed enclosure.
[45CSR133 - Permit No. R13-1660 §A.8.]
(Title V permit condition 6.1.8)

The pertinent sections of 40 CFR 60 applicable to this facility include the following:
a. §§60.672(a), (b), & (f) - Particulate matter stack emissions from the Baghouse vents BH2ca, BH3cb, BH6cc, BH7cc and BH8ce shall not exceed 7 percent opacity. Any fugitive emissions from the equipment and transfer points identified in condition 6.1.1 shall not exceed 10 percent opacity
b. The opacity requirement set forth in 6.1.11.a. shall apply at all times except during periods of startup, shutdown, and malfunctions
[45CSR13 - Permit No. R13-1660 §B.4., 45CSR16, 40 CFR §60.11(c), 40 CFR §§ 60,672 (a), (b), & (f)]
(Title V permit condition 6.1.11)

At all times, including periods of startup, shutdown, and malfunction, any affected facility [*limestone equipment as defined in* conditions *6.1.1. and 6.1.2.*] including associated air pollution control equipment shall, to the extent practicable, be maintained and operated in a manner consistent with good air pollution control practice for minimizing emissions. Determination that acceptable operating and maintenance procedures are being used, will be based on information available to the Secretary which may include, but is not limited to, monitoring results, opacity observations, review of operating and maintenance procedures, and inspection of the source.
[45CSR16, 40 C.F.R. § 60.11(d)]
(Title V permit condition 6.1.12)

__X__ Permit Shield

For all applicable requirements listed above, provide monitoring/testing/recordkeeping/reporting which shall be used to demonstrate compliance. If the method is based on a permit or rule, include the condition number or citation. (Note: Each requirement listed above must have an associated method of demonstrating compliance. If there is not already a required method in place, then a method must be proposed.)

At such reasonable time(s) as the Director may designate, the permittee shall conduct or have conducted test(s) to determine compliance with the emission limitations as set forth in condition 6.1.2. Test(s) shall be conducted in accordance with condition 6.3.3. contained herein. The Director, or his duly authorized representative, may, at his option, witness or conduct such test. Should the Director exercise his option to conduct such test(s), the operator shall provide all the necessary sampling connections and sampling ports to be located in such manner as the Director may require, power for test equipment, and the required safety equipment such as scaffolding, railings, and ladders to comply with generally accepted good safety practices.
[45CSR13 - Permit No. R13-1660 §A.11.]
(Title V permit condition 6.3.1)

Each emissions unit with a visible emissions limit contained in this permit section (Section 6) shall be observed visually at least each calendar month during periods of normal facility operation for a sufficient time interval to determine if the unit has any visible emissions using 40 C.F.R. 60 Appendix A, Method 22. If visible emissions from any of the emissions units are observed during these monthly observations, or at any other time, that appear to exceed 50 percent of the allowable visible emission requirement for the emission unit, visible emissions evaluations in accordance with 40 C.F.R. 60 Appendix A, Method 9 shall be conducted as soon as practicable, but no later than one (1) month from the time of the observation. A Method 9 evaluation shall not be required if the visible emissions condition is corrected in a timely manner; the emissions unit is operating at normal operating conditions; and, the cause and corrective measures taken are recorded.
[45CSR13 - Permit No. R13-1660 §A.12.a)]
(Title V permit condition 6.3.2)

The pertinent sections of 40 CFR 60 applicable to this facility include the following:
a. §60.675(c)(1) - In determining compliance with the particulate matter standards in §60.672 (b) [condition *6.1.11*] and (c), the owner or operator shall use Method 9 and the procedures in §60.11, with the following additions:
1. §60.675(c)(1)(i) - The minimum distance between the observer and the emission source shall be 4.57 meters (15 feet).
2. §60.675(c)(1)(ii) - The observer shall, when possible, select a position that minimizes interference from other fugitive emission sources (e.g., road dust). The required observer position relative to the sun (Method 9, Section 2.1) must be followed.
b. §60.675(c)(3) - When determining compliance with the fugitive emissions standard for any affected facility described under §60.672(b) of 40 CFR Subpart OOO [*condition 6.1.11.*], the duration of the Method 9 observations may be reduced from 3 hours (thirty 6-minute averages) to 1 hour (ten 6-minute averages) only if the following conditions apply
1. §60.675(c)(3)(ii) - There are no individual readings greater than 10 percent opacity; and
2. §60.675(c)(3)(ii) - There are no more than 3 readings of 10 percent for the 1-hour period
c. §60.675(g) - If, after 30 days notice for an initially scheduled performance test, there is delay (due to operational problems, etc.) in conducting any rescheduled performance test required in this section, the owner or operator of an affected facility shall submit a notice to the Administrator at least 7 days prior to any rescheduled performance test.
[45CSR13 - Permit No. R13-1660 §B.4.]
(Title V permit condition 6.3.3)

With regard to any testing required by the Director, the permittee shall submit to the Director of Air Quality a test protocol detailing the proposed test methods, the date, and the time the proposed testing is to take place, as well as identifying the sampling locations and other relevant information. The test protocol must be received by the Director no less than thirty (30) days prior to the date the testing is to take place. Test results shall be submitted to the Director no more than sixty (60) days after the date the testing takes place.
[45CSR13 - Permit No. R13-1660 §B.6.]
(Title V permit condition 6.3.4)

A record of each visible emissions observation as required in permit condition 6.3.2. and/or 6.3.3. shall be maintained, including any data required by 40 C.F.R. 60 Appendix A, Method 22 or Method 9, whichever is appropriate. The record shall include, at a minimum, the date, time, name of the emission unit, the applicable visible emissions requirement, the results of the observation, and the name of the observer.
[45CSR13 - Permit No. R13-1660 §A.12.b)]
(Title V permit condition 6.4.1)

The pertinent sections of 40 CFR 60 applicable to this facility include the following:
a. §60.676(f) - The owner or operator of any affected facility shall submit written reports of the results of all performance tests conducted to demonstrate compliance with the standards set forth in §60.672 of Subpart OOO, including reports of opacity observations made using Method 9 to demonstrate compliance with §60.672(b) [*condition 6.1.11.*], (c), and (f).
b. §60.7(a) - Any owner or operator subject to the provisions of this part [*40 CFR 60*] shall furnish written notification as follows:
§60.7(a) (4) - A notification of any physical or operational change to an existing facility which may increase the emission rate of any air pollutant to which a standard applies.
c. §60.7(b) - Any owner or operator subject to the provisions of this part [*40 CFR 60*] shall maintain records of the occurrence and duration of any startup, shutdown, or malfunction in the operation of an affected facility; any malfunction of the air pollution control equipment.
[45CSR13 - Permit No. R13-1660 §B.4.]
(Title V permit condition 6.5.1)

All notifications and reports required pursuant to 40 CFR 60 under §60.7 shall be forwarded to the WVDAQ and USEPA as outlined in permit condition 3.5.3.
[45CSR13 - Permit No. R13-1660 §B.8.]
(Title V permit condition 6.5.2)

Are you in compliance with all applicable requirements for this emission unit? Yes

If no, complete the **Schedule of Compliance Form** as **ATTACHMENT F**.

ATTACHMENT E

SOURCES FOR EMISSION POINT MS38

LIMESTONE HOPPER

(MTST-00-SAR-CNV-A)

ATTACHMENT E - Emission Unit Form

Emission Unit Description	*Limestone Unloading Conveyor*	
Emission unit ID number: MTST-00-SAR-CNV-A	**Emission unit name:** Source for emission point MS38	**List any control devices associated with this emission unit:** FE / BH3cb (DC#6)
Provide a description of the emission unit (type, method of operation, design parameters, etc.) 36 inch limestone conveyor (4sa) from unloading feeders to sample system and storage dome		
Manufacturer: Montague	**Model number:** N/A	**Serial number:** N/A
Construction date: 1994	**Installation date:** 1994	**Modification date(s):** N/A
Design Capacity (examples: furnaces - tons/hr, tanks - gallons): 600 TPH		
Maximum Hourly Throughput: 600 TPH	**Maximum Annual Throughput:** 5,256,000 TPY	**Maximum Operating Schedule:** 8,760 HR/YR
Fuel Usage Data **(fill out all applicable fields)**		
Does this emission unit combust fuel? ___Yes __X_ No		**If yes, is it?** **___ Indirect Fired ___Direct Fired**
Maximum design heat input and/or maximum horsepower rating: N/A		**Type and Btu/hr rating of burners:** N/A
List the primary fuel type(s) and if applicable, the secondary fuel type(s). For each fuel type listed, provide the maximum hourly and annual fuel usage for each. N/A		

Describe each fuel expected to be used during the term of the permit.

Fuel Type	Max. Sulfur Content	Max. Ash Content	BTU Value
N/A	N/A	N/A	N/A

Emissions Data		
Criteria Pollutants	Potential Emissions	
	PPH	TPY
Carbon Monoxide (CO)	N/A	N/A
Nitrogen Oxides (NO_X)	N/A	N/A
Lead (Pb)	N/A	N/A
Particulate Matter ($PM_{2.5}$)	N/A	N/A
Particulate Matter (PM_{10})	0.004	0.001
Total Particulate Matter (TSP)	0.01	0.002
Sulfur Dioxide (SO_2)	N/A	N/A
Volatile Organic Compounds (VOC)	N/A	N/A
Hazardous Air Pollutants	Potential Emissions	
	PPH	TPY
	N/A	N/A
Regulated Pollutants other than Criteria and HAP	Potential Emissions	
	PPH	TPY
	N/A	N/A

List the method(s) used to calculate the potential emissions (include dates of any stack tests conducted, versions of software used, source and dates of emission factors, etc.).

See Emission Calculations in Attachment I

Applicable Requirements

List all applicable requirements for this emission unit. For each applicable requirement, include the underlying rule/regulation citation and/or construction permit with the condition number. (*Note: Title V permit condition numbers alone are not the underlying applicable requirements*). If an emission limit is calculated based on the type of source and design capacity or if a standard is based on a design parameter, this information should also be included.

In accordance with the information filed in Permit Application R13-1660C, and any amendments thereto, the following maximum throughputs shall not be exceeded, and, at a minimum, the following control equipment shall be installed, maintained, and operated so as to minimize particulate matter emissions:

Equipment ID No.	Description	Maximum Capacity		Control Equipment[1]	Associated Transfer Points		
		TPH	TPY		Location B- Before A- After	ID No.	Control Equipment[1]
Limestone Crushing Circuit							
2sa	Limestone Unloading Hoppers	440	354,000	PE, BH	B A	2ca n/a	PE, BH UG
3se	Sample Crusher Conveyer	440	354,000	FE, BH	B A	n/a 3ca	UG FE
3sg	Sample Crusher	7	261	FE, BH	B A	3ca 3cb	FE BH
4sa	Storage Pile Conveyer	440	354,000	FE	B A	3cb 5c	BH FE
5sa	Storage Pile (30,000 ton)	n/a	354,000	FE	B A	5c n/a	FE UG
6sd	Primary Crusher Conveyer	250	354,000	FE	B A	n/a 7cc	UG BH
n/a	Tramp Metal Magnet Building	250	354,000	FE	n/a	n/a	n/a
7sb	Primary Crusher	250	354,000	FE, BH	B A	7cc 7cc	BH BH
7sd	Shuttle Conveyer	250	354,000	FE	B A	7cc 8ce	BH BH
8sa	Limestone Storage Silo 1 (500 ton)	250	354,000	FE, BH	B	8ce	BH
8sb	Limestone Storage Silo 2 (500 ton)			FE, BH	B	8ce	BH
8sc	Limestone Storage Silo 3 (500 ton)			FE, BH	B	8ce	BH
8sd	Limestone Storage Silo 4 (500 ton)			FE, BH	B	8ce	BH

[1] BH - Baghouse, FE - Full Enclosure, PE - Partial Enclosure, UG - Underground Reclaim

[45CSR13 - Permit No. R13-1660 §A.1.]

(Title V permit condition 6.1.1)

Particulate matter (PM) emissions from the following emission points shall not exceed the specified limitations, and the units shall maintain the minimum collection efficiency:

Control Device ID NO.	Control Device Type	Emission Point ID No.	Maximum Emission Limit (lb/hour)[1]	Maximum Emission Limit (tons/year)	Maximum Emission Limit (gr/dscf)[2]	Maximum Collection Efficiency (%)
2ca	Baghouse	2e	<0.01	<0.01	0.022	99.80
3cb	Baghouse	3e	<0.01	<0.01	0.022	99.80
6cc	Baghouse	6e	<0.01	<0.01	0.022	99.80
7cc*	Baghouse	7e	<0.01	<0.01	0.022	99.80
8ce*	Baghouse	8e	<0.01	<0.01	0.022	99.80

[1] These limits are considered instantaneous limits and represent limits for Total Suspended Particulate and Particulate Matter less than 10 microns.

[2] Pursuant to 40.672(a)(1) and in grains/dry standard cubic feet

**Note – 7cc is listed as Dust Collector #5 and 8ce is listed as Dust Collector #7 in Section 1.0 Emission Table to coincide with plant labeling*

[45CSR13 - Permit No. R13-1660 §A.2., 45CSR16, 40 CFR §60.672(a)(1)]

(Title V permit condition 6.1.2)

The pertinent sections of 40 CFR 60 applicable to this facility include the following:
a. §§60.672(a), (b), & (f) - Particulate matter stack emissions from the Baghouse vents BH2ca, BH3cb, BH6cc, BH7cc and BH8ce shall not exceed 7 percent opacity. Any fugitive emissions from the equipment and transfer points identified in condition 6.1.1 shall not exceed 10 percent opacity
b. The opacity requirement set forth in 6.1.11.a. shall apply at all times except during periods of startup, shutdown, and malfunctions

[45CSR13 - Permit No. R13-1660 §B.4., 45CSR16, 40 CFR §60.11(c), 40 CFR §§ 60,672 (a), (b), & (f)]
(Title V permit condition 6.1.11)

At all times, including periods of startup, shutdown, and malfunction, any affected facility [*limestone equipment as defined in* conditions *6.1.1. and 6.1.2.*] including associated air pollution control equipment shall, to the extent practicable, be maintained and operated in a manner consistent with good air pollution control practice for minimizing emissions. Determination that acceptable operating and maintenance procedures are being used, will be based on information available to the Secretary which may include, but is not limited to, monitoring results, opacity observations, review of operating and maintenance procedures, and inspection of the source.

[45CSR16, 40 C.F.R. § 60.11(d)]
(Title V permit condition 6.1.12)

__X__ Permit Shield

For all applicable requirements listed above, provide monitoring/testing/recordkeeping/reporting which shall be used to demonstrate compliance. If the method is based on a permit or rule, include the condition number or citation. (Note: Each requirement listed above must have an associated method of demonstrating compliance. If there is not already a required method in place, then a method must be proposed.)

At such reasonable time(s) as the Director may designate, the permittee shall conduct or have conducted test(s) to determine compliance with the emission limitations as set forth in condition 6.1.2. Test(s) shall be conducted in accordance with condition 6.3.3. contained herein. The Director, or his duly authorized representative, may, at his option, witness or conduct such test. Should the Director exercise his option to conduct such test(s), the operator shall provide all the necessary sampling connections and sampling ports to be located in such manner as the Director may require, power for test equipment, and the required safety equipment such as scaffolding, railings, and ladders to comply with generally accepted good safety practices.
[45CSR13 - Permit No. R13-1660 §A.11.]
(Title V permit condition 6.3.1)

Each emissions unit with a visible emissions limit contained in this permit section (Section 6) shall be observed visually at least each calendar month during periods of normal facility operation for a sufficient time interval to determine if the unit has any visible emissions using 40 C.F.R. 60 Appendix A, Method 22. If visible emissions from any of the emissions units are observed during these monthly observations, or at any other time, that appear to exceed 50 percent of the allowable visible emission requirement for the emission unit, visible emissions evaluations in accordance with 40 C.F.R. 60 Appendix A, Method 9 shall be conducted as soon as practicable, but no later than one (1) month from the time of the observation. A Method 9 evaluation shall not be required if the visible emissions condition is corrected in a timely manner; the emissions unit is operating at normal operating conditions; and, the cause and corrective measures taken are recorded.
[45CSR13 - Permit No. R13-1660 §A.12.a)]
(Title V permit condition 6.3.2)

The pertinent sections of 40 CFR 60 applicable to this facility include the following:
a. §60.675(c)(1) - In determining compliance with the particulate matter standards in §60.672 (b) [condition *6.1.11*] and (c), the owner or operator shall use Method 9 and the procedures in §60.11, with the following additions:
1. §60.675(c)(1)(i) - The minimum distance between the observer and the emission source shall be 4.57 meters (15 feet).
2. §60.675(c)(1)(ii) - The observer shall, when possible, select a position that minimizes interference from other fugitive emission sources (e.g., road dust). The required observer position relative to the sun (Method 9, Section 2.1) must be followed.
b. §60.675(c)(3) - When determining compliance with the fugitive emissions standard for any affected facility described under §60.672(b) of 40 CFR Subpart OOO [*condition 6.1.11.*], the duration of the Method 9 observations may be reduced from 3 hours (thirty 6-minute averages) to 1 hour (ten 6-minute averages) only if the following conditions apply
1. §60.675(c)(3)(ii) - There are no individual readings greater than 10 percent opacity; and
2. §60.675(c)(3)(ii) - There are no more than 3 readings of 10 percent for the 1-hour period
c. §60.675(g) - If, after 30 days notice for an initially scheduled performance test, there is delay (due to operational problems, etc.) in conducting any rescheduled performance test required in this section, the owner or operator of an affected facility shall submit a notice to the Administrator at least 7 days prior to any rescheduled performance test.
[45CSR13 - Permit No. R13-1660 §B.4.]
(Title V permit condition 6.3.3)

With regard to any testing required by the Director, the permittee shall submit to the Director of Air Quality a test protocol detailing the proposed test methods, the date, and the time the proposed testing is to take place, as well as identifying the sampling locations and other relevant information. The test protocol must be received by the Director no less than thirty (30) days prior to the date the testing is to take place. Test results shall be submitted to the Director no more than sixty (60) days after the date the testing takes place.
[45CSR13 - Permit No. R13-1660 §B.6.]
(Title V permit condition 6.3.4)

A record of each visible emissions observation as required in permit condition 6.3.2. and/or 6.3.3. shall be maintained, including any data required by 40 C.F.R. 60 Appendix A, Method 22 or Method 9, whichever is appropriate. The record shall include, at a minimum, the date, time, name of the emission unit, the applicable visible emissions requirement, the results of the observation, and the name of the observer.
[45CSR13 - Permit No. R13-1660 §A.12.b)]
(Title V permit condition 6.4.1)

The pertinent sections of 40 CFR 60 applicable to this facility include the following:
a. §60.676(f) - The owner or operator of any affected facility shall submit written reports of the results of all performance tests conducted to demonstrate compliance with the standards set forth in §60.672 of Subpart OOO, including reports of opacity observations made using Method 9 to demonstrate compliance with §60.672(b) [*condition 6.1.11.*], (c), and (f).
b. §60.7(a) - Any owner or operator subject to the provisions of this part [*40 CFR 60*] shall furnish written notification as follows:
§60.7(a) (4) - A notification of any physical or operational change to an existing facility which may increase the emission rate of any air pollutant to which a standard applies.
c. §60.7(b) - Any owner or operator subject to the provisions of this part [*40 CFR 60*] shall maintain records of the occurrence and duration of any startup, shutdown, or malfunction in the operation of an affected facility; any malfunction of the air pollution control equipment.
[45CSR13 - Permit No. R13-1660 §B.4.]
(Title V permit condition 6.5.1)

All notifications and reports required pursuant to 40 CFR 60 under §60.7 shall be forwarded to the WVDAQ and USEPA as outlined in permit condition 3.5.3.
[45CSR13 - Permit No. R13-1660 §B.8.]
(Title V permit condition 6.5.2)

Are you in compliance with all applicable requirements for this emission unit? Yes

If no, complete the **Schedule of Compliance Form** as **ATTACHMENT F.**

ATTACHMENT E

SOURCES FOR EMISSION POINT MS39

LIMESTONE AUTOMATIC SAMPLING SYSTEM & ASSOCIATED EQUIPMENT

(MTST-00-SAR-SM-1, MTST-00-SAR-FDR-1, MTST-00-SAR-CRH-2(3sg), MTST-00-SAR-FDR-2, MTST-00-SAR-SM-2, MTST-00-SAR-CNV-D (3se)

ATTACHMENT E - Emission Unit Form

Emission Unit Description	*Limestone Sample System*	
Emission unit ID number: MTST-00-SAR-SM-1 MTST-00-SAR-FDR-1 MTST-00-SAR-CRH-2 (3sg) MTST-00-SAR-FDR-2 MTST-00-SAR-SM-2 MTST-00-SAR-CNV-D (3se)	**Emission unit name:** Sources for emission point MS39	**List any control devices associated with this emission unit:** MTST-00-SAR-SM-1 - FE /DC#6 (BH3cb) MTST-00-SAR-FDR-1 - FE /DC#6 (BH3cb) MTST-00-SAR-CRH-2 (3sg) - FE /DC#6 (BH3cb) MTST-00-SAR-FDR-2 - FE /DC#6 (BH3cb) MTST-00-SAR-SM-2 - FE /DC#6 (BH3cb) MTST-00-SAR-CNV-D (3se) - FE /DC#6 (BH3cb)

Provide a description of the emission unit (type, method of operation, design parameters, etc.):

Limestone automatic sampling system consisting of: 1 ea primary and secondary sweep samplers, one 25 hp sample crusher (3sg), two sample feeders and one bucket conveyor (3se).

Manufacturer:	**Model number:**	**Serial number:**
MTST-00-SAR-SM-1 – Hebden, Schilbe, and Smith Inc. MTST-00-SAR-FDR-11 – Hebden, Schilbe, and Smith Inc. MTST-00-SAR-CRH-2 (3sg) 1 – Hebden, Schilbe, and Smith Inc. MTST-00-SAR-FDR-21 – Hebden, Schilbe, and Smith Inc. MTST-00-SAR-SM-21 – Hebden, Schilbe, and Smith Inc. MTST-00-SAR-CNV-D (3se) 1 – Hebden, Schilbe, and Smith Inc.	MTST-00-SAR-SM-1 – N/A MTST-00-SAR-FDR-1 – N/A MTST-00-SAR-CRH-2 (3sg) – N/A MTST-00-SAR-FDR-2 – N/A MTST-00-SAR-SM-2 – N/A MTST-00-SAR-CNV-D (3se) – N/A	MTST-00-SAR-SM-1 – N/A MTST-00-SAR-FDR-1 – N/A MTST-00-SAR-CRH-2 (3sg) – N/A MTST-00-SAR-FDR-2 – N/A MTST-00-SAR-SM-2 – N/A MTST-00-SAR-CNV-D (3se) – N/A

Construction date:	**Installation date:**	**Modification date(s):**
MTST-00-SAR-SM-1 - 1994 MTST-00-SAR-FDR-1 - 1994 MTST-00-SAR-CRH-2 (3sg) - 1994 MTST-00-SAR-FDR-2 - 1994 MTST-00-SAR-SM-2 - 1994 MTST-00-SAR-CNV-D (3se) - 1994	MTST-00-SAR-SM-1 - 1994 MTST-00-SAR-FDR-1 - 1994 MTST-00-SAR-CRH-2 (3sg) - 1994 MTST-00-SAR-FDR-2 - 1994 MTST-00-SAR-SM-2 - 1994 MTST-00-SAR-CNV-D (3se) - 1994	MTST-00-SAR-SM-1 – N/A MTST-00-SAR-FDR-1 – N/A MTST-00-SAR-CRH-2 (3sg) – N/A MTST-00-SAR-FDR-2 – N/A MTST-00-SAR-SM-2 – N/A MTST-00-SAR-CNV-D (3se) – N/A

Design Capacity (examples: furnaces - tons/hr, tanks - gallons):

MTST-00-SAR-SM-1 - 1994

MTST-00-SAR-FDR-1 - 1994

MTST-00-SAR-CRH-2 (3sg) - 1994

MTST-00-SAR-FDR-2 - 1994

MTST-00-SAR-SM-2 - 1994 MTST-00-SAR-CNV-D (3se) - 1994**2250 lbs/hr**		
Maximum Hourly Throughput: MTST-00-SAR-SM-1 – 7 TPH MTST-00-SAR-FDR-1 – 7 TPH MTST-00-SAR-CRH-2 (3sg) – 7 TPH MTST-00-SAR-FDR-2 – 7 TPH MTST-00-SAR-SM-2 – 7 TPH MTST-00-SAR-CNV-D (3se) – 7 TPH **2250 Lbs**	**Maximum Annual Throughput:** MTST-00-SAR-SM-1 – 61,320 TN MTST-00-SAR-FDR-1 - 61,320 TN MTST-00-SAR-CRH-2 (3sg) - 61,320 TN MTST-00-SAR-FDR-2 - 61,320 TN MTST-00-SAR-SM-2 - 61,320 TN MTST-00-SAR-CNV-D (3se) – 61,320 TN **9855 TN**	**Maximum Operating Schedule:** MTST-00-SAR-SM-1 - 8760 HR/YR MTST-00-SAR-FDR-1 - 8760 HR/YR MTST-00-SAR-CRH-2 (3sg) - 8760 HR/YR MTST-00-SAR-FDR-2 - 8760 HR/YR MTST-00-SAR-SM-2 – 8760 HR/YR MTST-00-SAR-CNV-D (3se) - 8760 HR/YR

Fuel Usage Data **(fill out all applicable fields)**

Does this emission unit combust fuel? ___Yes __X_ No	**If yes, is it?** **___ Indirect Fired ___Direct Fired**
Maximum design heat input and/or maximum horsepower rating: N/A	**Type and Btu/hr rating of burners:** N/A

List the primary fuel type(s) and if applicable, the secondary fuel type(s). For each fuel type listed, provide the maximum hourly and annual fuel usage for each.
N/A

Describe each fuel expected to be used during the term of the permit.

Fuel Type	Max. Sulfur Content	Max. Ash Content	BTU Value
N/A	N/A	N/A	N/A

Emissions Data		
Criteria Pollutants	Potential Emissions	
	PPH	TPY
Carbon Monoxide (CO)	N/A	N/A
Nitrogen Oxides (NO_X)	N/A	N/A
Lead (Pb)	N/A	N/A
Particulate Matter ($PM_{2.5}$)	N/A	N/A
Particulate Matter (PM_{10})	2.78E-04	5.19E-06
Total Particulate Matter (TSP)	5.89E-04	1.10E-05
Sulfur Dioxide (SO_2)	N/A	N/A
Volatile Organic Compounds (VOC)	N/A	N/A
Hazardous Air Pollutants	Potential Emissions	
	PPH	TPY
	N/A	N/A
Regulated Pollutants other than Criteria and HAP	Potential Emissions	
	PPH	TPY
	N/A	N/A

List the method(s) used to calculate the potential emissions (include dates of any stack tests conducted, versions of software used, source and dates of emission factors, etc.).

See Emission Calculations in Attachment I

Applicable Requirements

List all applicable requirements for this emission unit. For each applicable requirement, include the underlying rule/regulation citation and/or construction permit with the condition number. (*Note: Title V permit condition numbers alone are not the underlying applicable requirements*). If an emission limit is calculated based on the type of source and design capacity or if a standard is based on a design parameter, this information should also be included.

In accordance with the information filed in Permit Application R13-1660C, and any amendments thereto, the following maximum throughputs shall not be exceeded, and, at a minimum, the following control equipment shall be installed, maintained, and operated so as to minimize particulate matter emissions:

Equipment ID No.	Description	Maximum Capacity		Control Equipment[1]	Associated Transfer Points		
		TPH	TPY		Location B- Before A- After	ID No.	Control Equipment[1]
Limestone Crushing Circuit							
2sa	Limestone Unloading Hoppers	440	354,000	PE, BH	B A	2ca n/a	PE, BH UG
3se	Sample Crusher Conveyer	440	354,000	FE, BH	B A	n/a 3ca	UG FE
3sg	Sample Crusher	7	261	FE, BH	B A	3ca 3cb	FE BH
4sa	Storage Pile Conveyer	440	354,000	FE	B A	3cb 5c	BH FE
5sa	Storage Pile (30,000 ton)	n/a	354,000	FE	B A	5c n/a	FE UG
6sd	Primary Crusher Conveyer	250	354,000	FE	B A	n/a 7cc	UG BH
n/a	Tramp Metal Magnet Building	250	354,000	FE	n/a	n/a	n/a
7sb	Primary Crusher	250	354,000	FE, BH	B A	7cc 7cc	BH BH
7sd	Shuttle Conveyer	250	354,000	FE	B A	7cc 8ce	BH BH
8sa	Limestone Storage Silo 1 (500 ton)	250	354,000	FE, BH	B	8ce	BH
8sb	Limestone Storage Silo 2 (500 ton)			FE, BH	B	8ce	BH
8sc	Limestone Storage Silo 3 (500 ton)			FE, BH	B	8ce	BH
8sd	Limestone Storage Silo 4 (500 ton)			FE, BH	B	8ce	BH

[1] BH - Baghouse, FE - Full Enclosure, PE - Partial Enclosure, UG - Underground Reclaim

[45CSR13 - Permit No. R13-1660 §A.1.]

(Title V permit condition 6.1.1)

Particulate matter (PM) emissions from the following emission points shall not exceed the specified limitations, and the units shall maintain the minimum collection efficiency:

Control Device ID NO.	Control Device Type	Emission Point ID No.	Maximum Emission Limit (lb/hour)[1]	Maximum Emission Limit (tons/year)	Maximum Emission Limit (gr/dscf)[2]	Maximum Collection Efficiency (%)
2ca	Baghouse	2e	<0.01	<0.01	0.022	99.80
3cb	Baghouse	3e	<0.01	<0.01	0.022	99.80
6cc	Baghouse	6e	<0.01	<0.01	0.022	99.80
7cc*	Baghouse	7e	<0.01	<0.01	0.022	99.80
8ce*	Baghouse	8e	<0.01	<0.01	0.022	99.80

[1] These limits are considered instantaneous limits and represent limits for Total Suspended Particulate and Particulate Matter less than 10 microns.

[2] Pursuant to 40.672(a)(1) and in grains/dry standard cubic feet

**Note – 7cc is listed as Dust Collector #5 and 8ce is listed as Dust Collector #7 in Section 1.0 Emission Table to coincide with plant labeling*

[45CSR13 - Permit No. R13-1660 §A.2., 45CSR16, 40 CFR §60.672(a)(1)]

(Title V permit condition 6.1.2)

The maximum quantity of stone processed by the sample crusher, identified under condition 6.1.1. as 3sg (*MTST-00-SAR-CRH-2*), shall not exceed 7 tons per hour or 261 tons per year. Compliance with the processing limit shall be determined using a rolling yearly total.

[45CSR13 - Permit No. R13-1660 §A.4.]

(Title V permit condition 6.1.4)

The pertinent sections of 40 CFR 60 applicable to this facility include the following:
a. §§60.672(a), (b), & (f) - Particulate matter stack emissions from the Baghouse vents BH2ca, BH3cb, BH6cc, BH7cc and BH8ce shall not exceed 7 percent opacity. Any fugitive emissions from the equipment and transfer points identified in condition 6.1.1 shall not exceed 10 percent opacity
b. The opacity requirement set forth in 6.1.11.a. shall apply at all times except during periods of startup, shutdown, and malfunctions

[45CSR13 - Permit No. R13-1660 §B.4., 45CSR16, 40 CFR §60.11(c), 40 CFR §§ 60,672 (a), (b), & (f)]

(Title V permit condition 6.1.11)

At all times, including periods of startup, shutdown, and malfunction, any affected facility [*limestone equipment as defined in* conditions *6.1.1. and 6.1.2.*] including associated air pollution control equipment shall, to the extent practicable, be maintained and operated in a manner consistent with good air pollution control practice for minimizing emissions. Determination that acceptable operating and maintenance procedures are being used, will be based on information available to the Secretary which may include, but is not limited to, monitoring results, opacity observations, review of operating and maintenance procedures, and inspection of the source.

[45CSR16, 40 C.F.R. § 60.11(d)]

(Title V permit condition 6.1.12)

_X_ Permit Shield

For all applicable requirements listed above, provide monitoring/testing/recordkeeping/reporting which shall be used to demonstrate compliance. If the method is based on a permit or rule, include the condition number or citation. (Note: Each requirement listed above must have an associated method of demonstrating compliance. If there is not already a required method in place, then a method must be proposed.)

At such reasonable time(s) as the Director may designate, the permittee shall conduct or have conducted test(s) to determine compliance with the emission limitations as set forth in condition 6.1.2. Test(s) shall be conducted in accordance with condition 6.3.3. contained herein. The Director, or his duly authorized representative, may, at his option, witness or conduct such test. Should the Director exercise his option to conduct such test(s), the operator shall provide all the necessary sampling connections and sampling ports to be located in such manner as the Director may require, power for test equipment, and the required safety equipment such as scaffolding, railings, and ladders to comply with generally accepted good safety practices.
[45CSR13 - Permit No. R13-1660 §A.11.]
(Title V permit condition 6.3.1)

Each emissions unit with a visible emissions limit contained in this permit section (Section 6) shall be observed visually at least each calendar month during periods of normal facility operation for a sufficient time interval to determine if the unit has any visible emissions using 40 C.F.R. 60 Appendix A, Method 22. If visible emissions from any of the emissions units are observed during these monthly observations, or at any other time, that appear to exceed 50 percent of the allowable visible emission requirement for the emission unit, visible emissions evaluations in accordance with 40 C.F.R. 60 Appendix A, Method 9 shall be conducted as soon as practicable, but no later than one (1) month from the time of the observation. A Method 9 evaluation shall not be required if the visible emissions condition is corrected in a timely manner; the emissions unit is operating at normal operating conditions; and, the cause and corrective measures taken are recorded.
[45CSR13 - Permit No. R13-1660 §A.12.a)]
(Title V permit condition 6.3.2)

The pertinent sections of 40 CFR 60 applicable to this facility include the following:
a. §60.675(c)(1) - In determining compliance with the particulate matter standards in §60.672 (b) [condition *6.1.11*] and (c), the owner or operator shall use Method 9 and the procedures in §60.11, with the following additions:
1. §60.675(c)(1)(i) - The minimum distance between the observer and the emission source shall be 4.57 meters (15 feet).
2. §60.675(c)(1)(ii) - The observer shall, when possible, select a position that minimizes interference from other fugitive emission sources (e.g., road dust). The required observer position relative to the sun (Method 9, Section 2.1) must be followed.
b. §60.675(c)(3) - When determining compliance with the fugitive emissions standard for any affected facility described under §60.672(b) of 40 CFR Subpart OOO [*condition 6.1.11.*], the duration of the Method 9 observations may be reduced from 3 hours (thirty 6-minute averages) to 1 hour (ten 6-minute averages) only if the following conditions apply
1. §60.675(c)(3)(ii) - There are no individual readings greater than 10 percent opacity; and
2. §60.675(c)(3)(ii) - There are no more than 3 readings of 10 percent for the 1-hour period
c. §60.675(g) - If, after 30 days notice for an initially scheduled performance test, there is delay (due to operational problems, etc.) in conducting any rescheduled performance test required in this section, the owner or operator of an affected facility shall submit a notice to the Administrator at least 7 days prior to any rescheduled performance test.
[45CSR13 - Permit No. R13-1660 §B.4.]
(Title V permit condition 6.3.3)

With regard to any testing required by the Director, the permittee shall submit to the Director of Air Quality a test protocol detailing the proposed test methods, the date, and the time the proposed testing is to take place, as well as identifying the sampling locations and other relevant information. The test protocol must be received by the Director no less than thirty (30) days prior to the date the testing is to take place. Test results shall be submitted to the Director no more than sixty (60) days after the date the testing takes place.
[45CSR13 - Permit No. R13-1660 §B.6.]
(Title V permit condition 6.3.4)

A record of each visible emissions observation as required in permit condition 6.3.2. and/or 6.3.3. shall be maintained, including any data required by 40 C.F.R. 60 Appendix A, Method 22 or Method 9, whichever is appropriate. The record shall include, at a minimum, the date, time, name of the emission unit, the applicable visible emissions requirement, the results of the observation, and the name of the observer.
[45CSR13 - Permit No. R13-1660 §A.12.b)]
(Title V permit condition 6.4.1)

For the purposes of determining compliance with maximum throughput limits set forth in conditions 6.1.3., 6.1.4., and 6.1.5. the applicant shall maintain monthly records of the throughputs of the specified materials. For the purposes of determining compliance with the water truck requirement in condition 6.1.7., the applicant shall maintain a daily and monthly record of water truck usage. Such records shall be retained by the permittee for at least five (5) years. Certified records shall be made available to the Director or his/her duly authorized representative upon request.
[45CSR13 - Permit No. R13-1660 §B.7.]
(Title V permit condition 6.4.2)

The pertinent sections of 40 CFR 60 applicable to this facility include the following:
a. §60.676(f) - The owner or operator of any affected facility shall submit written reports of the results of all performance tests conducted to demonstrate compliance with the standards set forth in §60.672 of Subpart OOO, including reports of opacity observations made using Method 9 to demonstrate compliance with §60.672(b) [*condition 6.1.11.*], (c), and (f).
b. §60.7(a) - Any owner or operator subject to the provisions of this part [*40 CFR 60*] shall furnish written notification as follows:
§60.7(a) (4) - A notification of any physical or operational change to an existing facility which may increase the emission rate of any air pollutant to which a standard applies.
c. §60.7(b) - Any owner or operator subject to the provisions of this part [*40 CFR 60*] shall maintain records of the occurrence and duration of any startup, shutdown, or malfunction in the operation of an affected facility; any malfunction of the air pollution control equipment.
[45CSR13 - Permit No. R13-1660 §B.4.]
(Title V permit condition 6.5.1)

All notifications and reports required pursuant to 40 CFR 60 under §60.7 shall be forwarded to the WVDAQ and USEPA as outlined in permit condition 3.5.3.
[45CSR13 - Permit No. R13-1660 §B.8.]
(Title V permit condition 6.5.2)

Are you in compliance with all applicable requirements for this emission unit? Yes

If no, complete the **Schedule of Compliance Form** as **ATTACHMENT F.**

ATTACHMENT E

SOURCES FOR EMISSION POINT MS40

LIMESTONE STORAGE DOME & LIMESTONE RECLAIM FEEDER

(MTST-00-BLD-LS-D (5sa), MTST-00-SAR-FDR-2A, MTST-00-SAR-FDR-2B, MTST-00-SAR-FDR-2C)

ATTACHMENT E - Emission Unit Form

Emission Unit Description	*Limestone Reclaim*	
Emission unit ID number: MTST-00-BLD-LS-D (5sa) MTST-00-SAR-FDR-2A MTST-00-SAR-FDR-2B MTST-00-SAR-FDR-2C	**Emission unit name:** Sources for emission point MS40	**List any control devices associated with this emission unit:** MTST-00-BLD-LS-D (5sa) - FE MTST-00-SAR-FDR-2A - UG / BH6cc (DC#4) MTST-00-SAR-FDR-2B - UG / BH6cc (DC#4) MTST-00-SAR-FDR-2C - UG / BH6cc (DC#4)

Provide a description of the emission unit (type, method of operation, design parameters, etc.):

Concrete Limestone Storage Dome (5sa)

Three Vibratory Limestone Reclaim Feeders to Conveyor MTST-00-SAR-CNV-B

Manufacturer:	**Model number:**	**Serial number:**
MTST-00-BLD-LS-D (5sa) - Horrell Harrington Engineering MTST-00-SAR-FDR-2A - Kinergy MTST-00-SAR-FDR-2B - Kinergy MTST-00-SAR-FDR-2C - Kinergy	MTST-00-BLD-LS-D (5sa) –N/A MTST-00-SAR-FDR-2A- KDF-24 HDDT MTST-00-SAR-FDR-2B- KDF-24 HDDT MTST-00-SAR-FDR-2C - KDF-24 HDDT	MTST-00-BLD-LS-D (5sa) –N/A MTST-00-SAR-FDR-2A- N/A MTST-00-SAR-FDR-2B- N/A MTST-00-SAR-FDR-2C - N/A
Construction date:	**Installation date:**	**Modification date(s):**
MTST-00-BLD-LS-D (5sa) – 1997 MTST-00-SAR-FDR-2A- 1994 MTST-00-SAR-FDR-2B- 1994 MTST-00-SAR-FDR-2C - 1994	MTST-00-BLD-LS-D (5sa) –N/A MTST-00-SAR-FDR-2A- 1994 MTST-00-SAR-FDR-2B- 1994 MTST-00-SAR-FDR-2C - 1994	MTST-00-BLD-LS-D (5sa) –N/A MTST-00-SAR-FDR-2A- N/A MTST-00-SAR-FDR-2B- N/A MTST-00-SAR-FDR-2C - N/A

Design Capacity (examples: furnaces - tons/hr, tanks - gallons):

MTST-00-BLD-LS-D (5sa) – 10,000 tons

Maximum Hourly Throughput:	**Maximum Annual Throughput:**	**Maximum Operating Schedule:**
MTST-00-BLD-LS-D (5sa) – 400 TN MTST-00-SAR-FDR-2A- 400 TN MTST-00-SAR-FDR-2B- 400 TN MTST-00-SAR-FDR-2C - 400 TN	MTST-00-BLD-LS-D (5sa)- 3,504,000 TN MTST-00-SAR-FDR-2A- 3,504,000 TN MTST-00-SAR-FDR-2B- 3,504,000 TN MTST-00-SAR-FDR-2C - 3,504,000 TN	MTST-00-BLD-LS-D (5sa)- 8760 HR/YR MTST-00-SAR-FDR-2A- 8760 HR/YR MTST-00-SAR-FDR-2B- 8760 HR/YR MTST-00-SAR-FDR-2C - 8760 HR/YR

Fuel Usage Data (fill out all applicable fields)			
Does this emission unit combust fuel? ___Yes __X_ No		**If yes, is it?** **___ Indirect Fired ___Direct Fired**	
Maximum design heat input and/or maximum horsepower rating: N/A		**Type and Btu/hr rating of burners:** N/A	
List the primary fuel type(s) and if applicable, the secondary fuel type(s). For each fuel type listed, provide the maximum hourly and annual fuel usage for each. N/A			
Describe each fuel expected to be used during the term of the permit.			
Fuel Type	**Max. Sulfur Content**	**Max. Ash Content**	**BTU Value**
N/A	N/A	N/A	N/A

Emissions Data		
Criteria Pollutants	Potential Emissions	
	PPH	TPY
Carbon Monoxide (CO)	N/A	N/A
Nitrogen Oxides (NO_X)	N/A	N/A
Lead (Pb)	N/A	N/A
Particulate Matter ($PM_{2.5}$)	N/A	N/A
Particulate Matter (PM_{10})	0.02	0.01
Total Particulate Matter (TSP)	0.04	0.02
Sulfur Dioxide (SO_2)	N/A	N/A
Volatile Organic Compounds (VOC)	N/A	N/A
Hazardous Air Pollutants	Potential Emissions	
	PPH	TPY
	N/A	N/A
Regulated Pollutants other than Criteria and HAP	Potential Emissions	
	PPH	TPY
	N/A	N/A

List the method(s) used to calculate the potential emissions (include dates of any stack tests conducted, versions of software used, source and dates of emission factors, etc.).

See Emission Calculations in Attachment I

Applicable Requirements

List all applicable requirements for this emission unit. For each applicable requirement, include the underlying rule/regulation citation and/or construction permit with the condition number. (*Note: Title V permit condition numbers alone are not the underlying applicable requirements*). If an emission limit is calculated based on the type of source and design capacity or if a standard is based on a design parameter, this information should also be included.

In accordance with the information filed in Permit Application R13-1660C, and any amendments thereto, the following maximum throughputs shall not be exceeded, and, at a minimum, the following control equipment shall be installed, maintained, and operated so as to minimize particulate matter emissions:

Equipment ID No.	Description	Maximum Capacity		Control Equipment[1]	Associated Transfer Points		
		TPH	TPY		Location B- Before A- After	ID No.	Control Equipment[1]
Limestone Crushing Circuit							
2sa	Limestone Unloading Hoppers	440	354,000	PE, BH	B A	2ca n/a	PE, BH UG
3se	Sample Crusher Conveyer	440	354,000	FE, BH	B A	n/a 3ca	UG FE
3sg	Sample Crusher	7	261	FE, BH	B A	3ca 3cb	FE BH
4sa	Storage Pile Conveyer	440	354,000	FE	B A	3cb 5c	BH FE
5sa	Storage Pile (30,000 ton)	n/a	354,000	FE	B A	5c n/a	FE UG
6sd	Primary Crusher Conveyer	250	354,000	FE	B A	n/a 7cc	UG BH
n/a	Tramp Metal Magnet Building	250	354,000	FE	n/a	n/a	n/a
7sb	Primary Crusher	250	354,000	FE, BH	B A	7cc 7cc	BH BH
7sd	Shuttle Conveyer	250	354,000	FE	B A	7cc 8ce	BH BH
8sa	Limestone Storage Silo 1 (500 ton)	250	354,000	FE, BH	B	8ce	BH
8sb	Limestone Storage Silo 2 (500 ton)			FE, BH	B	8ce	BH
8sc	Limestone Storage Silo 3 (500 ton)			FE, BH	B	8ce	BH
8sd	Limestone Storage Silo 4 (500 ton)			FE, BH	B	8ce	BH

[1] BH - Baghouse, FE - Full Enclosure, PE - Partial Enclosure, UG - Underground Reclaim

[45CSR13 - Permit No. R13-1660 §A.1.]

(Title V permit condition 6.1.1)

Particulate matter (PM) emissions from the following emission points shall not exceed the specified limitations, and the units shall maintain the minimum collection efficiency:

Control Device ID NO.	Control Device Type	Emission Point ID No.	Maximum Emission Limit (lb/hour)[1]	Maximum Emission Limit (tons/year)	Maximum Emission Limit (gr/dscf)[2]	Maximum Collection Efficiency (%)
2ca	Baghouse	2e	<0.01	<0.01	0.022	99.80
3cb	Baghouse	3e	<0.01	<0.01	0.022	99.80
6cc	Baghouse	6e	<0.01	<0.01	0.022	99.80
7cc*	Baghouse	7e	<0.01	<0.01	0.022	99.80
8ce*	Baghouse	8e	<0.01	<0.01	0.022	99.80

[1] These limits are considered instantaneous limits and represent limits for Total Suspended Particulate and Particulate Matter less than 10 microns.

[2] Pursuant to 40.672(a)(1) and in grains/dry standard cubic feet

**Note – 7cc is listed as Dust Collector #5 and 8ce is listed as Dust Collector #7 in Section 1.0 Emission Table to coincide with plant labeling*

[45CSR13 - Permit No. R13-1660 §A.2., 45CSR16, 40 CFR §60.672(a)(1)]

(Title V permit condition 6.1.2)

The pertinent sections of 40 CFR 60 applicable to this facility include the following:
a. §§60.672(a), (b), & (f) - Particulate matter stack emissions from the Baghouse vents BH2ca, BH3cb, BH6cc, BH7cc and BH8ce shall not exceed 7 percent opacity. Any fugitive emissions from the equipment and transfer points identified in condition 6.1.1 shall not exceed 10 percent opacity
b. The opacity requirement set forth in 6.1.11.a. shall apply at all times except during periods of startup, shutdown, and malfunctions
[45CSR13 - Permit No. R13-1660 §B.4., 45CSR16, 40 CFR §60.11(c), 40 CFR §§ 60,672 (a), (b), & (f)]
(Title V permit condition 6.1.11)

At all times, including periods of startup, shutdown, and malfunction, any affected facility [*limestone equipment as defined in* conditions *6.1.1. and 6.1.2.*] including associated air pollution control equipment shall, to the extent practicable, be maintained and operated in a manner consistent with good air pollution control practice for minimizing emissions. Determination that acceptable operating and maintenance procedures are being used, will be based on information available to the Secretary which may include, but is not limited to, monitoring results, opacity observations, review of operating and maintenance procedures, and inspection of the source.
[45CSR16, 40 C.F.R. § 60.11(d)]
(Title V permit condition 6.1.12)

_X_ Permit Shield

For all applicable requirements listed above, provide monitoring/testing/recordkeeping/reporting which shall be used to demonstrate compliance. If the method is based on a permit or rule, include the condition number or citation. (Note: Each requirement listed above must have an associated method of demonstrating compliance. If there is not already a required method in place, then a method must be proposed.)

At such reasonable time(s) as the Director may designate, the permittee shall conduct or have conducted test(s) to determine compliance with the emission limitations as set forth in condition 6.1.2. Test(s) shall be conducted in accordance with condition 6.3.3. contained herein. The Director, or his duly authorized representative, may, at his option, witness or conduct such test. Should the Director exercise his option to conduct such test(s), the operator shall provide all the necessary sampling connections and sampling ports to be located in such manner as the Director may require, power for test equipment, and the required safety equipment such as scaffolding, railings, and ladders to comply with generally accepted good safety practices.
[45CSR13 - Permit No. R13-1660 §A.11.]
(Title V permit condition 6.3.1)

Each emissions unit with a visible emissions limit contained in this permit section (Section 6) shall be observed visually at least each calendar month during periods of normal facility operation for a sufficient time interval to determine if the unit has any visible emissions using 40 C.F.R. 60 Appendix A, Method 22. If visible emissions from any of the emissions units are observed during these monthly observations, or at any other time, that appear to exceed 50 percent of the allowable visible emission requirement for the emission unit, visible emissions evaluations in accordance with 40 C.F.R. 60 Appendix A, Method 9 shall be conducted as soon as practicable, but no later than one (1) month from the time of the observation. A Method 9 evaluation shall not be required if the visible emissions condition is corrected in a timely manner; the emissions unit is operating at normal operating conditions; and, the cause and corrective measures taken are recorded.
[45CSR13 - Permit No. R13-1660 §A.12.a)]
(Title V permit condition 6.3.2)

The pertinent sections of 40 CFR 60 applicable to this facility include the following:
a. §60.675(c)(1) - In determining compliance with the particulate matter standards in §60.672 (b) [condition *6.1.11*] and (c), the owner or operator shall use Method 9 and the procedures in §60.11, with the following additions:
1. §60.675(c)(1)(i) - The minimum distance between the observer and the emission source shall be 4.57 meters (15 feet).
2. §60.675(c)(1)(ii) - The observer shall, when possible, select a position that minimizes interference from other fugitive emission sources (e.g., road dust). The required observer position relative to the sun (Method 9, Section 2.1) must be followed.
b. §60.675(c)(3) - When determining compliance with the fugitive emissions standard for any affected facility described under §60.672(b) of 40 CFR Subpart OOO [*condition 6.1.11.*], the duration of the Method 9 observations may be reduced from 3 hours (thirty 6-minute averages) to 1 hour (ten 6-minute averages) only if the following conditions apply
1. §60.675(c)(3)(ii) - There are no individual readings greater than 10 percent opacity; and
2. §60.675(c)(3)(ii) - There are no more than 3 readings of 10 percent for the 1-hour period
c. §60.675(g) - If, after 30 days notice for an initially scheduled performance test, there is delay (due to operational problems, etc.) in conducting any rescheduled performance test required in this section, the owner or operator of an affected facility shall submit a notice to the Administrator at least 7 days prior to any rescheduled performance test.
[45CSR13 - Permit No. R13-1660 §B.4.]
(Title V permit condition 6.3.3)

With regard to any testing required by the Director, the permittee shall submit to the Director of Air Quality a test protocol detailing the proposed test methods, the date, and the time the proposed testing is to take place, as well as identifying the sampling locations and other relevant information. The test protocol must be received by the Director no less than thirty (30) days prior to the date the testing is to take place. Test results shall be submitted to the Director no more than sixty (60) days after the date the testing takes place.
[45CSR13 - Permit No. R13-1660 §B.6.]
(Title V permit condition 6.3.4)

A record of each visible emissions observation as required in permit condition 6.3.2. and/or 6.3.3. shall be maintained, including any data required by 40 C.F.R. 60 Appendix A, Method 22 or Method 9, whichever is appropriate. The record shall include, at a minimum, the date, time, name of the emission unit, the applicable visible emissions requirement, the results of the observation, and the name of the observer.
[45CSR13 - Permit No. R13-1660 §A.12.b)]
(Title V permit condition 6.4.1)

The pertinent sections of 40 CFR 60 applicable to this facility include the following:
a. §60.676(f) - The owner or operator of any affected facility shall submit written reports of the results of all performance tests conducted to demonstrate compliance with the standards set forth in §60.672 of Subpart OOO, including reports of opacity observations made using Method 9 to demonstrate compliance with §60.672(b) [*condition 6.1.11.*], (c), and (f).
b. §60.7(a) - Any owner or operator subject to the provisions of this part [*40 CFR 60*] shall furnish written notification as follows:
§60.7(a) (4) - A notification of any physical or operational change to an existing facility which may increase the emission rate of any air pollutant to which a standard applies.
c. §60.7(b) - Any owner or operator subject to the provisions of this part [*40 CFR 60*] shall maintain records of the occurrence and duration of any startup, shutdown, or malfunction in the operation of an affected facility; any malfunction of the air pollution control equipment.
[45CSR13 - Permit No. R13-1660 §B.4.]
(Title V permit condition 6.5.1)

All notifications and reports required pursuant to 40 CFR 60 under §60.7 shall be forwarded to the WVDAQ and USEPA as outlined in permit condition 3.5.3.
[45CSR13 - Permit No. R13-1660 §B.8.]
(Title V permit condition 6.5.2)

Are you in compliance with all applicable requirements for this emission unit? Yes

If no, complete the **Schedule of Compliance Form** as **ATTACHMENT F.**

ATTACHMENT E

SOURCES FOR EMISSION POINT MS41

LIMESTONE CONVEYOR

(MTST-00-SAR-CNV-B)

ATTACHMENT E - Emission Unit Form

Emission Unit Description	*Limestone Reclaim Conveyor*	
Emission unit ID number: MTST-00-SAR-CNV-B	**Emission unit name:** Source for Emission point MS41	**List any control devices associated with this emission unit:** FE / BH6cc (DC#4)

Provide a description of the emission unit (type, method of operation, design parameters, etc.)

36 inch Limestone Conveyor (6sd) from Reclaim Feeders to Limestone Crusher MTST-00-SAR-CRH-1

Manufacturer: Montague	**Model number:** N/A	**Serial number:** N/A
Construction date: 1994	**Installation date:** 1994	**Modification date(s):** N/A

Design Capacity (examples: furnaces - tons/hr, tanks - gallons):

400 TPH

Maximum Hourly Throughput: 400 TN	**Maximum Annual Throughput:** 3,504,000 TN	**Maximum Operating Schedule:** 8,760 HR/YR

Fuel Usage Data **(fill out all applicable fields)**

Does this emission unit combust fuel? ___Yes __X_ No	**If yes, is it?** ___ **Indirect Fired** ___**Direct Fired**
Maximum design heat input and/or maximum horsepower rating: N/A	**Type and Btu/hr rating of burners:** N/A

List the primary fuel type(s) and if applicable, the secondary fuel type(s). For each fuel type listed, provide the maximum hourly and annual fuel usage for each.

N/A

Describe each fuel expected to be used during the term of the permit.

Fuel Type	Max. Sulfur Content	Max. Ash Content	BTU Value
N/A	N/A	N/A	N/A

Emissions Data		
Criteria Pollutants	Potential Emissions	
	PPH	TPY
Carbon Monoxide (CO)	N/A	N/A
Nitrogen Oxides (NO_X)	N/A	N/A
Lead (Pb)	N/A	N/A
Particulate Matter ($PM_{2.5}$)	N/A	N/A
Particulate Matter (PM_{10})	5.87E-03	2.57E-02
Total Particulate Matter (TSP)	1.24E-02	5.43E-02
Sulfur Dioxide (SO_2)	N/A	N/A
Volatile Organic Compounds (VOC)	N/A	N/A
Hazardous Air Pollutants	Potential Emissions	
	PPH	TPY
	N/A	N/A
Regulated Pollutants other than Criteria and HAP	Potential Emissions	
	PPH	TPY
	N/A	N/A

List the method(s) used to calculate the potential emissions (include dates of any stack tests conducted, versions of software used, source and dates of emission factors, etc.).

See Emission Calculations in Attachment I

Applicable Requirements

List all applicable requirements for this emission unit. For each applicable requirement, include the underlying rule/regulation citation and/or construction permit with the condition number. (*Note: Title V permit condition numbers alone are not the underlying applicable requirements*). If an emission limit is calculated based on the type of source and design capacity or if a standard is based on a design parameter, this information should also be included.

In accordance with the information filed in Permit Application R13-1660C, and any amendments thereto, the following maximum throughputs shall not be exceeded, and, at a minimum, the following control equipment shall be installed, maintained, and operated so as to minimize particulate matter emissions:

Equipment ID No.	Description	Maximum Capacity		Control Equipment[1]	Associated Transfer Points		
		TPH	TPY		Location B- Before A- After	ID No.	Control Equipment[1]
Limestone Crushing Circuit							
2sa	Limestone Unloading Hoppers	440	354,000	PE, BH	B A	2ca n/a	PE, BH UG
3se	Sample Crusher Conveyer	440	354,000	FE, BH	B A	n/a 3ca	UG FE
3sg	Sample Crusher	7	261	FE, BH	B A	3ca 3cb	FE BH
4sa	Storage Pile Conveyer	440	354,000	FE	B A	3cb 5c	BH FE
5sa	Storage Pile (30,000 ton)	n/a	354,000	FE	B A	5c n/a	FE UG
6sd	Primary Crusher Conveyer	250	354,000	FE	B A	n/a 7cc	UG BH
n/a	Tramp Metal Magnet Building	250	354,000	FE	n/a	n/a	n/a
7sb	Primary Crusher	250	354,000	FE, BH	B A	7cc 7cc	BH BH
7sd	Shuttle Conveyer	250	354,000	FE	B A	7cc 8ce	BH BH
8sa	Limestone Storage Silo 1 (500 ton)	250	354,000	FE, BH	B	8ce	BH
8sb	Limestone Storage Silo 2 (500 ton)			FE, BH	B	8ce	BH
8sc	Limestone Storage Silo 3 (500 ton)			FE, BH	B	8ce	BH
8sd	Limestone Storage Silo 4 (500 ton)			FE, BH	B	8ce	BH

[1] BH - Baghouse, FE - Full Enclosure, PE - Partial Enclosure, UG - Underground Reclaim

[45CSR13 - Permit No. R13-1660 §A.1.]

(Title V permit condition 6.1.1)

Particulate matter (PM) emissions from the following emission points shall not exceed the specified limitations, and the units shall maintain the minimum collection efficiency:

Control Device ID NO.	Control Device Type	Emission Point ID No.	Maximum Emission Limit (lb/hour)[1]	Maximum Emission Limit (tons/year)	Maximum Emission Limit (gr/dscf)[2]	Maximum Collection Efficiency (%)
2ca	Baghouse	2e	<0.01	<0.01	0.022	99.80
3cb	Baghouse	3e	<0.01	<0.01	0.022	99.80
6cc	Baghouse	6e	<0.01	<0.01	0.022	99.80
7cc*	Baghouse	7e	<0.01	<0.01	0.022	99.80
8ce*	Baghouse	8e	<0.01	<0.01	0.022	99.80

[1] These limits are considered instantaneous limits and represent limits for Total Suspended Particulate and Particulate Matter less than 10 microns.

[2] Pursuant to 40.672(a)(1) and in grains/dry standard cubic feet

**Note – 7cc is listed as Dust Collector #5 and 8ce is listed as Dust Collector #7 in Section 1.0 Emission Table to coincide with plant labeling*

[45CSR13 - Permit No. R13-1660 §A.2., 45CSR16, 40 CFR §60.672(a)(1)]

(Title V permit condition 6.1.2)

The pertinent sections of 40 CFR 60 applicable to this facility include the following:
a. §§60.672(a), (b), & (f) - Particulate matter stack emissions from the Baghouse vents BH2ca, BH3cb, BH6cc, BH7cc and BH8ce shall not exceed 7 percent opacity. Any fugitive emissions from the equipment and transfer points identified in condition 6.1.1 shall not exceed 10 percent opacity
b. The opacity requirement set forth in 6.1.11.a. shall apply at all times except during periods of startup, shutdown, and malfunctions

[45CSR13 - Permit No. R13-1660 §B.4., 45CSR16, 40 CFR §60.11(c), 40 CFR §§ 60,672 (a), (b), & (f)]
(Title V permit condition 6.1.11)

At all times, including periods of startup, shutdown, and malfunction, any affected facility [*limestone equipment as defined in* conditions *6.1.1. and 6.1.2.*] including associated air pollution control equipment shall, to the extent practicable, be maintained and operated in a manner consistent with good air pollution control practice for minimizing emissions. Determination that acceptable operating and maintenance procedures are being used, will be based on information available to the Secretary which may include, but is not limited to, monitoring results, opacity observations, review of operating and maintenance procedures, and inspection of the source.

[45CSR16, 40 C.F.R. § 60.11(d)]
(Title V permit condition 6.1.12)

__X__ Permit Shield

For all applicable requirements listed above, provide monitoring/testing/recordkeeping/reporting which shall be used to demonstrate compliance. If the method is based on a permit or rule, include the condition number or citation. (Note: Each requirement listed above must have an associated method of demonstrating compliance. If there is not already a required method in place, then a method must be proposed.)

At such reasonable time(s) as the Director may designate, the permittee shall conduct or have conducted test(s) to determine compliance with the emission limitations as set forth in condition 6.1.2. Test(s) shall be conducted in accordance with condition 6.3.3. contained herein. The Director, or his duly authorized representative, may, at his option, witness or conduct such test. Should the Director exercise his option to conduct such test(s), the operator shall provide all the necessary sampling connections and sampling ports to be located in such manner as the Director may require, power for test equipment, and the required safety equipment such as scaffolding, railings, and ladders to comply with generally accepted good safety practices.
[45CSR13 - Permit No. R13-1660 §A.11.]
(Title V permit condition 6.3.1)

Each emissions unit with a visible emissions limit contained in this permit section (Section 6) shall be observed visually at least each calendar month during periods of normal facility operation for a sufficient time interval to determine if the unit has any visible emissions using 40 C.F.R. 60 Appendix A, Method 22. If visible emissions from any of the emissions units are observed during these monthly observations, or at any other time, that appear to exceed 50 percent of the allowable visible emission requirement for the emission unit, visible emissions evaluations in accordance with 40 C.F.R. 60 Appendix A, Method 9 shall be conducted as soon as practicable, but no later than one (1) month from the time of the observation. A Method 9 evaluation shall not be required if the visible emissions condition is corrected in a timely manner; the emissions unit is operating at normal operating conditions; and, the cause and corrective measures taken are recorded.
[45CSR13 - Permit No. R13-1660 §A.12.a)]
(Title V permit condition 6.3.2)

The pertinent sections of 40 CFR 60 applicable to this facility include the following:
a. §60.675(c)(1) - In determining compliance with the particulate matter standards in §60.672 (b) [condition *6.1.11*] and (c), the owner or operator shall use Method 9 and the procedures in §60.11, with the following additions:
1. §60.675(c)(1)(i) - The minimum distance between the observer and the emission source shall be 4.57 meters (15 feet).
2. §60.675(c)(1)(ii) - The observer shall, when possible, select a position that minimizes interference from other fugitive emission sources (e.g., road dust). The required observer position relative to the sun (Method 9, Section 2.1) must be followed.
b. §60.675(c)(3) - When determining compliance with the fugitive emissions standard for any affected facility described under §60.672(b) of 40 CFR Subpart OOO [*condition 6.1.11.*], the duration of the Method 9 observations may be reduced from 3 hours (thirty 6-minute averages) to 1 hour (ten 6-minute averages) only if the following conditions apply
1. §60.675(c)(3)(ii) - There are no individual readings greater than 10 percent opacity; and
2. §60.675(c)(3)(ii) - There are no more than 3 readings of 10 percent for the 1-hour period
c. §60.675(g) - If, after 30 days notice for an initially scheduled performance test, there is delay (due to operational problems, etc.) in conducting any rescheduled performance test required in this section, the owner or operator of an affected facility shall submit a notice to the Administrator at least 7 days prior to any rescheduled performance test.
[45CSR13 - Permit No. R13-1660 §B.4.]
(Title V permit condition 6.3.3)

With regard to any testing required by the Director, the permittee shall submit to the Director of Air Quality a test protocol detailing the proposed test methods, the date, and the time the proposed testing is to take place, as well as identifying the sampling locations and other relevant information. The test protocol must be received by the Director no less than thirty (30) days prior to the date the testing is to take place. Test results shall be submitted to the Director no more than sixty (60) days after the date the testing takes place.
[45CSR13 - Permit No. R13-1660 §B.6.]
(Title V permit condition 6.3.4)

A record of each visible emissions observation as required in permit condition 6.3.2. and/or 6.3.3. shall be maintained, including any data required by 40 C.F.R. 60 Appendix A, Method 22 or Method 9, whichever is appropriate. The record shall include, at a minimum, the date, time, name of the emission unit, the applicable visible emissions requirement, the results of the observation, and the name of the observer.
[45CSR13 - Permit No. R13-1660 §A.12.b)]
(Title V permit condition 6.4.1)

The pertinent sections of 40 CFR 60 applicable to this facility include the following:
a. §60.676(f) - The owner or operator of any affected facility shall submit written reports of the results of all performance tests conducted to demonstrate compliance with the standards set forth in §60.672 of Subpart OOO, including reports of opacity observations made using Method 9 to demonstrate compliance with §60.672(b) [*condition 6.1.11.*], (c), and (f).
b. §60.7(a) - Any owner or operator subject to the provisions of this part [*40 CFR 60*] shall furnish written notification as follows:
§60.7(a) (4) - A notification of any physical or operational change to an existing facility which may increase the emission rate of any air pollutant to which a standard applies.
c. §60.7(b) - Any owner or operator subject to the provisions of this part [*40 CFR 60*] shall maintain records of the occurrence and duration of any startup, shutdown, or malfunction in the operation of an affected facility; any malfunction of the air pollution control equipment.
[45CSR13 - Permit No. R13-1660 §B.4.]
(Title V permit condition 6.5.1)

All notifications and reports required pursuant to 40 CFR 60 under §60.7 shall be forwarded to the WVDAQ and USEPA as outlined in permit condition 3.5.3.
[45CSR13 - Permit No. R13-1660 §B.8.]
(Title V permit condition 6.5.2)

Are you in compliance with all applicable requirements for this emission unit? Yes

If no, complete the **Schedule of Compliance Form** as **ATTACHMENT F.**

ATTACHMENT E

SOURCES FOR EMISSION POINT MS42

LIMESTONE CRUSHER

(MTST-00-SAR-CRH-1)

ATTACHMENT E - Emission Unit Form

Emission Unit Description	*Limestone Crusher*	
Emission unit ID number: MTST-00-SAR-CRH-1	**Emission unit name:** Source for emission point MS42	**List any control devices associated with this emission unit:** FE / DC#5 (*BH7cc*)

Provide a description of the emission unit (type, method of operation, design parameters, etc.)
900hp Hammermill Limestone Crusher (7sb) to Limestone Conveyor MTST-00-SAR-CNV-C

Manufacturer:	**Model number:**	**Serial number:**
Pennsylvania Crushers	T 48 X 82	5995
Construction date: 1994	**Installation date:** 1994	**Modification date(s):** N/A

Design Capacity (examples: furnaces - tons/hr, tanks - gallons):
400 TPH

Maximum Hourly Throughput:	**Maximum Annual Throughput:**	**Maximum Operating Schedule:**
400 TN	3,504,000 TN	8,760 HR/YR

Fuel Usage Data **(fill out all applicable fields)**

Does this emission unit combust fuel? ___Yes __X_ No	**If yes, is it?** ___ **Indirect Fired** ___**Direct Fired**
Maximum design heat input and/or maximum horsepower rating: N/A	**Type and Btu/hr rating of burners:** N/A

List the primary fuel type(s) and if applicable, the secondary fuel type(s). For each fuel type listed, provide the maximum hourly and annual fuel usage for each.
N/A

Describe each fuel expected to be used during the term of the permit.

Fuel Type	Max. Sulfur Content	Max. Ash Content	BTU Value
N/A	N/A	N/A	N/A

Emissions Data		
Criteria Pollutants	Potential Emissions	
	PPH	TPY
Carbon Monoxide (CO)	N/A	N/A
Nitrogen Oxides (NO_X)	N/A	N/A
Lead (Pb)	N/A	N/A
Particulate Matter ($PM_{2.5}$)	N/A	N/A
Particulate Matter (PM_{10})	9.60E-03	4.25E-03
Total Particulate Matter (TSP)	2.16E-02	9.56E-03
Sulfur Dioxide (SO_2)	N/A	N/A
Volatile Organic Compounds (VOC)	N/A	N/A
Hazardous Air Pollutants	Potential Emissions	
	PPH	TPY
	N/A	N/A
Regulated Pollutants other than Criteria and HAP	Potential Emissions	
	PPH	TPY
	N/A	N/A

List the method(s) used to calculate the potential emissions (include dates of any stack tests conducted, versions of software used, source and dates of emission factors, etc.).

See Emission Calculations in Attachment I

Applicable Requirements

List all applicable requirements for this emission unit. For each applicable requirement, include the underlying rule/regulation citation and/or construction permit with the condition number. (*Note: Title V permit condition numbers alone are not the underlying applicable requirements*). If an emission limit is calculated based on the type of source and design capacity or if a standard is based on a design parameter, this information should also be included.

In accordance with the information filed in Permit Application R13-1660C, and any amendments thereto, the following maximum throughputs shall not be exceeded, and, at a minimum, the following control equipment shall be installed, maintained, and operated so as to minimize particulate matter emissions:

Equipment ID No.	Description	Maximum Capacity		Control Equipment[1]	Associated Transfer Points		
		TPH	TPY		Location B- Before A- After	ID No.	Control Equipment[1]
Limestone Crushing Circuit							
2sa	Limestone Unloading Hoppers	440	354,000	PE, BH	B A	2ca n/a	PE, BH UG
3se	Sample Crusher Conveyer	440	354,000	FE, BH	B A	n/a 3ca	UG FE
3sg	Sample Crusher	7	261	FE, BH	B A	3ca 3cb	FE BH
4sa	Storage Pile Conveyer	440	354,000	FE	B A	3cb 5c	BH FE
5sa	Storage Pile (30,000 ton)	n/a	354,000	FE	B A	5c n/a	FE UG
6sd	Primary Crusher Conveyer	250	354,000	FE	B A	n/a 7cc	UG BH
n/a	Tramp Metal Magnet Building	250	354,000	FE	n/a	n/a	n/a
7sb	Primary Crusher	250	354,000	FE, BH	B A	7cc 7cc	BH BH
7sd	Shuttle Conveyer	250	354,000	FE	B A	7cc 8ce	BH BH
8sa	Limestone Storage Silo 1 (500 ton)	250	354,000	FE, BH	B	8ce	BH
8sb	Limestone Storage Silo 2 (500 ton)			FE, BH	B	8ce	BH
8sc	Limestone Storage Silo 3 (500 ton)			FE, BH	B	8ce	BH
8sd	Limestone Storage Silo 4 (500 ton)			FE, BH	B	8ce	BH

[1] BH - Baghouse, FE - Full Enclosure, PE - Partial Enclosure, UG - Underground Reclaim

[45CSR13 - Permit No. R13-1660 §A.1.]

(Title V permit condition 6.1.1)

Particulate matter (PM) emissions from the following emission points shall not exceed the specified limitations, and the units shall maintain the minimum collection efficiency:

Control Device ID NO.	Control Device Type	Emission Point ID No.	Maximum Emission Limit (lb/hour)[1]	Maximum Emission Limit (tons/year)	Maximum Emission Limit (gr/dscf)[2]	Maximum Collection Efficiency (%)
2ca	Baghouse	2e	<0.01	<0.01	0.022	99.80
3cb	Baghouse	3e	<0.01	<0.01	0.022	99.80
6cc	Baghouse	6e	<0.01	<0.01	0.022	99.80
7cc*	Baghouse	7e	<0.01	<0.01	0.022	99.80
8ce*	Baghouse	8e	<0.01	<0.01	0.022	99.80

[1] These limits are considered instantaneous limits and represent limits for Total Suspended Particulate and Particulate Matter less than 10 microns.

[2] Pursuant to 40.672(a)(1) and in grains/dry standard cubic feet

**Note – 7cc is listed as Dust Collector #5 and 8ce is listed as Dust Collector #7 in Section 1.0 Emission Table to coincide with plant labeling*

[45CSR13 - Permit No. R13-1660 §A.2., 45CSR16, 40 CFR §60.672(a)(1)]

(Title V permit condition 6.1.2)

The maximum quantity of stone processed by the primary crusher, identified under condition 6.1.1. as 7sb (*MTST-00-SAR-CRH-1*), shall not exceed 354,000 tons per year. Compliance with the processing limit shall be determined using a rolling yearly total. A rolling yearly total shall mean the sum of the stone processed at any given time for the previous twelve (12) consecutive calendar months.

[45CSR13 - Permit No. R13-1660 §A.3.]

(Title V permit condition 6.1.3)

The pertinent sections of 40 CFR 60 applicable to this facility include the following:
a. §§60.672(a), (b), & (f) - Particulate matter stack emissions from the Baghouse vents BH2ca, BH3cb, BH6cc, BH7cc and BH8ce shall not exceed 7 percent opacity. Any fugitive emissions from the equipment and transfer points identified in condition 6.1.1 shall not exceed 10 percent opacity
b. The opacity requirement set forth in 6.1.11.a. shall apply at all times except during periods of startup, shutdown, and malfunctions

[45CSR13 - Permit No. R13-1660 §B.4., 45CSR16, 40 CFR §60.11(c), 40 CFR §§ 60,672 (a), (b), & (f)]

(Title V permit condition 6.1.11)

At all times, including periods of startup, shutdown, and malfunction, any affected facility [*limestone equipment as defined in* conditions *6.1.1. and 6.1.2.*] including associated air pollution control equipment shall, to the extent practicable, be maintained and operated in a manner consistent with good air pollution control practice for minimizing emissions. Determination that acceptable operating and maintenance procedures are being used, will be based on information available to the Secretary which may include, but is not limited to, monitoring results, opacity observations, review of operating and maintenance procedures, and inspection of the source.

[45CSR16, 40 C.F.R. § 60.11(d)]

(Title V permit condition 6.1.12)

_X___ Permit Shield

For all applicable requirements listed above, provide monitoring/testing/recordkeeping/reporting which shall be used to demonstrate compliance. If the method is based on a permit or rule, include the condition number or citation. (Note: Each requirement listed above must have an associated method of demonstrating compliance. If there is not already a required method in place, then a method must be proposed.)

At such reasonable time(s) as the Director may designate, the permittee shall conduct or have conducted test(s) to determine compliance with the emission limitations as set forth in condition 6.1.2. Test(s) shall be conducted in accordance with condition 6.3.3. contained herein. The Director, or his duly authorized representative, may, at his option, witness or conduct such test. Should the Director exercise his option to conduct such test(s), the operator shall provide all the necessary sampling connections and sampling ports to be located in such manner as the Director may require, power for test equipment, and the required safety equipment such as scaffolding, railings, and ladders to comply with generally accepted good safety practices.
[45CSR13 - Permit No. R13-1660 §A.11.]
(Title V permit condition 6.3.1)

Each emissions unit with a visible emissions limit contained in this permit section (Section 6) shall be observed visually at least each calendar month during periods of normal facility operation for a sufficient time interval to determine if the unit has any visible emissions using 40 C.F.R. 60 Appendix A, Method 22. If visible emissions from any of the emissions units are observed during these monthly observations, or at any other time, that appear to exceed 50 percent of the allowable visible emission requirement for the emission unit, visible emissions evaluations in accordance with 40 C.F.R. 60 Appendix A, Method 9 shall be conducted as soon as practicable, but no later than one (1) month from the time of the observation. A Method 9 evaluation shall not be required if the visible emissions condition is corrected in a timely manner; the emissions unit is operating at normal operating conditions; and, the cause and corrective measures taken are recorded.
[45CSR13 - Permit No. R13-1660 §A.12.a)]
(Title V permit condition 6.3.2)

The pertinent sections of 40 CFR 60 applicable to this facility include the following:
a. §60.675(c)(1) - In determining compliance with the particulate matter standards in §60.672 (b) [condition *6.1.11*] and (c), the owner or operator shall use Method 9 and the procedures in §60.11, with the following additions:
1. §60.675(c)(1)(i) - The minimum distance between the observer and the emission source shall be 4.57 meters (15 feet).
2. §60.675(c)(1)(ii) - The observer shall, when possible, select a position that minimizes interference from other fugitive emission sources (e.g., road dust). The required observer position relative to the sun (Method 9, Section 2.1) must be followed.
b. §60.675(c)(3) - When determining compliance with the fugitive emissions standard for any affected facility described under §60.672(b) of 40 CFR Subpart OOO [*condition 6.1.11.*], the duration of the Method 9 observations may be reduced from 3 hours (thirty 6-minute averages) to 1 hour (ten 6-minute averages) only if the following conditions apply
1. §60.675(c)(3)(ii) - There are no individual readings greater than 10 percent opacity; and
2. §60.675(c)(3)(ii) - There are no more than 3 readings of 10 percent for the 1-hour period
c. §60.675(g) - If, after 30 days notice for an initially scheduled performance test, there is delay (due to operational problems, etc.) in conducting any rescheduled performance test required in this section, the owner or operator of an affected facility shall submit a notice to the Administrator at least 7 days prior to any rescheduled performance test.
[45CSR13 - Permit No. R13-1660 §B.4.]
(Title V permit condition 6.3.3)

With regard to any testing required by the Director, the permittee shall submit to the Director of Air Quality a test protocol detailing the proposed test methods, the date, and the time the proposed testing is to take place, as well as identifying the sampling locations and other relevant information. The test protocol must be received by the Director no less than thirty (30) days prior to the date the testing is to take place. Test results shall be submitted to the Director no more than sixty (60) days after the date the testing takes place.
[45CSR13 - Permit No. R13-1660 §B.6.]
(Title V permit condition 6.3.4)

A record of each visible emissions observation as required in permit condition 6.3.2. and/or 6.3.3. shall be maintained, including any data required by 40 C.F.R. 60 Appendix A, Method 22 or Method 9, whichever is appropriate. The record shall include, at a minimum, the date, time, name of the emission unit, the applicable visible emissions requirement, the results of the observation, and the name of the observer.
[45CSR13 - Permit No. R13-1660 §A.12.b)]
(Title V permit condition 6.4.1)

For the purposes of determining compliance with maximum throughput limits set forth in conditions 6.1.3., 6.1.4., and 6.1.5. the applicant shall maintain monthly records of the throughputs of the specified materials. For the purposes of determining compliance with the water truck requirement in condition 6.1.7., the applicant shall maintain a daily and monthly record of water truck usage. Such records shall be retained by the permittee for at least five (5) years. Certified records shall be made available to the Director or his/her duly authorized representative upon request.
[45CSR13 - Permit No. R13-1660 §B.7.]
(Title V permit condition 6.4.2)

The pertinent sections of 40 CFR 60 applicable to this facility include the following:
a. §60.676(f) - The owner or operator of any affected facility shall submit written reports of the results of all performance tests conducted to demonstrate compliance with the standards set forth in §60.672 of Subpart OOO, including reports of opacity observations made using Method 9 to demonstrate compliance with §60.672(b) [*condition 6.1.11.*], (c), and (f).
b. §60.7(a) - Any owner or operator subject to the provisions of this part [*40 CFR 60*] shall furnish written notification as follows:
§60.7(a) (4) - A notification of any physical or operational change to an existing facility which may increase the emission rate of any air pollutant to which a standard applies.
c. §60.7(b) - Any owner or operator subject to the provisions of this part [*40 CFR 60*] shall maintain records of the occurrence and duration of any startup, shutdown, or malfunction in the operation of an affected facility; any malfunction of the air pollution control equipment.
[45CSR13 - Permit No. R13-1660 §B.4.]
(Title V permit condition 6.5.1)

All notifications and reports required pursuant to 40 CFR 60 under §60.7 shall be forwarded to the WVDAQ and USEPA as outlined in permit condition 3.5.3.
[45CSR13 - Permit No. R13-1660 §B.8.]
(Title V permit condition 6.5.2)

Are you in compliance with all applicable requirements for this emission unit? Yes

If no, complete the **Schedule of Compliance Form** as **ATTACHMENT F.**

ATTACHMENT E

SOURCES FOR EMISSION POINT MS43

LIMESTONE CONVEYOR

(MTST-00-SAR-CNV-C)

ATTACHMENT E - Emission Unit Form

Emission Unit Description	*Limestone Transfer Conveyor*	
Emission unit ID number: MTST-00-SAR-CNV-C	**Emission unit name:** Source for emission point MS43	**List any control devices associated with this emission unit:** FE / DC#5 (*BH7cc*)

Provide a description of the emission unit (type, method of operation, design parameters, etc.)

36 inch Limestone Conveyor from Crusher #1 to Shuttle Conveyor MTST-00-SAR-CNV-1

Manufacturer:	**Model number:**	**Serial number:**
Montague	N/A	N/A
Construction date: 1994	**Installation date:** 1994	**Modification date(s):** N/A

Design Capacity (examples: furnaces - tons/hr, tanks - gallons):

400 TPH

Maximum Hourly Throughput:	**Maximum Annual Throughput:**	**Maximum Operating Schedule:**
400 TN	3,504,000 TN	8,760 HR/YR

Fuel Usage Data **(fill out all applicable fields)**

Does this emission unit combust fuel? ___Yes __X_ No	**If yes, is it?** ___ **Indirect Fired** ___**Direct Fired**
Maximum design heat input and/or maximum horsepower rating: N/A	**Type and Btu/hr rating of burners:** N/A

List the primary fuel type(s) and if applicable, the secondary fuel type(s). For each fuel type listed, provide the maximum hourly and annual fuel usage for each.

N/A

Describe each fuel expected to be used during the term of the permit.

Fuel Type	Max. Sulfur Content	Max. Ash Content	BTU Value
N/A	N/A	N/A	N/A

Emissions Data		
Criteria Pollutants	Potential Emissions	
	PPH	TPY
Carbon Monoxide (CO)	N/A	N/A
Nitrogen Oxides (NO_X)	N/A	N/A
Lead (Pb)	N/A	N/A
Particulate Matter ($PM_{2.5}$)	N/A	N/A
Particulate Matter (PM_{10})	2.65E-03	1.17E-03
Total Particulate Matter (TSP)	5.61E-03	2.48E-03
Sulfur Dioxide (SO_2)	N/A	N/A
Volatile Organic Compounds (VOC)	N/A	N/A
Hazardous Air Pollutants	Potential Emissions	
	PPH	TPY
	N/A	N/A
Regulated Pollutants other than Criteria and HAP	Potential Emissions	
	PPH	TPY
	N/A	N/A

List the method(s) used to calculate the potential emissions (include dates of any stack tests conducted, versions of software used, source and dates of emission factors, etc.).

See Emission Calculations in Attachment I

Applicable Requirements

List all applicable requirements for this emission unit. For each applicable requirement, include the underlying rule/regulation citation and/or construction permit with the condition number. (*Note: Title V permit condition numbers alone are not the underlying applicable requirements*). If an emission limit is calculated based on the type of source and design capacity or if a standard is based on a design parameter, this information should also be included.

In accordance with the information filed in Permit Application R13-1660C, and any amendments thereto, the following maximum throughputs shall not be exceeded, and, at a minimum, the following control equipment shall be installed, maintained, and operated so as to minimize particulate matter emissions:

Equipment ID No.	Description	Maximum Capacity		Control Equipment[1]	Associated Transfer Points		
		TPH	TPY		Location B- Before A- After	ID No.	Control Equipment[1]
Limestone Crushing Circuit							
2sa	Limestone Unloading Hoppers	440	354,000	PE, BH	B A	2ca n/a	PE, BH UG
3se	Sample Crusher Conveyer	440	354,000	FE, BH	B A	n/a 3ca	UG FE
3sg	Sample Crusher	7	261	FE, BH	B A	3ca 3cb	FE BH
4sa	Storage Pile Conveyer	440	354,000	FE	B A	3cb 5c	BH FE
5sa	Storage Pile (30,000 ton)	n/a	354,000	FE	B A	5c n/a	FE UG
6sd	Primary Crusher Conveyer	250	354,000	FE	B A	n/a 7cc	UG BH
n/a	Tramp Metal Magnet Building	250	354,000	FE	n/a	n/a	n/a
7sb	Primary Crusher	250	354,000	FE, BH	B A	7cc 7cc	BH BH
7sd	Shuttle Conveyer	250	354,000	FE	B A	7cc 8ce	BH BH
8sa	Limestone Storage Silo 1 (500 ton)	250	354,000	FE, BH	B	8ce	BH
8sb	Limestone Storage Silo 2 (500 ton)			FE, BH	B	8ce	BH
8sc	Limestone Storage Silo 3 (500 ton)			FE, BH	B	8ce	BH
8sd	Limestone Storage Silo 4 (500 ton)			FE, BH	B	8ce	BH

[1] BH - Baghouse, FE - Full Enclosure, PE - Partial Enclosure, UG - Underground Reclaim

[45CSR13 - Permit No. R13-1660 §A.1.]

(Title V permit condition 6.1.1)

Particulate matter (PM) emissions from the following emission points shall not exceed the specified limitations, and the units shall maintain the minimum collection efficiency:

Control Device ID NO.	Control Device Type	Emission Point ID No.	Maximum Emission Limit (lb/hour)[1]	Maximum Emission Limit (tons/year)	Maximum Emission Limit (gr/dscf)[2]	Maximum Collection Efficiency (%)
2ca	Baghouse	2e	<0.01	<0.01	0.022	99.80
3cb	Baghouse	3e	<0.01	<0.01	0.022	99.80
6cc	Baghouse	6e	<0.01	<0.01	0.022	99.80
7cc*	Baghouse	7e	<0.01	<0.01	0.022	99.80
8ce*	Baghouse	8e	<0.01	<0.01	0.022	99.80

[1] These limits are considered instantaneous limits and represent limits for Total Suspended Particulate and Particulate Matter less than 10 microns.

[2] Pursuant to 40.672(a)(1) and in grains/dry standard cubic feet

**Note – 7cc is listed as Dust Collector #5 and 8ce is listed as Dust Collector #7 in Section 1.0 Emission Table to coincide with plant labeling*

[45CSR13 - Permit No. R13-1660 §A.2., 45CSR16, 40 CFR §60.672(a)(1)]

(Title V permit condition 6.1.2)

The pertinent sections of 40 CFR 60 applicable to this facility include the following:
a. §§60.672(a), (b), & (f) - Particulate matter stack emissions from the Baghouse vents BH2ca, BH3cb, BH6cc, BH7cc and BH8ce shall not exceed 7 percent opacity. Any fugitive emissions from the equipment and transfer points identified in condition 6.1.1 shall not exceed 10 percent opacity
b. The opacity requirement set forth in 6.1.11.a. shall apply at all times except during periods of startup, shutdown, and malfunctions
[45CSR13 - Permit No. R13-1660 §B.4., 45CSR16, 40 CFR §60.11(c), 40 CFR §§ 60,672 (a), (b), & (f)]
(Title V permit condition 6.1.11)

At all times, including periods of startup, shutdown, and malfunction, any affected facility [*limestone equipment as defined in* conditions *6.1.1. and 6.1.2.*] including associated air pollution control equipment shall, to the extent practicable, be maintained and operated in a manner consistent with good air pollution control practice for minimizing emissions. Determination that acceptable operating and maintenance procedures are being used, will be based on information available to the Secretary which may include, but is not limited to, monitoring results, opacity observations, review of operating and maintenance procedures, and inspection of the source.
[45CSR16, 40 C.F.R. § 60.11(d)]
(Title V permit condition 6.1.12)

_X___ Permit Shield

For all applicable requirements listed above, provide monitoring/testing/recordkeeping/reporting which shall be used to demonstrate compliance. If the method is based on a permit or rule, include the condition number or citation. (Note: Each requirement listed above must have an associated method of demonstrating compliance. If there is not already a required method in place, then a method must be proposed.)

At such reasonable time(s) as the Director may designate, the permittee shall conduct or have conducted test(s) to determine compliance with the emission limitations as set forth in condition 6.1.2. Test(s) shall be conducted in accordance with condition 6.3.3. contained herein. The Director, or his duly authorized representative, may, at his option, witness or conduct such test. Should the Director exercise his option to conduct such test(s), the operator shall provide all the necessary sampling connections and sampling ports to be located in such manner as the Director may require, power for test equipment, and the required safety equipment such as scaffolding, railings, and ladders to comply with generally accepted good safety practices.
[45CSR13 - Permit No. R13-1660 §A.11.]
(Title V permit condition 6.3.1)

Each emissions unit with a visible emissions limit contained in this permit section (Section 6) shall be observed visually at least each calendar month during periods of normal facility operation for a sufficient time interval to determine if the unit has any visible emissions using 40 C.F.R. 60 Appendix A, Method 22. If visible emissions from any of the emissions units are observed during these monthly observations, or at any other time, that appear to exceed 50 percent of the allowable visible emission requirement for the emission unit, visible emissions evaluations in accordance with 40 C.F.R. 60 Appendix A, Method 9 shall be conducted as soon as practicable, but no later than one (1) month from the time of the observation. A Method 9 evaluation shall not be required if the visible emissions condition is corrected in a timely manner; the emissions unit is operating at normal operating conditions; and, the cause and corrective measures taken are recorded.
[45CSR13 - Permit No. R13-1660 §A.12.a)]
(Title V permit condition 6.3.2)

The pertinent sections of 40 CFR 60 applicable to this facility include the following:
a. §60.675(c)(1) - In determining compliance with the particulate matter standards in §60.672 (b) [condition *6.1.11*] and (c), the owner or operator shall use Method 9 and the procedures in §60.11, with the following additions:
1. §60.675(c)(1)(i) - The minimum distance between the observer and the emission source shall be 4.57 meters (15 feet).
2. §60.675(c)(1)(ii) - The observer shall, when possible, select a position that minimizes interference from other fugitive emission sources (e.g., road dust). The required observer position relative to the sun (Method 9, Section 2.1) must be followed.
b. §60.675(c)(3) - When determining compliance with the fugitive emissions standard for any affected facility described under §60.672(b) of 40 CFR Subpart OOO [*condition 6.1.11.*], the duration of the Method 9 observations may be reduced from 3 hours (thirty 6-minute averages) to 1 hour (ten 6-minute averages) only if the following conditions apply
1. §60.675(c)(3)(ii) - There are no individual readings greater than 10 percent opacity; and
2. §60.675(c)(3)(ii) - There are no more than 3 readings of 10 percent for the 1-hour period
c. §60.675(g) - If, after 30 days notice for an initially scheduled performance test, there is delay (due to operational problems, etc.) in conducting any rescheduled performance test required in this section, the owner or operator of an affected facility shall submit a notice to the Administrator at least 7 days prior to any rescheduled performance test.
[45CSR13 - Permit No. R13-1660 §B.4.]
(Title V permit condition 6.3.3)

With regard to any testing required by the Director, the permittee shall submit to the Director of Air Quality a test protocol detailing the proposed test methods, the date, and the time the proposed testing is to take place, as well as identifying the sampling locations and other relevant information. The test protocol must be received by the Director no less than thirty (30) days prior to the date the testing is to take place. Test results shall be submitted to the Director no more than sixty (60) days after the date the testing takes place.
[45CSR13 - Permit No. R13-1660 §B.6.]
(Title V permit condition 6.3.4)

A record of each visible emissions observation as required in permit condition 6.3.2. and/or 6.3.3. shall be maintained, including any data required by 40 C.F.R. 60 Appendix A, Method 22 or Method 9, whichever is appropriate. The record shall include, at a minimum, the date, time, name of the emission unit, the applicable visible emissions requirement, the results of the observation, and the name of the observer.
[45CSR13 - Permit No. R13-1660 §A.12.b)]
(Title V permit condition 6.4.1)

The pertinent sections of 40 CFR 60 applicable to this facility include the following:
a. §60.676(f) - The owner or operator of any affected facility shall submit written reports of the results of all performance tests conducted to demonstrate compliance with the standards set forth in §60.672 of Subpart OOO, including reports of opacity observations made using Method 9 to demonstrate compliance with §60.672(b) [*condition 6.1.11.*], (c), and (f).
b. §60.7(a) - Any owner or operator subject to the provisions of this part [*40 CFR 60*] shall furnish written notification as follows:
§60.7(a) (4) - A notification of any physical or operational change to an existing facility which may increase the emission rate of any air pollutant to which a standard applies.
c. §60.7(b) - Any owner or operator subject to the provisions of this part [*40 CFR 60*] shall maintain records of the occurrence and duration of any startup, shutdown, or malfunction in the operation of an affected facility; any malfunction of the air pollution control equipment.
[45CSR13 - Permit No. R13-1660 §B.4.]
(Title V permit condition 6.5.1)

All notifications and reports required pursuant to 40 CFR 60 under §60.7 shall be forwarded to the WVDAQ and USEPA as outlined in permit condition 3.5.3.
[45CSR13 - Permit No. R13-1660 §B.8.]
(Title V permit condition 6.5.2)

Are you in compliance with all applicable requirements for this emission unit? Yes

If no, complete the **Schedule of Compliance Form** as **ATTACHMENT F**.

ATTACHMENT E

SOURCES FOR EMISSION POINT MS44

LIMESTONE SHUTTLE CONVEYOR

(MTST-00-SAR-CNV-1 (7sd))

ATTACHMENT E - Emission Unit Form

Emission Unit Description	*Limestone Shuttle Conveyor*	
Emission unit ID number: MTST-00-SAR-CNV-1 (7sd)	**Emission unit name:** Source for emission point MS44	**List any control devices associated with this emission unit:** FE / DC#7 (*BH8ce*)
Provide a description of the emission unit (type, method of operation, design parameters, etc.) Limestone Shuttle Conveyor (7sd) to Silo's MTST-03-SAR-TK-1A & 1B and MTST-00-SAR-TK-1A & 1B		
Manufacturer: Montague	**Model number:** N/A	**Serial number:** N/A
Construction date: 1994	**Installation date:** 1994	**Modification date(s):** 2001
Design Capacity (examples: furnaces - tons/hr, tanks - gallons): 400 TPH		
Maximum Hourly Throughput: 400 TN	**Maximum Annual Throughput:** 3,504,000 TN	**Maximum Operating Schedule:** 8,760 HR/YR
***Fuel Usage Data* (fill out all applicable fields)**		
Does this emission unit combust fuel? ___Yes __X_ No		**If yes, is it?** **___ Indirect Fired ___Direct Fired**
Maximum design heat input and/or maximum horsepower rating: N/A		**Type and Btu/hr rating of burners:** N/A
List the primary fuel type(s) and if applicable, the secondary fuel type(s). For each fuel type listed, provide the maximum hourly and annual fuel usage for each. N/A		

Describe each fuel expected to be used during the term of the permit.

Fuel Type	Max. Sulfur Content	Max. Ash Content	BTU Value
N/A	N/A	N/A	N/A

Emissions Data		
Criteria Pollutants	Potential Emissions	
	PPH	TPY
Carbon Monoxide (CO)	N/A	N/A
Nitrogen Oxides (NO_X)	N/A	N/A
Lead (Pb)	N/A	N/A
Particulate Matter ($PM_{2.5}$)	N/A	N/A
Particulate Matter (PM_{10})	3.68E-03	1.63E-03
Total Particulate Matter (TSP)	7.78E-03	3.44E-03
Sulfur Dioxide (SO_2)	N/A	N/A
Volatile Organic Compounds (VOC)	N/A	N/A
Hazardous Air Pollutants	Potential Emissions	
	PPH	TPY
	N/A	N/A
Regulated Pollutants other than Criteria and HAP	Potential Emissions	
	PPH	TPY
	N/A	N/A

List the method(s) used to calculate the potential emissions (include dates of any stack tests conducted, versions of software used, source and dates of emission factors, etc.).

See Emission Calculations in Attachment I

Applicable Requirements

List all applicable requirements for this emission unit. For each applicable requirement, include the underlying rule/regulation citation and/or construction permit with the condition number. (*Note: Title V permit condition numbers alone are not the underlying applicable requirements*). If an emission limit is calculated based on the type of source and design capacity or if a standard is based on a design parameter, this information should also be included.

In accordance with the information filed in Permit Application R13-1660C, and any amendments thereto, the following maximum throughputs shall not be exceeded, and, at a minimum, the following control equipment shall be installed, maintained, and operated so as to minimize particulate matter emissions:

Equipment ID No.	Description	Maximum Capacity		Control Equipment[1]	Associated Transfer Points		
		TPH	TPY		Location B- Before A- After	ID No.	Control Equipment[1]
Limestone Crushing Circuit							
2sa	Limestone Unloading Hoppers	440	354,000	PE, BH	B A	2ca n/a	PE, BH UG
3se	Sample Crusher Conveyer	440	354,000	FE, BH	B A	n/a 3ca	UG FE
3sg	Sample Crusher	7	261	FE, BH	B A	3ca 3cb	FE BH
4sa	Storage Pile Conveyer	440	354,000	FE	B A	3cb 5c	BH FE
5sa	Storage Pile (30,000 ton)	n/a	354,000	FE	B A	5c n/a	FE UG
6sd	Primary Crusher Conveyer	250	354,000	FE	B A	n/a 7cc	UG BH
n/a	Tramp Metal Magnet Building	250	354,000	FE	n/a	n/a	n/a
7sb	Primary Crusher	250	354,000	FE, BH	B A	7cc 7cc	BH BH
7sd	Shuttle Conveyer	250	354,000	FE	B A	7cc 8ce	BH BH
8sa	Limestone Storage Silo 1 (500 ton)	250	354,000	FE, BH	B	8ce	BH
8sb	Limestone Storage Silo 2 (500 ton)			FE, BH	B	8ce	BH
8sc	Limestone Storage Silo 3 (500 ton)			FE, BH	B	8ce	BH
8sd	Limestone Storage Silo 4 (500 ton)			FE, BH	B	8ce	BH

[1] BH - Baghouse, FE - Full Enclosure, PE - Partial Enclosure, UG - Underground Reclaim

[45CSR13 - Permit No. R13-1660 §A.1.]

(Title V permit condition 6.1.1)

Particulate matter (PM) emissions from the following emission points shall not exceed the specified limitations, and the units shall maintain the minimum collection efficiency:

Control Device ID NO.	Control Device Type	Emission Point ID No.	Maximum Emission Limit (lb/hour)[1]	Maximum Emission Limit (tons/year)	Maximum Emission Limit (gr/dscf)[2]	Maximum Collection Efficiency (%)
2ca	Baghouse	2e	<0.01	<0.01	0.022	99.80
3cb	Baghouse	3e	<0.01	<0.01	0.022	99.80
6cc	Baghouse	6e	<0.01	<0.01	0.022	99.80
7cc*	Baghouse	7e	<0.01	<0.01	0.022	99.80
8ce*	Baghouse	8e	<0.01	<0.01	0.022	99.80

[1] These limits are considered instantaneous limits and represent limits for Total Suspended Particulate and Particulate Matter less than 10 microns.

[2] Pursuant to 40.672(a)(1) and in grains/dry standard cubic feet

**Note – 7cc is listed as Dust Collector #5 and 8ce is listed as Dust Collector #7 in Section 1.0 Emission Table to coincide with plant labeling*

[45CSR13 - Permit No. R13-1660 §A.2., 45CSR16, 40 CFR §60.672(a)(1)]

(Title V permit condition 6.1.2)

The pertinent sections of 40 CFR 60 applicable to this facility include the following:
a. §§60.672(a), (b), & (f) - Particulate matter stack emissions from the Baghouse vents BH2ca, BH3cb, BH6cc, BH7cc and BH8ce shall not exceed 7 percent opacity. Any fugitive emissions from the equipment and transfer points identified in condition 6.1.1 shall not exceed 10 percent opacity
b. The opacity requirement set forth in 6.1.11.a. shall apply at all times except during periods of startup, shutdown, and malfunctions

[45CSR13 - Permit No. R13-1660 §B.4., 45CSR16, 40 CFR §60.11(c), 40 CFR §§ 60,672 (a), (b), & (f)]
(Title V permit condition 6.1.11)

At all times, including periods of startup, shutdown, and malfunction, any affected facility·[*limestone equipment as defined in* conditions *6.1.1. and 6.1.2.*] including associated air pollution control equipment shall, to the extent practicable, be maintained and operated in a manner consistent with good air pollution control practice for minimizing emissions. Determination that acceptable operating and maintenance procedures are being used, will be based on information available to the Secretary which may include, but is not limited to, monitoring results, opacity observations, review of operating and maintenance procedures, and inspection of the source.

[45CSR16, 40 C.F.R. § 60.11(d)]
(Title V permit condition 6.1.12)

__X__ Permit Shield

For all applicable requirements listed above, provide monitoring/testing/recordkeeping/reporting which shall be used to demonstrate compliance. If the method is based on a permit or rule, include the condition number or citation. (Note: Each requirement listed above must have an associated method of demonstrating compliance. If there is not already a required method in place, then a method must be proposed.)

At such reasonable time(s) as the Director may designate, the permittee shall conduct or have conducted test(s) to determine compliance with the emission limitations as set forth in condition 6.1.2. Test(s) shall be conducted in accordance with condition 6.3.3. contained herein. The Director, or his duly authorized representative, may, at his option, witness or conduct such test. Should the Director exercise his option to conduct such test(s), the operator shall provide all the necessary sampling connections and sampling ports to be located in such manner as the Director may require, power for test equipment, and the required safety equipment such as scaffolding, railings, and ladders to comply with generally accepted good safety practices.
[45CSR13 - Permit No. R13-1660 §A.11.]
(Title V permit condition 6.3.1)

Each emissions unit with a visible emissions limit contained in this permit section (Section 6) shall be observed visually at least each calendar month during periods of normal facility operation for a sufficient time interval to determine if the unit has any visible emissions using 40 C.F.R. 60 Appendix A, Method 22. If visible emissions from any of the emissions units are observed during these monthly observations, or at any other time, that appear to exceed 50 percent of the allowable visible emission requirement for the emission unit, visible emissions evaluations in accordance with 40 C.F.R. 60 Appendix A, Method 9 shall be conducted as soon as practicable, but no later than one (1) month from the time of the observation. A Method 9 evaluation shall not be required if the visible emissions condition is corrected in a timely manner; the emissions unit is operating at normal operating conditions; and, the cause and corrective measures taken are recorded.
[45CSR13 - Permit No. R13-1660 §A.12.a)]
(Title V permit condition 6.3.2)

The pertinent sections of 40 CFR 60 applicable to this facility include the following:
a. §60.675(c)(1) - In determining compliance with the particulate matter standards in §60.672 (b) [condition *6.1.11*] and (c), the owner or operator shall use Method 9 and the procedures in §60.11, with the following additions:
1. §60.675(c)(1)(i) - The minimum distance between the observer and the emission source shall be 4.57 meters (15 feet).
2. §60.675(c)(1)(ii) - The observer shall, when possible, select a position that minimizes interference from other fugitive emission sources (e.g., road dust). The required observer position relative to the sun (Method 9, Section 2.1) must be followed.
b. §60.675(c)(3) - When determining compliance with the fugitive emissions standard for any affected facility described under §60.672(b) of 40 CFR Subpart OOO [*condition 6.1.11.*], the duration of the Method 9 observations may be reduced from 3 hours (thirty 6-minute averages) to 1 hour (ten 6-minute averages) only if the following conditions apply
1. §60.675(c)(3)(ii) - There are no individual readings greater than 10 percent opacity; and
2. §60.675(c)(3)(ii) - There are no more than 3 readings of 10 percent for the 1-hour period
c. §60.675(g) - If, after 30 days notice for an initially scheduled performance test, there is delay (due to operational problems, etc.) in conducting any rescheduled performance test required in this section, the owner or operator of an affected facility shall submit a notice to the Administrator at least 7 days prior to any rescheduled performance test.
[45CSR13 - Permit No. R13-1660 §B.4.]
(Title V permit condition 6.3.3)

With regard to any testing required by the Director, the permittee shall submit to the Director of Air Quality a test protocol detailing the proposed test methods, the date, and the time the proposed testing is to take place, as well as identifying the sampling locations and other relevant information. The test protocol must be received by the Director no less than thirty (30) days prior to the date the testing is to take place. Test results shall be submitted to the Director no more than sixty (60) days after the date the testing takes place.
[45CSR13 - Permit No. R13-1660 §B.6.]
(Title V permit condition 6.3.4)

A record of each visible emissions observation as required in permit condition 6.3.2. and/or 6.3.3. shall be maintained, including any data required by 40 C.F.R. 60 Appendix A, Method 22 or Method 9, whichever is appropriate. The record shall include, at a minimum, the date, time, name of the emission unit, the applicable visible emissions requirement, the results of the observation, and the name of the observer.
[45CSR13 - Permit No. R13-1660 §A.12.b)]
(Title V permit condition 6.4.1)

The pertinent sections of 40 CFR 60 applicable to this facility include the following:
a. §60.676(f) - The owner or operator of any affected facility shall submit written reports of the results of all performance tests conducted to demonstrate compliance with the standards set forth in §60.672 of Subpart OOO, including reports of opacity observations made using Method 9 to demonstrate compliance with §60.672(b) [*condition 6.1.11.*], (c), and (f).
b. §60.7(a) - Any owner or operator subject to the provisions of this part [*40 CFR 60*] shall furnish written notification as follows:
§60.7(a) (4) - A notification of any physical or operational change to an existing facility which may increase the emission rate of any air pollutant to which a standard applies.
c. §60.7(b) - Any owner or operator subject to the provisions of this part [*40 CFR 60*] shall maintain records of the occurrence and duration of any startup, shutdown, or malfunction in the operation of an affected facility; any malfunction of the air pollution control equipment.
[45CSR13 - Permit No. R13-1660 §B.4.]
(Title V permit condition 6.5.1)

All notifications and reports required pursuant to 40 CFR 60 under §60.7 shall be forwarded to the WVDAQ and USEPA as outlined in permit condition 3.5.3.
[45CSR13 - Permit No. R13-1660 §B.8.]
(Title V permit condition 6.5.2)

Are you in compliance with all applicable requirements for this emission unit? Yes

If no, complete the **Schedule of Compliance Form** as **ATTACHMENT F.**

ATTACHMENT E

SOURCES FOR EMISSION POINT MS45

LIMESTONE SHUTTLE CONVEYOR

(MTST-03-SAR-TK-1A (8sa), MTST-03-SAR-TK-1B (8sb), MTST-00-SAR-TK-1A (8sc), MTST-00-SAR-TK-1B (8sd), MTST-03-SAP-FDR-1A, MTST-03-SAP-FDR-1B, MTST-00-SAP-FDR-1A, MTST-00-SAP-FDR-1B)

ATTACHMENT E - Emission Unit Form

Emission Unit Description	*Scrubber Limestone Preparation*	
Emission unit ID number: MTST-03-SAR-TK-1A (8sa) MTST-03-SAR-TK-1B (8sb) MTST-00-SAR-TK-1A (8sc) MTST-00-SAR-TK-1B (8sd) MTST-03-SAP-FDR-1A MTST-03-SAP-FDR-1B MTST-00-SAP-FDR-1A MTST-00-SAP-FDR-1B	**Emission unit name:** Sources for emission point MS45	**List any control devices associated with this emission unit:** MTST-03-SAR-TK-1A - FE / DC#7 *(BH8ce)* MTST-03-SAR-TK-1B - FE / DC#7 *(BH8ce)* MTST-00-SAR-TK-1A - FE / DC#7 *(BH8ce)* MTST-00-SAR-TK-1B - FE / DC#7 *(BH8ce)* MTST-03-SAP-FDR-1A - FE / DC#7 *(BH8ce)* MTST-03-SAP-FDR-1B - FE / DC#7 *(BH8ce)* MTST-00-SAP-FDR-1A- FE / DC#7 *(BH8ce)* MTST-00-SAP-FDR-1B - FE / DC#7 *(BH8ce)*

Provide a description of the emission unit (type, method of operation, design parameters, etc.):

Transfer of limestone from 500 ton steel limestone storage silos (8sa, 8sb, 8sc & 8sd) to ball mill weigh feeders.

Manufacturer:	**Model number:**	**Serial number:**
MTST-03-SAR-TK-1A (8sa) Allis Mineral Systems	MTST-03-SAR-TK-1A (8sa) N/A	MTST-03-SAR-TK-1A (8sa) – N/A
MTST-03-SAR-TK-1B (8sb) Allis Mineral Systems	MTST-03-SAR-TK-1B (8sb) N/A	MTST-03-SAR-TK-1B (8sb) – N/A
MTST-00-SAR-TK-1A (8sc) RECO	MTST-00-SAR-TK-1A (8sc) N/A	MTST-00-SAR-TK-1A (8sc) – N/A
MTST-00-SAR-TK-1B (8sd) RECO	MTST-00-SAR-TK-1B (8sd) N/A	MTST-00-SAR-TK-1B (8sd) – N/A
MTST-03-SAP-FDR-1A - Ramsey Technology	MTST-03-SAP-FDR-1A – 10-301	MTST-03-SAP-FDR-1A– N/A
MTST-03-SAP-FDR-1B - Ramsey Technology	MTST-03-SAP-FDR-1B – 10-301	MTST-03-SAP-FDR-1B – N/A
MTST-00-SAP-FDR-1A- Ramsey Technology	MTST-00-SAP-FDR-1A – 10-20-1	MTST-00-SAP-FDR-1A– N/A
MTST-00-SAP-FDR-1B- Ramsey Technology	MTST-00-SAP-FDR-1B – 10-20-1	MTST-00-SAP-FDR-1B – N/A

Construction date:	**Installation date:**	**Modification date(s):**
MTST-03-SAR-TK-1A (8sa) 1994	MTST-03-SAR-TK-1A (8sa) 1994	MTST-03-SAR-TK-1A (8sa) – N/A
MTST-03-SAR-TK-1B (8sb) 1994	MTST-03-SAR-TK-1B (8sb) 1994	MTST-03-SAR-TK-1B (8sb) – N/A
MTST-00-SAR-TK-1A (8sc) 2001	MTST-00-SAR-TK-1A (8sc) 2001	MTST-00-SAR-TK-1A (8sc) – N/A
MTST-00-SAR-TK-1B (8sd) 2001	MTST-00-SAR-TK-1B (8sd) 2001	MTST-00-SAR-TK-1B (8sd) – N/A
MTST-03-SAP-FDR-1A 1994	MTST-03-SAP-FDR-1A 1994	MTST-03-SAP-FDR-1A– N/A
MTST-03-SAP-FDR-1B 1994	MTST-03-SAP-FDR-1B 1994	MTST-03-SAP-FDR-1B – N/A
MTST-00-SAP-FDR-1A 2001	MTST-00-SAP-FDR-1A 2001	MTST-00-SAP-FDR-1A– N/A
MTST-00-SAP-FDR-1B 2001	MTST-00-SAP-FDR-1B 2001	MTST-00-SAP-FDR-1B – N/A

Design Capacity (examples: furnaces - tons/hr, tanks - gallons):

MTST-03-SAR-TK-1A (8sa) 500 Tons

MTST-03-SAR-TK-1B (8sb) 500 Tons

MTST-00-SAR-TK-1A (8sc) 500 Tons

MTST-00-SAR-TK-1B (8sd) 500 Tons

MTST-03-SAP-FDR-1A 18 TPH

MTST-03-SAP-FDR-1B 18 TPH

MTST-00-SAP-FDR-1A 17 TPH

MTST-00-SAP-FDR-1B 17 TPH

Maximum Hourly Throughput:	Maximum Annual Throughput:	Maximum Operating Schedule:
MTST-03-SAR-TK-1A (8sa) 18 TN	MTST-03-SAR-TK-1A (8sa) 157,680 TN	MTST-03-SAR-TK-1A (8sa) 8760 HR/YR
MTST-03-SAR-TK-1B (8sb) 18 TN	MTST-03-SAR-TK-1B (8sb) 157,680 TN	MTST-03-SAR-TK-1B (8sb) 8760 HR/YR
MTST-00-SAR-TK-1A (8sc) 17 TN	MTST-00-SAR-TK-1A (8sc) 148,920 TN	MTST-00-SAR-TK-1A (8sc) 8760 HR/YR
MTST-00-SAR-TK-1B (8sd) 17 TN	MTST-00-SAR-TK-1B (8sd) 148,920 TN	MTST-00-SAR-TK-1B (8sd) 8760 HR/YR
MTST-03-SAP-FDR-1A 18 TN	MTST-03-SAP-FDR-1A 157,680 TN	MTST-03-SAP-FDR-1A 8760 HR/YR
MTST-03-SAP-FDR-1B 18 TN	MTST-03-SAP-FDR-1B 157,680 TN	MTST-03-SAP-FDR-1B 8760 HR/YR
MTST-00-SAP-FDR-1A 17 TN	MTST-00-SAP-FDR-1A 148,920 TN	MTST-00-SAP-FDR-1A 8760 HR/YR
MTST-00-SAP-FDR-1B 17 TN	MTST-00-SAP-FDR-1B 148,920 TN	MTST-00-SAP-FDR-1B 8760 HR/YR

Fuel Usage Data **(fill out all applicable fields)**

Does this emission unit combust fuel? ___Yes __X_ No	**If yes, is it?** **___ Indirect Fired ___Direct Fired**
Maximum design heat input and/or maximum horsepower rating: N/A	**Type and Btu/hr rating of burners:** N/A

List the primary fuel type(s) and if applicable, the secondary fuel type(s). For each fuel type listed, provide the maximum hourly and annual fuel usage for each.
N/A

Describe each fuel expected to be used during the term of the permit.

Fuel Type	Max. Sulfur Content	Max. Ash Content	BTU Value
N/A	N/A	N/A	N/A

Emissions Data		
Criteria Pollutants	Potential Emissions	
	PPH	TPY
Carbon Monoxide (CO)	N/A	N/A
Nitrogen Oxides (NO_X)	N/A	N/A
Lead (Pb)	N/A	N/A
Particulate Matter ($PM_{2.5}$)	N/A	N/A
Particulate Matter (PM_{10})	N/A	N/A
Total Particulate Matter (TSP)	N/A	N/A
Sulfur Dioxide (SO_2)	N/A	N/A
Volatile Organic Compounds (VOC)	N/A	N/A
Hazardous Air Pollutants	Potential Emissions	
	PPH	TPY
	N/A	N/A
Regulated Pollutants other than Criteria and HAP	Potential Emissions	
	PPH	TPY
	N/A	N/A

List the method(s) used to calculate the potential emissions (include dates of any stack tests conducted, versions of software used, source and dates of emission factors, etc.).

See Emission Calculations in Attachment I

All emissions from the ash silos will occur in mixers, therefore, throughput for this emission unit is set to zero.

Applicable Requirements

List all applicable requirements for this emission unit. For each applicable requirement, include the underlying rule/regulation citation and/or construction permit with the condition number. (*Note: Title V permit condition numbers alone are not the underlying applicable requirements*). If an emission limit is calculated based on the type of source and design capacity or if a standard is based on a design parameter, this information should also be included.

In accordance with the information filed in Permit Application R13-1660C, and any amendments thereto, the following maximum throughputs shall not be exceeded, and, at a minimum, the following control equipment shall be installed, maintained, and operated so as to minimize particulate matter emissions:

Equipment ID No.	Description	Maximum Capacity		Control Equipment[1]	Associated Transfer Points		
		TPH	TPY		Location B- Before A- After	ID No.	Control Equipment[1]
Limestone Crushing Circuit							
2sa	Limestone Unloading Hoppers	440	354,000	PE, BH	B A	2ca n/a	PE, BH UG
3se	Sample Crusher Conveyer	440	354,000	FE, BH	B A	n/a 3ca	UG FE
3sg	Sample Crusher	7	261	FE, BH	B A	3ca 3cb	FE BH
4sa	Storage Pile Conveyer	440	354,000	FE	B A	3cb 5c	BH FE
5sa	Storage Pile (30,000 ton)	n/a	354,000	FE	B A	5c n/a	FE UG
6sd	Primary Crusher Conveyer	250	354,000	FE	B A	n/a 7cc	UG BH
n/a	Tramp Metal Magnet Building	250	354,000	FE	n/a	n/a	n/a
7sb	Primary Crusher	250	354,000	FE, BH	B A	7cc 7cc	BH BH
7sd	Shuttle Conveyer	250	354,000	FE	B A	7cc 8ce	BH BH
8sa	Limestone Storage Silo 1 (500 ton)	250	354,000	FE, BH	B	8ce	BH
8sb	Limestone Storage Silo 2 (500 ton)			FE, BH	B	8ce	BH
8sc	Limestone Storage Silo 3 (500 ton)			FE, BH	B	8ce	BH
8sd	Limestone Storage Silo 4 (500 ton)			FE, BH	B	8ce	BH

[1] BH - Baghouse, FE - Full Enclosure, PE - Partial Enclosure, UG - Underground Reclaim

[45CSR13 - Permit No. R13-1660 §A.1.]

(Title V permit condition 6.1.1)

Particulate matter (PM) emissions from the following emission points shall not exceed the specified limitations, and the units shall maintain the minimum collection efficiency:

Control Device ID NO.	Control Device Type	Emission Point ID No.	Maximum Emission Limit (lb/hour)[1]	Maximum Emission Limit (tons/year)	Maximum Emission Limit (gr/dscf)[2]	Maximum Collection Efficiency (%)
2ca	Baghouse	2e	<0.01	<0.01	0.022	99.80
3cb	Baghouse	3e	<0.01	<0.01	0.022	99.80
6cc	Baghouse	6e	<0.01	<0.01	0.022	99.80
7cc*	Baghouse	7e	<0.01	<0.01	0.022	99.80
8ce*	Baghouse	8e	<0.01	<0.01	0.022	99.80

[1] These limits are considered instantaneous limits and represent limits for Total Suspended Particulate and Particulate Matter less than 10 microns.

[2] Pursuant to 40.672(a)(1) and in grains/dry standard cubic feet

**Note – 7cc is listed as Dust Collector #5 and 8ce is listed as Dust Collector #7 in Section 1.0 Emission Table to coincide with plant labeling*

[45CSR13 - Permit No. R13-1660 §A.2., 45CSR16, 40 CFR §60.672(a)(1)]

(Title V permit condition 6.1.2)

The pertinent sections of 40 CFR 60 applicable to this facility include the following:
a. §§60.672(a), (b), & (f) - Particulate matter stack emissions from the Baghouse vents BH2ca, BH3cb, BH6cc, BH7cc and BH8ce shall not exceed 7 percent opacity. Any fugitive emissions from the equipment and transfer points identified in condition 6.1.1 shall not exceed 10 percent opacity
b. The opacity requirement set forth in 6.1.11.a. shall apply at all times except during periods of startup, shutdown, and malfunctions

[45CSR13 - Permit No. R13-1660 §B.4., 45CSR16, 40 CFR §60.11(c), 40 CFR §§ 60,672 (a), (b), & (f)]
(Title V permit condition 6.1.11)

At all times, including periods of startup, shutdown, and malfunction, any affected facility [*limestone equipment as defined in* conditions *6.1.1. and 6.1.2.*] including associated air pollution control equipment shall, to the extent practicable, be maintained and operated in a manner consistent with good air pollution control practice for minimizing emissions. Determination that acceptable operating and maintenance procedures are being used, will be based on information available to the Secretary which may include, but is not limited to, monitoring results, opacity observations, review of operating and maintenance procedures, and inspection of the source.

[45CSR16, 40 C.F.R. § 60.11(d)]
(Title V permit condition 6.1.12)

__X__ Permit Shield

For all applicable requirements listed above, provide monitoring/testing/recordkeeping/reporting which shall be used to demonstrate compliance. If the method is based on a permit or rule, include the condition number or citation. (Note: Each requirement listed above must have an associated method of demonstrating compliance. If there is not already a required method in place, then a method must be proposed.)

At such reasonable time(s) as the Director may designate, the permittee shall conduct or have conducted test(s) to determine compliance with the emission limitations as set forth in condition 6.1.2. Test(s) shall be conducted in accordance with condition 6.3.3. contained herein. The Director, or his duly authorized representative, may, at his option, witness or conduct such test. Should the Director exercise his option to conduct such test(s), the operator shall provide all the necessary sampling connections and sampling ports to be located in such manner as the Director may require, power for test equipment, and the required safety equipment such as scaffolding, railings, and ladders to comply with generally accepted good safety practices.
[45CSR13 - Permit No. R13-1660 §A.11.]
(Title V permit condition 6.3.1)

Each emissions unit with a visible emissions limit contained in this permit section (Section 6) shall be observed visually at least each calendar month during periods of normal facility operation for a sufficient time interval to determine if the unit has any visible emissions using 40 C.F.R. 60 Appendix A, Method 22. If visible emissions from any of the emissions units are observed during these monthly observations, or at any other time, that appear to exceed 50 percent of the allowable visible emission requirement for the emission unit, visible emissions evaluations in accordance with 40 C.F.R. 60 Appendix A, Method 9 shall be conducted as soon as practicable, but no later than one (1) month from the time of the observation. A Method 9 evaluation shall not be required if the visible emissions condition is corrected in a timely manner; the emissions unit is operating at normal operating conditions; and, the cause and corrective measures taken are recorded.
[45CSR13 - Permit No. R13-1660 §A.12.a)]
(Title V permit condition 6.3.2)

The pertinent sections of 40 CFR 60 applicable to this facility include the following:
a. §60.675(c)(1) - In determining compliance with the particulate matter standards in §60.672 (b) [condition *6.1.11*] and (c), the owner or operator shall use Method 9 and the procedures in §60.11, with the following additions:
1. §60.675(c)(1)(i) - The minimum distance between the observer and the emission source shall be 4.57 meters (15 feet).
2. §60.675(c)(1)(ii) - The observer shall, when possible, select a position that minimizes interference from other fugitive emission sources (e.g., road dust). The required observer position relative to the sun (Method 9, Section 2.1) must be followed.
b. §60.675(c)(3) - When determining compliance with the fugitive emissions standard for any affected facility described under §60.672(b) of 40 CFR Subpart OOO [*condition 6.1.11.*], the duration of the Method 9 observations may be reduced from 3 hours (thirty 6-minute averages) to 1 hour (ten 6-minute averages) only if the following conditions apply
1. §60.675(c)(3)(ii) - There are no individual readings greater than 10 percent opacity; and
2. §60.675(c)(3)(ii) - There are no more than 3 readings of 10 percent for the 1-hour period
c. §60.675(g) - If, after 30 days notice for an initially scheduled performance test, there is delay (due to operational problems, etc.) in conducting any rescheduled performance test required in this section, the owner or operator of an affected facility shall submit a notice to the Administrator at least 7 days prior to any rescheduled performance test.
[45CSR13 - Permit No. R13-1660 §B.4.]
(Title V permit condition 6.3.3)

With regard to any testing required by the Director, the permittee shall submit to the Director of Air Quality a test protocol detailing the proposed test methods, the date, and the time the proposed testing is to take place, as well as identifying the sampling locations and other relevant information. The test protocol must be received by the Director no less than thirty (30) days prior to the date the testing is to take place. Test results shall be submitted to the Director no more than sixty (60) days after the date the testing takes place.
[45CSR13 - Permit No. R13-1660 §B.6.]
(Title V permit condition 6.3.4)

For all applicable requirements listed above, provide monitoring/testing/recordkeeping/reporting which shall be used to demonstrate compliance. If the method is based on a permit or rule, include the condition number or citation. (Note: Each requirement listed above must have an associated method of demonstrating compliance. If there is not already a required method in place, then a method must be proposed.)

At such reasonable time(s) as the Director may designate, the permittee shall conduct or have conducted test(s) to determine compliance with the emission limitations as set forth in condition 6.1.2. Test(s) shall be conducted in accordance with condition 6.3.3. contained herein. The Director, or his duly authorized representative, may, at his option, witness or conduct such test. Should the Director exercise his option to conduct such test(s), the operator shall provide all the necessary sampling connections and sampling ports to be located in such manner as the Director may require, power for test equipment, and the required safety equipment such as scaffolding, railings, and ladders to comply with generally accepted good safety practices.
[45CSR13 - Permit No. R13-1660 §A.11.]
(Title V permit condition 6.3.1)

Each emissions unit with a visible emissions limit contained in this permit section (Section 6) shall be observed visually at least each calendar month during periods of normal facility operation for a sufficient time interval to determine if the unit has any visible emissions using 40 C.F.R. 60 Appendix A, Method 22. If visible emissions from any of the emissions units are observed during these monthly observations, or at any other time, that appear to exceed 50 percent of the allowable visible emission requirement for the emission unit, visible emissions evaluations in accordance with 40 C.F.R. 60 Appendix A, Method 9 shall be conducted as soon as practicable, but no later than one (1) month from the time of the observation. A Method 9 evaluation shall not be required if the visible emissions condition is corrected in a timely manner; the emissions unit is operating at normal operating conditions; and, the cause and corrective measures taken are recorded.
[45CSR13 - Permit No. R13-1660 §A.12.a)]
(Title V permit condition 6.3.2)

The pertinent sections of 40 CFR 60 applicable to this facility include the following:
a. §60.675(c)(1) - In determining compliance with the particulate matter standards in §60.672 (b) [condition *6.1.11*] and (c), the owner or operator shall use Method 9 and the procedures in §60.11, with the following additions:
1. §60.675(c)(1)(i) - The minimum distance between the observer and the emission source shall be 4.57 meters (15 feet).
2. §60.675(c)(1)(ii) - The observer shall, when possible, select a position that minimizes interference from other fugitive emission sources (e.g., road dust). The required observer position relative to the sun (Method 9, Section 2.1) must be followed.
b. §60.675(c)(3) - When determining compliance with the fugitive emissions standard for any affected facility described under §60.672(b) of 40 CFR Subpart OOO [*condition 6.1.11.*], the duration of the Method 9 observations may be reduced from 3 hours (thirty 6-minute averages) to 1 hour (ten 6-minute averages) only if the following conditions apply
1. §60.675(c)(3)(ii) - There are no individual readings greater than 10 percent opacity; and
2. §60.675(c)(3)(ii) - There are no more than 3 readings of 10 percent for the 1-hour period
c. §60.675(g) - If, after 30 days notice for an initially scheduled performance test, there is delay (due to operational problems, etc.) in conducting any rescheduled performance test required in this section, the owner or operator of an affected facility shall submit a notice to the Administrator at least 7 days prior to any rescheduled performance test.
[45CSR13 - Permit No. R13-1660 §B.4.]
(Title V permit condition 6.3.3)

With regard to any testing required by the Director, the permittee shall submit to the Director of Air Quality a test protocol detailing the proposed test methods, the date, and the time the proposed testing is to take place, as well as identifying the sampling locations and other relevant information. The test protocol must be received by the Director no less than thirty (30) days prior to the date the testing is to take place. Test results shall be submitted to the Director no more than sixty (60) days after the date the testing takes place.
[45CSR13 - Permit No. R13-1660 §B.6.]
(Title V permit condition 6.3.4)

A record of each visible emissions observation as required in permit condition 6.3.2. and/or 6.3.3. shall be maintained, including any data required by 40 C.F.R. 60 Appendix A, Method 22 or Method 9, whichever is appropriate. The record shall include, at a minimum, the date, time, name of the emission unit, the applicable visible emissions requirement, the results of the observation, and the name of the observer.
[45CSR13 - Permit No. R13-1660 §A.12.b)]
(Title V permit condition 6.4.1)

The pertinent sections of 40 CFR 60 applicable to this facility include the following:
a. §60.676(f) - The owner or operator of any affected facility shall submit written reports of the results of all performance tests conducted to demonstrate compliance with the standards set forth in §60.672 of Subpart OOO, including reports of opacity observations made using Method 9 to demonstrate compliance with §60.672(b) [*condition 6.1.11.*], (c), and (f).
b. §60.7(a) - Any owner or operator subject to the provisions of this part [*40 CFR 60*] shall furnish written notification as follows:
§60.7(a) (4) - A notification of any physical or operational change to an existing facility which may increase the emission rate of any air pollutant to which a standard applies.
c. §60.7(b) - Any owner or operator subject to the provisions of this part [*40 CFR 60*] shall maintain records of the occurrence and duration of any startup, shutdown, or malfunction in the operation of an affected facility; any malfunction of the air pollution control equipment.
[45CSR13 - Permit No. R13-1660 §B.4.]
(Title V permit condition 6.5.1)

All notifications and reports required pursuant to 40 CFR 60 under §60.7 shall be forwarded to the WVDAQ and USEPA as outlined in permit condition 3.5.3.
[45CSR13 - Permit No. R13-1660 §B.8.]
(Title V permit condition 6.5.2)

Are you in compliance with all applicable requirements for this emission unit? Yes

If no, complete the **Schedule of Compliance Form** as **ATTACHMENT F.**

ATTACHMENT E

SOURCES FOR EMISSION POINT MS46

UNIT 1 FLY ASH STORAGE SILO

(MTST-01-ID-STK-1)

ATTACHMENT E - Emission Unit Form

Emission Unit Description	*Unit 1 Fly Ash Loading*	
Emission unit ID number: MTST-01-ID-STK-1	**Emission unit name:** Source for emission unit MS46	**List any control devices associated with this emission unit:** FE

Provide a description of the emission unit (type, method of operation, design parameters, etc.):

88,000 cu ft concrete storage silo MTST-01-ID-STK-1 to primary ash mixer MTST-01-ADF-MC-1A and secondary mixer MTST-01-ADF-MC-1B

Manufacturer: Stone and Webster	**Model number:** N/A	**Serial number:** N/A
Construction date: 1963	**Installation date:** N/A	**Modification date(s):** N/A

Design Capacity (examples: furnaces - tons/hr, tanks - gallons):
88,000 cu ft

Maximum Hourly Throughput: 400 TN	**Maximum Annual Throughput:** 3,504,000 TN	**Maximum Operating Schedule:** 8,760 HR/YR

Fuel Usage Data **(fill out all applicable fields)**

Does this emission unit combust fuel? ___Yes __X_ No	**If yes, is it?** **___ Indirect Fired ___Direct Fired**
Maximum design heat input and/or maximum horsepower rating: N/A	**Type and Btu/hr rating of burners:** N/A

List the primary fuel type(s) and if applicable, the secondary fuel type(s). For each fuel type listed, provide the maximum hourly and annual fuel usage for each.
N/A

Describe each fuel expected to be used during the term of the permit.

Fuel Type	Max. Sulfur Content	Max. Ash Content	BTU Value
N/A	N/A	N/A	N/A

Emissions Data		
Criteria Pollutants	Potential Emissions	
	PPH	TPY
Carbon Monoxide (CO)	N/A	N/A
Nitrogen Oxides (NO_X)	N/A	N/A
Lead (Pb)	N/A	N/A
Particulate Matter ($PM_{2.5}$)	N/A	N/A
Particulate Matter (PM_{10})	N/A	N/A
Total Particulate Matter (TSP)	N/A	N/A
Sulfur Dioxide (SO_2)	N/A	N/A
Volatile Organic Compounds (VOC)	N/A	N/A
Hazardous Air Pollutants	Potential Emissions	
	PPH	TPY
	N/A	N/A
Regulated Pollutants other than Criteria and HAP	Potential Emissions	
	PPH	TPY
	N/A	N/A

List the method(s) used to calculate the potential emissions (include dates of any stack tests conducted, versions of software used, source and dates of emission factors, etc.).

See Emission Calculations in Attachment I
All emissions from ash silos will occur in mixers, therefore, PM and PM10 are not emitted from this emission unit.

Applicable Requirements

List all applicable requirements for this emission unit. For each applicable requirement, include the underlying rule/regulation citation and/or construction permit with the condition number. (Note: Title V permit condition numbers alone are not the underlying applicable requirements). If an emission limit is calculated based on the type of source and design capacity or if a standard is based on a design parameter, this information should also be included.

Fugitive Particulate Matter Control. No person shall cause, suffer, allow, or permit any source of fugitive particulate matter to operate that is not equipped with a fugitive particulate matter control system. This system shall be operated and maintained in such a manner as to minimize the emission of fugitive particulate matter. Sources of fugitive particulate matter associated with fuel burning units shall include, but not be limited to, the following:
a. Stockpiling of ash or fuel either in the open or in enclosures such as silos;
b. Transport of ash in vehicles or on conveying systems, to include spillage, tracking, or blowing of particulate matter from or by such vehicles or equipment; and
c. Ash or fuel handling systems and ash disposal areas.

[45CSR§2-5., 45CSR13, R13-2593 §4.1.6.]

(Title V permit condition 3.1.10)

X Permit Shield

For all applicable requirements listed above, provide monitoring/testing/recordkeeping/reporting which shall be used to demonstrate compliance. If the method is based on a permit or rule, include the condition number or citation. (Note: Each requirement listed above must have an associated method of demonstrating compliance. If there is not already a required method in place, then a method must be proposed.)

The permittee shall maintain records indicating the use of any dust suppressants or any other suitable dust control measures applied at the facility. The permittee shall also inspect all fugitive dust control systems weekly from May 1 through September 30 and monthly from October 1 through April 30 to ensure that they are operated and maintained in conformance with their designs. The permittee shall maintain records of all scheduled and non-scheduled maintenance and shall state any maintenance or corrective actions taken as a result of the weekly and/or monthly inspections, the times the fugitive dust control system(s) were inoperable and any corrective actions taken.

[45CSR§30-5.1.c.]

(Title V permit condition 3.4.4)

Are you in compliance with all applicable requirements for this emission unit? Yes

If no, complete the Schedule of Compliance Form as ATTACHMENT F.

ATTACHMENT E

SOURCES FOR EMISSION POINT MS47

UNIT 1 PRIMARY FLY ASH MIXER

(MTST-01-ADF-MC-1A)

ATTACHMENT E - Emission Unit Form

Emission Unit Description	*Unit 1 Fly Ash Loading*	
Emission unit ID number: MTST-01-ADF-MC-1A	**Emission unit name:** Source for emission point MS47	**List any control devices associated with this emission unit:** PE

Provide a description of the emission unit (type, method of operation, design parameters, etc.):
Unit 1 Primary Fly Ash Mixer to Ash Haul Trucks

Manufacturer:	**Model number:**	**Serial number:**
United Conveyor Systems	5024	020712PF
Construction date:	**Installation date:**	**Modification date(s):**
N/A	2003	N/A

Design Capacity (examples: furnaces - tons/hr, tanks - gallons):
400 TPH

Maximum Hourly Throughput:	**Maximum Annual Throughput:**	**Maximum Operating Schedule:**
400 TN	3,504,000 TN	8,760 HR/YR

Fuel Usage Data **(fill out all applicable fields)**

Does this emission unit combust fuel? ___Yes __X_ No	**If yes, is it?** **___ Indirect Fired ___Direct Fired**
Maximum design heat input and/or maximum horsepower rating: N/A	**Type and Btu/hr rating of burners:** N/A

List the primary fuel type(s) and if applicable, the secondary fuel type(s). For each fuel type listed, provide the maximum hourly and annual fuel usage for each.
N/A

Describe each fuel expected to be used during the term of the permit.

Fuel Type	Max. Sulfur Content	Max. Ash Content	BTU Value
N/A	N/A	N/A	N/A

Emissions Data		
Criteria Pollutants	Potential Emissions	
	PPH	TPY
Carbon Monoxide (CO)	N/A	N/A
Nitrogen Oxides (NO_X)	N/A	N/A
Lead (Pb)	N/A	N/A
Particulate Matter ($PM_{2.5}$)	N/A	N/A
Particulate Matter (PM_{10})	3.29E-02	1.44E-01
Total Particulate Matter (TSP)	6.95E-02	3.04E-01
Sulfur Dioxide (SO_2)	N/A	N/A
Volatile Organic Compounds (VOC)	N/A	N/A
Hazardous Air Pollutants	Potential Emissions	
	PPH	TPY
	N/A	N/A
Regulated Pollutants other than Criteria and HAP	Potential Emissions	
	PPH	TPY
	N/A	N/A

List the method(s) used to calculate the potential emissions (include dates of any stack tests conducted, versions of software used, source and dates of emission factors, etc.).

See Emission Calculations in Attachment I

Applicable Requirements

List all applicable requirements for this emission unit. For each applicable requirement, include the underlying rule/regulation citation and/or construction permit with the condition number. (Note: Title V permit condition numbers alone are not the underlying applicable requirements). If an emission limit is calculated based on the type of source and design capacity or if a standard is based on a design parameter, this information should also be included.

Fugitive Particulate Matter Control. No person shall cause, suffer, allow, or permit any source of fugitive particulate matter to operate that is not equipped with a fugitive particulate matter control system. This system shall be operated and maintained in such a manner as to minimize the emission of fugitive particulate matter. Sources of fugitive particulate matter associated with fuel burning units shall include, but not be limited to, the following:
a. Stockpiling of ash or fuel either in the open or in enclosures such as silos;
b. Transport of ash in vehicles or on conveying systems, to include spillage, tracking, or blowing of particulate matter from or by such vehicles or equipment; and
c. Ash or fuel handling systems and ash disposal areas.

[45CSR§2-5., 45CSR13, R13-2593 §4.1.6.]

(Title V permit condition 3.1.10)

X Permit Shield

For all applicable requirements listed above, provide monitoring/testing/recordkeeping/reporting which shall be used to demonstrate compliance. If the method is based on a permit or rule, include the condition number or citation. (Note: Each requirement listed above must have an associated method of demonstrating compliance. If there is not already a required method in place, then a method must be proposed.)

The permittee shall maintain records indicating the use of any dust suppressants or any other suitable dust control measures applied at the facility. The permittee shall also inspect all fugitive dust control systems weekly from May 1 through September 30 and monthly from October 1 through April 30 to ensure that they are operated and maintained in conformance with their designs. The permittee shall maintain records of all scheduled and non-scheduled maintenance and shall state any maintenance or corrective actions taken as a result of the weekly and/or monthly inspections, the times the fugitive dust control system(s) were inoperable and any corrective actions taken.

[45CSR§30-5.1.c.]

(Title V permit condition 3.4.4)

Are you in compliance with all applicable requirements for this emission unit? Yes

If no, complete the Schedule of Compliance Form as ATTACHMENT F.

ATTACHMENT E

SOURCES FOR EMISSION POINT MS48

UNIT 1 SECONDARY FLY ASH MIXER

(MTST-01-ADF-MC-1B)

ATTACHMENT E - Emission Unit Form

Emission Unit Description	*Unit 1 Fly Ash Loading*	
Emission unit ID number: MTST-01-ADF-MC-1B	**Emission unit name:** Source for emission point MS48	**List any control devices associated with this emission unit:** PE
Provide a description of the emission unit (type, method of operation, design parameters, etc.): Unit 1 Secondary Fly Ash Mixer to Ash Haul Trucks		
Manufacturer: United Conveyor Systems	**Model number:** 5024	**Serial number:** N/A
Construction date: N/A	**Installation date:** 1975	**Modification date(s):** 2009
Design Capacity (examples: furnaces - tons/hr, tanks - gallons): 400 TPH		
Maximum Hourly Throughput: 400 TN	**Maximum Annual Throughput:** 3,504,000 TN	**Maximum Operating Schedule:** 8,760 HR/YR
Fuel Usage Data **(fill out all applicable fields)**		
Does this emission unit combust fuel? ___Yes __X_ No		**If yes, is it?** **___ Indirect Fired ___Direct Fired**
Maximum design heat input and/or maximum horsepower rating: N/A		**Type and Btu/hr rating of burners:** N/A
List the primary fuel type(s) and if applicable, the secondary fuel type(s). For each fuel type listed, provide the maximum hourly and annual fuel usage for each. N/A		

Describe each fuel expected to be used during the term of the permit.

Fuel Type	Max. Sulfur Content	Max. Ash Content	BTU Value
N/A	N/A	N/A	N/A

Emissions Data		
Criteria Pollutants	Potential Emissions	
	PPH	TPY
Carbon Monoxide (CO)	N/A	N/A
Nitrogen Oxides (NO_X)	N/A	N/A
Lead (Pb)	N/A	N/A
Particulate Matter ($PM_{2.5}$)	N/A	N/A
Particulate Matter (PM_{10})	3.29E-02	1.44E-01
Total Particulate Matter (TSP)	6.95E-02	3.04E-01
Sulfur Dioxide (SO_2)	N/A	N/A
Volatile Organic Compounds (VOC)	N/A	N/A
Hazardous Air Pollutants	Potential Emissions	
	PPH	TPY
	N/A	N/A
Regulated Pollutants other than Criteria and HAP	Potential Emissions	
	PPH	TPY
	N/A	N/A

List the method(s) used to calculate the potential emissions (include dates of any stack tests conducted, versions of software used, source and dates of emission factors, etc.).

See Emission Calculations in Attachment I

Applicable Requirements

List all applicable requirements for this emission unit. For each applicable requirement, include the underlying rule/regulation citation and/or construction permit with the condition number. (Note: Title V permit condition numbers alone are not the underlying applicable requirements). If an emission limit is calculated based on the type of source and design capacity or if a standard is based on a design parameter, this information should also be included.

Fugitive Particulate Matter Control. No person shall cause, suffer, allow, or permit any source of fugitive particulate matter to operate that is not equipped with a fugitive particulate matter control system. This system shall be operated and maintained in such a manner as to minimize the emission of fugitive particulate matter. Sources of fugitive particulate matter associated with fuel burning units shall include, but not be limited to, the following:
a. Stockpiling of ash or fuel either in the open or in enclosures such as silos;
b. Transport of ash in vehicles or on conveying systems, to include spillage, tracking, or blowing of particulate matter from or by such vehicles or equipment; and
c. Ash or fuel handling systems and ash disposal areas.

[45CSR§2-5., 45CSR13, R13-2593 §4.1.6.]

(Title V permit condition 3.1.10)

X **Permit Shield**

For all applicable requirements listed above, provide monitoring/testing/recordkeeping/reporting which shall be used to demonstrate compliance. If the method is based on a permit or rule, include the condition number or citation. (Note: Each requirement listed above must have an associated method of demonstrating compliance. If there is not already a required method in place, then a method must be proposed.)

The permittee shall maintain records indicating the use of any dust suppressants or any other suitable dust control measures applied at the facility. The permittee shall also inspect all fugitive dust control systems weekly from May 1 through September 30 and monthly from October 1 through April 30 to ensure that they are operated and maintained in conformance with their designs. The permittee shall maintain records of all scheduled and non-scheduled maintenance and shall state any maintenance or corrective actions taken as a result of the weekly and/or monthly inspections, the times the fugitive dust control system(s) were inoperable and any corrective actions taken.

[45CSR§30-5.1.c.]

(Title V permit condition 3.4.4)

Are you in compliance with all applicable requirements for this emission unit? Yes

If no, complete the Schedule of Compliance Form as ATTACHMENT F.

ATTACHMENT E

SOURCES FOR EMISSION POINT MS49

UNIT 2 FLY ASH STORAGE SILO

(MTST-02-ID-STK-1)

ATTACHMENT E - Emission Unit Form

Emission Unit Description	*Unit 2 Fly Ash Loading*	
Emission unit ID number: MTST-02-ID-STK-1	**Emission unit name:** Source for emission point MS49	**List any control devices associated with this emission unit:** FE

Provide a description of the emission unit (type, method of operation, design parameters, etc.):

88,000 cu ft concrete storage silo MTST-02-ID-STK-1 to primary ash mixer MTST-02-ADF-MC-1A and secondary mixer MTST-02-ADF-MC-1B

Manufacturer: Stone and Webster	**Model number:** N/A	**Serial number:** N/A
Construction date: 1964	**Installation date:** N/A	**Modification date(s):** N/A

Design Capacity (examples: furnaces - tons/hr, tanks - gallons):
88,000 cu ft

Maximum Hourly Throughput: 400 TN	**Maximum Annual Throughput:** 3,504,000 TN	**Maximum Operating Schedule:** 8,760 HR/YR

Fuel Usage Data **(fill out all applicable fields)**

Does this emission unit combust fuel? ___Yes __X_ No	**If yes, is it?** **___ Indirect Fired ___Direct Fired**
Maximum design heat input and/or maximum horsepower rating: N/A	**Type and Btu/hr rating of burners:** N/A

List the primary fuel type(s) and if applicable, the secondary fuel type(s). For each fuel type listed, provide the maximum hourly and annual fuel usage for each.
N/A

Describe each fuel expected to be used during the term of the permit.

Fuel Type	Max. Sulfur Content	Max. Ash Content	BTU Value
N/A	N/A	N/A	N/A

Emissions Data		
Criteria Pollutants	Potential Emissions	
	PPH	TPY
Carbon Monoxide (CO)	N/A	N/A
Nitrogen Oxides (NO_X)	N/A	N/A
Lead (Pb)	N/A	N/A
Particulate Matter ($PM_{2.5}$)	N/A	N/A
Particulate Matter (PM_{10})	N/A	N/A
Total Particulate Matter (TSP)	N/A	N/A
Sulfur Dioxide (SO_2)	N/A	N/A
Volatile Organic Compounds (VOC)	N/A	N/A
Hazardous Air Pollutants	Potential Emissions	
	PPH	TPY
Regulated Pollutants other than Criteria and HAP	Potential Emissions	
	PPH	TPY

List the method(s) used to calculate the potential emissions (include dates of any stack tests conducted, versions of software used, source and dates of emission factors, etc.).

See Emission Calculations in Attachment I

All emissions from the ash silos will occur in mixers, therefore, throughput for this emission unit is set to zero.

Applicable Requirements

List all applicable requirements for this emission unit. For each applicable requirement, include the underlying rule/regulation citation and/or construction permit with the condition number. (Note: Title V permit condition numbers alone are not the underlying applicable requirements). If an emission limit is calculated based on the type of source and design capacity or if a standard is based on a design parameter, this information should also be included.

Fugitive Particulate Matter Control. No person shall cause, suffer, allow, or permit any source of fugitive particulate matter to operate that is not equipped with a fugitive particulate matter control system. This system shall be operated and maintained in such a manner as to minimize the emission of fugitive particulate matter. Sources of fugitive particulate matter associated with fuel burning units shall include, but not be limited to, the following:
a. Stockpiling of ash or fuel either in the open or in enclosures such as silos;
b. Transport of ash in vehicles or on conveying systems, to include spillage, tracking, or blowing of particulate matter from or by such vehicles or equipment; and
c. Ash or fuel handling systems and ash disposal areas.

[45CSR§2-5., 45CSR13, R13-2593 §4.1.6.]

(Title V permit condition 3.1.10)

X Permit Shield

For all applicable requirements listed above, provide monitoring/testing/recordkeeping/reporting which shall be used to demonstrate compliance. If the method is based on a permit or rule, include the condition number or citation. (Note: Each requirement listed above must have an associated method of demonstrating compliance. If there is not already a required method in place, then a method must be proposed.)

The permittee shall maintain records indicating the use of any dust suppressants or any other suitable dust control measures applied at the facility. The permittee shall also inspect all fugitive dust control systems weekly from May 1 through September 30 and monthly from October 1 through April 30 to ensure that they are operated and maintained in conformance with their designs. The permittee shall maintain records of all scheduled and non-scheduled maintenance and shall state any maintenance or corrective actions taken as a result of the weekly and/or monthly inspections, the times the fugitive dust control system(s) were inoperable and any corrective actions taken.

[45CSR§30-5.1.c.]

(Title V permit condition 3.4.4)

Are you in compliance with all applicable requirements for this emission unit? Yes

If no, complete the Schedule of Compliance Form as ATTACHMENT F.

ATTACHMENT E

SOURCES FOR EMISSION POINT MS50

UNIT 2 PRIMARY FLY ASH MIXER

(MTST-02-ADF-MC-1A)

ATTACHMENT E - Emission Unit Form

Emission Unit Description	*Unit 2 Fly Ash Loading*	
Emission unit ID number: MTST-02-ADF-MC-1A	**Emission unit name:** Source for emission point MS50	**List any control devices associated with this emission unit:** PE
Provide a description of the emission unit (type, method of operation, design parameters, etc.): Unit 2 Primary Fly Ash Mixer to Ash Haul Trucks		
Manufacturer: United Conveyor Systems	**Model number:** 5024	**Serial number:** 020725PF
Construction date: N/A	**Installation date:** 2003	**Modification date(s):** N/A
Design Capacity (examples: furnaces - tons/hr, tanks - gallons): 400 TPH		
Maximum Hourly Throughput: 400 TN	**Maximum Annual Throughput:** 3,504,000 TN	**Maximum Operating Schedule:** 8,760 HR/YR
Fuel Usage Data **(fill out all applicable fields)**		
Does this emission unit combust fuel? ___Yes __X_ No		**If yes, is it?** **___ Indirect Fired ___Direct Fired**
Maximum design heat input and/or maximum horsepower rating: N/A		**Type and Btu/hr rating of burners:** N/A
List the primary fuel type(s) and if applicable, the secondary fuel type(s). For each fuel type listed, provide the maximum hourly and annual fuel usage for each. N/A		

Describe each fuel expected to be used during the term of the permit.

Fuel Type	Max. Sulfur Content	Max. Ash Content	BTU Value
N/A	N/A	N/A	N/A

Emissions Data		
Criteria Pollutants	Potential Emissions	
	PPH	TPY
Carbon Monoxide (CO)	N/A	N/A
Nitrogen Oxides (NO_X)	N/A	N/A
Lead (Pb)	N/A	N/A
Particulate Matter ($PM_{2.5}$)	N/A	N/A
Particulate Matter (PM_{10})	3.29E-02	1.44E-01
Total Particulate Matter (TSP)	6.95E-02	3.04E-01
Sulfur Dioxide (SO_2)	N/A	N/A
Volatile Organic Compounds (VOC)	N/A	N/A
Hazardous Air Pollutants	Potential Emissions	
	PPH	TPY
	N/A	N/A
Regulated Pollutants other than Criteria and HAP	Potential Emissions	
	PPH	TPY
	N/A	N/A

List the method(s) used to calculate the potential emissions (include dates of any stack tests conducted, versions of software used, source and dates of emission factors, etc.).

See Emission Calculations in Attachment I

Applicable Requirements

List all applicable requirements for this emission unit. For each applicable requirement, include the underlying rule/regulation citation and/or construction permit with the condition number. (Note: Title V permit condition numbers alone are not the underlying applicable requirements). If an emission limit is calculated based on the type of source and design capacity or if a standard is based on a design parameter, this information should also be included.

Fugitive Particulate Matter Control. No person shall cause, suffer, allow, or permit any source of fugitive particulate matter to operate that is not equipped with a fugitive particulate matter control system. This system shall be operated and maintained in such a manner as to minimize the emission of fugitive particulate matter. Sources of fugitive particulate matter associated with fuel burning units shall include, but not be limited to, the following:
a. Stockpiling of ash or fuel either in the open or in enclosures such as silos;
b. Transport of ash in vehicles or on conveying systems, to include spillage, tracking, or blowing of particulate matter from or by such vehicles or equipment; and
c. Ash or fuel handling systems and ash disposal areas.

[45CSR§2-5., 45CSR13, R13-2593 §4.1.6.]

(Title V permit condition 3.1.10)

X Permit Shield

For all applicable requirements listed above, provide monitoring/testing/recordkeeping/reporting which shall be used to demonstrate compliance. If the method is based on a permit or rule, include the condition number or citation. (Note: Each requirement listed above must have an associated method of demonstrating compliance. If there is not already a required method in place, then a method must be proposed.)

The permittee shall maintain records indicating the use of any dust suppressants or any other suitable dust control measures applied at the facility. The permittee shall also inspect all fugitive dust control systems weekly from May 1 through September 30 and monthly from October 1 through April 30 to ensure that they are operated and maintained in conformance with their designs. The permittee shall maintain records of all scheduled and non-scheduled maintenance and shall state any maintenance or corrective actions taken as a result of the weekly and/or monthly inspections, the times the fugitive dust control system(s) were inoperable and any corrective actions taken.

[45CSR§30-5.1.c.]

(Title V permit condition 3.4.4)

Are you in compliance with all applicable requirements for this emission unit? Yes

If no, complete the Schedule of Compliance Form as ATTACHMENT F.

ATTACHMENT E

SOURCES FOR EMISSION POINT MS51

UNIT 2 SECONDARY FLY ASH MIXER

(MTST-02-ADF-MC-1B)

ATTACHMENT E - Emission Unit Form

Emission Unit Description	*Unit 2 Fly Ash Loading*	
Emission unit ID number: MTST-02-ADF-MC-1B	**Emission unit name:** Source for emission point MS51	**List any control devices associated with this emission unit:** PE
Provide a description of the emission unit (type, method of operation, design parameters, etc.): Unit 2 Secondary Fly Ash Mixer to Ash Haul Trucks		
Manufacturer: United Conveyor Systems	**Model number:** 1552-1	**Serial number:** N/A
Construction date: N/A	**Installation date:** 1975	**Modification date(s):** 1994
Design Capacity (examples: furnaces - tons/hr, tanks - gallons): 300 TPH		
Maximum Hourly Throughput: 300 TN	**Maximum Annual Throughput:** 2,628,000 TN	**Maximum Operating Schedule:** 8,760 HR/YR
Fuel Usage Data **(fill out all applicable fields)**		
Does this emission unit combust fuel? ___Yes __X_ No		**If yes, is it?** **___ Indirect Fired ___Direct Fired**
Maximum design heat input and/or maximum horsepower rating: N/A		**Type and Btu/hr rating of burners:** N/A
List the primary fuel type(s) and if applicable, the secondary fuel type(s). For each fuel type listed, provide the maximum hourly and annual fuel usage for each. N/A		

Describe each fuel expected to be used during the term of the permit.

Fuel Type	Max. Sulfur Content	Max. Ash Content	BTU Value
N/A	N/A	N/A	N/A

Emissions Data		
Criteria Pollutants	Potential Emissions	
	PPH	TPY
Carbon Monoxide (CO)	N/A	N/A
Nitrogen Oxides (NO_X)	N/A	N/A
Lead (Pb)	N/A	N/A
Particulate Matter ($PM_{2.5}$)	N/A	N/A
Particulate Matter (PM_{10})	2.46E-02	1.08E-01
Total Particulate Matter (TSP)	5.21E-02	2.28E-01
Sulfur Dioxide (SO_2)	N/A	N/A
Volatile Organic Compounds (VOC)	N/A	N/A
Hazardous Air Pollutants	Potential Emissions	
	PPH	TPY
	N/A	N/A
Regulated Pollutants other than Criteria and HAP	Potential Emissions	
	PPH	TPY
	N/A	N/A

List the method(s) used to calculate the potential emissions (include dates of any stack tests conducted, versions of software used, source and dates of emission factors, etc.).

See Emission Calculations in Attachment I

Applicable Requirements

List all applicable requirements for this emission unit. For each applicable requirement, include the underlying rule/regulation citation and/or construction permit with the condition number. (Note: Title V permit condition numbers alone are not the underlying applicable requirements). If an emission limit is calculated based on the type of source and design capacity or if a standard is based on a design parameter, this information should also be included.

Fugitive Particulate Matter Control. No person shall cause, suffer, allow, or permit any source of fugitive particulate matter to operate that is not equipped with a fugitive particulate matter control system. This system shall be operated and maintained in such a manner as to minimize the emission of fugitive particulate matter. Sources of fugitive particulate matter associated with fuel burning units shall include, but not be limited to, the following:
a. Stockpiling of ash or fuel either in the open or in enclosures such as silos;
b. Transport of ash in vehicles or on conveying systems, to include spillage, tracking, or blowing of particulate matter from or by such vehicles or equipment; and
c. Ash or fuel handling systems and ash disposal areas.

[45CSR§2-5., 45CSR13, R13-2593 §4.1.6.]

(Title V permit condition 3.1.10)

X Permit Shield

For all applicable requirements listed above, provide monitoring/testing/recordkeeping/reporting which shall be used to demonstrate compliance. If the method is based on a permit or rule, include the condition number or citation. (Note: Each requirement listed above must have an associated method of demonstrating compliance. If there is not already a required method in place, then a method must be proposed.)

The permittee shall maintain records indicating the use of any dust suppressants or any other suitable dust control measures applied at the facility. The permittee shall also inspect all fugitive dust control systems weekly from May 1 through September 30 and monthly from October 1 through April 30 to ensure that they are operated and maintained in conformance with their designs. The permittee shall maintain records of all scheduled and non-scheduled maintenance and shall state any maintenance or corrective actions taken as a result of the weekly and/or monthly inspections, the times the fugitive dust control system(s) were inoperable and any corrective actions taken.

[45CSR§30-5.1.c.]

(Title V permit condition 3.4.4)

Are you in compliance with all applicable requirements for this emission unit? Yes

If no, complete the Schedule of Compliance Form as ATTACHMENT F.

ATTACHMENT E

SOURCES FOR EMISSION POINT MS52

UNIT 3 FLY ASH STORAGE SILO

(MTST-03-ID-STK-1)

ATTACHMENT E - Emission Unit Form

Emission Unit Description	*Unit 3 Fly Ash Loading*	
Emission unit ID number: MTST-03-ID-STK-1	**Emission unit name:** Source for emission point MS52	**List any control devices associated with this emission unit:** FE

Provide a description of the emission unit (type, method of operation, design parameters, etc.):

125,000 cu ft concrete storage silo MTST-03-ID-STK-1 to primary ash mixer MTST-03-ADF-MC-1A and secondary mixer MTST-03-ADF-MC-1B

Manufacturer:	**Model number:**	**Serial number:**
Stone and Webster	N/A	N/A
Construction date:	**Installation date:**	**Modification date(s):**
1972	N/A	N/A

Design Capacity (examples: furnaces - tons/hr, tanks - gallons):
125,000 cu ft

Maximum Hourly Throughput:	**Maximum Annual Throughput:**	**Maximum Operating Schedule:**
400 TN	3,504,000 TN	8,760 HR/YR

Fuel Usage Data **(fill out all applicable fields)**

Does this emission unit combust fuel? ___Yes __X_ No	**If yes, is it?** **___ Indirect Fired ___Direct Fired**
Maximum design heat input and/or maximum horsepower rating: N/A	**Type and Btu/hr rating of burners:** N/A

List the primary fuel type(s) and if applicable, the secondary fuel type(s). For each fuel type listed, provide the maximum hourly and annual fuel usage for each.
N/A

Describe each fuel expected to be used during the term of the permit.

Fuel Type	Max. Sulfur Content	Max. Ash Content	BTU Value
N/A	N/A	N/A	N/A

Emissions Data		
Criteria Pollutants	Potential Emissions	
	PPH	TPY
Carbon Monoxide (CO)	N/A	N/A
Nitrogen Oxides (NO_X)	N/A	N/A
Lead (Pb)	N/A	N/A
Particulate Matter ($PM_{2.5}$)	N/A	N/A
Particulate Matter (PM_{10})	N/A	N/A
Total Particulate Matter (TSP)	N/A	N/A
Sulfur Dioxide (SO_2)	N/A	N/A
Volatile Organic Compounds (VOC)	N/A	N/A
Hazardous Air Pollutants	Potential Emissions	
	PPH	TPY
	N/A	N/A
Regulated Pollutants other than Criteria and HAP	Potential Emissions	
	PPH	TPY
	N/A	N/A

List the method(s) used to calculate the potential emissions (include dates of any stack tests conducted, versions of software used, source and dates of emission factors, etc.).

See Emission Calculations in Attachment I

All emissions from ash silos will occur in mixers, therefore, throughput for this emission unit is set to zero.

Applicable Requirements

List all applicable requirements for this emission unit. For each applicable requirement, include the underlying rule/regulation citation and/or construction permit with the condition number. (Note: Title V permit condition numbers alone are not the underlying applicable requirements). If an emission limit is calculated based on the type of source and design capacity or if a standard is based on a design parameter, this information should also be included.

Fugitive Particulate Matter Control. No person shall cause, suffer, allow, or permit any source of fugitive particulate matter to operate that is not equipped with a fugitive particulate matter control system. This system shall be operated and maintained in such a manner as to minimize the emission of fugitive particulate matter. Sources of fugitive particulate matter associated with fuel burning units shall include, but not be limited to, the following:
a. Stockpiling of ash or fuel either in the open or in enclosures such as silos;
b. Transport of ash in vehicles or on conveying systems, to include spillage, tracking, or blowing of particulate matter from or by such vehicles or equipment; and
c. Ash or fuel handling systems and ash disposal areas.

[45CSR§2-5., 45CSR13, R13-2593 §4.1.6.]

(Title V permit condition 3.1.10)

X Permit Shield

For all applicable requirements listed above, provide monitoring/testing/recordkeeping/reporting which shall be used to demonstrate compliance. If the method is based on a permit or rule, include the condition number or citation. (Note: Each requirement listed above must have an associated method of demonstrating compliance. If there is not already a required method in place, then a method must be proposed.)

The permittee shall maintain records indicating the use of any dust suppressants or any other suitable dust control measures applied at the facility. The permittee shall also inspect all fugitive dust control systems weekly from May 1 through September 30 and monthly from October 1 through April 30 to ensure that they are operated and maintained in conformance with their designs. The permittee shall maintain records of all scheduled and non-scheduled maintenance and shall state any maintenance or corrective actions taken as a result of the weekly and/or monthly inspections, the times the fugitive dust control system(s) were inoperable and any corrective actions taken.

[45CSR§30-5.1.c.]

(Title V permit condition 3.4.4)

Are you in compliance with all applicable requirements for this emission unit? Yes

If no, complete the Schedule of Compliance Form as ATTACHMENT F.

ATTACHMENT E

SOURCES FOR EMISSION POINT MS53

UNIT 3 PRIMARY FLY ASH MIXER

(MTST-03-ADF-MC-1A)

ATTACHMENT E - Emission Unit Form

Emission Unit Description	*Unit 3 Fly Ash Loading*	
Emission unit ID number: MTST-03-ADF-MC-1A	**Emission unit name:** Source for emission unit MS53	**List any control devices associated with this emission unit:** PE
Provide a description of the emission unit (type, method of operation, design parameters, etc.): Unit 3 Primary Fly Ash Mixer to Ash Haul Trucks		
Manufacturer: United Conveyor Systems	**Model number:** 5024	**Serial number:** 020725PF
Construction date: N/A	**Installation date:** 2003	**Modification date(s):** N/A
Design Capacity (examples: furnaces - tons/hr, tanks - gallons): 400 TPH		
Maximum Hourly Throughput: 400 TN	**Maximum Annual Throughput:** 3,504,000 TN	**Maximum Operating Schedule:** 8,760 HR/YR
Fuel Usage Data **(fill out all applicable fields)**		
Does this emission unit combust fuel? ___Yes __X_ No		**If yes, is it?** **___ Indirect Fired ___Direct Fired**
Maximum design heat input and/or maximum horsepower rating: N/A		**Type and Btu/hr rating of burners:** N/A
List the primary fuel type(s) and if applicable, the secondary fuel type(s). For each fuel type listed, provide the maximum hourly and annual fuel usage for each. N/A		

Describe each fuel expected to be used during the term of the permit.

Fuel Type	Max. Sulfur Content	Max. Ash Content	BTU Value
N/A	N/A	N/A	N/A

Emissions Data		
Criteria Pollutants	Potential Emissions	
	PPH	TPY
Carbon Monoxide (CO)	N/A	N/A
Nitrogen Oxides (NO_X)	N/A	N/A
Lead (Pb)	N/A	N/A
Particulate Matter ($PM_{2.5}$)	N/A	N/A
Particulate Matter (PM_{10})	3.29E-02	1.44E-01
Total Particulate Matter (TSP)	6.95E-02	3.04E-01
Sulfur Dioxide (SO_2)	N/A	N/A
Volatile Organic Compounds (VOC)	N/A	N/A
Hazardous Air Pollutants	Potential Emissions	
	PPH	TPY
	N/A	N/A
Regulated Pollutants other than Criteria and HAP	Potential Emissions	
	PPH	TPY
	N/A	N/A

List the method(s) used to calculate the potential emissions (include dates of any stack tests conducted, versions of software used, source and dates of emission factors, etc.).

See Emission Calculations in Attachment I

Applicable Requirements

List all applicable requirements for this emission unit. For each applicable requirement, include the underlying rule/regulation citation and/or construction permit with the condition number. (Note: Title V permit condition numbers alone are not the underlying applicable requirements). If an emission limit is calculated based on the type of source and design capacity or if a standard is based on a design parameter, this information should also be included.

Fugitive Particulate Matter Control. No person shall cause, suffer, allow, or permit any source of fugitive particulate matter to operate that is not equipped with a fugitive particulate matter control system. This system shall be operated and maintained in such a manner as to minimize the emission of fugitive particulate matter. Sources of fugitive particulate matter associated with fuel burning units shall include, but not be limited to, the following:

a. Stockpiling of ash or fuel either in the open or in enclosures such as silos;
b. Transport of ash in vehicles or on conveying systems, to include spillage, tracking, or blowing of particulate matter from or by such vehicles or equipment; and
c. Ash or fuel handling systems and ash disposal areas.

[45CSR§2-5., 45CSR13, R13-2593 §4.1.6.]

(Title V permit condition 3.1.10)

X Permit Shield

For all applicable requirements listed above, provide monitoring/testing/recordkeeping/reporting which shall be used to demonstrate compliance. If the method is based on a permit or rule, include the condition number or citation. (Note: Each requirement listed above must have an associated method of demonstrating compliance. If there is not already a required method in place, then a method must be proposed.)

The permittee shall maintain records indicating the use of any dust suppressants or any other suitable dust control measures applied at the facility. The permittee shall also inspect all fugitive dust control systems weekly from May 1 through September 30 and monthly from October 1 through April 30 to ensure that they are operated and maintained in conformance with their designs. The permittee shall maintain records of all scheduled and non-scheduled maintenance and shall state any maintenance or corrective actions taken as a result of the weekly and/or monthly inspections, the times the fugitive dust control system(s) were inoperable and any corrective actions taken.

[45CSR§30-5.1.c.]

(Title V permit condition 3.4.4)

Are you in compliance with all applicable requirements for this emission unit? Yes

If no, complete the Schedule of Compliance Form as ATTACHMENT F.

ATTACHMENT E

SOURCES FOR EMISSION POINT MS54

UNIT 3 SECONDARY FLY ASH MIXER

(MTST-03-ADF-MC-1B)

ATTACHMENT E - Emission Unit Form

Emission Unit Description	*Unit 3 Fly Ash Loading*	
Emission unit ID number: MTST-03-ADF-MC-1B	**Emission unit name:** Source for emission point MS54	**List any control devices associated with this emission unit:** PE
Provide a description of the emission unit (type, method of operation, design parameters, etc.): Unit 3 Secondary Fly Ash Mixer to Ash Haul Trucks		
Manufacturer: United Conveyor Systems	**Model number:** 5024	**Serial number:** N/A
Construction date: N/A	**Installation date:** 1972	**Modification date(s):** 2008
Design Capacity (examples: furnaces - tons/hr, tanks - gallons): 400 TPH		
Maximum Hourly Throughput: 400 TN	**Maximum Annual Throughput:** 3,504,000 TN	**Maximum Operating Schedule:** 8,760 HR/YR
***Fuel Usage Data* (fill out all applicable fields)**		
Does this emission unit combust fuel? ___Yes __X_ No		**If yes, is it?** **___ Indirect Fired ___Direct Fired**
Maximum design heat input and/or maximum horsepower rating: N/A		**Type and Btu/hr rating of burners:** N/A
List the primary fuel type(s) and if applicable, the secondary fuel type(s). For each fuel type listed, provide the maximum hourly and annual fuel usage for each. N/A		

Describe each fuel expected to be used during the term of the permit.

Fuel Type	Max. Sulfur Content	Max. Ash Content	BTU Value
N/A	N/A	N/A	N/A

Emissions Data		
Criteria Pollutants	Potential Emissions	
	PPH	TPY
Carbon Monoxide (CO)	N/A	N/A
Nitrogen Oxides (NO_X)	N/A	N/A
Lead (Pb)	N/A	N/A
Particulate Matter ($PM_{2.5}$)	N/A	N/A
Particulate Matter (PM_{10})	3.29E-02	1.44E-01
Total Particulate Matter (TSP)	6.95E-02	3.04E-01
Sulfur Dioxide (SO_2)	N/A	N/A
Volatile Organic Compounds (VOC)	N/A	N/A
Hazardous Air Pollutants	Potential Emissions	
	PPH	TPY
	N/A	N/A
Regulated Pollutants other than Criteria and HAP	Potential Emissions	
	PPH	TPY
	N/A	N/A

List the method(s) used to calculate the potential emissions (include dates of any stack tests conducted, versions of software used, source and dates of emission factors, etc.).

See Emission Calculations in Attachment I

Applicable Requirements

List all applicable requirements for this emission unit. For each applicable requirement, include the underlying rule/regulation citation and/or construction permit with the condition number. (Note: Title V permit condition numbers alone are not the underlying applicable requirements). If an emission limit is calculated based on the type of source and design capacity or if a standard is based on a design parameter, this information should also be included.

Fugitive Particulate Matter Control. No person shall cause, suffer, allow, or permit any source of fugitive particulate matter to operate that is not equipped with a fugitive particulate matter control system. This system shall be operated and maintained in such a manner as to minimize the emission of fugitive particulate matter. Sources of fugitive particulate matter associated with fuel burning units shall include, but not be limited to, the following:
a. Stockpiling of ash or fuel either in the open or in enclosures such as silos;
b. Transport of ash in vehicles or on conveying systems, to include spillage, tracking, or blowing of particulate matter from or by such vehicles or equipment; and
c. Ash or fuel handling systems and ash disposal areas.

[45CSR§2-5., 45CSR13, R13-2593 §4.1.6.]

(Title V permit condition 3.1.10)

X Permit Shield

For all applicable requirements listed above, provide monitoring/testing/recordkeeping/reporting which shall be used to demonstrate compliance. If the method is based on a permit or rule, include the condition number or citation. (Note: Each requirement listed above must have an associated method of demonstrating compliance. If there is not already a required method in place, then a method must be proposed.)

The permittee shall maintain records indicating the use of any dust suppressants or any other suitable dust control measures applied at the facility. The permittee shall also inspect all fugitive dust control systems weekly from May 1 through September 30 and monthly from October 1 through April 30 to ensure that they are operated and maintained in conformance with their designs. The permittee shall maintain records of all scheduled and non-scheduled maintenance and shall state any maintenance or corrective actions taken as a result of the weekly and/or monthly inspections, the times the fugitive dust control system(s) were inoperable and any corrective actions taken.

[45CSR§30-5.1.c.]

(Title V permit condition 3.4.4)

Are you in compliance with all applicable requirements for this emission unit? Yes

If no, complete the Schedule of Compliance Form as ATTACHMENT F.

ATTACHMENT E

SOURCES FOR EMISSION POINT MS55

PYRITE STORAGE TANK

(MTST-00-ADB-TK-3)

ATTACHMENT E - Emission Unit Form

Emission Unit Description

Emission unit ID number:	**Emission unit name:**	**List any control devices associated with this emission unit:**
MTST-00-ADB-TK-3	Source for emission point MS55	Full Enclosure, DC

Provide a description of the emission unit (type, method of operation, design parameters, etc.):
Pyrite storage tank to mixer MTST-00-ADB-MC-1

Manufacturer:	**Model number:**	**Serial number:**
Mixer Systems, Inc	Dustmaster S11	2641-94
Construction date:	**Installation date:**	**Modification date(s):**
1982	1982	N/A

Design Capacity (examples: furnaces - tons/hr, tanks - gallons):
1200TPH

Maximum Hourly Throughput:	**Maximum Annual Throughput:**	**Maximum Operating Schedule:**
1200TPH	10,512,000 TN	8760 hours

Fuel Usage Data **(fill out all applicable fields) NOT APPLICABLE**

Does this emission unit combust fuel? ___Yes _X__ No	**If yes, is it?** ___ Indirect Fired ___Direct Fired
Maximum design heat input and/or maximum horsepower rating: N/A	**Type and Btu/hr rating of burners:** N/A

List the primary fuel type(s) and if applicable, the secondary fuel type(s). For each fuel type listed, provide the maximum hourly and annual fuel usage for each.
N/A

Describe each fuel expected to be used during the term of the permit.

Fuel Type	Max. Sulfur Content	Max. Ash Content	BTU Value
N/A	N/A	N/A	N/A

Emissions Data		
Criteria Pollutants	Potential Emissions	
	PPH	TPY
Carbon Monoxide (CO)	N/A	N/A
Nitrogen Oxides (NO_X)	N/A	N/A
Lead (Pb)	N/A	N/A
Particulate Matter ($PM_{2.5}$)	N/A	N/A
Particulate Matter (PM_{10})	N/A	N/A
Total Particulate Matter (TSP)	N/A	N/A
Sulfur Dioxide (SO_2)	N/A	N/A
Volatile Organic Compounds (VOC)	N/A	N/A
Hazardous Air Pollutants	Potential Emissions	
	PPH	TPY
	N/A	N/A
Regulated Pollutants other than Criteria and HAP	Potential Emissions	
	PPH	TPY
	N/A	N/A

List the method(s) used to calculate the potential emissions (include dates of any stack tests conducted, versions of software used, source and dates of emission factors, etc.).

See Emission Calculations in Attachment I
All emissions from ash silos will occur in mixers, therefore, throughput for this emission unit is set to zero.

Applicable Requirements

List all applicable requirements for this emission unit. For each applicable requirement, include the underlying rule/regulation citation and/or construction permit with the condition number. (Note: Title V permit condition numbers alone are not the underlying applicable requirements). If an emission limit is calculated based on the type of source and design capacity or if a standard is based on a design parameter, this information should also be included.

The permittee shall maintain records indicating the use of any dust suppressants or any other suitable dust control measures applied at the facility. The permittee shall also inspect all fugitive dust control systems weekly from May 1 through September 30 and monthly from October 1 through April 30 to ensure that they are operated and maintained in conformance with their designs. The permittee shall maintain records of all scheduled and non-scheduled maintenance and shall state any maintenance or corrective actions taken as a result of the weekly and/or monthly inspections, the times the fugitive dust control system(s) were inoperable and any corrective actions taken.

[45CSR§30-5.1.c.]

(Title V permit condition 3.4.4)

X Permit Shield

For all applicable requirements listed above, provide monitoring/testing/recordkeeping/reporting which shall be used to demonstrate compliance. If the method is based on a permit or rule, include the condition number or citation. (Note: Each requirement listed above must have an associated method of demonstrating compliance. If there is not already a required method in place, then a method must be proposed.)

The permittee shall maintain records indicating the use of any dust suppressants or any other suitable dust control measures applied at the facility. The permittee shall also inspect all fugitive dust control systems weekly from May 1 through September 30 and monthly from October 1 through April 30 to ensure that they are operated and maintained in conformance with their designs. The permittee shall maintain records of all scheduled and non-scheduled maintenance and shall state any maintenance or corrective actions taken as a result of the weekly and/or monthly inspections, the times the fugitive dust control system(s) were inoperable and any corrective actions taken.

[45CSR§30-5.1.c.]

(Title V permit condition 3.4.4)

Are you in compliance with all applicable requirements for this emission unit? Yes

If no, complete the Schedule of Compliance Form as ATTACHMENT F.

ATTACHMENT E

SOURCES FOR EMISSION POINT MS56

PYRITE MIXER

(MTST-00-ADB-MC-1)

ATTACHMENT E - Emission Unit Form

Emission Unit Description

Emission unit ID number:	**Emission unit name:**	**List any control devices associated with this emission unit:**
MTST-00-ADB-MC-1	Source for emission point MS56	Moisture Content (MC)

Provide a description of the emission unit (type, method of operation, design parameters, etc.):
Pyrite mixer to ash haul trucks

Manufacturer:	**Model number:**	**Serial number:**
N/A	N/A	N/A
Construction date:	**Installation date:**	**Modification date(s):**
1994	1994	N/A

Design Capacity (examples: furnaces - tons/hr, tanks - gallons):
200TPH

Maximum Hourly Throughput:	**Maximum Annual Throughput:**	**Maximum Operating Schedule:**
200TPH	1,752,000 TN	8760 hours

Fuel Usage Data **(fill out all applicable fields) NOT APPLICABLE**

Does this emission unit combust fuel? ___Yes _X__ No	**If yes, is it?** ___ Indirect Fired ___Direct Fired
Maximum design heat input and/or maximum horsepower rating: N/A	**Type and Btu/hr rating of burners:** N/A

List the primary fuel type(s) and if applicable, the secondary fuel type(s). For each fuel type listed, provide the maximum hourly and annual fuel usage for each.
N/A

Describe each fuel expected to be used during the term of the permit.

Fuel Type	Max. Sulfur Content	Max. Ash Content	BTU Value
N/A	N/A	N/A	N/A

Emissions Data		
Criteria Pollutants	Potential Emissions	
	PPH	TPY
Carbon Monoxide (CO)	N/A	N/A
Nitrogen Oxides (NO_X)	N/A	N/A
Lead (Pb)	N/A	N/A
Particulate Matter ($PM_{2.5}$)	N/A	N/A
Particulate Matter (PM_{10})	1.64E-02	7.20E-02
Total Particulate Matter (TSP)	3.47E-02	1.52E-01
Sulfur Dioxide (SO_2)	N/A	N/A
Volatile Organic Compounds (VOC)	N/A	N/A
Hazardous Air Pollutants	Potential Emissions	
	PPH	TPY
	N/A	N/A
Regulated Pollutants other than Criteria and HAP	Potential Emissions	
	PPH	TPY
	N/A	N/A

List the method(s) used to calculate the potential emissions (include dates of any stack tests conducted, versions of software used, source and dates of emission factors, etc.).

See Emission Calculations in Attachment I

Applicable Requirements

List all applicable requirements for this emission unit. For each applicable requirement, include the underlying rule/regulation citation and/or construction permit with the condition number. (Note: Title V permit condition numbers alone are not the underlying applicable requirements). If an emission limit is calculated based on the type of source and design capacity or if a standard is based on a design parameter, this information should also be included.

The permittee shall maintain records indicating the use of any dust suppressants or any other suitable dust control measures applied at the facility. The permittee shall also inspect all fugitive dust control systems weekly from May 1 through September 30 and monthly from October 1 through April 30 to ensure that they are operated and maintained in conformance with their designs. The permittee shall maintain records of all scheduled and non-scheduled maintenance and shall state any maintenance or corrective actions taken as a result of the weekly and/or monthly inspections, the times the fugitive dust control system(s) were inoperable and any corrective actions taken.

[45CSR§30-5.1.c.]

(Title V permit condition 3.4.4)

X Permit Shield

For all applicable requirements listed above, provide monitoring/testing/recordkeeping/reporting which shall be used to demonstrate compliance. If the method is based on a permit or rule, include the condition number or citation. (Note: Each requirement listed above must have an associated method of demonstrating compliance. If there is not already a required method in place, then a method must be proposed.)

The permittee shall maintain records indicating the use of any dust suppressants or any other suitable dust control measures applied at the facility. The permittee shall also inspect all fugitive dust control systems weekly from May 1 through September 30 and monthly from October 1 through April 30 to ensure that they are operated and maintained in conformance with their designs. The permittee shall maintain records of all scheduled and non-scheduled maintenance and shall state any maintenance or corrective actions taken as a result of the weekly and/or monthly inspections, the times the fugitive dust control system(s) were inoperable and any corrective actions taken.

[45CSR§30-5.1.c.]

(Title V permit condition 3.4.4)

Are you in compliance with all applicable requirements for this emission unit? Yes

If no, complete the Schedule of Compliance Form as ATTACHMENT F.

ATTACHMENT E

SOURCES FOR EMISSION POINT MS57

VACUUM FILTER

(MTST-00-SWD-M-FL-1A, MTST-00-SWD-M-FL-1B)

ATTACHMENT E - Emission Unit Form

Emission Unit Description	*Units 1 & 2 FGD De-watering*	
Emission unit ID number: MTST-00-SWD-M-FL-1A MTST-00-SWD-M-FL-1B	**Emission unit name:** Sources for Emission Point MS57: Units 1 & 2 FGD Vacuum Filters and De-watering Building	**List any control devices associated with this emission unit:** FE

Provide a description of the emission unit (type, method of operation, design parameters, etc.):
FGD gypsum cake transfer from the vacuum filter to the de-watering building

Manufacturer:	**Model number:**	**Serial number:**
GL&V/DOOR-OLIVER EIMCO	M.148	N/A
Construction date: 2001	**Installation date:** 2001	**Modification date(s):** N/A

Design Capacity (examples: furnaces - tons/hr, tanks - gallons):
27 TPH ea.

Maximum Hourly Throughput:	**Maximum Annual Throughput:**	**Maximum Operating Schedule:**
54 TN	473,040 TN	8,760 HR/YR

Fuel Usage Data **(fill out all applicable fields)**

Does this emission unit combust fuel? ___Yes __X_ No	**If yes, is it?** **___ Indirect Fired ___Direct Fired**
Maximum design heat input and/or maximum horsepower rating: N/A	**Type and Btu/hr rating of burners:** N/A

List the primary fuel type(s) and if applicable, the secondary fuel type(s). For each fuel type listed, provide the maximum hourly and annual fuel usage for each.
N/A

Describe each fuel expected to be used during the term of the permit.

Fuel Type	Max. Sulfur Content	Max. Ash Content	BTU Value
N/A	N/A	N/A	N/A

Emissions Data		
Criteria Pollutants	Potential Emissions	
	PPH	TPY
Carbon Monoxide (CO)	N/A	N/A
Nitrogen Oxides (NO_X)	N/A	N/A
Lead (Pb)	N/A	N/A
Particulate Matter ($PM_{2.5}$)	N/A	N/A
Particulate Matter (PM_{10})	4.44E-05	1.94E-04
Total Particulate Matter (TSP)	9.38E-05	4.11E-04
Sulfur Dioxide (SO_2)	N/A	N/A
Volatile Organic Compounds (VOC)	N/A	N/A
Hazardous Air Pollutants	Potential Emissions	
	PPH	TPY
	N/A	N/A
Regulated Pollutants other than Criteria and HAP	Potential Emissions	
	PPH	TPY
	N/A	N/A

List the method(s) used to calculate the potential emissions (include dates of any stack tests conducted, versions of software used, source and dates of emission factors, etc.).

See Emission Calculations in Attachment I.

Applicable Requirements

List all applicable requirements for this emission unit. For each applicable requirement, include the underlying rule/regulation citation and/or construction permit with the condition number. (*Note: Title V permit condition numbers alone are not the underlying applicable requirements*). If an emission limit is calculated based on the type of source and design capacity or if a standard is based on a design parameter, this information should also be included.

The maximum annual amount of FGD By-Product disposed of on or off-site shall not exceed 630,000 tons per year. Compliance with the processing limit shall be determined using a rolling yearly total.
[45CSR13 - Permit No. R13-1660 §A.5.] (Title V permit condition 6.1.5)

FGD by-product shall be maintained at a sufficient moisture content so as to minimize fugitive particulate matter emissions prior to final deposition at the on-site landfill. FGD by-product loading operations that result in any visible particulate matter emissions shall be considered not to be minimized. Compliance with this condition shall be determined in accordance with 6.3.2. & 6.4.1.
[45CSR13 - Permit No. R13-1660 §A.10.] (Title v permit condition 6.1.10)

__X__ Permit Shield

For all applicable requirements listed above, provide monitoring/testing/recordkeeping/reporting which shall be used to demonstrate compliance. If the method is based on a permit or rule, include the condition number or citation. (Note: Each requirement listed above must have an associated method of demonstrating compliance. If there is not already a required method in place, then a method must be proposed.)

Each emissions unit with a visible emissions limit contained in this permit section (Section 6) shall be observed visually at least each calendar month during periods of normal facility operation for a sufficient time interval to determine if the unit has any visible emissions using 40 C.F.R. 60 Appendix A, Method 22. If visible emissions from any of the emissions units are observed during these monthly observations, or at any other time, that appear to exceed 50 percent of the allowable visible emission requirement for the emission unit, visible emissions evaluations in accordance with 40 C.F.R. 60 Appendix A, Method 9 shall be conducted as soon as practicable, but no later than one (1) month from the time of the observation. A Method 9 evaluation shall not be required if the visible emissions condition is corrected in a timely manner; the emissions unit is operating at normal operating conditions; and, the cause and corrective measures taken are recorded.
[45CSR13 - Permit No. R13-1660 §A.12.a)](Title V permit condition 6.3.2)

A record of each visible emissions observation as required in permit condition 6.3.2. and/or 6.3.3. shall be maintained, including any data required by 40 C.F.R. 60 Appendix A, Method 22 or Method 9, whichever is appropriate. The record shall include, at a minimum, the date, time, name of the emission unit, the applicable visible emissions requirement, the results of the observation, and the name of the observer.
[45CSR13 - Permit No. R13-1660 §A.12.b)] (Title V permit condition 6.4.1)

For the purposes of determining compliance with maximum throughput limits set forth in conditions 6.1.3., 6.1.4., and 6.1.5. the applicant shall maintain monthly records of the throughputs of the specified materials. For the purposes of determining compliance with the water truck requirement in condition 6.1.7., the applicant shall maintain a daily and monthly record of water truck usage. Such records shall be retained by the permittee for at least five (5) years. Certified records shall be made available to the Director or his/her duly authorized representative upon request.
[45CSR13 - Permit No. R13-1660 §B.7.] (Title V permit condition 6.4.2)

All notifications and reports required pursuant to 40 CFR 60 under §60.7 shall be forwarded to the WVDAQ and USEPA as outlined in permit condition 3.5.3.
[45CSR13 - Permit No. R13-1660 §B.8.]
(Title V permit condition 6.5.2)

Are you in compliance with all applicable requirements for this emission unit? Yes

If no, complete the **Schedule of Compliance Form** as **ATTACHMENT F.**

ATTACHMENT E

SOURCES FOR EMISSION POINT MS58

VACUUM FILTER

(MTST-03-SWD-M-FL-1A, MTST-03-SWD-M-FL-1B)

ATTACHMENT E - Emission Unit Form

Emission Unit Description	*Unit 3 FGD De-watering*	
Emission unit ID number: MTST-03-SWD-M-FL-1A MTST-03-SWD-M-FL-1B	**Emission unit name:** Sources for Emission Point MS58: Unit 3 FGD Vacuum Filters and De-watering Building	**List any control devices associated with this emission unit:** FE

Provide a description of the emission unit (type, method of operation, design parameters, etc.):
FGD gypsum cake transfer from the vacuum filter to the de-watering building

Manufacturer: **Vacuum Filters:** GL&V/DOOR-OLIVER EIMCO	**Model number:** M.148	**Serial number:** N/A
Construction date: 1994	**Installation date:** 1994	**Modification date(s):** N/A

Design Capacity (examples: furnaces - tons/hr, tanks - gallons):
27 TPH ea.

Maximum Hourly Throughput: 54 TN	**Maximum Annual Throughput:** 473,040 TN	**Maximum Operating Schedule:** 8,760 HR/YR

Fuel Usage Data **(fill out all applicable fields)**

Does this emission unit combust fuel? ___Yes __X_ No	**If yes, is it?** **___ Indirect Fired ___Direct Fired**
Maximum design heat input and/or maximum horsepower rating: N/A	**Type and Btu/hr rating of burners:** N/A

List the primary fuel type(s) and if applicable, the secondary fuel type(s). For each fuel type listed, provide the maximum hourly and annual fuel usage for each.
N/A

Describe each fuel expected to be used during the term of the permit.

Fuel Type	Max. Sulfur Content	Max. Ash Content	BTU Value
N/A	N/A	N/A	N/A

Emissions Data		
Criteria Pollutants	Potential Emissions	
	PPH	TPY
Carbon Monoxide (CO)	N/A	N/A
Nitrogen Oxides (NO_X)	N/A	N/A
Lead (Pb)	N/A	N/A
Particulate Matter ($PM_{2.5}$)	N/A	N/A
Particulate Matter (PM_{10})	1.33E-03	5.83E-03
Total Particulate Matter (TSP)	2.81E-03	1.23E-02
Sulfur Dioxide (SO_2)	N/A	N/A
Volatile Organic Compounds (VOC)	N/A	N/A
Hazardous Air Pollutants	Potential Emissions	
	PPH	TPY
	N/A	N/A
Regulated Pollutants other than Criteria and HAP	Potential Emissions	
	PPH	TPY
	N/A	N/A

List the method(s) used to calculate the potential emissions (include dates of any stack tests conducted, versions of software used, source and dates of emission factors, etc.).

See Emission Calculations in Attachment I.

Applicable Requirements

List all applicable requirements for this emission unit. For each applicable requirement, include the underlying rule/regulation citation and/or construction permit with the condition number. (*Note: Title V permit condition numbers alone are not the underlying applicable requirements*). If an emission limit is calculated based on the type of source and design capacity or if a standard is based on a design parameter, this information should also be included.

The maximum annual amount of FGD By-Product disposed of on or off-site shall not exceed 630,000 tons per year. Compliance with the processing limit shall be determined using a rolling yearly total.
[45CSR13 - Permit No. R13-1660 §A.5.] (Title V permit condition 6.1.5)

FGD by-product shall be maintained at a sufficient moisture content so as to minimize fugitive particulate matter emissions prior to final deposition at the on-site landfill. FGD by-product loading operations that result in any visible particulate matter emissions shall be considered not to be minimized. Compliance with this condition shall be determined in accordance with 6.3.2. & 6.4.1.
[45CSR13 - Permit No. R13-1660 §A.10.] (Title v permit condition 6.1.10)

__X__ Permit Shield

For all applicable requirements listed above, provide monitoring/testing/recordkeeping/reporting which shall be used to demonstrate compliance. If the method is based on a permit or rule, include the condition number or citation. (Note: Each requirement listed above must have an associated method of demonstrating compliance. If there is not already a required method in place, then a method must be proposed.)

Each emissions unit with a visible emissions limit contained in this permit section (Section 6) shall be observed visually at least each calendar month during periods of normal facility operation for a sufficient time interval to determine if the unit has any visible emissions using 40 C.F.R. 60 Appendix A, Method 22. If visible emissions from any of the emissions units are observed during these monthly observations, or at any other time, that appear to exceed 50 percent of the allowable visible emission requirement for the emission unit, visible emissions evaluations in accordance with 40 C.F.R. 60 Appendix A, Method 9 shall be conducted as soon as practicable, but no later than one (1) month from the time of the observation. A Method 9 evaluation shall not be required if the visible emissions condition is corrected in a timely manner; the emissions unit is operating at normal operating conditions; and, the cause and corrective measures taken are recorded.
[45CSR13 - Permit No. R13-1660 §A.12.a)](Title V permit condition 6.3.2)

A record of each visible emissions observation as required in permit condition 6.3.2. and/or 6.3.3. shall be maintained, including any data required by 40 C.F.R. 60 Appendix A, Method 22 or Method 9, whichever is appropriate. The record shall include, at a minimum, the date, time, name of the emission unit, the applicable visible emissions requirement, the results of the observation, and the name of the observer.
[45CSR13 - Permit No. R13-1660 §A.12.b)] (Title V permit condition 6.4.1)

For the purposes of determining compliance with maximum throughput limits set forth in conditions 6.1.3., 6.1.4., and 6.1.5. the applicant shall maintain monthly records of the throughputs of the specified materials. For the purposes of determining compliance with the water truck requirement in condition 6.1.7., the applicant shall maintain a daily and monthly record of water truck usage. Such records shall be retained by the permittee for at least five (5) years. Certified records shall be made available to the Director or his/her duly authorized representative upon request.
[45CSR13 - Permit No. R13-1660 §B.7.] (Title V permit condition 6.4.2)

All notifications and reports required pursuant to 40 CFR 60 under §60.7 shall be forwarded to the WVDAQ and USEPA as outlined in permit condition 3.5.3.
[45CSR13 - Permit No. R13-1660 §B.8.]
(Title V permit condition 6.5.2)

Are you in compliance with all applicable requirements for this emission unit? Yes
If no, complete the **Schedule of Compliance Form** as **ATTACHMENT F.**

ATTACHMENT E

SOURCES FOR EMISSION POINT MS59

DIESEL FIRE PUMP

(MTST-00-FP-ENG-1)

ATTACHMENT E - Emission Unit Form

Emission Unit Description

Emission unit ID number:	**Emission unit name:**	**List any control devices associated with this emission unit:**
MTST-00-FP-ENG-1	Emission unit for MS59	None

Provide a description of the emission unit (type, method of operation, design parameters, etc.):
Emission unit MTST-00-FP-ENG-1 is a 2000 gpm at 125 psi driven by 150 hp diesel engine located in the fire pump house. This engine is used for fire protection.

Manufacturer:	**Model number:**	**Serial number:**
Detroit Diesel	7 Series	N/A
Construction date:	**Installation date:**	**Modification date(s):**
1981	1981	N/A

Design Capacity (examples: furnaces - tons/hr, tanks - gallons):

The #1 diesel fire pump has a design capacity of 188hp

Maximum Hourly Throughput:	**Maximum Annual Throughput:**	**Maximum Operating Schedule:**
N/A	N/A	8,760 hours

Fuel Usage Data **(fill out all applicable fields)**

Does this emission unit combust fuel? __X_ Yes ___ No	**If yes, is it?** ___ Indirect Fired __X_ Direct Fired
Maximum design heat input and/or maximum horsepower rating: 188hp	**Type and Btu/hr rating of burners:** N/A

List the primary fuel type(s) and if applicable, the secondary fuel type(s). For each fuel type listed, provide the maximum hourly and annual fuel usage for each.

The fuel type for the #1 diesel fire pump is diesel fuel.

Describe each fuel expected to be used during the term of the permit.

Fuel Type	Max. Sulfur Content	Max. Ash Content	BTU Value
Diesel	N/A	N/A	141,000

Emissions Data		
Criteria Pollutants	Potential Emissions	
	PPH	TPY
Carbon Monoxide (CO)	1.26E+00	0.314
Nitrogen Oxides (NO_X)	5.83E+00	1.457
Lead (Pb)	0.00E+00	0.000
Particulate Matter ($PM_{2.5}$)	N/A	N/A
Particulate Matter (PM_{10})	4.14E-01	0.103
Total Particulate Matter (TSP)	4.14E-01	0.103
Sulfur Dioxide (SO_2)	3.85E-01	0.096
Volatile Organic Compounds (VOC)	4.64E-01	0.116
Hazardous Air Pollutants	Potential Emissions	
	PPH	TPY
Regulated Pollutants other than Criteria and HAP	Potential Emissions	
	PPH	TPY

List the method(s) used to calculate the potential emissions (include dates of any stack tests conducted, versions of software used, source and dates of emission factors, etc.).

See Emission Calculations in Attachment I

Applicable Requirements

List all applicable requirements for this emission unit. For each applicable requirement, include the underlying rule/regulation citation and/or construction permit with the condition number. (*Note: Title V permit condition numbers alone are not the underlying applicable requirements*). If an emission limit is calculated based on the type of source and design capacity or if a standard is based on a design parameter, this information should also be included.

No emissions unit-specific applicable requirements for this source.

__X__ Permit Shield

For all applicable requirements listed above, provide monitoring/testing/recordkeeping/reporting which shall be used to demonstrate compliance. If the method is based on a permit or rule, include the condition number or citation. (Note: Each requirement listed above must have an associated method of demonstrating compliance. If there is not already a required method in place, then a method must be proposed.)

No emissions unit-specific applicable requirements for this source.

Are you in compliance with all applicable requirements for this emission unit? Yes

If no, complete the **Schedule of Compliance Form** as **ATTACHMENT F.**

ATTACHMENT E

SOURCES FOR EMISSION POINT MS60

DIESEL FIRE PUMP

(MTST-00-FP-ENG-3)

ATTACHMENT E - Emission Unit Form

Emission Unit Description

Emission unit ID number:	**Emission unit name:**	**List any control devices associated with this emission unit:**
MTST-00-FP-ENG-3	Emission unit for MS60	None

Provide a description of the emission unit (type, method of operation, design parameters, etc.):
Emission unit MTST-00-FP-ENG-3 is a 1500 gpm at 370ft TDH diesel engine driven fire pump locate in the screenwell house. This engine is used for fire protection.

Manufacturer:	**Model number:**	**Serial number:**
Detroit Diesel	7000	1680882
Construction date:	**Installation date:**	**Modification date(s):**
1994	1994	N/A

Design Capacity (examples: furnaces - tons/hr, tanks - gallons):
The #3 diesel fire pump has a design capacity of 335.5 max bhp

Maximum Hourly Throughput:	**Maximum Annual Throughput:**	**Maximum Operating Schedule:**
N/A	N/A	8,760 hours

Fuel Usage Data **(fill out all applicable fields)**

Does this emission unit combust fuel? __X__ Yes ___ No	**If yes, is it?** ___ Indirect Fired __X__ Direct Fired
Maximum design heat input and/or maximum horsepower rating: 335.5 max bhp	**Type and Btu/hr rating of burners:** N/A

List the primary fuel type(s) and if applicable, the secondary fuel type(s). For each fuel type listed, provide the maximum hourly and annual fuel usage for each.

The fuel type for the #3 diesel fire pump is diesel fuel.

Describe each fuel expected to be used during the term of the permit.

Fuel Type	Max. Sulfur Content	Max. Ash Content	BTU Value
Diesel			

Emissions Data		
Criteria Pollutants	Potential Emissions	
	PPH	TPY
Carbon Monoxide (CO)	2.24E+00	0.560
Nitrogen Oxides (NO_X)	1.04E+01	2.600
Lead (Pb)	0.00E+00	0.000
Particulate Matter ($PM_{2.5}$)	N/A	N/A
Particulate Matter (PM_{10})	7.38E-01	0.185
Total Particulate Matter (TSP)	7.38E-01	0.185
Sulfur Dioxide (SO_2)	6.88E-01	0.172
Volatile Organic Compounds (VOC)	8.29E-01	0.207
Hazardous Air Pollutants	Potential Emissions	
	PPH	TPY
	N/A	N/A
Regulated Pollutants other than Criteria and HAP	Potential Emissions	
	PPH	TPY
	N/A	N/A

List the method(s) used to calculate the potential emissions (include dates of any stack tests conducted, versions of software used, source and dates of emission factors, etc.).

See Emission Calculations in Attachment I

Applicable Requirements

List all applicable requirements for this emission unit. For each applicable requirement, include the underlying rule/regulation citation and/or construction permit with the condition number. (*Note: Title V permit condition numbers alone are not the underlying applicable requirements*). If an emission limit is calculated based on the type of source and design capacity or if a standard is based on a design parameter, this information should also be included.

No emissions unit-specific applicable requirements for this source.

__X__ Permit Shield

For all applicable requirements listed above, provide monitoring/testing/recordkeeping/reporting which shall be used to demonstrate compliance. If the method is based on a permit or rule, include the condition number or citation. (Note: Each requirement listed above must have an associated method of demonstrating compliance. If there is not already a required method in place, then a method must be proposed.)

No emissions unit-specific applicable requirements for this source.

Are you in compliance with all applicable requirements for this emission unit? Yes

If no, complete the **Schedule of Compliance Form** as **ATTACHMENT F.**

ATTACHMENT E

SOURCES FOR EMISSION POINT MS61

CLEAN LUBE OIL TANK

(MTST-00-LO-TK-3)

ATTACHMENT E - Emission Unit Form

Emission Unit Description

Emission unit ID number:	**Emission unit name:**	**List any control devices associated with this emission unit:**
MTST-00-LO-TK-3	Emission unit for MS61	None

Provide a description of the emission unit (type, method of operation, design parameters, etc.):
Emission unit MTST-00-LO-TK-3 is the clean turbine lube oil tank located inside the turbine lube oil room

Manufacturer:	**Model number:**	**Serial number:**
Richard Engineering Company	Custom Built	N/A
Construction date:	**Installation date:**	**Modification date(s):**
N/A	1964	N/A

Design Capacity (examples: furnaces - tons/hr, tanks - gallons):
16,000 gallons

Maximum Hourly Throughput:	**Maximum Annual Throughput:**	**Maximum Operating Schedule:**
N/A		8760 hours

Fuel Usage Data **(fill out all applicable fields)**

Does this emission unit combust fuel? ___Yes __X_ No	**If yes, is it?** ___ Indirect Fired ___Direct Fired
Maximum design heat input and/or maximum horsepower rating: N/A	**Type and Btu/hr rating of burners:** N/A

List the primary fuel type(s) and if applicable, the secondary fuel type(s). For each fuel type listed, provide the maximum hourly and annual fuel usage for each.

N/A

Describe each fuel expected to be used during the term of the permit.

Fuel Type	Max. Sulfur Content	Max. Ash Content	BTU Value
N/A	N/A	N/A	N/A

Emissions Data		
Criteria Pollutants	Potential Emissions	
	PPH	TPY
Carbon Monoxide (CO)	N/A	N/A
Nitrogen Oxides (NO_X)	N/A	N/A
Lead (Pb)	N/A	N/A
Particulate Matter ($PM_{2.5}$)	N/A	N/A
Particulate Matter (PM_{10})	N/A	N/A
Total Particulate Matter (TSP)	N/A	N/A
Sulfur Dioxide (SO_2)	N/A	N/A
Volatile Organic Compounds (VOC)	N/A	N/A
Hazardous Air Pollutants	Potential Emissions	
	PPH	TPY
	N/A	N/A
Regulated Pollutants other than Criteria and HAP	Potential Emissions	
	PPH	TPY
	N/A	N/A

List the method(s) used to calculate the potential emissions (include dates of any stack tests conducted, versions of software used, source and dates of emission factors, etc.).

See Emission Calculations in Attachment I

Applicable Requirements

List all applicable requirements for this emission unit. For each applicable requirement, include the underlying rule/regulation citation and/or construction permit with the condition number. (*Note: Title V permit condition numbers alone are not the underlying applicable requirements*). If an emission limit is calculated based on the type of source and design capacity or if a standard is based on a design parameter, this information should also be included.

No emissions unit-specific applicable requirements for this source.

__X__ Permit Shield

For all applicable requirements listed above, provide monitoring/testing/recordkeeping/reporting which shall be used to demonstrate compliance. If the method is based on a permit or rule, include the condition number or citation. (Note: Each requirement listed above must have an associated method of demonstrating compliance. If there is not already a required method in place, then a method must be proposed.)

No emissions unit-specific applicable requirements for this source.

Are you in compliance with all applicable requirements for this emission unit? Yes

If no, complete the **Schedule of Compliance Form** as **ATTACHMENT F.**

ATTACHMENT E

SOURCES FOR EMISSION POINT MS62

DIRTY TURBINE LUBE OIL TANK

(MTST-00-LO-TK-4)

ATTACHMENT E - Emission Unit Form

Emission Unit Description

Emission unit ID number:	**Emission unit name:**	**List any control devices associated with this emission unit:**
MTST-00-LO-TK-4	Emission units for MS62	None

Provide a description of the emission unit (type, method of operation, design parameters, etc.):
Emission unit MTST-00-LO-TK-4 is the dirty turbine lube oil tank located inside the turbine lube oil room.

Manufacturer:	**Model number:**	**Serial number:**
Richard Engineering Company	Custom Built	N/A
Construction date:	**Installation date:**	**Modification date(s):**
N/A	1964	N/A

Design Capacity (examples: furnaces - tons/hr, tanks - gallons):
16,000 gallons each

Maximum Hourly Throughput:	**Maximum Annual Throughput:**	**Maximum Operating Schedule:**
N/A	N/A	8760 hours

Fuel Usage Data **(fill out all applicable fields)**

Does this emission unit combust fuel? ___Yes __X__ No	**If yes, is it?** ___ Indirect Fired ___Direct Fired
Maximum design heat input and/or maximum horsepower rating: N/A	**Type and Btu/hr rating of burners:** N/A

List the primary fuel type(s) and if applicable, the secondary fuel type(s). For each fuel type listed, provide the maximum hourly and annual fuel usage for each.

N/A

Describe each fuel expected to be used during the term of the permit.

Fuel Type	Max. Sulfur Content	Max. Ash Content	BTU Value
N/A	N/A	N/A	N/A

Emissions Data		
Criteria Pollutants	Potential Emissions	
	PPH	TPY
Carbon Monoxide (CO)	N/A	N/A
Nitrogen Oxides (NO_X)	N/A	N/A
Lead (Pb)	N/A	N/A
Particulate Matter ($PM_{2.5}$)	N/A	N/A
Particulate Matter (PM_{10})	N/A	N/A
Total Particulate Matter (TSP)	N/A	N/A
Sulfur Dioxide (SO_2)	N/A	N/A
Volatile Organic Compounds (VOC)	N/A	N/A
Hazardous Air Pollutants	Potential Emissions	
	PPH	TPY
	N/A	N/A
Regulated Pollutants other than Criteria and HAP	Potential Emissions	
	PPH	TPY
	N/A	N/A

List the method(s) used to calculate the potential emissions (include dates of any stack tests conducted, versions of software used, source and dates of emission factors, etc.).

See Emission Calculations in Attachment I

Applicable Requirements

List all applicable requirements for this emission unit. For each applicable requirement, include the underlying rule/regulation citation and/or construction permit with the condition number. (*Note: Title V permit condition numbers alone are not the underlying applicable requirements*). If an emission limit is calculated based on the type of source and design capacity or if a standard is based on a design parameter, this information should also be included.

No emissions unit-specific applicable requirements for this source.

__X__ Permit Shield

For all applicable requirements listed above, provide monitoring/testing/recordkeeping/reporting which shall be used to demonstrate compliance. If the method is based on a permit or rule, include the condition number or citation. (Note: Each requirement listed above must have an associated method of demonstrating compliance. If there is not already a required method in place, then a method must be proposed.)

No emissions unit-specific applicable requirements for this source.

Are you in compliance with all applicable requirements for this emission unit? Yes

If no, complete the **Schedule of Compliance Form** as **ATTACHMENT F.**

ATTACHMENT E

SOURCES FOR EMISSION POINT MS63

JET FUEL OIL TANK

(MTST-00-FO-TK-4)

ATTACHMENT E - Emission Unit Form

Emission Unit Description

Emission unit ID number:	**Emission unit name:**	**List any control devices associated with this emission unit:**
MTST-00-FO-TK-4	Emission unit for MS63	None

Provide a description of the emission unit (type, method of operation, design parameters, etc.):
Emission unit MTST-00-FO-TK-4 is the Jet fuel oil tank for the combustion turbine

Manufacturer:	**Model number:**	**Serial number:**
Industrial Mechanical Services	API 650 APPX A	N/A
Construction date:	**Installation date:**	**Modification date(s):**
1992	1992	N/A

Design Capacity (examples: furnaces - tons/hr, tanks - gallons):
105,000 gallons

Maximum Hourly Throughput:	**Maximum Annual Throughput:**	**Maximum Operating Schedule:**
N/A	N/A	8760 hours

Fuel Usage Data **(fill out all applicable fields)**

Does this emission unit combust fuel? ___Yes __X__ No	**If yes, is it?** ___ Indirect Fired ___Direct Fired
Maximum design heat input and/or maximum horsepower rating: N/A	**Type and Btu/hr rating of burners:** N/A

List the primary fuel type(s) and if applicable, the secondary fuel type(s). For each fuel type listed, provide the maximum hourly and annual fuel usage for each.
N/A

Describe each fuel expected to be used during the term of the permit.

Fuel Type	Max. Sulfur Content	Max. Ash Content	BTU Value
N/A	N/A	N/A	N/A

Emissions Data		
Criteria Pollutants	Potential Emissions	
	PPH	TPY
Carbon Monoxide (CO)	N/A	N/A
Nitrogen Oxides (NO_X)	N/A	N/A
Lead (Pb)	N/A	N/A
Particulate Matter ($PM_{2.5}$)	N/A	N/A
Particulate Matter (PM_{10})	N/A	N/A
Total Particulate Matter (TSP)	N/A	N/A
Sulfur Dioxide (SO_2)	N/A	N/A
Volatile Organic Compounds (VOC)	N/A	N/A
Hazardous Air Pollutants	Potential Emissions	
	PPH	TPY
	N/A	N/A
Regulated Pollutants other than Criteria and HAP	Potential Emissions	
	PPH	TPY
	N/A	N/A

List the method(s) used to calculate the potential emissions (include dates of any stack tests conducted, versions of software used, source and dates of emission factors, etc.).

See Emission Calculations in Attachment I

Applicable Requirements

List all applicable requirements for this emission unit. For each applicable requirement, include the underlying rule/regulation citation and/or construction permit with the condition number. (*Note: Title V permit condition numbers alone are not the underlying applicable requirements*). If an emission limit is calculated based on the type of source and design capacity or if a standard is based on a design parameter, this information should also be included.

No emissions unit-specific applicable requirements for this source.

__X__ Permit Shield

For all applicable requirements listed above, provide monitoring/testing/recordkeeping/reporting which shall be used to demonstrate compliance. If the method is based on a permit or rule, include the condition number or citation. (Note: Each requirement listed above must have an associated method of demonstrating compliance. If there is not already a required method in place, then a method must be proposed.)

No emissions unit-specific applicable requirements for this source.

Are you in compliance with all applicable requirements for this emission unit? Yes

If no, complete the **Schedule of Compliance Form** as **ATTACHMENT F.**

ATTACHMENT E

SOURCES FOR EMISSION POINT MS64

FUEL OIL TANK FOR LOCOMOTIVE

(MTST-00-FO-TK-1)

ATTACHMENT E - Emission Unit Form

Emission Unit Description

Emission unit ID number:	**Emission unit name:**	**List any control devices associated with this emission unit:**
MTST-00-FO-TK-1	Emission unit for MS64	None

Provide a description of the emission unit (type, method of operation, design parameters, etc.):
Emission unit MTST-00-FO-TK-1 is the Fuel oil tank for locomotive

Manufacturer:	**Model number:**	**Serial number:**
N/A	N/A	N/A
Construction date:	**Installation date:**	**Modification date(s):**
1964	1964	N/A

Design Capacity (examples: furnaces - tons/hr, tanks - gallons):
25,000 gallons

Maximum Hourly Throughput:	**Maximum Annual Throughput:**	**Maximum Operating Schedule:**
N/A	N/A	8760 hours

Fuel Usage Data **(fill out all applicable fields)**

Does this emission unit combust fuel? ___Yes __X__ No	**If yes, is it?** ___ Indirect Fired ___Direct Fired
Maximum design heat input and/or maximum horsepower rating: N/A	**Type and Btu/hr rating of burners:** N/A

List the primary fuel type(s) and if applicable, the secondary fuel type(s). For each fuel type listed, provide the maximum hourly and annual fuel usage for each.

N/A

Describe each fuel expected to be used during the term of the permit.

Fuel Type	Max. Sulfur Content	Max. Ash Content	BTU Value
N/A	N/A	N/A	N/A

Emissions Data		
Criteria Pollutants	Potential Emissions	
	PPH	TPY
Carbon Monoxide (CO)	N/A	N/A
Nitrogen Oxides (NO_X)	N/A	N/A
Lead (Pb)	N/A	N/A
Particulate Matter ($PM_{2.5}$)	N/A	N/A
Particulate Matter (PM_{10})	N/A	N/A
Total Particulate Matter (TSP)	N/A	N/A
Sulfur Dioxide (SO_2)	N/A	N/A
Volatile Organic Compounds (VOC)	N/A	N/A
Hazardous Air Pollutants	Potential Emissions	
	PPH	TPY
	N/A	N/A
Regulated Pollutants other than Criteria and HAP	Potential Emissions	
	PPH	TPY
	N/A	N/A

List the method(s) used to calculate the potential emissions (include dates of any stack tests conducted, versions of software used, source and dates of emission factors, etc.).

See Emission Calculations in Attachment I

Applicable Requirements

List all applicable requirements for this emission unit. For each applicable requirement, include the underlying rule/regulation citation and/or construction permit with the condition number. (*Note: Title V permit condition numbers alone are not the underlying applicable requirements*). If an emission limit is calculated based on the type of source and design capacity or if a standard is based on a design parameter, this information should also be included.

No emissions unit-specific applicable requirements for this source.

__X__ Permit Shield

For all applicable requirements listed above, provide monitoring/testing/recordkeeping/reporting which shall be used to demonstrate compliance. If the method is based on a permit or rule, include the condition number or citation. (Note: Each requirement listed above must have an associated method of demonstrating compliance. If there is not already a required method in place, then a method must be proposed.)

No emissions unit-specific applicable requirements for this source.

Are you in compliance with all applicable requirements for this emission unit? Yes

If no, complete the **Schedule of Compliance Form** as **ATTACHMENT F.**

ATTACHMENT E

SOURCES FOR EMISSION POINT MS65

GASOLINE TANK

(MTST-00-FO-TK-6G)

ATTACHMENT E - Emission Unit Form

Emission Unit Description

Emission unit ID number:	**Emission unit name:**	**List any control devices associated with this emission unit:**
MTST-00-FO-TK-6G	Emission unit for MS65	Full Enclosure

Provide a description of the emission unit (type, method of operation, design parameters, etc.):
Emission unit MTST-00-FO-TK-6G is the unleaded gasoline tank for fueling vehicles located on the south side of warehouse.

Manufacturer:	**Model number:**	**Serial number:**
Hoover Containment Systems	6000	N/A
Construction date:	**Installation date:**	**Modification date(s):**
1995	1995	N/A

Design Capacity (examples: furnaces - tons/hr, tanks - gallons):
5,000 gallons

Maximum Hourly Throughput:	**Maximum Annual Throughput:**	**Maximum Operating Schedule:**
N/A	N/A	8760 hours

Fuel Usage Data **(fill out all applicable fields)**

Does this emission unit combust fuel? ___Yes __X__ No	**If yes, is it?** ___ Indirect Fired ___Direct Fired
Maximum design heat input and/or maximum horsepower rating: N/A	**Type and Btu/hr rating of burners:** N/A

List the primary fuel type(s) and if applicable, the secondary fuel type(s). For each fuel type listed, provide the maximum hourly and annual fuel usage for each.
N/A

Describe each fuel expected to be used during the term of the permit.

Fuel Type	Max. Sulfur Content	Max. Ash Content	BTU Value
N/A	N/A	N/A	N/A

Emissions Data		
Criteria Pollutants	Potential Emissions	
	PPH	TPY
Carbon Monoxide (CO)	N/A	N/A
Nitrogen Oxides (NO_X)	N/A	N/A
Lead (Pb)	N/A	N/A
Particulate Matter ($PM_{2.5}$)	N/A	N/A
Particulate Matter (PM_{10})	N/A	N/A
Total Particulate Matter (TSP)	N/A	N/A
Sulfur Dioxide (SO_2)	N/A	N/A
Volatile Organic Compounds (VOC)	N/A	N/A
Hazardous Air Pollutants	Potential Emissions	
	PPH	TPY
	N/A	N/A
Regulated Pollutants other than Criteria and HAP	Potential Emissions	
	PPH	TPY
	N/A	N/A

List the method(s) used to calculate the potential emissions (include dates of any stack tests conducted, versions of software used, source and dates of emission factors, etc.).

See Emission Calculations in Attachment I

Applicable Requirements

List all applicable requirements for this emission unit. For each applicable requirement, include the underlying rule/regulation citation and/or construction permit with the condition number. (*Note: Title V permit condition numbers alone are not the underlying applicable requirements*). If an emission limit is calculated based on the type of source and design capacity or if a standard is based on a design parameter, this information should also be included.

No emissions unit-specific applicable requirements for this source.

__X__ Permit Shield

For all applicable requirements listed above, provide monitoring/testing/recordkeeping/reporting which shall be used to demonstrate compliance. If the method is based on a permit or rule, include the condition number or citation. (Note: Each requirement listed above must have an associated method of demonstrating compliance. If there is not already a required method in place, then a method must be proposed.)

No emissions unit-specific applicable requirements for this source.

Are you in compliance with all applicable requirements for this emission unit? Yes

If no, complete the **Schedule of Compliance Form** as **ATTACHMENT F.**

ATTACHMENT E

SOURCES FOR EMISSION POINT MS66

FUEL OIL TANK 1A

(MTST-00-IO-TK-1A)

ATTACHMENT E - Emission Unit Form

Emission Unit Description

Emission unit ID number:	**Emission unit name:**	**List any control devices associated with this emission unit:**
MTST-00-IO-TK-1A	Emission unit for MS66	None

Provide a description of the emission unit (type, method of operation, design parameters, etc.):
Emission unit MTST-00-IO-TK-1A is the tank containing Light #2 fuel oil used for boiler startup

Manufacturer:	**Model number:**	**Serial number:**
N/A	N/A	N/A
Construction date:	**Installation date:**	**Modification date(s):**
1964	1964	N/A

Design Capacity (examples: furnaces - tons/hr, tanks - gallons):
504,501 gallons

Maximum Hourly Throughput:	**Maximum Annual Throughput:**	**Maximum Operating Schedule:**
N/A	N/A	8760 hours

Fuel Usage Data **(fill out all applicable fields)**

Does this emission unit combust fuel? ___Yes __X_ No	**If yes, is it?** ___ Indirect Fired ___Direct Fired
Maximum design heat input and/or maximum horsepower rating: N/A	**Type and Btu/hr rating of burners:** N/A

List the primary fuel type(s) and if applicable, the secondary fuel type(s). For each fuel type listed, provide the maximum hourly and annual fuel usage for each.
N/A

Describe each fuel expected to be used during the term of the permit.

Fuel Type	Max. Sulfur Content	Max. Ash Content	BTU Value
N/A	N/A	N/A	N/A

Emissions Data		
Criteria Pollutants	Potential Emissions	
	PPH	TPY
Carbon Monoxide (CO)	N/A	N/A
Nitrogen Oxides (NO_X)	N/A	N/A
Lead (Pb)	N/A	N/A
Particulate Matter ($PM_{2.5}$)	N/A	N/A
Particulate Matter (PM_{10})	N/A	N/A
Total Particulate Matter (TSP)	N/A	N/A
Sulfur Dioxide (SO_2)	N/A	N/A
Volatile Organic Compounds (VOC)	N/A	N/A
Hazardous Air Pollutants	Potential Emissions	
	PPH	TPY
	N/A	N/A
Regulated Pollutants other than Criteria and HAP	Potential Emissions	
	PPH	TPY
	N/A	N/A

List the method(s) used to calculate the potential emissions (include dates of any stack tests conducted, versions of software used, source and dates of emission factors, etc.).

See Emission Calculations in Attachment I

Applicable Requirements

List all applicable requirements for this emission unit. For each applicable requirement, include the underlying rule/regulation citation and/or construction permit with the condition number. (*Note: Title V permit condition numbers alone are not the underlying applicable requirements*). If an emission limit is calculated based on the type of source and design capacity or if a standard is based on a design parameter, this information should also be included.

No emissions unit-specific applicable requirements for this source.

__X__ Permit Shield

For all applicable requirements listed above, provide monitoring/testing/recordkeeping/reporting which shall be used to demonstrate compliance. If the method is based on a permit or rule, include the condition number or citation. (Note: Each requirement listed above must have an associated method of demonstrating compliance. If there is not already a required method in place, then a method must be proposed.)

No emissions unit-specific applicable requirements for this source.

Are you in compliance with all applicable requirements for this emission unit? Yes

If no, complete the **Schedule of Compliance Form** as **ATTACHMENT F.**

ATTACHMENT E

SOURCES FOR EMISSION POINT MS67

FUEL OIL TANK 1B

(MTST-00-IO-TK-1B)

ATTACHMENT E - Emission Unit Form

Emission Unit Description

Emission unit ID number:	**Emission unit name:**	**List any control devices associated with this emission unit:**
MTST-00-IO-TK-1B	Emission unit for MS67	None

Provide a description of the emission unit (type, method of operation, design parameters, etc.):
Emission unit MTST-00-IO-TK-1B is the tank containing Light #2 fuel oil used for boiler startup

Manufacturer:	**Model number:**	**Serial number:**
N/A	N/A	N/A
Construction date:	**Installation date:**	**Modification date(s):**
1973	1973	N/A

Design Capacity (examples: furnaces - tons/hr, tanks - gallons):
1,541,526 gallons

Maximum Hourly Throughput:	**Maximum Annual Throughput:**	**Maximum Operating Schedule:**
N/A	N/A	8760 hours

Fuel Usage Data **(fill out all applicable fields)**

Does this emission unit combust fuel? ___Yes __X__ No	**If yes, is it?** ___ Indirect Fired ___Direct Fired
Maximum design heat input and/or maximum horsepower rating: N/A	**Type and Btu/hr rating of burners:** N/A

List the primary fuel type(s) and if applicable, the secondary fuel type(s). For each fuel type listed, provide the maximum hourly and annual fuel usage for each.
N/A

Describe each fuel expected to be used during the term of the permit.

Fuel Type	Max. Sulfur Content	Max. Ash Content	BTU Value
N/A	N/A	N/A	N/A

Emissions Data		
Criteria Pollutants	Potential Emissions	
	PPH	TPY
Carbon Monoxide (CO)	N/A	N/A
Nitrogen Oxides (NO_X)	N/A	N/A
Lead (Pb)	N/A	N/A
Particulate Matter ($PM_{2.5}$)	N/A	N/A
Particulate Matter (PM_{10})	N/A	N/A
Total Particulate Matter (TSP)	N/A	N/A
Sulfur Dioxide (SO_2)	N/A	N/A
Volatile Organic Compounds (VOC)	N/A	N/A
Hazardous Air Pollutants	Potential Emissions	
	PPH	TPY
	N/A	N/A
Regulated Pollutants other than Criteria and HAP	Potential Emissions	
	PPH	TPY
	N/A	N/A

List the method(s) used to calculate the potential emissions (include dates of any stack tests conducted, versions of software used, source and dates of emission factors, etc.).

See Emission Calculations in Attachment I

Applicable Requirements

List all applicable requirements for this emission unit. For each applicable requirement, include the underlying rule/regulation citation and/or construction permit with the condition number. (*Note: Title V permit condition numbers alone are not the underlying applicable requirements*). If an emission limit is calculated based on the type of source and design capacity or if a standard is based on a design parameter, this information should also be included.

No emissions unit-specific applicable requirements for this source.

__X__ Permit Shield

For all applicable requirements listed above, provide monitoring/testing/recordkeeping/reporting which shall be used to demonstrate compliance. If the method is based on a permit or rule, include the condition number or citation. (Note: Each requirement listed above must have an associated method of demonstrating compliance. If there is not already a required method in place, then a method must be proposed.)

No emissions unit-specific applicable requirements for this source.

Are you in compliance with all applicable requirements for this emission unit? Yes

If no, complete the **Schedule of Compliance Form** as **ATTACHMENT F.**

ATTACHMENT E

SOURCES FOR EMISSION POINT MS68

UNIT 1 COOLING TOWER

(1-CC-E-1A, 1-CC-E-1B, 1-CC-E-1C)

ATTACHMENT E - Emission Unit Form

Emission Unit Description

Emission unit ID number:	**Emission unit name:**	**List any control devices associated with this emission unit:**
1-CC-E-1A 1-CC-E-1B 1-CC-E-1C	Emission units for MS68	ME (Mist eliminators)

Provide a description of the emission unit (type, method of operation, design parameters, etc.):
Emission units 1-CC-E-1A; 1-CC-E-1B; 1-CC-E-1C are the Induced draft unit 1 Cooling Tower for the component cooling water system located on the hill southwest of unit 3.

Manufacturer:	**Model number:**	**Serial number:**
N/A	N/A	N/A
Construction date:	**Installation date:**	**Modification date(s):**
1964	1964	N/A

Design Capacity (examples: furnaces - tons/hr, tanks - gallons):
Induced draft fans with 20/5 HP 480/3/60 two speed fan motors with reduction gears.

Maximum Hourly Throughput:	**Maximum Annual Throughput:**	**Maximum Operating Schedule:**
N/A	N/A	8,760 hours

Fuel Usage Data **(fill out all applicable fields)**

Does this emission unit combust fuel? ___Yes _X_ No	**If yes, is it?** ___ Indirect Fired ___Direct Fired
Maximum design heat input and/or maximum horsepower rating: N/A	**Type and Btu/hr rating of burners:** N/A

List the primary fuel type(s) and if applicable, the secondary fuel type(s). For each fuel type listed, provide the maximum hourly and annual fuel usage for each.

N/A

Describe each fuel expected to be used during the term of the permit.

Fuel Type	Max. Sulfur Content	Max. Ash Content	BTU Value
N/A	N/A	N/A	N/A

Emissions Data		
Criteria Pollutants	Potential Emissions	
	PPH	TPY
Carbon Monoxide (CO)	N/A	N/A
Nitrogen Oxides (NO_X)	N/A	N/A
Lead (Pb)	N/A	N/A
Particulate Matter ($PM_{2.5}$)	N/A	N/A
Particulate Matter (PM_{10})	N/A	N/A
Total Particulate Matter (TSP)	N/A	N/A
Sulfur Dioxide (SO_2)	N/A	N/A
Volatile Organic Compounds (VOC)	N/A	N/A
Hazardous Air Pollutants	Potential Emissions	
	PPH	TPY
	N/A	N/A
Regulated Pollutants other than Criteria and HAP	Potential Emissions	
	PPH	TPY
	N/A	N/A

List the method(s) used to calculate the potential emissions (include dates of any stack tests conducted, versions of software used, source and dates of emission factors, etc.).

See Emission Calculations in Attachment I

Applicable Requirements

List all applicable requirements for this emission unit. For each applicable requirement, include the underlying rule/regulation citation and/or construction permit with the condition number. (*Note: Title V permit condition numbers alone are not the underlying applicable requirements*). If an emission limit is calculated based on the type of source and design capacity or if a standard is based on a design parameter, this information should also be included.

No emissions unit-specific applicable requirements for this source.

__X__ Permit Shield

For all applicable requirements listed above, provide monitoring/testing/recordkeeping/reporting which shall be used to demonstrate compliance. If the method is based on a permit or rule, include the condition number or citation. (Note: Each requirement listed above must have an associated method of demonstrating compliance. If there is not already a required method in place, then a method must be proposed.)

No emissions unit-specific applicable requirements for this source.

Are you in compliance with all applicable requirements for this emission unit? Yes

If no, complete the **Schedule of Compliance Form** as **ATTACHMENT F.**

ATTACHMENT E

SOURCES FOR EMISSION POINT MS69

UNIT 2 COOLING TOWER

(2-CC-E-1A, 2-CC-E-1B, 2-CC-E-1C)

ATTACHMENT E - Emission Unit Form

Emission Unit Description

Emission unit ID number:	**Emission unit name:**	**List any control devices associated with this emission unit:**
2-CC-E-1A 2-CC-E-1B 2-CC-E-1C	Sources for Emission Point MS69	ME (Mist eliminators)

Provide a description of the emission unit (type, method of operation, design parameters, etc.):
Emission units 2-CC-E-1A; 2-CC-E-1B; 2-CC-E-1C are the Induced draft unit 2 Cooling Tower for the component cooling water system located on the hill southwest of unit 3.

Manufacturer:	**Model number:**	**Serial number:**
N/A	N/A	N/A
Construction date:	**Installation date:**	**Modification date(s):**
1964	1964	N/A

Design Capacity (examples: furnaces - tons/hr, tanks - gallons):

Induced draft fans with 20/5 HP 480/3/60 two speed fan motors with reduction gears.

Maximum Hourly Throughput:	**Maximum Annual Throughput:**	**Maximum Operating Schedule:**
N/A	N/A	8,760 hours

Fuel Usage Data **(fill out all applicable fields)**

Does this emission unit combust fuel? ___Yes ___X No	**If yes, is it?** ___ Indirect Fired ___Direct Fired
Maximum design heat input and/or maximum horsepower rating: N/A	**Type and Btu/hr rating of burners:** N/A

List the primary fuel type(s) and if applicable, the secondary fuel type(s). For each fuel type listed, provide the maximum hourly and annual fuel usage for each.

N/A

Describe each fuel expected to be used during the term of the permit.

Fuel Type	Max. Sulfur Content	Max. Ash Content	BTU Value
N/A	N/A	N/A	N/A

Emissions Data		
Criteria Pollutants	Potential Emissions	
	PPH	TPY
Carbon Monoxide (CO)	N/A	N/A
Nitrogen Oxides (NO_X)	N/A	N/A
Lead (Pb)	N/A	N/A
Particulate Matter ($PM_{2.5}$)	N/A	N/A
Particulate Matter (PM_{10})	N/A	N/A
Total Particulate Matter (TSP)	N/A	N/A
Sulfur Dioxide (SO_2)	N/A	N/A
Volatile Organic Compounds (VOC)	N/A	N/A
Hazardous Air Pollutants	Potential Emissions	
	PPH	TPY
	N/A	N/A
Regulated Pollutants other than Criteria and HAP	Potential Emissions	
	PPH	TPY
	N/A	N/A

List the method(s) used to calculate the potential emissions (include dates of any stack tests conducted, versions of software used, source and dates of emission factors, etc.).

See Emission Calculations in Attachment I

Applicable Requirements

List all applicable requirements for this emission unit. For each applicable requirement, include the underlying rule/regulation citation and/or construction permit with the condition number. (*Note: Title V permit condition numbers alone are not the underlying applicable requirements*). If an emission limit is calculated based on the type of source and design capacity or if a standard is based on a design parameter, this information should also be included.

No emissions unit-specific applicable requirements for this source.

__X__ Permit Shield

For all applicable requirements listed above, provide monitoring/testing/recordkeeping/reporting which shall be used to demonstrate compliance. If the method is based on a permit or rule, include the condition number or citation. (Note: Each requirement listed above must have an associated method of demonstrating compliance. If there is not already a required method in place, then a method must be proposed.)

No emissions unit-specific applicable requirements for this source.

Are you in compliance with all applicable requirements for this emission unit? Yes

If no, complete the **Schedule of Compliance Form** as **ATTACHMENT F.**

ATTACHMENT E

SOURCES FOR EMISSION POINT MS70

UNIT 3 COOLING TOWER

(3-CC-E-1A, 3-CC-E-1B)

ATTACHMENT E - Emission Unit Form

Emission Unit Description

Emission unit ID number:	**Emission unit name:**	**List any control devices associated with this emission unit:**
3-CC-E-1A 3-CC-E-1B	Sources for Emission Point MS70	ME (Mist eliminators)

Provide a description of the emission unit (type, method of operation, design parameters, etc.):
Emission units 3-CC-E-1A; 3-CC-E-1B are Induced draft Unit 3 Cooling Tower for the component cooling water system located on the hill southwest of Unit 3.

Manufacturer:	**Model number:**	**Serial number:**
N/A	N/A	N/A
Construction date:	**Installation date:**	**Modification date(s):**
1973	1973	N/A

Design Capacity (examples: furnaces - tons/hr, tanks - gallons):

Two cell induced draft fans with 50 HP 480/3/60 two speed fan motors.

Maximum Hourly Throughput:	**Maximum Annual Throughput:**	**Maximum Operating Schedule:**
N/A	N/A	8,760 hours

Fuel Usage Data **(fill out all applicable fields)**

Does this emission unit combust fuel? ___Yes __X__ No	**If yes, is it?** ___ Indirect Fired ___Direct Fired
Maximum design heat input and/or maximum horsepower rating: N/A	**Type and Btu/hr rating of burners:** N/A

List the primary fuel type(s) and if applicable, the secondary fuel type(s). For each fuel type listed, provide the maximum hourly and annual fuel usage for each.

N/A

Describe each fuel expected to be used during the term of the permit.

Fuel Type	Max. Sulfur Content	Max. Ash Content	BTU Value
N/A	N/A	N/A	N/A

Emissions Data		
Criteria Pollutants	Potential Emissions	
	PPH	TPY
Carbon Monoxide (CO)	N/A	N/A
Nitrogen Oxides (NO_X)	N/A	N/A
Lead (Pb)	N/A	N/A
Particulate Matter ($PM_{2.5}$)	N/A	N/A
Particulate Matter (PM_{10})	N/A	N/A
Total Particulate Matter (TSP)	N/A	N/A
Sulfur Dioxide (SO_2)	N/A	N/A
Volatile Organic Compounds (VOC)	N/A	N/A
Hazardous Air Pollutants	Potential Emissions	
	PPH	TPY
	N/A	N/A
Regulated Pollutants other than Criteria and HAP	Potential Emissions	
	PPH	TPY
	N/A	N/A

List the method(s) used to calculate the potential emissions (include dates of any stack tests conducted, versions of software used, source and dates of emission factors, etc.).

See Emission Calculations in Attachment I

Applicable Requirements

List all applicable requirements for this emission unit. For each applicable requirement, include the underlying rule/regulation citation and/or construction permit with the condition number. (*Note: Title V permit condition numbers alone are not the underlying applicable requirements*). If an emission limit is calculated based on the type of source and design capacity or if a standard is based on a design parameter, this information should also be included.

No emissions unit-specific applicable requirements for this source.

_X_ Permit Shield

For all applicable requirements listed above, provide monitoring/testing/recordkeeping/reporting which shall be used to demonstrate compliance. If the method is based on a permit or rule, include the condition number or citation. (Note: Each requirement listed above must have an associated method of demonstrating compliance. If there is not already a required method in place, then a method must be proposed.)

No emissions unit-specific applicable requirements for this source.

Are you in compliance with all applicable requirements for this emission unit? Yes

If no, complete the **Schedule of Compliance Form** as **ATTACHMENT F**.

ATTACHMENT E

SOURCES FOR EMISSION POINT MS71

ACID TANK

(MTST-03-OAS-TK-1C)

ATTACHMENT E - Emission Unit Form

Emission Unit Description

Emission unit ID number:	**Emission unit name:**	**List any control devices associated with this emission unit:**
MTST-03-OAS-TK-1C	Emission unit for MS71	None

Provide a description of the emission unit (type, method of operation, design parameters, etc.):
Emission unit MTST-03-OAS-TK-1C is the acid tank containing dibasic acid for the scrubbers located on the east side of the dewatering building.

Manufacturer:	**Model number:**	**Serial number:**
Titan Fabricators Inc.	N/A	1644
Construction date:	**Installation date:**	**Modification date(s):**
1993	1993	N/A

Design Capacity (examples: furnaces - tons/hr, tanks - gallons):
43,183 gallons

Maximum Hourly Throughput:	**Maximum Annual Throughput:**	**Maximum Operating Schedule:**
N/A	N/A	8760 hours

Fuel Usage Data **(fill out all applicable fields)**

Does this emission unit combust fuel? ___Yes __X__ No	**If yes, is it?** ___ Indirect Fired ___Direct Fired
Maximum design heat input and/or maximum horsepower rating: N/A	**Type and Btu/hr rating of burners:** N/A

List the primary fuel type(s) and if applicable, the secondary fuel type(s). For each fuel type listed, provide the maximum hourly and annual fuel usage for each.
N/A

Describe each fuel expected to be used during the term of the permit.

Fuel Type	Max. Sulfur Content	Max. Ash Content	BTU Value
N/A	N/A	N/A	N/A

Emissions Data		
Criteria Pollutants	Potential Emissions	
	PPH	TPY
Carbon Monoxide (CO)	N/A	N/A
Nitrogen Oxides (NO_X)	N/A	N/A
Lead (Pb)	N/A	N/A
Particulate Matter ($PM_{2.5}$)	N/A	N/A
Particulate Matter (PM_{10})	N/A	N/A
Total Particulate Matter (TSP)	N/A	N/A
Sulfur Dioxide (SO_2)	N/A	N/A
Volatile Organic Compounds (VOC)	N/A	N/A
Hazardous Air Pollutants	Potential Emissions	
	PPH	TPY
	N/A	N/A
Regulated Pollutants other than Criteria and HAP	Potential Emissions	
	PPH	TPY
	N/A	N/A

List the method(s) used to calculate the potential emissions (include dates of any stack tests conducted, versions of software used, source and dates of emission factors, etc.).

See Emission Calculations in Attachment I

Applicable Requirements

List all applicable requirements for this emission unit. For each applicable requirement, include the underlying rule/regulation citation and/or construction permit with the condition number. (*Note: Title V permit condition numbers alone are not the underlying applicable requirements*). If an emission limit is calculated based on the type of source and design capacity or if a standard is based on a design parameter, this information should also be included.

No emissions unit-specific applicable requirements for this source.

__X__ Permit Shield

For all applicable requirements listed above, provide monitoring/testing/recordkeeping/reporting which shall be used to demonstrate compliance. If the method is based on a permit or rule, include the condition number or citation. (Note: Each requirement listed above must have an associated method of demonstrating compliance. If there is not already a required method in place, then a method must be proposed.)

No emissions unit-specific applicable requirements for this source.

Are you in compliance with all applicable requirements for this emission unit? Yes

If no, complete the **Schedule of Compliance Form** as **ATTACHMENT F.**

ATTACHMENT E

SOURCES FOR EMISSION POINT MS72

LIME SILO FOR WATER TREATMENT SETTLING POND

(MTST-00-BLD-LTB-1)

ATTACHMENT E - Emission Unit Form

Emission Unit Description

Emission unit ID number:	**Emission unit name:**	**List any control devices associated with this emission unit:**
MTST-00-BLD-LTB-1	Sources for Emission Point MS72	BH

Provide a description of the emission unit (type, method of operation, design parameters, etc.):
Emission unit MTST-00-BLD-LTB-1 is the hydrated lime silo for water treatment at the settling ponds

Manufacturer:	**Model number:**	**Serial number:**
N/A	N/A	N/A
Construction date:	**Installation date:**	**Modification date(s):**
1973	1973	2000

Design Capacity (examples: furnaces - tons/hr, tanks - gallons):
4000 cu. Ft.

Maximum Hourly Throughput:	**Maximum Annual Throughput:**	**Maximum Operating Schedule:**
N/A	N/A	8,760 hours

Fuel Usage Data **(fill out all applicable fields)**

Does this emission unit combust fuel? __Yes _X__ No	**If yes, is it?** ___ Indirect Fired __ Direct Fired
Maximum design heat input and/or maximum horsepower rating: N/A	**Type and Btu/hr rating of burners:** N/A

List the primary fuel type(s) and if applicable, the secondary fuel type(s). For each fuel type listed, provide the maximum hourly and annual fuel usage for each.

N/A

Describe each fuel expected to be used during the term of the permit.

Fuel Type	Max. Sulfur Content	Max. Ash Content	BTU Value
N/A	N/A	N/A	N/A

Emissions Data		
Criteria Pollutants	Potential Emissions	
	PPH	TPY
Carbon Monoxide (CO)	N/A	N/A
Nitrogen Oxides (NO_X)	N/A	N/A
Lead (Pb)	N/A	N/A
Particulate Matter ($PM_{2.5}$)	N/A	N/A
Particulate Matter (PM_{10})	N/A	N/A
Total Particulate Matter (TSP)	N/A	N/A
Sulfur Dioxide (SO_2)	N/A	N/A
Volatile Organic Compounds (VOC)	N/A	N/A
Hazardous Air Pollutants	Potential Emissions	
	PPH	TPY
	N/A	N/A
Regulated Pollutants other than Criteria and HAP	Potential Emissions	
	PPH	TPY
	N/A	N/A

List the method(s) used to calculate the potential emissions (include dates of any stack tests conducted, versions of software used, source and dates of emission factors, etc.).

See Emission Calculations in Attachment I

Applicable Requirements

List all applicable requirements for this emission unit. For each applicable requirement, include the underlying rule/regulation citation and/or construction permit with the condition number. (*Note: Title V permit condition numbers alone are not the underlying applicable requirements*). If an emission limit is calculated based on the type of source and design capacity or if a standard is based on a design parameter, this information should also be included.

No emissions unit-specific applicable requirements for this source.

__X__ Permit Shield

For all applicable requirements listed above, provide monitoring/testing/recordkeeping/reporting which shall be used to demonstrate compliance. If the method is based on a permit or rule, include the condition number or citation. (Note: Each requirement listed above must have an associated method of demonstrating compliance. If there is not already a required method in place, then a method must be proposed.)

No emissions unit-specific applicable requirements for this source.

Are you in compliance with all applicable requirements for this emission unit? Yes

If no, complete the **Schedule of Compliance Form** as **ATTACHMENT F.**

ATTACHMENT E

SOURCES FOR EMISSION POINT MS73, MS74 & MS75

ANHYDROUS AMMONIA TANKS

(MTST-00-AMS-TK1, MTST-00-AMS-TK2, MTST-00-AMS-TK3)

ATTACHMENT E - Emission Unit Form

Emission Unit Description

Emission unit ID number:	**Emission unit name:**	**List any control devices associated with this emission unit:**
MTST-00-AMS-TK1 MTST-00-AMS-TK2 MTST-00-AMS-TK3	Emission units for MS73, MS74, MS75	Deluge systems are used to suppress inadvertent ammonia releases

Provide a description of the emission unit (type, method of operation, design parameters, etc.):
Emission units MTST-00-AMS-TK1; MTST-00-AMS-TK2; MTST-00-AMS-TK3 are the horizontal Anhydrous Ammonia Tanks used for the SCR system

Manufacturer:	**Model number:**	**Serial number:**
ABCO Industries, INC.	N/A	70172A123
Construction date:	**Installation date:**	**Modification date(s):**
2001	2001	None

Design Capacity (examples: furnaces - tons/hr, tanks - gallons):
45,000 gallons each of anhydrous ammonia

Maximum Hourly Throughput:	**Maximum Annual Throughput:**	**Maximum Operating Schedule:**
N/A	N/A	8760 hours

Fuel Usage Data **(fill out all applicable fields)**

Does this emission unit combust fuel? ___Yes _X_ No	**If yes, is it?** ___ Indirect Fired ___Direct Fired
Maximum design heat input and/or maximum horsepower rating: N/A	**Type and Btu/hr rating of burners:** N/A

List the primary fuel type(s) and if applicable, the secondary fuel type(s). For each fuel type listed, provide the maximum hourly and annual fuel usage for each.

N/A

Describe each fuel expected to be used during the term of the permit.

Fuel Type	Max. Sulfur Content	Max. Ash Content	BTU Value
N/A	N/A	N/A	N/A

Emissions Data		
Criteria Pollutants	Potential Emissions	
	PPH	TPY
Carbon Monoxide (CO)	N/A	N/A
Nitrogen Oxides (NO_X)	N/A	N/A
Lead (Pb)	N/A	N/A
Particulate Matter ($PM_{2.5}$)	N/A	N/A
Particulate Matter (PM_{10})	N/A	N/A
Total Particulate Matter (TSP)	N/A	N/A
Sulfur Dioxide (SO_2)	N/A	N/A
Volatile Organic Compounds (VOC)	N/A	N/A
Hazardous Air Pollutants	Potential Emissions	
	PPH	TPY
	N/A	N/A
Regulated Pollutants other than Criteria and HAP	Potential Emissions	
	PPH	TPY
	N/A	N/A

List the method(s) used to calculate the potential emissions (include dates of any stack tests conducted, versions of software used, source and dates of emission factors, etc.).

See Emission Calculations in Attachment I

Applicable Requirements

List all applicable requirements for this emission unit. For each applicable requirement, include the underlying rule/regulation citation and/or construction permit with the condition number. (*Note: Title V permit condition numbers alone are not the underlying applicable requirements*). If an emission limit is calculated based on the type of source and design capacity or if a standard is based on a design parameter, this information should also be included.

No emissions unit-specific applicable requirements for this source.

_X_ Permit Shield

For all applicable requirements listed above, provide monitoring/testing/recordkeeping/reporting which shall be used to demonstrate compliance. If the method is based on a permit or rule, include the condition number or citation. (Note: Each requirement listed above must have an associated method of demonstrating compliance. If there is not already a required method in place, then a method must be proposed.)

No emissions unit-specific applicable requirements for this source.

Are you in compliance with all applicable requirements for this emission unit? Yes

If no, complete the **Schedule of Compliance Form** as **ATTACHMENT F.**

ATTACHMENT E

SOURCES FOR EMISSION POINT MS76

POLINO DIESEL FUEL TANK

(PTK-1)

ATTACHMENT E - Emission Unit Form

Emission Unit Description

Emission unit ID number:	**Emission unit name:**	**List any control devices associated with this emission unit:**
PTK-1	Emission unit for MS76	Full Enclosure

Provide a description of the emission unit (type, method of operation, design parameters, etc.):
Emission unit is Polino's off road diesel fuel tank (double walled)

Manufacturer:	**Model number:**	**Serial number:**
Steel Tank Institute	F912	F001142
Construction date:	**Installation date:**	**Modification date(s):**
2002	2002	None

Design Capacity (examples: furnaces - tons/hr, tanks - gallons):
12,000 gallon diesel fuel

Maximum Hourly Throughput:	**Maximum Annual Throughput:**	**Maximum Operating Schedule:**
N/A	N/A	2080 hours

Fuel Usage Data **(fill out all applicable fields)**

Does this emission unit combust fuel? ___Yes _X_ No	**If yes, is it?** ___ Indirect Fired ___Direct Fired
Maximum design heat input and/or maximum horsepower rating: N/A	**Type and Btu/hr rating of burners:** N/A

List the primary fuel type(s) and if applicable, the secondary fuel type(s). For each fuel type listed, provide the maximum hourly and annual fuel usage for each.
N/A

Describe each fuel expected to be used during the term of the permit.

Fuel Type	Max. Sulfur Content	Max. Ash Content	BTU Value
N/A	N/A	N/A	N/A

Emissions Data		
Criteria Pollutants	Potential Emissions	
	PPH	TPY
Carbon Monoxide (CO)	N/A	N/A
Nitrogen Oxides (NO_X)	N/A	N/A
Lead (Pb)	N/A	N/A
Particulate Matter ($PM_{2.5}$)	N/A	N/A
Particulate Matter (PM_{10})	N/A	N/A
Total Particulate Matter (TSP)	N/A	N/A
Sulfur Dioxide (SO_2)	N/A	N/A
Volatile Organic Compounds (VOC)	N/A	N/A
Hazardous Air Pollutants	Potential Emissions	
	PPH	TPY
	N/A	N/A
Regulated Pollutants other than Criteria and HAP	Potential Emissions	
	PPH	TPY
	N/A	N/A

List the method(s) used to calculate the potential emissions (include dates of any stack tests conducted, versions of software used, source and dates of emission factors, etc.).

See Emission Calculations in Attachment I

Applicable Requirements

List all applicable requirements for this emission unit. For each applicable requirement, include the underlying rule/regulation citation and/or construction permit with the condition number. (*Note: Title V permit condition numbers alone are not the underlying applicable requirements*). If an emission limit is calculated based on the type of source and design capacity or if a standard is based on a design parameter, this information should also be included.

No emissions unit-specific applicable requirements for this source.

__X__ Permit Shield

For all applicable requirements listed above, provide monitoring/testing/recordkeeping/reporting which shall be used to demonstrate compliance. If the method is based on a permit or rule, include the condition number or citation. (Note: Each requirement listed above must have an associated method of demonstrating compliance. If there is not already a required method in place, then a method must be proposed.)

No emissions unit-specific applicable requirements for this source.

Are you in compliance with all applicable requirements for this emission unit? Yes

If no, complete the **Schedule of Compliance Form** as **ATTACHMENT F.**

ATTACHMENT E

SOURCES FOR EMISSION POINT RD-1, RD-2, RD-3, RD-4, RD-5 and RD-6

Paved Roads

ATTACHMENT E - Emission Unit Form

Emission Unit Description	*Paved Roads*	
Emission unit ID number: RD-1 RD-2 RD-3 RD-4 RD-5 RD-6	**Emission unit name:** Asphalt Plant Entrance Road (RD-1) Concrete Coal Entrance Road (RD-2) Asphalt Limestone Haul Road (RD-3) Asphalt Mettiki Coal Entrance Haul Road (RD-4) Asphalt Ash Haul Road (RD-5) Asphalt Plant Roads (RD-6)	**List any control devices associated with this emission unit:** P, PWT (RD-1 through RD-6)

Provide a description of the emission unit (type, method of operation, design parameters, etc.)

2216 ft Asphalt road. Main entrance into plant(RD-1); 1470 ft concrete road. Entrance road for coal deliveries (RD-2); 6277 ft Asphalt road. Entrance road for limestone deliveries (RD-3); 4932 ft Asphalt road. Entrance road for Mettiki coal deliveries (RD-4); 6864 ft Asphalt road. Ash haul road from plant to Closed Ash Mountain (RD-5); 10224 ft Asphalt roads. Internal plant roads (RD-6).

Manufacturer:	**Model number:**	**Serial number:**
N/A	N/A	N/A

Construction date:	**Installation date:**	**Modification date(s):**
1964 (RD-1) 1964 (RD-2) 1994 (RD-3) 1996 (RD-4) 1994 (RD-5) 1964 to 2004 (RD-6)	N/A	N/A

Design Capacity (examples: furnaces - tons/hr, tanks - gallons):

2216 feet (RD-1)
1470 (RD-2)
6277 feet (RD-3)
4932 feet (RD-4)
6864 feet (RD-5)
10224 feet (RD-6)

Maximum Hourly Throughput:	**Maximum Annual Throughput:**	**Maximum Operating Schedule:**
N/A	N/A	8,760 HR/YR

Fuel Usage Data **(fill out all applicable fields)**

Does this emission unit combust fuel? ___Yes __X_ No	**If yes, is it?** **___ Indirect Fired ___Direct Fired**

Maximum design heat input and/or maximum horsepower rating: N/A	**Type and Btu/hr rating of burners:** N/A
List the primary fuel type(s) and if applicable, the secondary fuel type(s). For each fuel type listed, provide the maximum hourly and annual fuel usage for each. N/A	

Describe each fuel expected to be used during the term of the permit.

Fuel Type	Max. Sulfur Content	Max. Ash Content	BTU Value
N/A	N/A	N/A	N/A

Emissions Data		
Criteria Pollutants	Potential Emissions	
	PPH	TPY
Carbon Monoxide (CO)	N/A	N/A
Nitrogen Oxides (NO_X)	N/A	N/A
Lead (Pb)	N/A	N/A
Particulate Matter ($PM_{2.5}$)	N/A	N/A
Particulate Matter (PM_{10})	5.87	25.69
Total Particulate Matter (TSP)	30.07	131.69
Sulfur Dioxide (SO_2)	N/A	N/A
Volatile Organic Compounds (VOC)	N/A	N/A
Hazardous Air Pollutants	Potential Emissions	
	PPH	TPY
	N/A	N/A
Regulated Pollutants other than Criteria and HAP	Potential Emissions	
	PPH	TPY
	N/A	N/A

List the method(s) used to calculate the potential emissions (include dates of any stack tests conducted, versions of software used, source and dates of emission factors, etc.).

See Emission Calculations in Attachment I

Applicable Requirements

List all applicable requirements for this emission unit. For each applicable requirement, include the underlying rule/regulation citation and/or construction permit with the condition number. (*Note: Title V permit condition numbers alone are not the underlying applicable requirements*). If an emission limit is calculated based on the type of source and design capacity or if a standard is based on a design parameter, this information should also be included.

Fugitive Particulate Matter Control. No person shall cause, suffer, allow, or permit any source of fugitive particulate matter to operate that is not equipped with a fugitive particulate matter control system. This system shall be operated and maintained in such a manner as to minimize the emission of fugitive particulate matter. Sources of fugitive particulate matter associated with fuel burning units shall include, but not be limited to, the following:
a. Stockpiling of ash or fuel either in the open or in enclosures such as silos;
b. Transport of ash in vehicles or on conveying systems, to include spillage, tracking, or blowing of particulate matter from or by such vehicles or equipment; and
c. Ash or fuel handling systems and ash disposal areas.
[45CSR§2-5., 45CSR13, R13-2593 §4.1.6.]
(Title V permit condition 3.1.10)
(RD-1, RD-2, RD-4, RD-5, RD-6)

In accordance with Attachment E filed in Permit Application R13-1660C, the permittee shall maintain hard pavement on the whole length of the limestone haul road, 1.318 miles of the ash disposal haul road starting at the plant, and the ash-limestone haul road crossover. The pavement shall be repaired and maintained as necessary so as to keep the pavement in good condition
[45CSR13 - Permit No. R13-1660 §A.6.]
(Title V permit condition 6.1.6)
(RD-3, RD-5)

The following methods of dust minimization shall be utilized on all paved and unpaved haul roads as specified:
a. The unpaved portion of the ash haul road shall be treated with at least two (2) applications of calcium chloride during a minimum of the four (4) summer months (June, July, August, and September). Each application shall be, at a minimum, at least sixty (60) days apart.
b. The permittee shall maintain a water truck on site and in good operating condition, and shall utilize same to apply water, or a mixture of water and an environmentally acceptable dust control additive, hereinafter referred to as solution, as often as is necessary in order to minimize the atmospheric entrainment of fugitive particulate emissions that may be generated from paved and unpaved haul roads (including the coal haul road) and other work areas where mobile equipment is used.**(RD-3)**
The spray bar shall be equipped with commercially available spray nozzles, of sufficient size and number, so as to provide adequate coverage to the area being treated.
The pump delivering the water, or solution, shall be of sufficient size and capacity so as to be capable of delivering to the spray nozzles(s) an adequate quantity of water, or solution, and at a sufficient pressure, so as to assure that the treatment process will minimize the atmospheric entrainment of fugitive particulate emissions generated form the haul roads and work areas where mobile equipment is used.
c. The permittee shall use a high-pressure water stream on all paved haul roads as often as is necessary, but no less than once per calendar month, to clean the paved roads of entrained dirt and dust that would contribute significantly to particulate matter emissions. The high-pressure water stream shall be of sufficient strength to remove imbedded dirt and dust on the paved roads thereby lowering the dust loading of the paved roads. This requirement shall be waived during periods of prolonged sub-freezing weather. **(RD-3)**
[45CSR133 - Permit No. R13-1660 §A.7.]
(Title V permit condition 6.1.7)
(RD-3)

In accordance with the information filed in Permit Application R13-2034, the 0.600 mile haul road connecting State Route 93 to the Coal Truck Unloading Facility, as defined in Section 5.1.1., shall be paved. Fugitive emissions from the haul road to the Coal Truck Unloading Facility shall be controlled by utilization of a pressurized water truck as defined by Section 5.1.6.
[45CSR13, R13-2034, 4.1.2.]
(Title V permit condition 5.1.3)
(RD-4)

The permittee shall maintain a water truck on site and in good operating condition, and shall utilize same to apply water, or a mixture of water and an environmentally acceptable dust control additive, hereinafter referred to as solution, as often as is necessary in order to minimize the atmospheric entrainment of fugitive particulate emissions that may be generated from haulroads and other work areas where mobile equipment is used.
The spraybar shall be equipped with commercially available spray nozzles, of sufficient size and number, so as to provide adequate coverage to the area being treated.
The pump delivering the water, or solution, shall be of sufficient size and capacity so as to be capable of delivering to the spray nozzle(s) an adequate quantity of water, or solution, and at a sufficient pressure, so as to assure that the treatment process will minimize the atmospheric entrainment of fugitive particulate emissions generated from the haulroads and work areas where mobile equipment is used.
[45CSR13, R13-2034, 4.1.5.]
(Title V permit condition 5.1.6)
(RD-4, RD-5, RD-6)

In accordance with the information filed in Permit Application R13-2034, the facility shall pave an additional 0.568 miles of the Ash Haulroad, resulting in a total of 1.168 miles of paved Ash Haul road and 0.497 miles of unpaved Ash Haulroad. Fugitive emissions from the Ash Haulroad shall be controlled by utilization of a pressurized water truck as defined by Section 5.1.6.
[45CSR13, R13-2034, 4.1.3.]
(Title V permit condition 5.1.4)
(RD-5)

In accordance with the information filed in Permit Application R13-2034, the facility shall pave an additional 0.0644 miles of the FGD By-Product Disposal Route, resulting in a total FGD By-Product Disposal Route of 0.9000 miles of paved road and no unpaved road. Fugitive emissions from the FGD By-Product Disposal Route shall be controlled by utilization of a pressurized water truck as defined by Section 5.1.6.
[45CSR13, R13-2034, 4.1.4.]
(Title V permit condition 5.1.5)
(RD-5, RD-6)

The following methods of dust minimization shall be utilized on all paved and unpaved haul roads as specified:
a. The unpaved portion of the ash haul road shall be treated with at least two (2) applications of calcium chloride during a minimum of the four (4) summer months (June, July, August, and September). Each application shall be, at a minimum, at least sixty (60) days apart.
b. The permittee shall maintain a water truck on site and in good operating condition, and shall utilize same to apply water, or a mixture of water and an environmentally acceptable dust control additive, hereinafter referred to as solution, as often as is necessary in order to minimize the atmospheric entrainment of fugitive particulate emissions that may be generated from paved and unpaved haul roads (including the coal haul road) and other work areas where mobile equipment is used.
The spray bar shall be equipped with commercially available spray nozzles, of sufficient size and number, so as to provide adequate coverage to the area being treated.
The pump delivering the water, or solution, shall be of sufficient size and capacity so as to be capable of delivering to the spray nozzles(s) an adequate quantity of water, or solution, and at a sufficient pressure, so as to assure that the treatment process will minimize the atmospheric entrainment of fugitive particulate emissions generated form the haul roads and work areas where mobile equipment is used.**(RD-5)**
c. The permittee shall use a high-pressure water stream on all paved haul roads as often as is necessary, but no less than once per calendar month, to clean the paved roads of entrained dirt and dust that would contribute significantly to particulate matter emissions. The high-pressure water stream shall be of sufficient strength to remove imbedded dirt and dust on the paved roads thereby lowering the dust loading

of the paved roads. This requirement shall be waived during periods of prolonged sub-freezing weather.**(RD-5)**
[45CSR133 - Permit No. R13-1660 §A.7.]
(Title V permit condition 6.1.7)
(RD-5)

__X__ Permit Shield

For all applicable requirements listed above, provide monitoring/testing/recordkeeping/reporting which shall be used to demonstrate compliance. If the method is based on a permit or rule, include the condition number or citation. (Note: Each requirement listed above must have an associated method of demonstrating compliance. If there is not already a required method in place, then a method must be proposed.)

The permittee shall maintain records indicating the use of any dust suppressants or any other suitable dust control measures applied at the facility. The permittee shall also inspect all fugitive dust control systems weekly from May 1 through September 30 and monthly from October 1 through April 30 to ensure that they are operated and maintained in conformance with their designs. The permittee shall maintain records of all scheduled and non-scheduled maintenance and shall state any maintenance or corrective actions taken as a result of the weekly and/or monthly inspections, the times the fugitive dust control system(s) were inoperable and any corrective actions taken.
[45CSR§30-5.1.c.]
(Title V permit condition 3.4.4)
(RD-1, RD-2 RD-3, RD-4, RD-5, RD-6)

For the purposes of determining compliance with maximum throughput limits set forth in conditions 6.1.3., 6.1.4., and 6.1.5. the applicant shall maintain monthly records of the throughputs of the specified materials. For the purposes of determining compliance with the water truck requirement in condition 6.1.7., the applicant shall maintain a daily and monthly record of water truck usage. Such records shall be retained by the permittee for at least five (5) years. Certified records shall be made available to the Director or his/her duly authorized representative upon request.
[45CSR13 - Permit No. R13-1660 §B.7.]
(Title V permit condition 6.4.2)
(RD-3, RD-5)

Are you in compliance with all applicable requirements for this emission unit? Yes

If no, complete the **Schedule of Compliance Form** as **ATTACHMENT F**.

ATTACHMENT E

SOURCES FOR EMISSION POINT RD-7, RD-8, RD-9, RD-10, and RD-11

Unpaved Roads

ATTACHMENT E - Emission Unit Form

Emission Unit Description	*Unpaved Roads*	
Emission unit ID number: RD-7 RD-8 RD-9 RD-10 RD-11	**Emission unit name:** Gravel Plant Roads (RD-7) Gravel Ash Haul Road to Phase A (RD-8) Gravel Ash Haul Road to Phase B Entrance (RD-9) Bottom Ash Internal Phase B Haul Road (RD-10) Gravel Old Ash Haul Road (RD-11)	**List any control devices associated with this emission unit:** PWT (RD-7 through RD-11)

Provide a description of the emission unit (type, method of operation, design parameters, etc.)

3518 ft Gravel roads. Internal plant roads (RD-7)

3168 Gravel roads. Access road from main paved ash haul road to the Phase A FGD disposal area (RD-8)

4224 ft Gravel roads. Ash haul road from paved ash haul road to the entrance of Phase B ash disposal area (RD-9)

2112 ft Bottom Ash roads. Internal Phase B access road for ash placement (RD-10)

3325 ft Gravel roads. Old ash haul road from lower paved ash haul road to the old Buffalo shop area (RD-11)

Manufacturer: N/A	**Model number:** N/A	**Serial number:** N/A
Construction date: 1964 to 1972 (RD-7) 1994 (RD-8) 1986 (RD-9) 1995 to 2009 (RD-10) 1979 (RD-11)	**Installation date:** N/A	**Modification date(s):** N/A

Design Capacity (examples: furnaces - tons/hr, tanks - gallons):

3518 feet (RD-7)

3168 feet (RD-8)

4224 feet (RD-9)

2112 feet (RD-10)

3325 feet (RD-11)

Maximum Hourly Throughput:	**Maximum Annual Throughput:**	**Maximum Operating Schedule:**
N/A	N/A	8,760 HR/YR

Fuel Usage Data **(fill out all applicable fields)**

Does this emission unit combust fuel? ___Yes __X_ No	**If yes, is it?** **___ Indirect Fired ___Direct Fired**

Maximum design heat input and/or maximum horsepower rating: N/A	Type and Btu/hr rating of burners: N/A

List the primary fuel type(s) and if applicable, the secondary fuel type(s). For each fuel type listed, provide the maximum hourly and annual fuel usage for each.
N/A

Describe each fuel expected to be used during the term of the permit.

Fuel Type	Max. Sulfur Content	Max. Ash Content	BTU Value
N/A	N/A	N/A	N/A

Emissions Data		
Criteria Pollutants	Potential Emissions	
	PPH	TPY
Carbon Monoxide (CO)	N/A	N/A
Nitrogen Oxides (NO_X)	N/A	N/A
Lead (Pb)	N/A	N/A
Particulate Matter ($PM_{2.5}$)	N/A	N/A
Particulate Matter (PM_{10})	1.33	5.83
Total Particulate Matter (TSP)	4.67	20.44
Sulfur Dioxide (SO_2)	N/A	N/A
Volatile Organic Compounds (VOC)	N/A	N/A
Hazardous Air Pollutants	Potential Emissions	
	PPH	TPY
	N/A	N/A
Regulated Pollutants other than Criteria and HAP	Potential Emissions	
	PPH	TPY
	N/A	N/A

List the method(s) used to calculate the potential emissions (include dates of any stack tests conducted, versions of software used, source and dates of emission factors, etc.).

See Emission Calculations in Attachment I

Applicable Requirements

List all applicable requirements for this emission unit. For each applicable requirement, include the underlying rule/regulation citation and/or construction permit with the condition number. (*Note: Title V permit condition numbers alone are not the underlying applicable requirements*). If an emission limit is calculated based on the type of source and design capacity or if a standard is based on a design parameter, this information should also be included.

Fugitive Particulate Matter Control. No person shall cause, suffer, allow, or permit any source of fugitive particulate matter to operate that is not equipped with a fugitive particulate matter control system. This system shall be operated and maintained in such a manner as to minimize the emission of fugitive particulate matter. Sources of fugitive particulate matter associated with fuel burning units shall include, but not be limited to, the following:
a. Stockpiling of ash or fuel either in the open or in enclosures such as silos;
b. Transport of ash in vehicles or on conveying systems, to include spillage, tracking, or blowing of particulate matter from or by such vehicles or equipment; and
c. Ash or fuel handling systems and ash disposal areas.
[45CSR§2-5., 45CSR13, R13-2593 §4.1.6.]
(Title V permit condition 3.1.10)
(RD-7, RD-8, RD-9, RD-10, RD-11)

In accordance with the information filed in Permit Application R13-2034, the facility shall pave an additional 0.568 miles of the Ash Haulroad, resulting in a total of 1.168 miles of paved Ash Haul road and 0.497 miles of unpaved Ash Haulroad. Fugitive emissions from the Ash Haulroad shall be controlled by utilization of a pressurized water truck as defined by Section 5.1.6.
[45CSR13, R13-2034, 4.1.3.]
(Title V permit condition 5.1.4)
(RD-9)

The permittee shall maintain a water truck on site and in good operating condition, and shall utilize same to apply water, or a mixture of water and an environmentally acceptable dust control additive, hereinafter referred to as solution, as often as is necessary in order to minimize the atmospheric entrainment of fugitive particulate emissions that may be generated from haulroads and other work areas where mobile equipment is used.
The spraybar shall be equipped with commercially available spray nozzles, of sufficient size and number, so as to provide adequate coverage to the area being treated.
The pump delivering the water, or solution, shall be of sufficient size and capacity so as to be capable of delivering to the spray nozzle(s) an adequate quantity of water, or solution, and at a sufficient pressure, so as to assure that the treatment process will minimize the atmospheric entrainment of fugitive particulate emissions generated from the haulroads and work areas where mobile equipment is used.
[45CSR13, R13-2034, 4.1.5.]
(Title V permit condition 5.1.6)
(RD-9)

The following methods of dust minimization shall be utilized on all paved and unpaved haul roads as specified:
a. The unpaved portion of the ash haul road shall be treated with at least two (2) applications of calcium chloride during a minimum of the four (4) summer months (June, July, August, and September). Each application shall be, at a minimum, at least sixty (60) days apart.**(RD-9)**
b. The permittee shall maintain a water truck on site and in good operating condition, and shall utilize same to apply water, or a mixture of water and an environmentally acceptable dust control additive, hereinafter referred to as solution, as often as is necessary in order to minimize the atmospheric entrainment of fugitive particulate emissions that may be generated from paved and unpaved haul roads (including the coal haul road) and other work areas where mobile equipment is used.
The spray bar shall be equipped with commercially available spray nozzles, of sufficient size and number, so as to provide adequate coverage to the area being treated.
The pump delivering the water, or solution, shall be of sufficient size and capacity so as to be capable of delivering to the spray nozzles(s) an adequate quantity of water, or solution, and at a sufficient pressure, so as to assure that the treatment process will minimize the atmospheric entrainment of fugitive particulate emissions generated form the haul roads and work areas where mobile equipment is used.**(RD-9)**
c. The permittee shall use a high-pressure water stream on all paved haul roads as often as is necessary, but no less than once per calendar month, to clean the paved roads of entrained dirt and dust that would contribute significantly to particulate matter emissions. The high-pressure water stream shall be of sufficient strength to remove imbedded dirt and dust on the paved roads thereby lowering the dust loading of the paved roads. This requirement shall be waived during periods of prolonged sub-freezing weather.
[45CSR133 - Permit No. R13-1660 §A.7.]
(Title V permit condition 6.1.7)
(RD-9, RD-10)

_X___ Permit Shield

For all applicable requirements listed above, provide monitoring/testing/recordkeeping/reporting which shall be used to demonstrate compliance. If the method is based on a permit or rule, include the condition number or citation. (Note: Each requirement listed above must have an associated method of demonstrating compliance. If there is not already a required method in place, then a method must be proposed.)

The permittee shall maintain records indicating the use of any dust suppressants or any other suitable dust control measures applied at the facility. The permittee shall also inspect all fugitive dust control systems weekly from May 1 through September 30 and monthly from October 1 through April 30 to ensure that they are operated and maintained in conformance with their designs. The permittee shall maintain records of all scheduled and non-scheduled maintenance and shall state any maintenance or corrective actions taken as a result of the weekly and/or monthly inspections, the times the fugitive dust control system(s) were inoperable and any corrective actions taken.
[45CSR§30-5.1.c.]
(Title V permit condition 3.4.4)
(RD-7, RD-8, RD-9, RD-10, RD-11)

For the purposes of determining compliance with maximum throughput limits set forth in conditions 6.1.3., 6.1.4., and 6.1.5. the applicant shall maintain monthly records of the throughputs of the specified materials. For the purposes of determining compliance with the water truck requirement in condition 6.1.7., the applicant shall maintain a daily and monthly record of water truck usage. Such records shall be retained by the permittee for at least five (5) years. Certified records shall be made available to the Director or his/her duly authorized representative upon request.
[45CSR13 - Permit No. R13-1660 §B.7.]
(Title V permit condition 6.4.2)
(RD-9, RD-10)

Are you in compliance with all applicable requirements for this emission unit? Yes

If no, complete the **Schedule of Compliance Form** as **ATTACHMENT F.**

ATTACHMENT E

SOURCES FOR EMISSION POINT AD1

UNLOADING OF ASH HAUL TRUCKS

ATTACHMENT E - Emission Unit Form

Emission Unit Description

Emission unit ID number:	**Emission unit name:**	**List any control devices associated with this emission unit:**
AD-1	Unloading of ash haul trucks	MC

Provide a description of the emission unit (type, method of operation, design parameters, etc.)

Fly ash, bottom ash, and pyrites are unloaded at the ash landfill via trucks.

Manufacturer:	**Model number:**	**Serial number:**
N/A	N/A	N/A
Construction date:	**Installation date:**	**Modification date(s):**
1989	N/A	N/A

Design Capacity (examples: furnaces - tons/hr, tanks - gallons):

Five of the trucks have a design capacity of 60 tons and two trucks have a 40 ton capacity.

Maximum Hourly Throughput:	**Maximum Annual Throughput:**	**Maximum Operating Schedule:**
N/A	N/A	8,760 HR/YR

Fuel Usage Data **(fill out all applicable fields)**

Does this emission unit combust fuel? ___Yes __X_ No	**If yes, is it?** ___ **Indirect Fired** ___**Direct Fired**
Maximum design heat input and/or maximum horsepower rating: N/A	**Type and Btu/hr rating of burners:** N/A

List the primary fuel type(s) and if applicable, the secondary fuel type(s). For each fuel type listed, provide the maximum hourly and annual fuel usage for each.

N/A

Describe each fuel expected to be used during the term of the permit.

Fuel Type	Max. Sulfur Content	Max. Ash Content	BTU Value
N/A	N/A	N/A	N/A

Emissions Data		
Criteria Pollutants	Potential Emissions	
	PPH	TPY
Carbon Monoxide (CO)	N/A	N/A
Nitrogen Oxides (NO_X)	N/A	N/A
Lead (Pb)	N/A	N/A
Particulate Matter ($PM_{2.5}$)	N/A	N/A
Particulate Matter (PM_{10})	2.46E-04	1.08E-03
Total Particulate Matter (TSP)	5.21E-04	2.28E-03
Sulfur Dioxide (SO_2)	N/A	N/A
Volatile Organic Compounds (VOC)	N/A	N/A
Hazardous Air Pollutants	Potential Emissions	
	PPH	TPY
	N/A	N/A
Regulated Pollutants other than Criteria and HAP	Potential Emissions	
	PPH	TPY
	N/A	N/A

List the method(s) used to calculate the potential emissions (include dates of any stack tests conducted, versions of software used, source and dates of emission factors, etc.).

See Emission Calculations in Attachment I

Applicable Requirements

List all applicable requirements for this emission unit. For each applicable requirement, include the underlying rule/regulation citation and/or construction permit with the condition number. (Note: Title V permit condition numbers alone are not the underlying applicable requirements). If an emission limit is calculated based on the type of source and design capacity or if a standard is based on a design parameter, this information should also be included.

Fugitive Particulate Matter Control. No person shall cause, suffer, allow, or permit any source of fugitive particulate matter to operate that is not equipped with a fugitive particulate matter control system. This system shall be operated and maintained in such a manner as to minimize the emission of fugitive particulate matter. Sources of fugitive particulate matter associated with fuel burning units shall include, but not be limited to, the following:

a. Stockpiling of ash or fuel either in the open or in enclosures such as silos;
b. Transport of ash in vehicles or on conveying systems, to include spillage, tracking, or blowing of particulate matter from or by such vehicles or equipment; and
c. Ash or fuel handling systems and ash disposal areas.

[45CSR§2-5., 45CSR13, R13-2593 §4.1.6.]

(Title V permit condition 3.1.10)

X Permit Shield

For all applicable requirements listed above, provide monitoring/testing/recordkeeping/reporting which shall be used to demonstrate compliance. If the method is based on a permit or rule, include the condition number or citation. (Note: Each requirement listed above must have an associated method of demonstrating compliance. If there is not already a required method in place, then a method must be proposed.)

There are no associated monitoring/testing/recordkeeping/reporting requirements associated with this emissions unit.

Are you in compliance with all applicable requirements for this emission unit? Yes

If no, complete the Schedule of Compliance Form as ATTACHMENT F.

ATTACHMENT E

SOURCES FOR EMISSION POINT FGD-1

UNLOADING OF FGD BYPRODUCT HAUL TRUCKS

ATTACHMENT E - Emission Unit Form

Emission Unit Description

Emission unit ID number:	**Emission unit name:**	**List any control devices associated with this emission unit:**
FGD-1	Unloading of FGD byproduct haul trucks	MC

Provide a description of the emission unit (type, method of operation, design parameters, etc.)

FGD byproduct is unloaded at the FGD landfill via trucks.

Manufacturer:	**Model number:**	**Serial number:**
N/A	N/A	N/A
Construction date:	**Installation date:**	**Modification date(s):**
1994	N/A	N/A

Design Capacity (examples: furnaces - tons/hr, tanks - gallons):

Truck capacity is 35 ton/load

Maximum Hourly Throughput:	**Maximum Annual Throughput:**	**Maximum Operating Schedule:**
N/A	N/A	8,760 HR/YR

Fuel Usage Data **(fill out all applicable fields)**

Does this emission unit combust fuel? ___Yes __X_ No	**If yes, is it?** ___ **Indirect Fired** ___**Direct Fired**
Maximum design heat input and/or maximum horsepower rating: N/A	**Type and Btu/hr rating of burners:** N/A

List the primary fuel type(s) and if applicable, the secondary fuel type(s). For each fuel type listed, provide the maximum hourly and annual fuel usage for each.

N/A

Describe each fuel expected to be used during the term of the permit.

Fuel Type	Max. Sulfur Content	Max. Ash Content	BTU Value
N/A	N/A	N/A	N/A

Emissions Data		
Criteria Pollutants	Potential Emissions	
	PPH	TPY
Carbon Monoxide (CO)	N/A	N/A
Nitrogen Oxides (NO_X)	N/A	N/A
Lead (Pb)	N/A	N/A
Particulate Matter ($PM_{2.5}$)	N/A	N/A
Particulate Matter (PM_{10})	2.22E-05	9.71E-05
Total Particulate Matter (TSP)	4.69E-05	2.05E-04
Sulfur Dioxide (SO_2)	N/A	N/A
Volatile Organic Compounds (VOC)	N/A	N/A
Hazardous Air Pollutants	Potential Emissions	
	PPH	TPY
	N/A	N/A
Regulated Pollutants other than Criteria and HAP	Potential Emissions	
	PPH	TPY
	N/A	N/A

List the method(s) used to calculate the potential emissions (include dates of any stack tests conducted, versions of software used, source and dates of emission factors, etc.).

See Emission Calculations in Attachment I

Applicable Requirements

List all applicable requirements for this emission unit. For each applicable requirement, include the underlying rule/regulation citation and/or construction permit with the condition number. (Note: Title V permit condition numbers alone are not the underlying applicable requirements). If an emission limit is calculated based on the type of source and design capacity or if a standard is based on a design parameter, this information should also be included.

Fugitive Particulate Matter Control. No person shall cause, suffer, allow, or permit any source of fugitive particulate matter to operate that is not equipped with a fugitive particulate matter control system. This system shall be operated and maintained in such a manner as to minimize the emission of fugitive particulate matter. Sources of fugitive particulate matter associated with fuel burning units shall include, but not be limited to, the following:
a. Stockpiling of ash or fuel either in the open or in enclosures such as silos;
b. Transport of ash in vehicles or on conveying systems, to include spillage, tracking, or blowing of particulate matter from or by such vehicles or equipment; and
c. Ash or fuel handling systems and ash disposal areas.

[45CSR§2-5., 45CSR13, R13-2593 §4.1.6.]

(Title V permit condition 3.1.10)

The maximum annual amount of FGD By-Product disposed of on or off-site shall not exceed 630,000 tons per year. Compliance with the processing limit shall be determined using a rolling yearly total.

[45CSR13 - Permit No. R13-1660 §A.5.]

(Title V permit condition 6.1.5)

FGD by-product shall be maintained at a sufficient moisture content so as to minimize fugitive particulate matter emissions prior to final deposition at the on-site landfill. FGD by-product loading operations that result in any visible particulate matter emissions shall be considered not to be minimized. Compliance with this condition shall be determined in accordance with 6.3.2. & 6.4.1.

[45CSR13 - Permit No. R13-1660 §A.10.]

(Title V permit condition 6.1.10)

X Permit Shield

For all applicable requirements listed above, provide monitoring/testing/recordkeeping/reporting which shall be used to demonstrate compliance. If the method is based on a permit or rule, include the condition number or citation. (Note: Each requirement listed above must have an associated method of demonstrating compliance. If there is not already a required method in place, then a method must be proposed.)

There are no applicable monitoring/testing/recordkeeping/reporting requirements associated with this emissions unit.

Are you in compliance with all applicable requirements for this emission unit? Yes

If no, complete the Schedule of Compliance Form as ATTACHMENT F.

TITLE V PERMIT RENEWAL APPLICATION
Mt. Storm Power Station
R30-02300003-2005

Table of Contents

Binder 2 of 3:

Section	Title	
6	Air Pollution Control Device Forms.....	Attachment G
7	Compliance Assurance Monitoring Plan Forms.....	Attachment H
8	Emission Calculations.....	Attachment I

ATTACHMENT G
AIR POLLUTION CONTROL DEVICE FORMS

ATTACHMENT G - Air Pollution Control Device Form

Control device ID number: MTST-ESP-01, MTST-ESP-02	**List all emission units associated with this control device.** MTST-01-BLR-STG-1 (Unit 1), MTST-02-BLR-STG-1 (Unit 2)	
Manufacturer: Research-Cottrell	**Model number:** Order No. 3096	**Installation date:** U1 – 1965; U2-1966

Type of Air Pollution Control Device:

___ Baghouse/Fabric Filter	___ Venturi Scrubber	___ Multiclone
___ Carbon Bed Adsorber	___ Packed Tower Scrubber	___ Single Cyclone
___ Carbon Drum(s)	___ Other Wet Scrubber	___ Cyclone Bank
___ Catalytic Incinerator	___ Condenser	___ Settling Chamber
___ Thermal Incinerator	___ Flare	___ Other (describe) _____
___ Wet Plate Electrostatic Precipitator		_X_ Dry Plate Electrostatic Precipitator

List the pollutants for which this device is intended to control and the capture and control efficiencies.

Pollutant	Capture Efficiency	Control Efficiency
Particulate Matter	100 %	> 99 %

Explain the characteristic design parameters of this control device (flow rates, pressure drops, number of bags, size, temperatures, etc.).
MTST-ESP-01 and MTST-ESP-02 is designed with a gas flow rate into the collector at 2,000,000 acfm at 285 degrees F. The gas velocity through the precipitator is 6.27 feet per second. There are 1,200 Opzel plate collecting electrodes with a vertical height of 30 feet and a total area of active collecting service of 637,200 ft^2. There are 14,160 Coppered Bessemer discharge electrodes with an effective length of each electrode of approx. 30 ft. The spacing between the collecting electrodes and the discharge electrodes is 0.375 feet. There are 720 Magnetic Impulse Gravity Impact collecting rappers and 80 Neundorfer rappers. This is a rapping plate cleaning system. There are 5 fields with 20 bus sections. There are 236 gas passages with a cross sectional area of 22.5 ft^2 per gas passage. The rectifiers are silicone controlled and there are 20 transformers.

Is this device subject to the CAM requirements of 40 C.F.R. 64? _X_ Yes __ No

If Yes, **Complete ATTACHMENT H**

If No, **Provide justification.**

Describe the parameters monitored and/or methods used to indicate performance of this control device.

Visible emission checks are performed monthly during periods of normal facility operation.

ATTACHMENT G - Air Pollution Control Device Form

Control device ID number: MTST-FGD-01, MTST-FGD-02	**List all emission units associated with this control device.** MTST-01-BLR-STG-1 (Unit 1), MTST-02-BLR-STG-1 (Unit 2)	
Manufacturer: Marsulex	**Model number:** Custom design	**Installation date:** **Unit 1 – 2002; Unit 2 - 2002**

Type of Air Pollution Control Device:

___ Baghouse/Fabric Filter	___ Venturi Scrubber	___ Multiclone
___ Carbon Bed Adsorber	___ Packed Tower Scrubber	___ Single Cyclone
___ Carbon Drum(s)	_X__ Other Wet Scrubber	___ Cyclone Bank
___ Catalytic Incinerator	___ Condenser	___ Settling Chamber
___ Thermal Incinerator	___ Flare	___ Other (describe) _____
___ Wet Plate Electrostatic Precipitator		__ Dry Plate Electrostatic Precipitator

List the pollutants for which this device is intended to control and the capture and control efficiencies.

Pollutant	Capture Efficiency	Control Efficiency
SO_2	100 %	> 99 %

Explain the characteristic design parameters of this control device (flow rates, pressure drops, number of bags, size, temperatures, etc.).

MTST-FGD-01 and MTST-FGD-02 are vertical spray towers with four(4) levels of spray. Exiting gases pass through two(2) levels of Chevron style mist eliminators made of FRP. The absorber vessels are constructed of reinforced concrete with ceramic tile liner. To overcome the increased pressure drop from the FGD's and the SCR's that were added later, each unit's induced draft fans(two per unit) were upgraded, with each fan powered by 7500 hp motors . The estimated gas pressure drop at maximum flow rate is 5.6 to 9.0 inches of water. The scrubbing liquor characteristics have a water weight of 84%, CaSO4 * H20 weight of 11%, CaCO3 weight of 1%, and inserts & dissolved solids weight of 4%. Limestone slurry is added to control pH. Water is added via mist eliminators sprays for level control. The system that recycles liquor through each absorber consists of four pumps rated at a combined 4150 hp , that take suction from the bottom of the absorber reaction tank and pump it to the overhead spray levels. Each recycle pump supplies 37,000 gpm for a total of 148,000 gpm per unit. The expected solid content of the liquor varies between 10% - 20%. The gas flow into the collector is 2,200,000 ACF at 285 F. The collection material disposal system is primarily dewatering by hydroclones. Secondary dewatering by rotary drum vacuum filter to 15% moisture. The majority of waste from the FGD system is transported to the mine for beneficial re-use. A very small portion may be land filled or sold.

Is this device subject to the CAM requirements of 40 C.F.R. 64? __ Yes _X_ No

If Yes, **Complete ATTACHMENT H**

If No, **Provide justification.** Emissions of SO_2 for Units 1 and 2 are required to be continuously monitored using a continuous emissions monitoring system (CEMS). This meets the CAM program definition of "continuous compliance determination method" found in §64.1. CEMs is used to continuously monitor SO_2 emissions, meaning that the exemption from CAM in §64.2(b) (vi) applies. Therefore, the CEMs is used in lieu of CAM, and CAM does not apply to the SO_2 emission limit.

Describe the parameters monitored and/or methods used to indicate performance of this control device.

Visible emission checks are performed monthly during periods of normal facility operation.

ATTACHMENT G - Air Pollution Control Device Form

Control device ID number: Selective Catalytic Reduction (SCR)	**List all emission units associated with this control device.** MTST-01-BLR-STG-1	
Manufacturer: Alstom Cormatech (catalyst)	**Model number:** U1 Contract #1422	**Installation date:** Unit 1: 2003

Type of Air Pollution Control Device:

___ Baghouse/Fabric Filter	___ Venturi Scrubber	___ Multiclone
___ Carbon Bed Adsorber	___ Packed Tower Scrubber	___ Single Cyclone
___ Carbon Drum(s)	___ Other Wet Scrubber	___ Cyclone Bank
___ Catalytic Incinerator	___ Condenser	___ Settling Chamber
___ Thermal Incinerator	___ Flare	_X_ Other (describe) Selective Catalytic Reduction (SCR)
___ Wet Plate Electrostatic Precipitator		_____ Dry Plate Electrostatic Precipitator

List the pollutants for which this device is intended to control and the capture and control efficiencies.

Pollutant	Capture Efficiency	Control Efficiency
NOx	99.8%	

Explain the characteristic design parameters of this control device (flow rates, pressure drops, number of bags, size, temperatures, etc.).

The selective catalytic reduction system (SCR) is a control technology in which nitrogen oxides (NOx) formed by the combustion process are removed by the injection of ammonia (NH3) into the flue gas. The SCR process reaction is most effective within a temperature window ranging from approximately 600 deg F to 775 deg F. Above 800 deg F the effect of catalytic sintering becomes prominent in lowering NOx reduction performance. Below 580 deg F the susceptibility of ammonium bisulfate (NH4HSOa) formation on catalyst surfaces increases.

Site Conditions	Units		
Elevation above sea level	feet	3,250	
Outside temperature	'F	-20 to +100	
Barometric pressure	in. Hg.	26.2	
Boiler Data	Units	(45% MCR)	(100% MCR)
Gross Generation rate	Mwe	255	563
Flue gas mass f low rate	lb/hr	2,647 ,000	5,767,000
Flue gas vol. f low rate	scfm*	573,000	1,246,000
Flue gas vol. flow rate	acfm	1,322,000	3,176,000
Flue gas temperature **	.F	600	700
NOx inlet	lb/N/MBtu	0.768	0.786
NOx inlet	ppmvd	528	528
NOx inlet	lb/h r	1 ,952	4337
Oxygen concentration	% vol. (dry)	4	4
H20 concentration	o/o vol.	8	8
SO2 concentration	ppmvd	1 ,628	1 ,628
SO3 concentration	ppmvd	17	17
Particulate concentration	lb/h r	28,900	64,100

Is this device subject to the CAM requirements of 40 C.F.R. 64? __ Yes _X_ No

If Yes, **Complete ATTACHMENT H**

If No, **Provide justification.**

Emissions of NOx for Unit 1 is required to be continuously monitored using a continuous emissions monitoring system (CEMS). This meets the CAM program definition of "continuous compliance determination method" found in §64.1. CEMs is used to continuously monitor NOx emissions, meaning that the exemption from CAM in §64.2(b) (vi) applies. Therefore, the CEMs is used in lieu of CAM, and CAM does not apply to the NOx emission limit.

Describe the parameters monitored and/or methods used to indicate performance of this control device.

Parameters associated with ammonia flow and NOx emissions are monitored.

ATTACHMENT G - Air Pollution Control Device Form

Control device ID number: Selective Catalytic Reduction (SCR)	**List all emission units associated with this control device.** MTST-02-BLR-STG-1	
Manufacturer: Alstom Cormatech (catalyst)	**Model number:** U2 Contract #1428	**Installation date:** Unit 2: 2003

Type of Air Pollution Control Device:

___ Baghouse/Fabric Filter	___ Venturi Scrubber	___ Multiclone
___ Carbon Bed Adsorber	___ Packed Tower Scrubber	___ Single Cyclone
___ Carbon Drum(s)	___ Other Wet Scrubber	___ Cyclone Bank
___ Catalytic Incinerator	___ Condenser	___ Settling Chamber
___ Thermal Incinerator	___ Flare	_X_ Other (describe) Selective Catalytic Reduction (SCR)
___ Wet Plate Electrostatic Precipitator		_____ Dry Plate Electrostatic Precipitator

List the pollutants for which this device is intended to control and the capture and control efficiencies.

Pollutant	Capture Efficiency	Control Efficiency
NOx	99.8%	

Explain the characteristic design parameters of this control device (flow rates, pressure drops, number of bags, size, temperatures, etc.).

The selective catalytic reduction system (SCR) is a control technology in which nitrogen oxides (NOx) formed by the combustion process are removed by the injection of ammonia (NH3) into the flue gas. The SCR process reaction is most effective within a temperature window ranging from approximately 600 deg F to 775 deg F. Above 800 deg F the effect of catalytic sintering becomes prominent in lowering NOx reduction performance. Below 580 deg F the susceptibility of ammonium bisulfate (NH4HSOa) formation on catalyst surfaces increases.

Site Conditions	Units		
Elevation above sea level	feet	3,250	
Outside temperature	'F	-20 to +100	
Barometric pressure	in. Hg.	26.2	
Boiler Data	Units	(45% MCR)	(100% MCR)
Gross Generation rate	Mwe	255	563
Flue gas mass f low rate	lb/hr	2,647 ,000	5,767,000
Flue gas vol. f low rate	scfm*	573,000	1,246,000
Flue gas vol. flow rate	acfm	1,322,000	3,176,000
Flue gas temperature **	.F	600	700
NOx inlet	lb/N/MBtu	0.768	0.786
NOx inlet	ppmvd	528	528
NOx inlet	lb/h r	1 ,952	4337
Oxygen concentration	% vol. (dry)	4	4
H20 concentration	o/o vol.	8	8
SO2 concentration	ppmvd	1 ,628	1 ,628
SO3 concentration	ppmvd	17	17
Particulate concentration	lb/h r	28,900	64,100

Is this device subject to the CAM requirements of 40 C.F.R. 64? __ Yes _X_ No

If Yes, **Complete ATTACHMENT H**

If No, **Provide justification.**

Emissions of NOx for Unit 2 is required to be continuously monitored using a continuous emissions monitoring system (CEMS). This meets the CAM program definition of "continuous compliance determination method" found in §64.1. CEMs is used to continuously monitor NOx emissions, meaning that the exemption from CAM in §64.2(b) (vi) applies. Therefore, the CEMs is used in lieu of CAM, and CAM does not apply to the NOx emission limit.

Describe the parameters monitored and/or methods used to indicate performance of this control device.

Parameters associated with ammonia flow and NOx emissions are monitored.

ATTACHMENT G - Air Pollution Control Device Form

Control device ID number: MTST-ESP-03	**List all emission units associated with this control device.** MTST-03-BLR-STG-1 (Unit 3)	
Manufacturer: Research-Cottrell	**Model number:** Order No. 3037	**Installation date:** 1973

Type of Air Pollution Control Device:

___ Baghouse/Fabric Filter	___ Venturi Scrubber	___ Multiclone
___ Carbon Bed Adsorber	___ Packed Tower Scrubber	___ Single Cyclone
___ Carbon Drum(s)	___ Other Wet Scrubber	___ Cyclone Bank
___ Catalytic Incinerator	___ Condenser	___ Settling Chamber
___ Thermal Incinerator	___ Flare	___ Other (describe) _____
___ Wet Plate Electrostatic Precipitator		_X_ Dry Plate Electrostatic Precipitator

List the pollutants for which this device is intended to control and the capture and control efficiencies.

Pollutant	Capture Efficiency	Control Efficiency
Particulate Matter	100 %	> 99 %

Explain the characteristic design parameters of this control device (flow rates, pressure drops, number of bags, size, temperatures, etc.).
MTST-ESP-03 is designed with a gas flow rate into the collector at 2,230,000 acfm at 285 degrees F. The gas velocity through the precipitator is 5.58 feet per second. There are 912 Opzel plate collecting electrodes with a vertical height of 30 feet and a total area of active collecting service of 579,520 ft^2. There are 10,656 Coppered Bessemer discharge electrodes with an effective length of each electrode of approx. 30 ft. The spacing between the collecting electrodes and the discharge electrodes is 0.375 feet. There are 384 Magnetic Impulse Gravity Impact collecting rappers and 80 Neundorfer wire frame rappers. This is a rapping plate cleaning system. There are 6 fields with 40 bus sections. There are 296 gas passages with a cross sectional area of 22.5 ft^2 per gas passage. The rectifiers are silicone controlled and there are 40 transformers.

Is this device subject to the CAM requirements of 40 C.F.R. 64? _X_ Yes ___ No

If Yes, **Complete ATTACHMENT H**

If No, **Provide justification.**

Describe the parameters monitored and/or methods used to indicate performance of this control device.

Visible emission checks are performed monthly during periods of normal facility operation.

ATTACHMENT G - Air Pollution Control Device Form

Control device ID number: MTST-FGD-03	**List all emission units associated with this control device.** MTST-03-BLR-STG-1 (Unit 3)	
Manufacturer: GEESI	**Model number:** Custom design	**Installation date:** 1995

Type of Air Pollution Control Device:

___ Baghouse/Fabric Filter	___ Venturi Scrubber	___ Multiclone
___ Carbon Bed Adsorber	___ Packed Tower Scrubber	___ Single Cyclone
___ Carbon Drum(s)	_X_ Other Wet Scrubber	___ Cyclone Bank
___ Catalytic Incinerator	___ Condenser	___ Settling Chamber
___ Thermal Incinerator	___ Flare	___ Other (describe) _____
___ Wet Plate Electrostatic Precipitator		__ Dry Plate Electrostatic Precipitator

List the pollutants for which this device is intended to control and the capture and control efficiencies.

Pollutant	Capture Efficiency	Control Efficiency
SO_2	100 %	> 99 %

Explain the characteristic design parameters of this control device (flow rates, pressure drops, number of bags, size, temperatures, etc.).

MTST-FGD-03 consists of two vertical spray towers(A & B), each with four(4) levels of spray; each vessel is sized for 50% of the total boiler gas flow. Exit gases pass through two levels of Chevron style mist eliminators made of FRP. The scrubber vessels are constructed of carbon steel shells with high nickel alloy lining (C-276). To overcome the increased pressure drop due to the scrubber a booster fan was added ahead of each vessel, each powered by a 3000 hp motor. The estimated gas pressure drop at maximum flow rate is approx. 4 inches of water. The scrubbing liquor characteristics have a water weight of 84%, CaSO4 * H20 weight of 11%, CaCO3 weight of 1%, and inserts & dissolved solids weight of 4%. Limestone slurry is added to control ph. Water is added via mist eliminator sprays for level control. The system used to recycle liquor through the absorbers, consists 8 recycle pumps (4 per vessel), each supplying approx. 27,000 gpmfor a total of about 216,000 gpm; the combined rating for the 8 pumps is 5200 hp.. The expected solid content of the liquor varies between 10% - 20%. The gas flow into the collector is 2,600,000 ACF at 285 F. The collection material disposal system is primarily dewatering by hydroclones. Secondary dewatering by rotary drum vacuum filter to 15% moisture. The majority of waste from the FGD system is transported to the mine for beneficial re-use. A very small portion may be land filled or sold.

Is this device subject to the CAM requirements of 40 C.F.R. 64? __ Yes _X_ No

If Yes, **Complete ATTACHMENT H**

If No, **Provide justification.** Emissions of SO_2 for Unit 3 is required to be continuously monitored using a continuous emissions monitoring system (CEMS). This meets the CAM program definition of "continuous compliance determination method" found in §64.1. CEMs is used to continuously monitor SO_2 emissions, meaning that the exemption from CAM in §64.2(b) (vi) applies. Therefore, the CEMs is used in lieu of CAM, and CAM does not apply to the SO_2 emission limit.

Describe the parameters monitored and/or methods used to indicate performance of this control device.

Visible emission checks are performed monthly during periods of normal facility operation.

ATTACHMENT G - Air Pollution Control Device Form

Control device ID number: Selective Catalytic Reduction (SCR)	**List all emission units associated with this control device.** MTST-03-BLR-STG-1	
Manufacturer: Alstom Cormatech (catalyst)	**Model number:** U3 Contract #1432	**Installation date:** Unit 3: 2004

Type of Air Pollution Control Device:

___ Baghouse/Fabric Filter	___ Venturi Scrubber	___ Multiclone
___ Carbon Bed Adsorber	___ Packed Tower Scrubber	___ Single Cyclone
___ Carbon Drum(s)	___ Other Wet Scrubber	___ Cyclone Bank
___ Catalytic Incinerator	___ Condenser	___ Settling Chamber
___ Thermal Incinerator	___ Flare	_X_ Other (describe) Selective Catalytic Reduction (SCR)
___ Wet Plate Electrostatic Precipitator		_____ Dry Plate Electrostatic Precipitator

List the pollutants for which this device is intended to control and the capture and control efficiencies.

Pollutant	Capture Efficiency	Control Efficiency
NOx	99.8%	

Explain the characteristic design parameters of this control device (flow rates, pressure drops, number of bags, size, temperatures, etc.).

The selective catalytic reduction system (SCR) is a control technology in which nitrogen oxides (NOx) formed by the combustion process are removed by the injection of ammonia (NH3) into the flue gas. The SCR process reaction is most effective within a temperature window ranging from approximately 600 deg F to 775 deg F. Above 800 deg F the effect of catalytic sintering becomes prominent in lowering NOx reduction performance. Below 580 deg F the susceptibility of ammonium bisulfate (NH4HSOa) formation on catalyst surfaces increases.

Site Conditions	Units		
Elevation above sea level	feet	3,250	
Outside temperature	'F	-20 to +100	
Barometric pressure	in. Hg.	26.2	
Boiler Data	Units	(45% MCR)	(100% MCR)
Gross Generation rate	Mwe	255	563
Flue gas mass f low rate	lb/hr	2,647 ,000	5,767,000
Flue gas vol. f low rate	scfm*	573,000	1,246,000
Flue gas vol. flow rate	acfm	1,322,000	3,176,000
Flue gas temperature **	.F	600	700
NOx inlet	lb/N/MBtu	0.768	0.786
NOx inlet	ppmvd	528	528
NOx inlet	lb/h r	1 ,952	4337
Oxygen concentration	% vol. (dry)	4	4
H20 concentration	o/o vol.	8	8
SO2 concentration	ppmvd	1 ,628	1 ,628
SO3 concentration	ppmvd	17	17
Particulate concentration	lb/h r	28,900	64,100

Is this device subject to the CAM requirements of 40 C.F.R. 64? __ Yes _X_ No

If Yes, **Complete ATTACHMENT H**

If No, **Provide justification.**

Emissions of NOx for Unit 3 is required to be continuously monitored using a continuous emissions monitoring system (CEMS). This meets the CAM program definition of "continuous compliance determination method" found in §64.1. CEMs is used to continuously monitor NOx emissions, meaning that the exemption from CAM in §64.2(b) (vi) applies. Therefore, the CEMs is used in lieu of CAM, and CAM does not apply to the NOx emission limit.

Describe the parameters monitored and/or methods used to indicate performance of this control device.

Parameters associated with ammonia flow and NOx emissions are monitored.

ATTACHMENT G - Air Pollution Control Device Form

Control device ID number: Dust Collector #3 (BH2ca)	**List all emission units associated with this control device.** MTST-00-BLD-LSUB-1; MTST-00-SAR-HPR-1A; MTST-00-SAR-HPR-1B; MTST-00-SAR-FDR-1A; MTST-00-SAR-FDR-1B	
Manufacturer: MAC Equipment Inc.	**Model number:** 144MCF572	**Installation date:** 1994

Type of Air Pollution Control Device:

_X_ Baghouse/Fabric Filter	___ Venturi Scrubber	___ Multiclone
___ Carbon Bed Adsorber	___ Packed Tower Scrubber	___ Single Cyclone
___ Carbon Drum(s)	___ Other Wet Scrubber	___ Cyclone Bank
___ Catalytic Incinerator	___ Condenser	___ Settling Chamber
___ Thermal Incinerator	___ Flare	___ Other (describe) _____
___ Wet Plate Electrostatic Precipitator		___ Dry Plate Electrostatic Precipitator

List the pollutants for which this device is intended to control and the capture and control efficiencies.

Pollutant	Capture Efficiency	Control Efficiency
Particulate Matter	99.8%	

Explain the characteristic design parameters of this control device (flow rates, pressure drops, number of bags, size, temperatures, etc.).

Air Volume = 65,593 CFM, Static Pressure = 12 in., Number of bags =572, Length of bags = 144 in.

Is this device subject to the CAM requirements of 40 C.F.R. 64? ___ Yes _X_ No

If Yes, **Complete ATTACHMENT H**

If No, **Provide justification.**

Dust Collector #3 (BH2ca) is not subject to CAM since the potential pre-controlled device emissions of the applicable regulated air pollutant is not equal to or greater than the Title V major Source Threshold Levels as indicated in 40 CFR Part 64.2 (a)(3).

Describe the parameters monitored and/or methods used to indicate performance of this control device.

Visible emission checks are performed monthly during periods of normal facility operation.

ATTACHMENT G - Air Pollution Control Device Form

Control device ID number: Dust Collector #4 (BH3cb)	**List all emission units associated with this control device.** MTST-00-CNV-A; MTST-00-SAR-SM-1; MTST-00-SAR-FDR-1; MTST-00-SAR-CRH-2; MTST-00-SAR-FDR-2; MTST-00-SAR-SM-2; MTST-00-SAR-CNV-D	
Manufacturer: MAC Equipment Inc.	**Model number:** 120CMCF88	**Installation date:** 1994

Type of Air Pollution Control Device:

_X_ Baghouse/Fabric Filter	___ Venturi Scrubber	___ Multiclone
___ Carbon Bed Adsorber	___ Packed Tower Scrubber	___ Single Cyclone
___ Carbon Drum(s)	___ Other Wet Scrubber	___ Cyclone Bank
___ Catalytic Incinerator	___ Condenser	___ Settling Chamber
___ Thermal Incinerator	___ Flare	___ Other (describe) _____
___ Wet Plate Electrostatic Precipitator		___ Dry Plate Electrostatic Precipitator

List the pollutants for which this device is intended to control and the capture and control efficiencies.

Pollutant	Capture Efficiency	Control Efficiency
Particulate Matter	99.8%	

Explain the characteristic design parameters of this control device (flow rates, pressure drops, number of bags, size, temperatures, etc.).

Air Flow = 7,200 CFM, Static Pressure = 12 in., Number of bags = 88, Length of bags = 120 in.

Is this device subject to the CAM requirements of 40 C.F.R. 64? ___ Yes _X_ No

If Yes, **Complete ATTACHMENT H**

If No, **Provide justification.**

Dust Collector #4 (BH3cb) is not subject to CAM since the potential pre-controlled device emissions of the applicable regulated air pollutant is not equal to or greater than the Title V major Source Threshold Levels as indicated in 40 CFR Part 64.2 (a)(3).

Describe the parameters monitored and/or methods used to indicate performance of this control device.

Visible emission checks are performed monthly during periods of normal facility operation.

ATTACHMENT G - Air Pollution Control Device Form

Control device ID number: Dust Collector #5 (BH7cc)	**List all emission units associated with this control device.** MTST-00-SAR-CRH-1; MTST-00-SAR-CNV-1	
Manufacturer: BENETECH	**Model number:** RA 10-192	**Installation date:** 2004

Type of Air Pollution Control Device:

_X_ Baghouse/Fabric Filter	___ Venturi Scrubber	___ Multiclone
___ Carbon Bed Adsorber	___ Packed Tower Scrubber	___ Single Cyclone
___ Carbon Drum(s)	___ Other Wet Scrubber	___ Cyclone Bank
___ Catalytic Incinerator	___ Condenser	___ Settling Chamber
___ Thermal Incinerator	___ Flare	___ Other (describe) _____
___ Wet Plate Electrostatic Precipitator		___ Dry Plate Electrostatic Precipitator

List the pollutants for which this device is intended to control and the capture and control efficiencies.

Pollutant	Capture Efficiency	Control Efficiency
Particulate Matter	99.8%	

Explain the characteristic design parameters of this control device (flow rates, pressure drops, number of bags, size, temperatures, etc.).

192 FILTERS, 10 FOOT LONG, 16 OUNCE SINGED POLYESTER FILTER BAGS

Is this device subject to the CAM requirements of 40 C.F.R. 64? ___ Yes _X_ No

If Yes, **Complete ATTACHMENT H**

If No, **Provide justification.**

Dust Collector #5 (BH7cc) is not subject to CAM since the potential pre-controlled device emissions of the applicable regulated air pollutant is not equal to or greater than the Title V major Source Threshold Levels as indicated in 40 CFR Part 64.2 (a)(3).

Describe the parameters monitored and/or methods used to indicate performance of this control device.

Visible emission checks are performed monthly during periods of normal facility operation.

ATTACHMENT G - Air Pollution Control Device Form

Control device ID number: Dust Collector #6 (BH6cc)	**List all emission units associated with this control device.** MTST-00-SAR-FDR-2A; MTST-00-SAR-FDR-2B; MTST-00-SAR-FDR-2C; MTST-00-SAR-CNV-B	
Manufacturer: MAC Equipment Inc.	**Model number:** 120CMCF88	**Installation date:** 1994

Type of Air Pollution Control Device:

_X_ Baghouse/Fabric Filter	___ Venturi Scrubber	___ Multiclone
___ Carbon Bed Adsorber	___ Packed Tower Scrubber	___ Single Cyclone
___ Carbon Drum(s)	___ Other Wet Scrubber	___ Cyclone Bank
___ Catalytic Incinerator	___ Condenser	___ Settling Chamber
___ Thermal Incinerator	___ Flare	___ Other (describe) _____
___ Wet Plate Electrostatic Precipitator		___ Dry Plate Electrostatic Precipitator

List the pollutants for which this device is intended to control and the capture and control efficiencies.

Pollutant	Capture Efficiency	Control Efficiency
Particulate Matter	99.8%	

Explain the characteristic design parameters of this control device (flow rates, pressure drops, number of bags, size, temperatures, etc.).

Air Flow = 7,200 CFM, Static Pressure = 12 in., Number of bags = 88, Length of bags = 120 in.

Is this device subject to the CAM requirements of 40 C.F.R. 64? ___ Yes _X_ No

If Yes, **Complete ATTACHMENT H**

If No, **Provide justification.** Dust Collector #6 (BH6cc) is not subject to CAM since the potential pre-controlled device emissions of the applicable regulated air pollutant is not equal to or greater than the Title V major Source Threshold Levels as indicated in 40 CFR Part 64.2 (a)(3).

Describe the parameters monitored and/or methods used to indicate performance of this control device.

Visible emission checks are performed monthly during periods of normal facility operation.

ATTACHMENT G - Air Pollution Control Device Form

Control device ID number: Dust Collector #7 (BH8ce)	**List all emission units associated with this control device.** MTST-00-SAR-CNV-1; MTST-03-SAR-TK-1A; MTST-03-SAR-TK-1B; MTST-00-SAR-TK-1A; MTST-00-SAR-TK-1B	
Manufacturer: Benetech	**Model number:** RA 12-192	**Installation date:** 2002

Type of Air Pollution Control Device:

_X_ Baghouse/Fabric Filter	___ Venturi Scrubber	___ Multiclone
___ Carbon Bed Adsorber	___ Packed Tower Scrubber	___ Single Cyclone
___ Carbon Drum(s)	___ Other Wet Scrubber	___ Cyclone Bank
___ Catalytic Incinerator	___ Condenser	___ Settling Chamber
___ Thermal Incinerator	___ Flare	___ Other (describe) _____
___ Wet Plate Electrostatic Precipitator		___ Dry Plate Electrostatic Precipitator

List the pollutants for which this device is intended to control and the capture and control efficiencies.

Pollutant	Capture Efficiency	Control Efficiency
Particulate Matter	99.8%	

Explain the characteristic design parameters of this control device (flow rates, pressure drops, number of bags, size, temperatures, etc.).

192 FILTERS, 12 FOOT LONG, 16 OUNCE SINGED POLYESTER FILTER BAGS

Is this device subject to the CAM requirements of 40 C.F.R. 64? ___ Yes _X_ No

If Yes, **Complete ATTACHMENT H**

If No, **Provide justification.**

Dust Collector #7 (BH8ce) is not subject to CAM since the potential pre-controlled device emissions of the applicable regulated air pollutant is not equal to or greater than the Title V major Source Threshold Levels as indicated in 40 CFR Part 64.2 (a)(3).

Describe the parameters monitored and/or methods used to indicate performance of this control device.

Visible emission checks are performed monthly during periods of normal facility operation.

ATTACHMENT G - Air Pollution Control Device Form

Control device ID number: Baghouse for lime silo for water treatment settling pond	**List all emission units associated with this control device.** MTST-00-BLD-LTB-1	
Manufacturer: Industrial Accessories Company	**Model number:** 40/60 Series	**Installation date:** 2004

Type of Air Pollution Control Device:

_X_ Baghouse/Fabric Filter	___ Venturi Scrubber	___ Multiclone
___ Carbon Bed Adsorber	___ Packed Tower Scrubber	___ Single Cyclone
___ Carbon Drum(s)	___ Other Wet Scrubber	___ Cyclone Bank
___ Catalytic Incinerator	___ Condenser	___ Settling Chamber
___ Thermal Incinerator	___ Flare	___ Other (describe) _____
___ Wet Plate Electrostatic Precipitator		___ Dry Plate Electrostatic Precipitator

List the pollutants for which this device is intended to control and the capture and control efficiencies.

Pollutant	Capture Efficiency	Control Efficiency
Particulate Matter	99.8%	

Explain the characteristic design parameters of this control device (flow rates, pressure drops, number of bags, size, temperatures, etc.).

Cleaning cycles of momentary blast of 90 to 100 psig compressed air.
Cycle time maintains 3" to 4" water column pressure across filter bags (16 bags)

Is this device subject to the CAM requirements of 40 C.F.R. 64? __ Yes _X_ No

If Yes, **Complete ATTACHMENT H**

If No, **Provide justification.**

The Baghouse for lime silo for water treatment settling pond is not subject to CAM since the potential pre-controlled device emissions of the applicable regulated air pollutant is not equal to or greater than the Title V major Source Threshold Levels as indicated in 40 CFR Part 64.2 (a)(3).

Describe the parameters monitored and/or methods used to indicate performance of this control device.

Visible emission checks are performed monthly during periods of normal facility operation.

ATTACHMENT G - Air Pollution Control Device Form

Control device ID number: Pyrite dust collector cyclone	**List all emission units associated with this control device.** MTST-00-ADB-TK-3	
Manufacturer: SWEMCO Inc.	**Model number:**	**Installation date:** 1982

Type of Air Pollution Control Device:

___ Baghouse/Fabric Filter	___ Venturi Scrubber	___ Multiclone
___ Carbon Bed Adsorber	___ Packed Tower Scrubber	___ Single Cyclone
___ Carbon Drum(s)	___ Other Wet Scrubber	_X_ Cyclone Bank
___ Catalytic Incinerator	___ Condenser	___ Settling Chamber
___ Thermal Incinerator	___ Flare	___ Other (describe) _____
___ Wet Plate Electrostatic Precipitator		___ Dry Plate Electrostatic Precipitator

List the pollutants for which this device is intended to control and the capture and control efficiencies.

Pollutant	Capture Efficiency	Control Efficiency
Particulate Matter	99.8%	

Explain the characteristic design parameters of this control device (flow rates, pressure drops, number of bags, size, temperatures, etc.).

The control device consists of 4 parallel trains of particulate separation collection; by design one for 3400 cfm, one for 6800 cfm, and two for 10,200 cfm. A train or combination of trains in service depends on the number of pyrite blowers in service.

Each train consists of a dry cyclone (with collected dust returned to the pyrite tank, MTST-00-ADB-TK-3), or wet venturi scrubber, and a wet cyclone; the particulate laden effluent is pumped to the settling basin.

Visible emission checks are performed monthly during periods of normal facility operation.

Is this device subject to the CAM requirements of 40 C.F.R. 64? __ Yes _X_ No

If Yes, **Complete ATTACHMENT H**

If No, **Provide justification.**

Pyrite dust collector cyclone are not subject to CAM since the potential pre-controlled device emissions of the applicable regulated air pollutant is not equal to or greater than the Title V major Source Threshold Levels as indicated in 40 CFR Part 64.2 (a)(3).

Describe the parameters monitored and/or methods used to indicate performance of this control device.

Visible emission checks are performed monthly during periods of normal facility operation.

ATTACHMENT H
COMPLIANCE ASSURANCE MONITORING PLAN FORMS

ATTACHMENT H - Compliance Assurance Monitoring (CAM) Plan Form

For definitions and information about the CAM rule, please refer to 40 CFR Part 64. Additional information (including guidance documents) may also be found at http://www.epa.gov/ttn/emc/cam.html

CAM APPLICABILITY DETERMINATION

1) Does the facility have a PSEU (Pollutant-Specific Emissions Unit considered separately with respect to **EACH** regulated air pollutant) that is subject to CAM (40 CFR Part 64), which must be addressed in this CAM plan submittal? To determine applicability, a PSEU must meet **all** of the following criteria (*If No, then the remainder of this form need not be completed*): ☒ YES ☐ NO

a. The PSEU is located at a major source that is required to obtain a Title V permit;

b. The PSEU is subject to an emission limitation or standard for the applicable regulated air pollutant that is NOT exempt;

LIST OF EXEMPT EMISSION LIMITATIONS OR STANDARDS:

- NSPS (40 CFR Part 60) or NESHAP (40 CFR Parts 61 and 63) proposed after 11/15/1990.
- Stratospheric Ozone Protection Requirements.
- Acid Rain Program Requirements.
- Emission Limitations or Standards for which a WVDEP Division of Air Quality Title V permit specifies a continuous compliance determination method, as defined in 40 CFR §64.1.
- An emission cap that meets the requirements specified in 40 CFR §70.4(b)(12).

c. The PSEU uses an add-on control device (as defined in 40 CFR §64.1) to achieve compliance with an emission limitation or standard;

d. The PSEU has potential pre-control device emissions of the applicable regulated air pollutant that are equal to or greater than the Title V Major Source Threshold Levels; AND

e. The PSEU is NOT an exempt backup utility power emissions unit that is municipally-owned.

BASIS OF CAM SUBMITTAL

2) Mark the appropriate box below as to why this CAM plan is being submitted as part of an application for a Title V permit:

☒ RENEWAL APPLICATION. **ALL** PSEUs for which a CAM plan has NOT yet been approved need to be addressed in this CAM plan submittal.

☐ INITIAL APPLICATION (submitted after 4/20/98). **ONLY** large PSEUs (i. e., PSEUs with potential post-control device emissions of an applicable regulated air pollutant that are equal to or greater than Major Source Threshold Levels) need to be addressed in this CAM plan submittal.

☐ SIGNIFICANT MODIFICATION TO LARGE PSEUs. **ONLY** large PSEUs being modified after 4/20/98 need to be addressed in this cam plan submittal. For large PSEUs with an approved CAM plan, Only address the appropriate monitoring requirements affected by the significant modification.

3) [a] *BACKGROUND DATA AND INFORMATION*

Complete the following table for **all** PSEUs that need to be addressed in this CAM plan submittal. This section is to be used to provide background data and information for each PSEU In order to supplement the submittal requirements specified in 40 CFR §64.4. If additional space is needed, attach and label accordingly.

PSEU DESIGNATION	DESCRIPTION	POLLUTANT	CONTROL DEVICE	[b] EMISSION LIMITATION or STANDARD	[c] MONITORING REQUIREMENT
Unit 1 Boiler	Combustion Engineering Model No. CCRRDP 60	PM	Electrostatic Precipitator	Permit no. R13-2735 -0.03 lb/mmBtu (6 hour average) , Permit no. R30-02300003 –combined total PM from Units 1, 2, 3 shall not exceed 866.85 lb/hr (6 hour average), paragraph 95 of 10/10/2003 VEPCO Consent Decree- 0.030 lb/mmBtu	Stack testing per the schedule set forth in BART permit R13-2735 permit condition 4.3.1; Stack testing per the schedule set forth in Title V permit condition 4.3.2; Once per every 4 successive "QA Operating Quarters" as defined in 40 CFR 72.2 per paragraph 95 of 10/10/2003 VEPCO Consent Decree
Unit 2 Boiler	Combustion Engineering Model No. CCRRDP 60	PM	Electrostatic Precipitator	Permit no. R13-2735 -0.03 lb/mmBtu (6 hour average) , Permit no. R30-02300003 –combined total PM from Units 1, 2, 3 shall not exceed 866.85 lb/hr (6 hour average), paragraph 95 of 10/10/2003 VEPCO Consent Decree- 0.030 lb/mmBtu	Stack testing per the schedule set forth in BART permit R13-2735 permit condition 4.3.1; Stack testing per the schedule set forth in Title V permit condition 4.3.2; Once per every 4 successive "QA Operating Quarters" as defined in 40 CFR 72.2 per paragraph 95 of 10/10/2003 VEPCO Consent Decree
Unit 3 Boiler	Combustion Engineering Model No. CCRD 66	PM	Electrostatic Precipitator	Permit no. R13-2735 -0.03 lb/mmBtu (6 hour average) , Permit no. R30-02300003 –combined total PM from Units 1, 2, 3 shall not exceed 866.85 lb/hr (6 hour average), paragraph 95 of 10/10/2003 VEPCO Consent Decree- 0.030 lb/mmBtu	Stack testing per the schedule set forth in BART permit R13-2735 permit condition 4.3.1; Stack testing per the schedule set forth in Title V permit condition 4.3.2; Once per every 4 successive "QA Operating Quarters" as defined in 40 CFR 72.2 per paragraph 95 of 10/10/2003 VEPCO Consent Decree
EXAMPLE Boiler No. 1	Wood-Fired Boiler	PM	Multiclone	45CSR§2-4.1.c.; 9.0 lb/hr	Monitor pressure drop across multiclone: Weekly inspection of multiclone

[a] If a control device is common to more than one PSEU, one monitoring plan may be submitted for the control device with the affected PSEUs identified and any conditions that must be maintained or monitored in accordance with 40 CFR §64.3(a). If a single PSEU is controlled by more than one control device similar in design and operation, one monitoring plan for the applicable control devices may be submitted with the applicable control devices identified and any conditions that must be maintained or monitored in accordance with 40 CFR §64.3(a).

[b] Indicate the emission limitation or standard for any applicable requirement that constitutes an emission limitation, emission standard, or standard of performance (as defined in 40 CFR §64.1).

[c] Indicate the monitoring requirements for the PSEU that are required by an applicable regulation or permit condition.

CAM MONITORING APPROACH CRITERIA

Complete this section for **EACH** PSEU that needs to be addressed in this CAM plan submittal. This section may be copied as needed for each PSEU. This section is to be used to provide monitoring data and information for EACH indicator selected for EACH PSEU in order to meet the monitoring design criteria specified in 40 CFR §64.3 and §64.4. if more than two indicators are being selected for a PSEU or if additional space is needed, attach and label accordingly with the appropriate PSEU designation, pollutant, and indicator numbers.

4a) PSEU Designation: **Unit 1 Boiler**	**4b) Pollutant:** **PM**	**4c) [a] Indicator No. 1:** Transformer Rectifiers	**4d) [a] Indicator No. 2:** Precipitator Rappers
5a) GENERAL CRITERIA Describe the MONITORING APPROACH used to measure the indicators:		Daily observation of each available rectifier or rectifier alarm status	Daily observation of available rappers and its controls
[b] Establish the appropriate INDICATOR RANGE or the procedures for establishing the indicator range which provides a reasonable assurance of compliance:		An excursion is defined as a non-energized available rectifier (excluding power-off rapping) or failure to perform the daily inspection of the rectifier.	An excursion is defined as a failure to perform the daily inspection of rappers.
5b) PERFORMANCE CRITERIA Provide the SPECIFICATIONS FOR OBTAINING REPRESENTATIVE DATA, such as detector location, installation specifications, and minimum acceptable accuracy:		Rectifier observations verify that adequate electrical power is supplied to the ESPs	Rapper observations verify that a rapper program is running.
[c] For new or modified monitoring equipment, provide VERIFICATION PROCEDURES, including manufacturer's recommendations, TO CONFIRM THE OPERATIONAL STATUS of the monitoring:		Rectifier observations verify that adequate electrical power is supplied to the ESPs	Rapper observations verify that a rapper program is running.
Provide QUALITY ASSURANCE AND QUALITY CONTROL (QA/QC) PRACTICES that are adequate to ensure the continuing validity of the data, (i.e., daily calibrations, visual inspections, routine maintenance, RATA, etc.):		ESPs are energized within 2 hours after commencement of combustion of any amount of coal (except when clearing out coal mills). All startups and events for which the unit is on-line and ESP is powered off are recorded.	Rapper equipment is checked daily and recorded in an equipment inspection report.
[d] Provide the MONITORING FREQUENCY:		Failures of the ESP equipment are recorded in an event log daily.	Failures of the rapper equipment are recorded in an event log daily.
Provide the DATA COLLECTION PROCEDURES that will be used:		Failures of the ESP equipment are recorded in an event log daily.	Failures of the rapper equipment are recorded in an event log daily.
Provide the DATA AVERAGING PERIOD for the purpose of determining whether an excursion or exceedance has occurred:		Not Applicable	Not Applicable

[a] Describe all indicators to be monitored which satisfies 40 CFR §64.3(a). Indicators of emission control performance for the control device and associated capture system may include measured or predicted emissions (including visible emissions or opacity), process and control device operating parameters that affect control device (and capture system) efficiency or emission rates, or recorded findings of inspection and maintenance activities.

[b] Indicator Ranges may be based on a single maximum or minimum value or at multiple levels that are relevant to distinctly different operating conditions, expressed as a function of process variables, expressed as maintaining the applicable indicator in a particular operational status or designated condition, or established as interdependent between more than one indicator. For CEMS, COMS, or PEMS, include the most recent certification test for the monitor.

[c] The verification for operational status should include procedures for installation, calibration, and operation of the monitoring equipment, conducted in accordance with the manufacturer's recommendations, necessary to confirm the monitoring equipment is operational prior to the commencement of the required monitoring.

[d] Emission units with post-control PTE ≥ 100 percent of the amount classifying the source as a major source (i.e., Large PSEU) must collect four or more values per hour to be averaged. A reduced data collection frequency may be approved in limited circumstances. Other emission units must collect data at least once per 24 hour period.

RATIONALE AND JUSTIFICATION

Complete this section for EACH PSEU that needs to be addressed in this CAM plan submittal. This section may be copied as needed for each PSEU. This section is to be used to provide rationale and justification for the selection of EACH indicator and monitoring approach and EACH indicator range in order to meet the submittal requirements specified in 40 CFR §64.4.

6a) PSEU Designation:	6b) Regulated Air Pollutant:
Unit 1 Boiler	PM

7) **INDICATORS AND THE MONITORING APPROACH**: Provide the rationale and justification for the selection of the indicators and the monitoring approach used to measure the indicators. Also provide any data supporting the rationale and justification. Explain the reasons for any differences between the verification of operational status or the quality assurance and control practices proposed, and the manufacturer's recommendations. (If additional space is needed, attach and label accordingly with the appropriate PSEU designation and pollutant):

Indicator 1: Transformer Rectifiers
Measurement approach: Daily observation of each available rectifier or rectifier alarm status

Indicator 2: Precipitator Rappers
Measurement approach: Daily observation of available rappers and its controls

Adequate electrical power input and periodic cleaning of the plates and wires is required for an Electrostatic Precipitator (ESP) to operate properly. Each ESP is equipped with a number of transformer rectifiers (TRs), (i.e., TR's provide the electrical power input) and rappers (i.e., the equipment that performs the cleaning). The power input from the TR's as well as rapper cleaning cycles are regulated by automatic controls. There are alarms in the control system that are triggered by the failure of either a TR or rapper; thereby, providing a continuous indication of the operating status of the TR's and rappers. ESP's have built in operating performance capacity to compensate for period of time when TR's or rappers may fail or not be available. Therefore; such equipment unavailablity does not indicate non-compliance or excess particulate emissions. Operators are trained and required to perform a daily ESP equipment inspection and record equipment failures in an ESP event log. Information from this equipment log will be summarized quarterly for CAM reporting under the CAM plan.

The CAM plan is required to provide reasonable assurance that the PM emissions are meeting the specified emission limit.

Stack testing for PM using EPA Reference Method 5 is conducted every three years under the Title V permit, R13-2735 BART permit, and annually under the Decree. Method 5 testing has demonstrated a reasonable margin of compliance with PM emission limits. In 2004 through 2009 all three units were tested for PM. The results were as follows:

2004 stack test: Particulate Matter Sampling Results - MS00: 0.0059 lb/mmBtu; MS03: 0.0096 lb/mmBtu
2005 stack test: Particulate Matter Sampling Results - MS00: 0.0055 lb/mmBtu; MS03: 0.0099 lb/mmBtu
2006 stack test: Particulate Matter Sampling Results - MS00: 0.0070 lb/mmBtu; MS03: 0.0205 lb/mmBtu
2007 stack test: Particulate Matter Sampling Results - MS00: 0.0059 lb/mmBtu; MS03: 0.0117 lb/mmBtu
2008 stack test: Particulate Matter Sampling Results - MS00: 0.0095 lb/mmBtu; MS03: 0.0123 lb/mmBtu
2009 stack test: Particulate Matter Sampling Result - MS00: 0.0140 lb/mmBtu; MS03: 0.0150 lb/mmBtu

Dominion will continue to conduct PM testing in accordance with the renewed Title V permit, R13-2735 BART permit, and the requirements of the Consent Decree.

The PM results for all three units were less than and did not exceed the most restrictive emission limit of 0.030 lb/mmBtu when either or both of the boilers were in operation. CAM is designed to provide data that "provide a reasonable assurance of compliance with emission limitations or standards for the anticipated range of operations" at an emissions unit. The tested emissions from this facility are within the respective emission limits, therefore, Dominion proposes that the parametric monitoring described in subsequent sections will be adequate to meet the requirements of CAM. A sample CAM table has also been attached.

Daily observation of available rectifier or rectifier alarm status along with daily observation of available rappers and its controls will provide a reasonable assurance of ongoing compliance with the PM limits for this facility and meet the intent of the CAM program.

8) **INDICATOR RANGES**: Provide the rationale and justification for the selection of the indicator ranges. The rationale and justification shall indicate how EACH indicator range was selected by either a COMPLIANCE OR PERFORMANCE TEST, a TEST PLAN AND SCHEDULE, or by ENGINEERING ASSESSMENTS. Depending on which method is being used for each indicator range, include the specific information required below for that specific indicator range. (If additional space is needed, attach and label accordingly with the appropriate PSEU designation and pollutant):

- COMPLIANCE OR PERFORMANCE TEST (Indicator ranges determined from control device operating parameter data obtained during a compliance or performance test conducted under regulatory specified conditions or under conditions representative of maximum potential emissions under anticipated operating conditions. Such data may be supplemented by engineering assessments and manufacturer's recommendations). The rationale and justification shall INCLUDE a summary of the compliance or performance test results that were used to determine the indicator range, and documentation indicating that no changes have taken place that could result in a significant change in the control system performance or the selected indicator ranges since the compliance or performance test was conducted.

- TEST PLAN AND SCHEDULE (Indicator ranges will be determined from a proposed implementation plan and schedule for installing, testing, and performing any other appropriate activities prior to use of the monitoring). The rationale and justification shall INCLUDE the proposed implementation plan and schedule that will provide for use of the monitoring as expeditiously as practicable after approval of this CAM plan, except that in no case shall the schedule for completing installation and beginning operation of the monitoring exceed 180 days after approval.

- ENGINEERING ASSESSMENTS (Indicator Ranges or the procedures for establishing indicator ranges are determined from engineering assessments and other data, such as manufacturers' design criteria and historical monitoring data, because factors specific to the type of monitoring, control device, or PSEU make compliance or performance testing unnecessary). The rationale and justification shall INCLUDE documentation demonstrating that compliance testing is not required to establish the indicator range.

RATIONALE AND JUSTIFICATION:

Indicator 1:

For Units 1, 2, and 3 an excursion shall be defined as a non-energized available rectifier (excluding power-off rapping) or failure to perform the daily inspection of the rectifier. Rectifier observations verify that adequate electrical power is supplied to the ESPs.

ESPs are energized within two hours after commencement of combustion of any amount of coal (except when clearing out coal mills). Each available portion of the ESP is energized and power levels delivered to the ESPs are maintained consistent with manufacturers' specifications, operational design of the equipment and good engineering practices. All startups and events for which the unit is on-line and ESP is powered off are recorded.

Failures of the ESP equipment are recorded in an event log daily.

Indicator 2:

For Units 1, 2, and 3 an excursion shall be defined as a failure to perform the daily inspection of the rappers. Rapper observations verify that a rapper program is running.

Rapper equipment is checked daily and recorded in an equipment inspection report.

Failures of the rapper equipment are recorded in an event log daily.

Mount Storm Power Station proposes that the daily observation of available rectifiers or rectifier alarm statuses along with the daily observation of available rappers and its controls together constitute CAM for Units 1, 2, and 3.

There have been no changes that have taken place that could result in a significant change in the control system performance or the selected indicator ranges since the compliance tests were conducted. These ESPs are maintained on a continuous basis. The ESPs are inspected and repaired as needed.

Electrostatic Precipitator Compliance Assurance Monitoring (CAM) Plan (Units: 1, 2, and 3)

Indicator	Indicator 1 Transformer Rectifiers	Indicator 2 Precipitator Rappers
Measurement approach	Daily observation of each available[1] rectifier or rectifier alarm status	Daily observation of available[1] rappers and its controls
Indicator range	An excursion is defined as a non-energized available rectifier (excluding power-off rapping) or failure to perform the daily inspection of the rectifier.	An excursion is defined as failure to perform the daily inspection of rappers.
Performance criteria: **Verification of operational status**	Rectifier observations verify that adequate electrical power is supplied to the ESPs.	Rapper observations verify that a rapper program is running
QA/QC practices and criteria	ESPs are energized within 2 hours after commencement of combustion of any amount of coal (except when clearing out coal mills). All startups and events for which the unit is on-line and the ESP is powered off are recorded.	Rapper equipment is checked daily and recorded in an equipment inspection report
Monitoring frequency and data collection procedure	Failures of the ESP equipment are recorded in an event log daily.	Failures of the rapper equipment are recorded in an event log daily.

[1] Available is defined as currently in service

ATTACHMENT H - Compliance Assurance Monitoring (CAM) Plan Form

For definitions and information about the CAM rule, please refer to 40 CFR Part 64. Additional information (including guidance documents) may also be found at http://www.epa.gov/ttn/emc/cam.html

CAM APPLICABILITY DETERMINATION

1) Does the facility have a PSEU (Pollutant-Specific Emissions Unit considered separately with respect to **EACH** regulated air pollutant) that is subject to CAM (40 CFR Part 64), which must be addressed in this CAM plan submittal? To determine applicability, a PSEU must meet **all** of the following criteria (*If No, then the remainder of this form need not be completed*): ☒ YES ☐ NO

a. The PSEU is located at a major source that is required to obtain a Title V permit;

b. The PSEU is subject to an emission limitation or standard for the applicable regulated air pollutant that is NOT exempt;

LIST OF EXEMPT EMISSION LIMITATIONS OR STANDARDS:

- NSPS (40 CFR Part 60) or NESHAP (40 CFR Parts 61 and 63) proposed after 11/15/1990.
- Stratospheric Ozone Protection Requirements.
- Acid Rain Program Requirements.
- Emission Limitations or Standards for which a WVDEP Division of Air Quality Title V permit specifies a continuous compliance determination method, as defined in 40 CFR §64.1.
- An emission cap that meets the requirements specified in 40 CFR §70.4(b)(12).

c. The PSEU uses an add-on control device (as defined in 40 CFR §64.1) to achieve compliance with an emission limitation or standard;

d. The PSEU has potential pre-control device emissions of the applicable regulated air pollutant that are equal to or greater than the Title V Major Source Threshold Levels; AND

e. The PSEU is NOT an exempt backup utility power emissions unit that is municipally-owned.

BASIS OF CAM SUBMITTAL

2) Mark the appropriate box below as to why this CAM plan is being submitted as part of an application for a Title V permit:

☒ RENEWAL APPLICATION. **ALL** PSEUs for which a CAM plan has NOT yet been approved need to be addressed in this CAM plan submittal.

☐ INITIAL APPLICATION (submitted after 4/20/98). **ONLY** large PSEUs (i. e., PSEUs with potential post-control device emissions of an applicable regulated air pollutant that are equal to or greater than Major Source Threshold Levels) need to be addressed in this CAM plan submittal.

☐ SIGNIFICANT MODIFICATION TO LARGE PSEUs. **ONLY** large PSEUs being modified after 4/20/98 need to be addressed in this cam plan submittal. For large PSEUs with an approved CAM plan, Only address the appropriate monitoring requirements affected by the significant modification.

3) [a] BACKGROUND DATA AND INFORMATION

Complete the following table for **all** PSEUs that need to be addressed in this CAM plan submittal. This section is to be used to provide background data and information for each PSEU In order to supplement the submittal requirements specified in 40 CFR §64.4. If additional space is needed, attach and label accordingly.

PSEU DESIGNATION	DESCRIPTION	POLLUTANT	CONTROL DEVICE	[b] EMISSION LIMITATION or STANDARD	[c] MONITORING REQUIREMENT
Unit 1 Boiler	Combustion Engineering Model No. CCRRDP 60	PM	Electrostatic Precipitator	Permit no. R13-2735 -0.03 lb/mmBtu (6 hour average) , Permit no. R30-02300003 –combined total PM from Units 1, 2, 3 shall not exceed 866.85 lb/hr (6 hour average), paragraph 95 of 10/10/2003 VEPCO Consent Decree- 0.030 lb/mmBtu	Stack testing per the schedule set forth in BART permit R13-2735 permit condition 4.3.1; Stack testing per the schedule set forth in Title V permit condition 4.3.2; Once per every 4 successive "QA Operating Quarters" as defined in 40 CFR 72.2 per paragraph 95 of 10/10/2003 VEPCO Consent Decree
Unit 2 Boiler	Combustion Engineering Model No. CCRRDP 60	PM	Electrostatic Precipitator	Permit no. R13-2735 -0.03 lb/mmBtu (6 hour average) , Permit no. R30-02300003 –combined total PM from Units 1, 2, 3 shall not exceed 866.85 lb/hr (6 hour average), paragraph 95 of 10/10/2003 VEPCO Consent Decree- 0.030 lb/mmBtu	Stack testing per the schedule set forth in BART permit R13-2735 permit condition 4.3.1; Stack testing per the schedule set forth in Title V permit condition 4.3.2; Once per every 4 successive "QA Operating Quarters" as defined in 40 CFR 72.2 per paragraph 95 of 10/10/2003 VEPCO Consent Decree
Unit 3 Boiler	Combustion Engineering Model No. CCRD 66	PM	Electrostatic Precipitator	Permit no. R13-2735 -0.03 lb/mmBtu (6 hour average) , Permit no. R30-02300003 –combined total PM from Units 1, 2, 3 shall not exceed 866.85 lb/hr (6 hour average), paragraph 95 of 10/10/2003 VEPCO Consent Decree- 0.030 lb/mmBtu	Stack testing per the schedule set forth in BART permit R13-2735 permit condition 4.3.1; Stack testing per the schedule set forth in Title V permit condition 4.3.2; Once per every 4 successive "QA Operating Quarters" as defined in 40 CFR 72.2 per paragraph 95 of 10/10/2003 VEPCO Consent Decree
EXAMPLE Boiler No. 1	Wood-Fired Boiler	PM	Multiclone	45CSR§2-4.1.c.; 9.0 lb/hr	Monitor pressure drop across multiclone: Weekly inspection of multiclone

[a] If a control device is common to more than one PSEU, one monitoring plan may be submitted for the control device with the affected PSEUs identified and any conditions that must be maintained or monitored in accordance with 40 CFR §64.3(a). If a single PSEU is controlled by more than one control device similar in design and operation, one monitoring plan for the applicable control devices may be submitted with the applicable control devices identified and any conditions that must be maintained or monitored in accordance with 40 CFR §64.3(a).

[b] Indicate the emission limitation or standard for any applicable requirement that constitutes an emission limitation, emission standard, or standard of performance (as defined in 40 CFR §64.1).

[c] Indicate the monitoring requirements for the PSEU that are required by an applicable regulation or permit condition.

CAM MONITORING APPROACH CRITERIA

Complete this section for **EACH** PSEU that needs to be addressed in this CAM plan submittal. This section may be copied as needed for each PSEU. This section is to be used to provide monitoring data and information for EACH indicator selected for EACH PSEU in order to meet the monitoring design criteria specified in 40 CFR §64.3 and §64.4. if more than two indicators are being selected for a PSEU or if additional space is needed, attach and label accordingly with the appropriate PSEU designation, pollutant, and indicator numbers.

4a) PSEU Designation: **Unit 2 Boiler**	**4b) Pollutant:** **PM**	**4c) [a] Indicator No. 1:** Transformer Rectifiers	**4d) [a] Indicator No. 2:** Precipitator Rappers
5a) GENERAL CRITERIA Describe the MONITORING APPROACH used to measure the indicators:		Daily observation of each available rectifier or rectifier alarm status	Daily observation of available rappers and its controls
[b] Establish the appropriate INDICATOR RANGE or the procedures for establishing the indicator range which provides a reasonable assurance of compliance:		An excursion is defined as a non-energized available rectifier (excluding power-off rapping) or failure to perform the daily inspection of the rectifier.	An excursion is defined as a failure to perform the daily inspection of rappers.
5b) PERFORMANCE CRITERIA Provide the SPECIFICATIONS FOR OBTAINING REPRESENTATIVE DATA, such as detector location, installation specifications, and minimum acceptable accuracy:		Rectifier observations verify that adequate electrical power is supplied to the ESPs	Rapper observations verify that a rapper program is running.
[c] For new or modified monitoring equipment, provide VERIFICATION PROCEDURES, including manufacturer's recommendations, TO CONFIRM THE OPERATIONAL STATUS of the monitoring:		Rectifier observations verify that adequate electrical power is supplied to the ESPs	Rapper observations verify that a rapper program is running.
Provide QUALITY ASSURANCE AND QUALITY CONTROL (QA/QC) PRACTICES that are adequate to ensure the continuing validity of the data, (i.e., daily calibrations, visual inspections, routine maintenance, RATA, etc.):		ESPs are energized within 2 hours after commencement of combustion of any amount of coal (except when clearing out coal mills). All startups and events for which the unit is on-line and ESP is powered off are recorded.	Rapper equipment is checked daily and recorded in an equipment inspection report.
[d] Provide the MONITORING FREQUENCY:		Failures of the ESP equipment are recorded in an event log daily.	Failures of the rapper equipment are recorded in an event log daily.
Provide the DATA COLLECTION PROCEDURES that will be used:		Failures of the ESP equipment are recorded in an event log daily.	Failures of the rapper equipment are recorded in an event log daily.
Provide the DATA AVERAGING PERIOD for the purpose of determining whether an excursion or exceedance has occurred:		Not Applicable	Not Applicable

[a] Describe all indicators to be monitored which satisfies 40 CFR §64.3(a). Indicators of emission control performance for the control device and associated capture system may include measured or predicted emissions (including visible emissions or opacity), process and control device operating parameters that affect control device (and capture system) efficiency or emission rates, or recorded findings of inspection and maintenance activities.

[b] Indicator Ranges may be based on a single maximum or minimum value or at multiple levels that are relevant to distinctly different operating conditions, expressed as a function of process variables, expressed as maintaining the applicable indicator in a particular operational status or designated condition, or established as interdependent between more than one indicator. For CEMS, COMS, or PEMS, include the most recent certification test for the monitor.

[c] The verification for operational status should include procedures for installation, calibration, and operation of the monitoring equipment, conducted in accordance with the manufacturer's recommendations, necessary to confirm the monitoring equipment is operational prior to the commencement of the required monitoring.

[d] Emission units with post-control PTE ≥ 100 percent of the amount classifying the source as a major source (i.e., Large PSEU) must collect four or more values per hour to be averaged. A reduced data collection frequency may be approved in limited circumstances. Other emission units must collect data at least once per 24 hour period.

RATIONALE AND JUSTIFICATION

Complete this section for EACH PSEU that needs to be addressed in this CAM plan submittal. This section may be copied as needed for each PSEU. This section is to be used to provide rationale and justification for the selection of EACH indicator and monitoring approach and EACH indicator range in order to meet the submittal requirements specified in 40 CFR §64.4.

6a) PSEU Designation:	6b) Regulated Air Pollutant:
Unit 2 Boiler	PM

7) **INDICATORS AND THE MONITORING APPROACH**: Provide the rationale and justification for the selection of the indicators and the monitoring approach used to measure the indicators. Also provide any data supporting the rationale and justification. Explain the reasons for any differences between the verification of operational status or the quality assurance and control practices proposed, and the manufacturer's recommendations. (If additional space is needed, attach and label accordingly with the appropriate PSEU designation and pollutant):

Indicator 1: Transformer Rectifiers
Measurement approach: Daily observation of each available rectifier or rectifier alarm status

Indicator 2: Precipitator Rappers
Measurement approach: Daily observation of available rappers and its controls

Adequate electrical power input and periodic cleaning of the plates and wires is required for an Electrostatic Precipitator (ESP) to operate properly. Each ESP is equipped with a number of transformer rectifiers (TRs), (i.e., TR's provide the electrical power input) and rappers (i.e., the equipment that performs the cleaning). The power input from the TR's as well as rapper cleaning cycles are regulated by automatic controls. There are alarms in the control system that are triggered by the failure of either a TR or rapper; thereby, providing a continuous indication of the operating status of the TR's and rappers. ESP's have built in operating performance capacity to compensate for period of time when TR's or rappers may fail or not be available. Therefore; such equipment unavailablity does not indicate non-compliance or excess particulate emissions. Operators are trained and required to perform a daily ESP equipment inspection and record equipment failures in an ESP event log. Information from this equipment log will be summarized quarterly for CAM reporting under the CAM plan.

The CAM plan is required to provide reasonable assurance that the PM emissions are meeting the specified emission limit.

Stack testing for PM using EPA Reference Method 5 is conducted every three years under the Title V permit, R13-2735 BART permit, and annually under the Decree. Method 5 testing has demonstrated a reasonable margin of compliance with PM emission limits. In 2004 through 2009 all three units were tested for PM. The results were as follows:

2004 stack test: Particulate Matter Sampling Results - MS00: 0.0059 lb/mmBtu; MS03: 0.0096 lb/mmBtu
2005 stack test: Particulate Matter Sampling Results - MS00: 0.0055 lb/mmBtu; MS03: 0.0099 lb/mmBtu
2006 stack test: Particulate Matter Sampling Results - MS00: 0.0070 lb/mmBtu; MS03: 0.0205 lb/mmBtu
2007 stack test: Particulate Matter Sampling Results - MS00: 0.0059 lb/mmBtu; MS03: 0.0117 lb/mmBtu
2008 stack test: Particulate Matter Sampling Results - MS00: 0.0095 lb/mmBtu; MS03: 0.0123 lb/mmBtu
2009 stack test: Particulate Matter Sampling Result - MS00: 0.0140 lb/mmBtu; MS03: 0.0150 lb/mmBtu

Dominion will continue to conduct PM testing in accordance with the renewed Title V permit, R13-2735 BART permit, and the requirements of the Consent Decree.

The PM results for all three units were less than and did not exceed the most restrictive emission limit of 0.030 lb/mmBtu when either or both of the boilers were in operation. CAM is designed to provide data that "provide a reasonable assurance of compliance with emission limitations or standards for the anticipated range of operations" at an emissions unit. The tested emissions from this facility are within the respective emission limits, therefore, Dominion proposes that the parametric monitoring described in subsequent sections will be adequate to meet the requirements of CAM. A sample CAM table has also been attached.

Daily observation of available rectifier or rectifier alarm status along with daily observation of available rappers and its controls will provide a reasonable assurance of ongoing compliance with the PM limits for this facility and meet the intent of the CAM program.

8) **INDICATOR RANGES**: Provide the rationale and justification for the selection of the indicator ranges. The rationale and justification shall indicate how EACH indicator range was selected by either a COMPLIANCE OR PERFORMANCE TEST, a TEST PLAN AND SCHEDULE, or by ENGINEERING ASSESSMENTS. Depending on which method is being used for each indicator range, include the specific information required below for that specific indicator range. (If additional space is needed, attach and label accordingly with the appropriate PSEU designation and pollutant):

- COMPLIANCE OR PERFORMANCE TEST (Indicator ranges determined from control device operating parameter data obtained during a compliance or performance test conducted under regulatory specified conditions or under conditions representative of maximum potential emissions under anticipated operating conditions. Such data may be supplemented by engineering assessments and manufacturer's recommendations). The rationale and justification shall INCLUDE a summary of the compliance or performance test results that were used to determine the indicator range, and documentation indicating that no changes have taken place that could result in a significant change in the control system performance or the selected indicator ranges since the compliance or performance test was conducted.

- TEST PLAN AND SCHEDULE (Indicator ranges will be determined from a proposed implementation plan and schedule for installing, testing, and performing any other appropriate activities prior to use of the monitoring). The rationale and justification shall INCLUDE the proposed implementation plan and schedule that will provide for use of the monitoring as expeditiously as practicable after approval of this CAM plan, except that in no case shall the schedule for completing installation and beginning operation of the monitoring exceed 180 days after approval.

- ENGINEERING ASSESSMENTS (Indicator Ranges or the procedures for establishing indicator ranges are determined from engineering assessments and other data, such as manufacturers' design criteria and historical monitoring data, because factors specific to the type of monitoring, control device, or PSEU make compliance or performance testing unnecessary). The rationale and justification shall INCLUDE documentation demonstrating that compliance testing is not required to establish the indicator range.

RATIONALE AND JUSTIFICATION:

Indicator 1:

For Units 1, 2, and 3 an excursion shall be defined as a non-energized available rectifier (excluding power-off rapping) or failure to perform the daily inspection of the rectifier. Rectifier observations verify that adequate electrical power is supplied to the ESPs.

ESPs are energized within two hours after commencement of combustion of any amount of coal (except when clearing out coal mills). Each available portion of the ESP is energized and power levels delivered to the ESPs are maintained consistent with manufacturers' specifications, operational design of the equipment and good engineering practices. All startups and events for which the unit is on-line and ESP is powered off are recorded.

Failures of the ESP equipment are recorded in an event log daily.

Indicator 2:

For Units 1, 2, and 3 an excursion shall be defined as a failure to perform the daily inspection of the rappers. Rapper observations verify that a rapper program is running.

Rapper equipment is checked daily and recorded in an equipment inspection report.

Failures of the rapper equipment are recorded in an event log daily.

Mount Storm Power Station proposes that the daily observation of available rectifiers or rectifier alarm statuses along with the daily observation of available rappers and its controls together constitute CAM for Units 1, 2, and 3.

There have been no changes that have taken place that could result in a significant change in the control system performance or the selected indicator ranges since the compliance tests were conducted. These ESPs are maintained on a continuous basis. The ESPs are inspected and repaired as needed.

Electrostatic Precipitator Compliance Assurance Monitoring (CAM) Plan (Units: 1, 2, and 3)

Indicator	Indicator 1 Transformer Rectifiers	Indicator 2 Precipitator Rappers
Measurement approach	Daily observation of each available[1] rectifier or rectifier alarm status	Daily observation of available[1] rappers and its controls
Indicator range	An excursion is defined as a non-energized available rectifier (excluding power-off rapping) or failure to perform the daily inspection of the rectifier.	An excursion is defined as failure to perform the daily inspection of rappers.
Performance criteria: **Verification of operational status**	Rectifier observations verify that adequate electrical power is supplied to the ESPs.	Rapper observations verify that a rapper program is running
QA/QC practices and criteria	ESPs are energized within 2 hours after commencement of combustion of any amount of coal (except when clearing out coal mills). All startups and events for which the unit is on-line and the ESP is powered off are recorded.	Rapper equipment is checked daily and recorded in an equipment inspection report
Monitoring frequency and data collection procedure	Failures of the ESP equipment are recorded in an event log daily.	Failures of the rapper equipment are recorded in an event log daily.

[1] Available is defined as currently in service

ATTACHMENT H - Compliance Assurance Monitoring (CAM) Plan Form

For definitions and information about the CAM rule, please refer to 40 CFR Part 64. Additional information (including guidance documents) may also be found at http://www.epa.gov/ttn/emc/cam.html

CAM APPLICABILITY DETERMINATION

1) Does the facility have a PSEU (Pollutant-Specific Emissions Unit considered separately with respect to **EACH** regulated air pollutant) that is subject to CAM (40 CFR Part 64), which must be addressed in this CAM plan submittal? To determine applicability, a PSEU must meet **all** of the following criteria (*If No, then the remainder of this form need not be completed*): ☒ YES ☐ NO

a. The PSEU is located at a major source that is required to obtain a Title V permit;

b. The PSEU is subject to an emission limitation or standard for the applicable regulated air pollutant that is NOT exempt;

LIST OF EXEMPT EMISSION LIMITATIONS OR STANDARDS:

- NSPS (40 CFR Part 60) or NESHAP (40 CFR Parts 61 and 63) proposed after 11/15/1990.
- Stratospheric Ozone Protection Requirements.
- Acid Rain Program Requirements.
- Emission Limitations or Standards for which a WVDEP Division of Air Quality Title V permit specifies a continuous compliance determination method, as defined in 40 CFR §64.1.
- An emission cap that meets the requirements specified in 40 CFR §70.4(b)(12).

c. The PSEU uses an add-on control device (as defined in 40 CFR §64.1) to achieve compliance with an emission limitation or standard;

d. The PSEU has potential pre-control device emissions of the applicable regulated air pollutant that are equal to or greater than the Title V Major Source Threshold Levels; AND

e. The PSEU is NOT an exempt backup utility power emissions unit that is municipally-owned.

BASIS OF CAM SUBMITTAL

2) Mark the appropriate box below as to why this CAM plan is being submitted as part of an application for a Title V permit:

☒ RENEWAL APPLICATION. **ALL** PSEUs for which a CAM plan has NOT yet been approved need to be addressed in this CAM plan submittal.

☐ INITIAL APPLICATION (submitted after 4/20/98). **ONLY** large PSEUs (i. e., PSEUs with potential post-control device emissions of an applicable regulated air pollutant that are equal to or greater than Major Source Threshold Levels) need to be addressed in this CAM plan submittal.

☐ SIGNIFICANT MODIFICATION TO LARGE PSEUs. **ONLY** large PSEUs being modified after 4/20/98 need to be addressed in this cam plan submittal. For large PSEUs with an approved CAM plan, Only address the appropriate monitoring requirements affected by the significant modification.

3) [a] BACKGROUND DATA AND INFORMATION

Complete the following table for all PSEUs that need to be addressed in this CAM plan submittal. This section is to be used to provide background data and information for each PSEU In order to supplement the submittal requirements specified in 40 CFR §64.4. If additional space is needed, attach and label accordingly.

PSEU DESIGNATION	DESCRIPTION	POLLUTANT	CONTROL DEVICE	[b] EMISSION LIMITATION or STANDARD	[c] MONITORING REQUIREMENT
Unit 1 Boiler	Combustion Engineering Model No. CCRRDP 60	PM	Electrostatic Precipitator	Permit no. R13-2735 -0.03 lb/mmBtu (6 hour average) , Permit no. R30-02300003 –combined total PM from Units 1, 2, 3 shall not exceed 866.85 lb/hr (6 hour average), paragraph 95 of 10/10/2003 VEPCO Consent Decree- 0.030 lb/mmBtu	Stack testing per the schedule set forth in BART permit R13-2735 permit condition 4.3.1; Stack testing per the schedule set forth in Title V permit condition 4.3.2; Once per every 4 successive "QA Operating Quarters" as defined in 40 CFR 72.2 per paragraph 95 of 10/10/2003 VEPCO Consent Decree
Unit 2 Boiler	Combustion Engineering Model No. CCRRDP 60	PM	Electrostatic Precipitator	Permit no. R13-2735 -0.03 lb/mmBtu (6 hour average) , Permit no. R30-02300003 –combined total PM from Units 1, 2, 3 shall not exceed 866.85 lb/hr (6 hour average), paragraph 95 of 10/10/2003 VEPCO Consent Decree- 0.030 lb/mmBtu	Stack testing per the schedule set forth in BART permit R13-2735 permit condition 4.3.1; Stack testing per the schedule set forth in Title V permit condition 4.3.2; Once per every 4 successive "QA Operating Quarters" as defined in 40 CFR 72.2 per paragraph 95 of 10/10/2003 VEPCO Consent Decree
Unit 3 Boiler	Combustion Engineering Model No. CCRD 66	PM	Electrostatic Precipitator	Permit no. R13-2735 -0.03 lb/mmBtu (6 hour average) , Permit no. R30-02300003 –combined total PM from Units 1, 2, 3 shall not exceed 866.85 lb/hr (6 hour average), paragraph 95 of 10/10/2003 VEPCO Consent Decree- 0.030 lb/mmBtu	Stack testing per the schedule set forth in BART permit R13-2735 permit condition 4.3.1; Stack testing per the schedule set forth in Title V permit condition 4.3.2; Once per every 4 successive "QA Operating Quarters" as defined in 40 CFR 72.2 per paragraph 95 of 10/10/2003 VEPCO Consent Decree
EXAMPLE Boiler No. 1	Wood-Fired Boiler	PM	Multiclone	45CSR§2-4.1.c.; 9.0 lb/hr	Monitor pressure drop across multiclone: Weekly inspection of multiclone

[a] If a control device is common to more than one PSEU, one monitoring plan may be submitted for the control device with the affected PSEUs identified and any conditions that must be maintained or monitored in accordance with 40 CFR §64.3(a). If a single PSEU is controlled by more than one control device similar in design and operation, one monitoring plan for the applicable control devices may be submitted with the applicable control devices identified and any conditions that must be maintained or monitored in accordance with 40 CFR §64.3(a).

[b] Indicate the emission limitation or standard for any applicable requirement that constitutes an emission limitation, emission standard, or standard of performance (as defined in 40 CFR §64.1).

[c] Indicate the monitoring requirements for the PSEU that are required by an applicable regulation or permit condition.

CAM MONITORING APPROACH CRITERIA

Complete this section for **EACH** PSEU that needs to be addressed in this CAM plan submittal. This section may be copied as needed for each PSEU. This section is to be used to provide monitoring data and information for EACH indicator selected for EACH PSEU in order to meet the monitoring design criteria specified in 40 CFR §64.3 and §64.4. if more than two indicators are being selected for a PSEU or if additional space is needed, attach and label accordingly with the appropriate PSEU designation, pollutant, and indicator numbers.

4a) PSEU Designation: **Unit 3 Boiler**	**4b) Pollutant:** **PM**	**4c) [a] Indicator No. 1:** Transformer Rectifiers	**4d) [a] Indicator No. 2:** Precipitator Rappers
5a) GENERAL CRITERIA Describe the MONITORING APPROACH used to measure the indicators:		Daily observation of each available rectifier or rectifier alarm status	Daily observation of available rappers and its controls
[b] Establish the appropriate INDICATOR RANGE or the procedures for establishing the indicator range which provides a reasonable assurance of compliance:		An excursion is defined as a non-energized available rectifier (excluding power-off rapping) or failure to perform the daily inspection of the rectifier.	An excursion is defined as a failure to perform the daily inspection of rappers.
5b) PERFORMANCE CRITERIA Provide the SPECIFICATIONS FOR OBTAINING REPRESENTATIVE DATA, such as detector location, installation specifications, and minimum acceptable accuracy:		Rectifier observations verify that adequate electrical power is supplied to the ESPs	Rapper observations verify that a rapper program is running.
[c] For new or modified monitoring equipment, provide VERIFICATION PROCEDURES, including manufacturer's recommendations, TO CONFIRM THE OPERATIONAL STATUS of the monitoring:		Rectifier observations verify that adequate electrical power is supplied to the ESPs	Rapper observations verify that a rapper program is running.
Provide QUALITY ASSURANCE AND QUALITY CONTROL (QA/QC) PRACTICES that are adequate to ensure the continuing validity of the data, (i.e., daily calibrations, visual inspections, routine maintenance, RATA, etc.):		ESPs are energized within 2 hours after commencement of combustion of any amount of coal (except when clearing out coal mills). All startups and events for which the unit is on-line and ESP is powered off are recorded.	Rapper equipment is checked daily and recorded in an equipment inspection report.
[d] Provide the MONITORING FREQUENCY:		Failures of the ESP equipment are recorded in an event log daily.	Failures of the rapper equipment are recorded in an event log daily.
Provide the DATA COLLECTION PROCEDURES that will be used:		Failures of the ESP equipment are recorded in an event log daily.	Failures of the rapper equipment are recorded in an event log daily.
Provide the DATA AVERAGING PERIOD for the purpose of determining whether an excursion or exceedance has occurred:		Not Applicable	Not Applicable

[a] Describe all indicators to be monitored which satisfies 40 CFR §64.3(a). Indicators of emission control performance for the control device and associated capture system may include measured or predicted emissions (including visible emissions or opacity), process and control device operating parameters that affect control device (and capture system) efficiency or emission rates, or recorded findings of inspection and maintenance activities.

[b] Indicator Ranges may be based on a single maximum or minimum value or at multiple levels that are relevant to distinctly different operating conditions, expressed as a function of process variables, expressed as maintaining the applicable indicator in a particular operational status or designated condition, or established as interdependent between more than one indicator. For CEMS, COMS, or PEMS, include the most recent certification test for the monitor.

[c] The verification for operational status should include procedures for installation, calibration, and operation of the monitoring equipment, conducted in accordance with the manufacturer's recommendations, necessary to confirm the monitoring equipment is operational prior to the commencement of the required monitoring.

[d] Emission units with post-control PTE ≥ 100 percent of the amount classifying the source as a major source (i.e., Large PSEU) must collect four or more values per hour to be averaged. A reduced data collection frequency may be approved in limited circumstances. Other emission units must collect data at least once per 24 hour period.

RATIONALE AND JUSTIFICATION

Complete this section for EACH PSEU that needs to be addressed in this CAM plan submittal. This section may be copied as needed for each PSEU. This section is to be used to provide rationale and justification for the selection of EACH indicator and monitoring approach and EACH indicator range in order to meet the submittal requirements specified in 40 CFR §64.4.

6a) PSEU Designation:	6b) Regulated Air Pollutant:
Unit 3 Boiler	PM

7) **INDICATORS AND THE MONITORING APPROACH**: Provide the rationale and justification for the selection of the indicators and the monitoring approach used to measure the indicators. Also provide any data supporting the rationale and justification. Explain the reasons for any differences between the verification of operational status or the quality assurance and control practices proposed, and the manufacturer's recommendations. (If additional space is needed, attach and label accordingly with the appropriate PSEU designation and pollutant):

Indicator 1: Transformer Rectifiers
Measurement approach: Daily observation of each available rectifier or rectifier alarm status

Indicator 2: Precipitator Rappers
Measurement approach: Daily observation of available rappers and its controls

Adequate electrical power input and periodic cleaning of the plates and wires is required for an Electrostatic Precipitator (ESP) to operate properly. Each ESP is equipped with a number of transformer rectifiers (TRs), (i.e., TR's provide the electrical power input) and rappers (i.e., the equipment that performs the cleaning). The power input from the TR's as well as rapper cleaning cycles are regulated by automatic controls. There are alarms in the control system that are triggered by the failure of either a TR or rapper; thereby, providing a continuous indication of the operating status of the TR's and rappers. ESP's have built in operating performance capacity to compensate for period of time when TR's or rappers may fail or not be available. Therefore; such equipment unavailablity does not indicate non-compliance or excess particulate emissions. Operators are trained and required to perform a daily ESP equipment inspection and record equipment failures in an ESP event log. Information from this equipment log will be summarized quarterly for CAM reporting under the CAM plan.

The CAM plan is required to provide reasonable assurance that the PM emissions are meeting the specified emission limit.

Stack testing for PM using EPA Reference Method 5 is conducted every three years under the Title V permit, R13-2735 BART permit, and annually under the Decree. Method 5 testing has demonstrated a reasonable margin of compliance with PM emission limits. In 2004 through 2009 all three units were tested for PM. The results were as follows:

2004 stack test: Particulate Matter Sampling Results - MS00: 0.0059 lb/mmBtu; MS03: 0.0096 lb/mmBtu
2005 stack test: Particulate Matter Sampling Results - MS00: 0.0055 lb/mmBtu; MS03: 0.0099 lb/mmBtu
2006 stack test: Particulate Matter Sampling Results - MS00: 0.0070 lb/mmBtu; MS03: 0.0205 lb/mmBtu
2007 stack test: Particulate Matter Sampling Results - MS00: 0.0059 lb/mmBtu; MS03: 0.0117 lb/mmBtu
2008 stack test: Particulate Matter Sampling Results - MS00: 0.0095 lb/mmBtu; MS03: 0.0123 lb/mmBtu
2009 stack test: Particulate Matter Sampling Result - MS00: 0.0140 lb/mmBtu; MS03: 0.0150 lb/mmBtu

Dominion will continue to conduct PM testing in accordance with the renewed Title V permit, R13-2735 BART permit, and the requirements of the Consent Decree.

The PM results for all three units were less than and did not exceed the most restrictive emission limit of 0.030 lb/mmBtu when either or both of the boilers were in operation. CAM is designed to provide data that "provide a reasonable assurance of compliance with emission limitations or standards for the anticipated range of operations" at an emissions unit. The tested emissions from this facility are within the respective emission limits, therefore, Dominion proposes that the parametric monitoring described in subsequent sections will be adequate to meet the requirements of CAM. A sample CAM table has also been attached.

Daily observation of available rectifier or rectifier alarm status along with daily observation of available rappers and its controls will provide a reasonable assurance of ongoing compliance with the PM limits for this facility and meet the intent of the CAM program.

8) **INDICATOR RANGES**: Provide the rationale and justification for the selection of the indicator ranges. The rationale and justification shall indicate how EACH indicator range was selected by either a COMPLIANCE OR PERFORMANCE TEST, a TEST PLAN AND SCHEDULE, or by ENGINEERING ASSESSMENTS. Depending on which method is being used for each indicator range, include the specific information required below for that specific indicator range. (If additional space is needed, attach and label accordingly with the appropriate PSEU designation and pollutant):

- COMPLIANCE OR PERFORMANCE TEST (Indicator ranges determined from control device operating parameter data obtained during a compliance or performance test conducted under regulatory specified conditions or under conditions representative of maximum potential emissions under anticipated operating conditions. Such data may be supplemented by engineering assessments and manufacturer's recommendations). The rationale and justification shall INCLUDE a summary of the compliance or performance test results that were used to determine the indicator range, and documentation indicating that no changes have taken place that could result in a significant change in the control system performance or the selected indicator ranges since the compliance or performance test was conducted.

- TEST PLAN AND SCHEDULE (Indicator ranges will be determined from a proposed implementation plan and schedule for installing, testing, and performing any other appropriate activities prior to use of the monitoring). The rationale and justification shall INCLUDE the proposed implementation plan and schedule that will provide for use of the monitoring as expeditiously as practicable after approval of this CAM plan, except that in no case shall the schedule for completing installation and beginning operation of the monitoring exceed 180 days after approval.

- ENGINEERING ASSESSMENTS (Indicator Ranges or the procedures for establishing indicator ranges are determined from engineering assessments and other data, such as manufacturers' design criteria and historical monitoring data, because factors specific to the type of monitoring, control device, or PSEU make compliance or performance testing unnecessary). The rationale and justification shall INCLUDE documentation demonstrating that compliance testing is not required to establish the indicator range.

RATIONALE AND JUSTIFICATION:

Indicator 1:

For Units 1, 2, and 3 an excursion shall be defined as a non-energized available rectifier (excluding power-off rapping) or failure to perform the daily inspection of the rectifier. Rectifier observations verify that adequate electrical power is supplied to the ESPs.

ESPs are energized within two hours after commencement of combustion of any amount of coal (except when clearing out coal mills). Each available portion of the ESP is energized and power levels delivered to the ESPs are maintained consistent with manufacturers' specifications, operational design of the equipment and good engineering practices. All startups and events for which the unit is on-line and ESP is powered off are recorded.

Failures of the ESP equipment are recorded in an event log daily.

Indicator 2:

For Units 1, 2, and 3 an excursion shall be defined as a failure to perform the daily inspection of the rappers. Rapper observations verify that a rapper program is running.

Rapper equipment is checked daily and recorded in an equipment inspection report.

Failures of the rapper equipment are recorded in an event log daily.

Mount Storm Power Station proposes that the daily observation of available rectifiers or rectifier alarm statuses along with the daily observation of available rappers and its controls together constitute CAM for Units 1, 2, and 3.

There have been no changes that have taken place that could result in a significant change in the control system performance or the selected indicator ranges since the compliance tests were conducted. These ESPs are maintained on a continuous basis. The ESPs are inspected and repaired as needed.

Electrostatic Precipitator Compliance Assurance Monitoring (CAM) Plan (Units: 1, 2, and 3)

Indicator	Indicator 1 Transformer Rectifiers	Indicator 2 Precipitator Rappers
Measurement approach	Daily observation of each available[1] rectifier or rectifier alarm status	Daily observation of available[1] rappers and its controls
Indicator range	An excursion is defined as a non-energized available rectifier (excluding power-off rapping) or failure to perform the daily inspection of the rectifier.	An excursion is defined as failure to perform the daily inspection of rappers.
Performance criteria: **Verification of operational status**	Rectifier observations verify that adequate electrical power is supplied to the ESPs.	Rapper observations verify that a rapper program is running
QA/QC practices and criteria	ESPs are energized within 2 hours after commencement of combustion of any amount of coal (except when clearing out coal mills). All startups and events for which the unit is on-line and the ESP is powered off are recorded.	Rapper equipment is checked daily and recorded in an equipment inspection report
Monitoring frequency and data collection procedure	Failures of the ESP equipment are recorded in an event log daily.	Failures of the rapper equipment are recorded in an event log daily.

[1] Available is defined as currently in service

ATTACHMENT I
EMISSION CALCULATIONS

Mount Storm Power Station
Emission Calculations for: MS1&2(Unit1)

Emission Unit ID	Emission Point ID	Pollution Contro Devicel ID	Pollution Control Device Description	Source ID #	Source Description	Full Load Thruput (tph)	Typical Eq. Full Load Hours	Max. Hours	Emission Factor	Emission Factor Units	Emission Factor Source	Control Efficiency	Actual Emissions (lb/hr)	Actual Emissions (TPY)	Maximum Uncontrolled (lb/hr)	Maximum Uncontrolled (TPY)	Permit Limit (lb/hr)	Potential Emissions (lb/hr)	Potential Emissions (TPY)
MTST-01-BLR-STG-1	MS1/2	ESP, FGDS, LNB, SCR	Electrostatic Precipitator, Flue Gas Desulfurization System, Low NOX Burner, Selected Catalytic Reduction	Unit 1 Boiler	PC Boiler Unit 1 Exhaust, CO (Coal)	236	8000	8672	0.0111	lb/MMBtu	Stack Test (1)	-	53.07	212	64	278	866.85	866.85	3759
MTST-01-BLR-STG-1	MS1/2	ESP, FGDS, LNB, SCR	Electrostatic Precipitator, Flue Gas Desulfurization System, Low NOX Burner, Selected Catalytic Reduction	Unit 1 Boiler	PC Boiler Unit 1 Exhaust, NO_X (Coal)	236	8000	8672	0.07	lb/MMBtu	CEMS (1) (2)	-	334.43	1338	404	1753	NA	404.20	1753
MTST-01-BLR-STG-1	MS1/2	ESP, FGDS, LNB, SCR	Electrostatic Precipitator, Flue Gas Desulfurization System, Low NOX Burner, Selected Catalytic Reduction	Unit 1 Boiler	PC Boiler Unit 1 Exhaust, Lead (Coal)	236	8000	8672	2.32	lb/TBtu	Stack Test (1)	-	0.011	0.044	0.013	0.06	NA	0.01	0.06
MTST-01-BLR-STG-1	MS1/2	ESP, FGDS, LNB, SCR	Electrostatic Precipitator, Flue Gas Desulfurization System, Low NOX Burner, Selected Catalytic Reduction	Unit 1 Boiler	PC Boiler Unit 1 Exhaust, PM (Coal)	236	8000	8672	0.010	lb/MMBtu	Stack Test (1)	99.81%	47.82	191	58	251	288.95	288.95	1253
MTST-01-BLR-STG-1	MS1/2	ESP, FGDS, LNB, SCR	Electrostatic Precipitator, Flue Gas Desulfurization System, Low NOX Burner, Selected Catalytic Reduction	Unit 1 Boiler	PC Boiler Unit 1 Exhaust, PM10 (Coal)	236	8000	8672	0.007	lb/MMBtu	Ratio of PM Stack test, AP-42, 1.1-6, Scrubber	99.81%	33.47	134	40	175	173.37	173.37	752
MTST-01-BLR-STG-1	MS1/2	ESP, FGDS, LNB, SCR	Electrostatic Precipitator, Flue Gas Desulfurization System, Low NOX Burner, Selected Catalytic Reduction	Unit 1 Boiler	PC Boiler Unit 1 Exhaust, SO_2 (Coal)	236	8000	8672	0.05	lb/MMBtu	CEMS (1) (2)	95%	233.14	933	282	1222	15603	15603.3	67656
MTST-01-BLR-STG-1	MS1/2	ESP, FGDS, LNB, SCR	Electrostatic Precipitator, Flue Gas Desulfurization System, Low NOX Burner, Selected Catalytic Reduction	Unit 1 Boiler	PC Boiler Unit 1 Exhaust, VOC (Coal)	236	8000	8672	0.002	lb/MMBtu	AP-42, Table 1.1-19, 5th edition	-	11.71	46.84	14.15	61.37	NA	14.15	61
MTST-01-BLR-STG-1	MS1/2	ESP, FGDS, LNB, SCR	Electrostatic Precipitator, Flue Gas Desulfurization System, Low NOX Burner, Selected Catalytic Reduction	Unit 1 Boiler	PC Boiler Unit 1 Exhaust, Chromium (Coal)	236	8000	8672	4.005	lb/TBtu	AP-42, Table 1.1-16, 5th Ed 9/98	-	0.019	0.08	0.023	0.10	NA	0.02	0.10
MTST-01-BLR-STG-1	MS1/2	ESP, FGDS, LNB, SCR	Electrostatic Precipitator, Flue Gas Desulfurization System, Low NOX Burner, Selected Catalytic Reduction	Unit 1 Boiler	PC Boiler Unit 1 Exhaust, Manganese (Coal)	236	8000	8672	5.047	lb/TBtu	AP-42, Table 1.1-16, 5th Ed 9/98	-	0.024	0.10	0.029	0.13	NA	0.03	0.13
MTST-01-BLR-STG-1	MS1/2	ESP, FGDS, LNB, SCR	Electrostatic Precipitator, Flue Gas Desulfurization System, Low NOX Burner, Selected Catalytic Reduction	Unit 1 Boiler	PC Boiler Unit 1 Exhaust, Nickel (Coal)	236	8000	8672	4.698	lb/TBtu	AP-42, Table 1.1-16, 5th Ed 9/98	-	0.022	0.09	0.027	0.12	NA	0.03	0.12
MTST-01-BLR-STG-1	MS1/2	ESP, FGDS, LNB, SCR	Electrostatic Precipitator, Flue Gas Desulfurization System, Low NOX Burner, Selected Catalytic Reduction	Unit 1 Boiler	PC Boiler Unit 1 Exhaust, Hydrogen Chloride (Coal)	236	8000	8672	1.2	lb/ton	AP-42; Table 1.1-15, 5th Ed 5/98	95%	12	46.84	283	1227	NA	14.15	61.37

Mount Storm Power Station
Emission Calculations for: MS1&2(Unit1)

Emission Unit ID	Emission Point ID	Pollution Contro Devicel ID	Pollution Control Device Description	Source ID #	Source Description	Full Load Thruput (tph)	Typical Eq. Full Load Hours	Max. Hours	Emission Factor	Emission Factor Units	Emission Factor Source	Control Efficiency	Actual Emissions (lb/hr)	Actual Emissions (TPY)	Maximum Uncontrolled (lb/hr)	Maximum Uncontrolled (TPY)	Permit Limit (lb/hr)	Potential Emissions (lb/hr)	Potential Emissions (TPY)
MTST-01-BLR-STG-1	MS1/2	ESP, FGDS, LNB, SCR	Electrostatic Precipitator, Flue Gas Desulfurization System, Low NOX Burner, Selected Catalytic Reduction	Unit 1 Boiler	PC Boiler Unit 1 Exhaust, Hydrogen Fluoride (Coal)	236	8000	8672	0.15	lb/ton	AP-42; Table 1.1-15, 5th Ed 5/98	95%	1	5.85	35	153	NA	1.77	7.67
MTST-01-BLR-STG-1	MS1/2	ESP, FGDS, LNB, SCR	Electrostatic Precipitator, Flue Gas Desulfurization System, Low NOX Burner, Selected Catalytic Reduction	Unit 1 Boiler	PC Boiler Unit 1 Exhaust, Sulfuric Acid Mist (Coal)	236	8000	8672	0.862	lb/ton	Southern Company Method 2005 Revision	88%	20	80.75	203	882	NA	24.40	105.79
MTST-01-BLR-STG-1	MS1/2	ESP, FGDS, LNB, SCR	Electrostatic Precipitator, Flue Gas Desulfurization System, Low NOX Burner, Selected Catalytic Reduction	Unit 1 Boiler	PC Boiler Unit 1 Exhaust, Mercury (Coal)	236	8000	8672	0.22	ppm Hg	% Release x Mercury in Coal x Coal Consumed (3)	81%	1.89E-04	0.0008	2.28E-04	9.90E-04	NA	0.00	0.000
MTST-01-BLR-STG-1	MS1/2	ESP, FGDS, LNB, SCR	Electrostatic Precipitator, Flue Gas Desulfurization System, Low NOX Burner, Selected Catalytic Reduction	Unit 1 Boiler	PC Boiler Unit 1 Exhaust, Selenium (Coal)	236	8000	8672	0.001	lb/ton	AP-42, Table 1.1-18, 5th Ed 9/98	0.00	0.25	1.01	0.31	1.33	NA	0.31	1.33
MTST-01-BLR-STG-1	MS1/2	ESP, FGDS, LNB, SCR	Electrostatic Precipitator, Flue Gas Desulfurization System, Low NOX Burner, Selected Catalytic Reduction	Unit 1 Boiler	PC Boiler Unit 1 Exhaust, Cadmium (Coal)	236	8000	8672	0.555	lb/TBtu	AP-42, Table 1.1-16, 5th Ed 9/98	-	0.003	0.01	0.003	0.01	NA	0.00	0.01
MTST-01-BLR-STG-1	MS1/2	ESP, FGDS, LNB, SCR	Electrostatic Precipitator, Flue Gas Desulfurization System, Low NOX Burner, Selected Catalytic Reduction	Unit 1 Boiler	PC Boiler Unit 1 Exhaust, Arsenic (Coal)	236	8000	8672	8.800	lb/TBtu	AP-42, Table 1.1-16, 5th Ed 9/98	-	0.042	0.17	0.051	0.22	NA	0.05	0.22
MTST-01-BLR-STG-1	MS1/2	ESP, FGDS, LNB, SCR	Electrostatic Precipitator, Flue Gas Desulfurization System, Low NOX Burner, Selected Catalytic Reduction	Unit 1 Boiler	PC Boiler Unit 1 Exhaust, Beryllium (Coal)	236	8000	8672	0.087	lb/TBtu	AP-42, Table 1.1-16, 5th Ed 9/98	-	0.000	0.00	0.001	0.00	NA	0.00	0.002
MTST-01-BLR-STG-1	MS1/2	ESP, FGDS, LNB, SCR	Electrostatic Precipitator, Flue Gas Desulfurization System, Low NOX Burner, Selected Catalytic Reduction	Unit 1 Boiler	PC Boiler Unit 1 Exhaust, CO (Fuel Oil)	41,279 (4)	7	88	5.0	lb/kgal	AP-42, Table 1.3-1, 5th edition	-	172	0.60	206	9.08	NA	206.39	9
MTST-01-BLR-STG-1	MS1/2	ESP, FGDS, LNB, SCR	Electrostatic Precipitator, Flue Gas Desulfurization System, Low NOX Burner, Selected Catalytic Reduction	Unit 1 Boiler	PC Boiler Unit 1 Exhaust, NOX (Fuel Oil)	41,279 (4)	7	88	-	-	Included in Coal CEMS data	-	-	-	-	-	-	-	-
MTST-01-BLR-STG-1	MS1/2	ESP, FGDS, LNB, SCR	Electrostatic Precipitator, Flue Gas Desulfurization System, Low NOX Burner, Selected Catalytic Reduction	Unit 1 Boiler	PC Boiler Unit 1 Exhaust, Lead (Fuel Oil)	41,279 (4)	7	88	9.0	lb/TBtu	AP-42, Table 1.3-10, 5th Ed 9/98	-	0.043	0.00015	0.052	0.0023	NA	0.052	0.0023
MTST-01-BLR-STG-1	MS1/2	ESP, FGDS, LNB, SCR	Electrostatic Precipitator, Flue Gas Desulfurization System, Low NOX Burner, Selected Catalytic Reduction	Unit 1 Boiler	PC Boiler Unit 1 Exhaust, PM (Fuel Oil)	41,279 (4)	7	88	2.0	lb/kgal	AP-42, Table 1.3-1, 5th edition	-	83	0.29	83	3.63	NA	82.56	4

Mount Storm Power Station
Emission Calculations for: MS1&2(Unit1)

Emission Unit ID	Emission Point ID	Pollution Contro Device ID	Pollution Control Device Description	Source ID #	Source Description	Full Load Thruput (tph)	Typical Eq. Full Load Hours	Max. Hours	Emission Factor	Emission Factor Units	Emission Factor Source	Control Efficiency	Actual Emissions (lb/hr)	Actual Emissions (TPY)	Maximum Uncontrolled (lb/hr)	Maximum Uncontrolled (TPY)	Permit Limit (lb/hr)	Potential Emissions (lb/hr)	Potential Emissions (TPY)
MTST-01-BLR-STG-1	MS1/2	ESP, FGDS, LNB, SCR	Electrostatic Precipitator, Flue Gas Desulfurization System, Low NOX Burner, Selected Catalytic Reduction	Unit 1 Boiler	PC Boiler Unit 1 Exhaust, PM10 (Fuel Oil)	41,279 (4)	7	88	2.0	lb/kgal	AP-42, Table 1.3-1, 5th edition	-	83	0.29	83	3.63	NA	82.56	4
MTST-01-BLR-STG-1	MS1/2	ESP, FGDS, LNB, SCR	Electrostatic Precipitator, Flue Gas Desulfurization System, Low NOX Burner, Selected Catalytic Reduction	Unit 1 Boiler	PC Boiler Unit 1 Exhaust, SO2 (Fuel Oil)	41,279 (4)	7	88	-	-	Included in Coal CEMS data	-	-	-	-	-	-	-	-
MTST-01-BLR-STG-1	MS1/2	ESP, FGDS, LNB, SCR	Electrostatic Precipitator, Flue Gas Desulfurization System, Low NOX Burner, Selected Catalytic Reduction	Unit 1 Boiler	PC Boiler Unit 1 Exhaust, VOC (Fuel Oil)	41,279 (4)	7	88	0.2	lb/kgal	FIRE	-	7	0.02	8	0.36	NA	8.26	0.4
MTST-01-BLR-STG-1	MS1/2	ESP, FGDS, LNB, SCR	Electrostatic Precipitator, Flue Gas Desulfurization System, Low NOX Burner, Selected Catalytic Reduction	Unit 1 Boiler	PC Boiler Unit 1 Exhaust, Chromium (Fuel Oil)	41,279 (4)	7	88	3.0	lb/kgal	AP-42, Table 1.3-10, 5th Ed 9/98	-	103	0.36	124	5.45	NA	123.84	5
MTST-01-BLR-STG-1	MS1/2	ESP, FGDS, LNB, SCR	Electrostatic Precipitator, Flue Gas Desulfurization System, Low NOX Burner, Selected Catalytic Reduction	Unit 1 Boiler	PC Boiler Unit 1 Exhaust, Manganese (Fuel Oil)	41,279 (4)	7	88	6.0	lb/TBtu	AP-42, Table 1.3-10, 5th Ed 9/98	-	0.029	0.00010	0.035	0.0015	NA	0.035	0.0015
MTST-01-BLR-STG-1	MS1/2	ESP, FGDS, LNB, SCR	Electrostatic Precipitator, Flue Gas Desulfurization System, Low NOX Burner, Selected Catalytic Reduction	Unit 1 Boiler	PC Boiler Unit 1 Exhaust, Nickel (Fuel Oil)	41,279 (4)	7	88	3.0	lb/TBtu	AP-42, Table 1.3-10, 5th Ed 9/98	-	0.014	0.00005	0.017	0.0008	NA	0.017	0.0008
MTST-01-BLR-STG-1	MS1/2	ESP, FGDS, LNB, SCR	Electrostatic Precipitator, Flue Gas Desulfurization System, Low NOX Burner, Selected Catalytic Reduction	Unit 1 Boiler	PC Boiler Unit 1 Exhaust, Sulfuric Acid Mist (Fuel Oil)	41,279 (4)	7	88	4.42E-01	lb/kgal	Southern Company Method 2005 Revision	88%	15	5.32E-02	18	8.03E-01	NA	2.19	9.63E-02
MTST-01-BLR-STG-1	MS1/2	ESP, FGDS, LNB, SCR	Electrostatic Precipitator, Flue Gas Desulfurization System, Low NOX Burner, Selected Catalytic Reduction	Unit 1 Boiler	PC Boiler Unit 1 Exhaust, Mercury (Fuel Oil)	41,279 (4)	7	88	3.0	lb/TBtu	AP-42, Table 1.3-10, 5th Ed 9/98	-	0.014	0.00005	0.017	0.0008	NA	0.017	0.0008
MTST-01-BLR-STG-1	MS1/2	ESP, FGDS, LNB, SCR	Electrostatic Precipitator, Flue Gas Desulfurization System, Low NOX Burner, Selected Catalytic Reduction	Unit 1 Boiler	PC Boiler Unit 1 Exhaust, Selenium (Fuel Oil)	41,279 (4)	7	88	15.0	lb/TBtu	AP-42, Table 1.3-10, 5th Ed 9/98	-	0.072	0.00025	0.087	0.0038	NA	0.087	0.0038
MTST-01-BLR-STG-1	MS1/2	ESP, FGDS, LNB, SCR	Electrostatic Precipitator, Flue Gas Desulfurization System, Low NOX Burner, Selected Catalytic Reduction	Unit 1 Boiler	PC Boiler Unit 1 Exhaust, Cadmium (Fuel Oil)	41,279 (4)	7	88	3.0	lb/TBtu	AP-42, Table 1.3-10, 5th Ed 9/98	-	0.014	0.00005	0.017	0.0008	NA	0.017	0.0008

Mount Storm Power Station
Emission Calculations for: MS1&2(Unit1)

Emission Unit ID	Emission Point ID	Pollution Contro Devicel ID	Pollution Control Device Description	Source ID #	Source Description	Full Load Thruput (tph)	Typical Eq. Full Load Hours	Max. Hours	Emission Factor	Emission Factor Units	Emission Factor Source	Control Efficiency	Actual Emissions (lb/hr)	Actual Emissions (TPY)	Maximum Uncontrolled (lb/hr)	Maximum Uncontrolled (TPY)	Permit Limit (lb/hr)	Potential Emissions (lb/hr)	Potential Emissions (TPY)
MTST-01-BLR-STG-1	MS1/2	ESP, FGDS, LNB, SCR	Electrostatic Precipitator, Flue Gas Desulfurization System, Low NOX Burner, Selected Catalytic Reduction	Unit 1 Boiler	PC Boiler Unit 1 Exhaust, Arsenic (Fuel Oil)	41,279 (4)	7	88	4.0	lb/TBtu	AP-42, Table 1.3-10, 5th Ed 9/98	-	0.019	0.00007	0.023	0.0010	NA	0.023	0.0010
MTST-01-BLR-STG-1	MS1/2	ESP, FGDS, LNB, SCR	Electrostatic Precipitator, Flue Gas Desulfurization System, Low NOX Burner, Selected Catalytic Reduction	Unit 1 Boiler	PC Boiler Unit 1 Exhaust, Beryllium (Fuel Oil)	41,279 (4)	7	88	3.0	lb/TBtu	AP-42, Table 1.3-10, 5th Ed 9/98	-	0.014	0.00005	0.017	0.0008	NA	0.017	0.0008

Notes:

(1) Emission factor includes control.
(2) CEMS emission factors are based on 2008 data and include both emissions from coal and fuel oil.
(3) Concentration of Mercury in Coal from 1999 ICR Project (ppm).
(4) In units of gallons per hour.
Input data used in the emission calculations is provided below:

Description (Unit 1)	Value	Units	Comment
Unit Capacity	5,779	MMBtu/hr	Designed Capacity
Heating Value of Coal	12,250	Btu/lb	Average from 2008 data
Heating Value of Fuel Oil	140,000	Btu/gal	Lower Heating Value
Full load throughput of Coal	236	tons / hr	Calculated as a function of unit capacity and fuel heating value.
Full load throughput of Fuel Oil	41,279	gal/hr	Calculated as a function of unit capacity and fuel heating value.
Annual Coal Consumed	1,561,313	TPY	Throughput is for both Units and is based on 2008 data
Annual Fuel Oil Consumed	240,633	gal/yr	Throughput is for both Units and is based on 2008 data
Annual NOx Emissions	1,339	TPY	Throughput is for both Units and is based on 2008 data
Annual SO2 Emissions	933	TPY	Throughput is for both Units and is based on 2008 data
NOx Emission Factor $_{Coal}$	0.070	lb/MMBtu	Calculated based on 2008 CAMS data.
SO2 Emission Factor $_{Coal}$	0.049	lb/MMBtu	Calculated based on 2008 CAMS data.
Lead Concentration $_{Coal}$	8.100	ppm	Calculated based on 3.4 * (C/A * PM)^0.80, where: C = Metal Concentration of BP, and A equals Ash weight factor. AP-42, Table 1.1-16, 5th Ed 9/98
Chromium Emission Factor $_{Coal}$	15.000	ppm	Calculated based on 3.7 * (C/A * PM)^0.58, where: C = Metal Concentration of BP, and A equals Ash weight factor. AP-42, Table 1.1-16, 5th Ed 9/98
Manganese Emission Factor $_{Coal}$	21.000	ppm	Calculated based on 3.8 * (C/A * PM)^0.60, where: C = Metal Concentration of BP, and A equals Ash weight factor. AP-42, Table 1.1-16, 5th Ed 9/98
Nickel Emission Factor $_{Coal}$	15.000	ppm	Calculated based on 4.4 * (C/A * PM)^0.48, where: C = Metal Concentration of BP, and A equals Ash weight factor. AP-42, Table 1.1-16, 5th Ed 9/98
Cadmium Emission Factor $_{Coal}$	0.370	ppm	Calculated based on 3.3 * (C/A * PM)^0.5, where: C = Metal Concentration of BP, and A equals Ash weight factor. AP-42, Table 1.1-16, 5th Ed 9/98
Arsenic Emission Factor $_{Coal}$	8.800	ppm	Calculated based on 3.1 * (C/A * PM)^0.85, where: C = Metal Concentration of BP, and A equals Ash weight factor. AP-42, Table 1.1-16, 5th Ed 9/98
Berylium Emission Factor $_{Coal}$	1.200	ppm	Calculated based on 1.2 * (C/A * PM)^1.1, where: C = Metal Concentration of BP, and A equals Ash weight factor. AP-42, Table 1.1-16, 5th Ed 9/98
% Hg Released from Coal	0.22	%	% released is from 2001 EPA Hg Guidance
Ash Weight Fraction	0.1309	%	Based on 2008 data.
Hours of Operation Total	8,000	hr/yr	Based on 2008 data.
Hours of Operation Coal	7,993	hr/yr	Total Hours minus Fuel Oil Hours
Hours of Operation Fuel Oil	7	hr/yr	Based on 2008 data.

Mount Storm Power Station
Emission Calculations for: MS1&2(Unit2)

Emission Unit ID	Emission Point ID	Pollution Contro Devicel ID	Pollution Control Device Description	Source ID #	Source Description	Full Load Thruput (tph)	Typical Eq. Full Load Hours	Max. Hours	Emission Factor	Emission Factor Units	Emission Factor Source	Control Efficiency	Actual Emissions (lb/hr)	Actual Emissions (TPY)	Maximum Uncontrolled (lb/hr)	Maximum Uncontrolled (TPY)	Permit Limit (lb/hr)	Potential Emissions (lb/hr)	Potential Emissions (TPY)
MTST-02-BLR-STG-1	MS1/2	ESP, FGDS, LNB, SCR	Electrostatic Precipitator, Flue Gas Desulfurization System, Low NOX Burner, Selected Catalytic Reduction	Unit 2 Boiler	PC Boiler Unit 2 Exhaust, CO (Coal)	236	8463	8672	0.0111	lb/MMBtu	Stack Test (1)	-	48.50	205	64	278	866.85	866.85	3759
MTST-02-BLR-STG-1	MS1/2	ESP, FGDS, LNB, SCR	Electrostatic Precipitator, Flue Gas Desulfurization System, Low NOX Burner, Selected Catalytic Reduction	Unit 2 Boiler	PC Boiler Unit 2 Exhaust, NOX (Coal)	236	8463	8672	0.07	lb/MMBtu	CEMS (1) (2)	-	303.78	1285	402	1742	NA	401.80	1742
MTST-02-BLR-STG-1	MS1/2	ESP, FGDS, LNB, SCR	Electrostatic Precipitator, Flue Gas Desulfurization System, Low NOX Burner, Selected Catalytic Reduction	Unit 2 Boiler	PC Boiler Unit 2 Exhaust, Lead (Coal)	236	8463	8672	2.30	lb/TBtu	Stack Test (1)	-	0.010	0.043	0.013	0.06	NA	0.01	0.06
MTST-02-BLR-STG-1	MS1/2	ESP, FGDS, LNB, SCR	Electrostatic Precipitator, Flue Gas Desulfurization System, Low NOX Burner, Selected Catalytic Reduction	Unit 2 Boiler	PC Boiler Unit 2 Exhaust, PM (Coal)	236	8463	8672	0.010	lb/MMBtu	Stack Test (1)	99.81%	43.69	185	58	251	288.95	288.95	1253
MTST-02-BLR-STG-1	MS1/2	ESP, FGDS, LNB, SCR	Electrostatic Precipitator, Flue Gas Desulfurization System, Low NOX Burner, Selected Catalytic Reduction	Unit 2 Boiler	PC Boiler Unit 2 Exhaust, PM10 (Coal)	236	8463	8672	0.007	lb/MMBtu	Ratio of PM Stack test, AP-42, 1.1-6, Scrubber	99.81%	30.58	129	40	175	173.37	173.37	752
MTST-02-BLR-STG-1	MS1/2	ESP, FGDS, LNB, SCR	Electrostatic Precipitator, Flue Gas Desulfurization System, Low NOX Burner, Selected Catalytic Reduction	Unit 2 Boiler	PC Boiler Unit 2 Exhaust, SO2 (Coal)	236	8463	8672	0.05	lb/MMBtu	CEMS (1) (2)	95%	211.79	896	280	1215	15603	15603.3	67656
MTST-02-BLR-STG-1	MS1/2	ESP, FGDS, LNB, SCR	Electrostatic Precipitator, Flue Gas Desulfurization System, Low NOX Burner, Selected Catalytic Reduction	Unit 2 Boiler	PC Boiler Unit 2 Exhaust, VOC (Coal)	236	8463	8672	0.002	lb/MMBtu	AP-42, Table 1.1-19, 5th edition	-	10.70	45.28	14.15	61.37	NA	14.15	61
MTST-02-BLR-STG-1	MS1/2	ESP, FGDS, LNB, SCR	Electrostatic Precipitator, Flue Gas Desulfurization System, Low NOX Burner, Selected Catalytic Reduction	Unit 2 Boiler	PC Boiler Unit 2 Exhaust, Chromium (Coal)	236	8463	8672	3.988	lb/TBtu	AP-42, Table 1.1-16, 5th Ed 9/98	-	0.017	0.07	0.023	0.10	NA	0.02	0.10
MTST-02-BLR-STG-1	MS1/2	ESP, FGDS, LNB, SCR	Electrostatic Precipitator, Flue Gas Desulfurization System, Low NOX Burner, Selected Catalytic Reduction	Unit 2 Boiler	PC Boiler Unit 2 Exhaust, Manganese (Coal)	236	8463	8672	5.025	lb/TBtu	AP-42, Table 1.1-16, 5th Ed 9/98	-	0.022	0.09	0.029	0.13	NA	0.03	0.13
MTST-02-BLR-STG-1	MS1/2	ESP, FGDS, LNB, SCR	Electrostatic Precipitator, Flue Gas Desulfurization System, Low NOX Burner, Selected Catalytic Reduction	Unit 2 Boiler	PC Boiler Unit 2 Exhaust, Nickel (Coal)	236	8463	8672	4.682	lb/TBtu	AP-42, Table 1.1-16, 5th Ed 9/98	-	0.020	0.09	0.027	0.12	NA	0.03	0.12
MTST-02-BLR-STG-1	MS1/2	ESP, FGDS, LNB, SCR	Electrostatic Precipitator, Flue Gas Desulfurization System, Low NOX Burner, Selected Catalytic Reduction	Unit 2 Boiler	PC Boiler Unit 2 Exhaust, Hydrogen Chloride (Coal)	236	8463	8672	1.2	lb/ton	AP-42; Table 1.1-15, 5th Ed 5/98	95%	11	45.28	283	1227	NA	14.15	61.37
MTST-02-BLR-STG-1	MS1/2	ESP, FGDS, LNB, SCR	Electrostatic Precipitator, Flue Gas Desulfurization System, Low NOX Burner, Selected Catalytic Reduction	Unit 2 Boiler	PC Boiler Unit 2 Exhaust, Hydrogen Fluoride (Coal)	236	8463	8672	0.15	lb/ton	AP-42; Table 1.1-15, 5th Ed 5/98	95%	1	5.66	35	153	NA	1.77	7.67

Mount Storm Power Station
Emission Calculations for: MS1&2(Unit2)

Emission Unit ID	Emission Point ID	Pollution Contro Devicel ID	Pollution Control Device Description	Source ID #	Source Description	Full Load Thruput (tph)	Typical Eq. Full Load Hours	Max. Hours	Emission Factor	Emission Factor Units	Emission Factor Source	Control Efficiency	Actual Emissions (lb/hr)	Actual Emissions (TPY)	Maximum Uncontrolled (lb/hr)	Maximum Uncontrolled (TPY)	Permit Limit (lb/hr)	Potential Emissions (lb/hr)	Potential Emissions (TPY)
MTST-02-BLR-STG-1	MS1/2	ESP, FGDS, LNB, SCR	Electrostatic Precipitator, Flue Gas Desulfurization System, Low NOX Burner, Selected Catalytic Reduction	Unit 2 Boiler	PC Boiler Unit 2 Exhaust, Sulfuric Acid Mist (Coal)	236	8463	8672	0.862	lb/ton	Southern Company Method 2005 Revision	88%	18	78.06	203	882	NA	24.40	105.79
MTST-02-BLR-STG-1	MS1/2	ESP, FGDS, LNB, SCR	Electrostatic Precipitator, Flue Gas Desulfurization System, Low NOX Burner, Selected Catalytic Reduction	Unit 2 Boiler	PC Boiler Unit 2 Exhaust, Mercury (Coal)	236	8463	8672	0.22	ppm Hg	% Release x Mercury in Coal x Coal Consumed (3)	81%	1.73E-04	0.0007	2.28E-04	9.90E-04	NA	0.00	0.001
MTST-02-BLR-STG-1	MS1/2	ESP, FGDS, LNB, SCR	Electrostatic Precipitator, Flue Gas Desulfurization System, Low NOX Burner, Selected Catalytic Reduction	Unit 2 Boiler	PC Boiler Unit 2 Exhaust, Selenium (Coal)	236	8463	8672	0.001	lb/ton	AP-42, Table 1.1-18, 5th Ed 9/98	0.00	0.23	0.98	0.31	1.33	NA	0.31	1.33
MTST-02-BLR-STG-1	MS1/2	ESP, FGDS, LNB, SCR	Electrostatic Precipitator, Flue Gas Desulfurization System, Low NOX Burner, Selected Catalytic Reduction	Unit 2 Boiler	PC Boiler Unit 2 Exhaust, Cadmium (Coal)	236	8463	8672	0.553	lb/TBtu	AP-42, Table 1.1-16, 5th Ed 9/98	-	0.002	0.01	0.003	0.01	NA	0.00	0.01
MTST-02-BLR-STG-1	MS1/2	ESP, FGDS, LNB, SCR	Electrostatic Precipitator, Flue Gas Desulfurization System, Low NOX Burner, Selected Catalytic Reduction	Unit 2 Boiler	PC Boiler Unit 2 Exhaust, Arsenic (Coal)	236	8463	8672	8.800	lb/TBtu	AP-42, Table 1.1-16, 5th Ed 9/98	-	0.038	0.16	0.051	0.22	NA	0.05	0.22
MTST-02-BLR-STG-1	MS1/2	ESP, FGDS, LNB, SCR	Electrostatic Precipitator, Flue Gas Desulfurization System, Low NOX Burner, Selected Catalytic Reduction	Unit 2 Boiler	PC Boiler Unit 2 Exhaust, Beryllium (Coal)	236	8463	8672	0.086	lb/TBtu	AP-42, Table 1.1-16, 5th Ed 9/98	-	0.000	0.00	0.000	0.00	NA	0.00	0.002
MTST-02-BLR-STG-1	MS1/2	ESP, FGDS, LNB, SCR	Electrostatic Precipitator, Flue Gas Desulfurization System, Low NOX Burner, Selected Catalytic Reduction	Unit 2 Boiler	PC Boiler Unit 2 Exhaust, CO (Fuel Oil)	41,279 (4)	5	88	5.0	lb/kgal	AP-42, Table 1.3-1, 5th edition	-	153	0.38	206	9.08	NA	206.39	9
MTST-02-BLR-STG-1	MS1/2	ESP, FGDS, LNB, SCR	Electrostatic Precipitator, Flue Gas Desulfurization System, Low NOX Burner, Selected Catalytic Reduction	Unit 2 Boiler	PC Boiler Unit 2 Exhaust, NOX (Fuel Oil)	41,279 (4)	5	88	-	-	Included in Coal CEMS data	-	-	-	-	-	-	-	-
MTST-02-BLR-STG-1	MS1/2	ESP, FGDS, LNB, SCR	Electrostatic Precipitator, Flue Gas Desulfurization System, Low NOX Burner, Selected Catalytic Reduction	Unit 2 Boiler	PC Boiler Unit 2 Exhaust, Lead (Fuel Oil)	41,279 (4)	5	88	9.0	lb/TBtu	AP-42, Table 1.3-10, 5th Ed 9/98	-	0.039	0.00010	0.052	0.0023	NA	0.052	0.0023
MTST-02-BLR-STG-1	MS1/2	ESP, FGDS, LNB, SCR	Electrostatic Precipitator, Flue Gas Desulfurization System, Low NOX Burner, Selected Catalytic Reduction	Unit 2 Boiler	PC Boiler Unit 2 Exhaust, PM (Fuel Oil)	41,279 (4)	5	88	2.0	lb/kgal	AP-42, Table 1.3-1, 5th edition	-	83	0.21	83	3.63	NA	82.56	4
MTST-02-BLR-STG-1	MS1/2	ESP, FGDS, LNB, SCR	Electrostatic Precipitator, Flue Gas Desulfurization System, Low NOX Burner, Selected Catalytic Reduction	Unit 2 Boiler	PC Boiler Unit 2 Exhaust, PM10 (Fuel Oil)	41,279 (4)	5	88	2.0	lb/kgal	AP-42, Table 1.3-1, 5th edition	-	83	0.21	83	3.63	NA	82.56	4
MTST-02-BLR-STG-1	MS1/2	ESP, FGDS, LNB, SCR	Electrostatic Precipitator, Flue Gas Desulfurization System, Low NOX Burner, Selected Catalytic Reduction	Unit 2 Boiler	PC Boiler Unit 2 Exhaust, SO2 (Fuel Oil)	41,279 (4)	5	88	-	-	Included in Coal CEMS data	-	-	-	-	-	-	-	-

Mount Storm Power Station
Emission Calculations for: MS1&2(Unit2)

Emission Unit ID	Emission Point ID	Pollution Contro Devicel ID	Pollution Control Device Description	Source ID #	Source Description	Full Load Thruput (tph)	Typical Eq. Full Load Hours	Max. Hours	Emission Factor	Emission Factor Units	Emission Factor Source	Control Efficiency	Actual Emissions (lb/hr)	Actual Emissions (TPY)	Maximum Uncontrolled (lb/hr)	Maximum Uncontrolled (TPY)	Permit Limit (lb/hr)	Potential Emissions (lb/hr)	Potential Emissions (TPY)
MTST-02-BLR-STG-1	MS1/2	ESP, FGDS, LNB, SCR	Electrostatic Precipitator, Flue Gas Desulfurization System, Low NOX Burner, Selected Catalytic Reduction	Unit 2 Boiler	PC Boiler Unit 2 Exhaust, VOC (Fuel Oil)	41,279 (4)	5	88	0.2	lb/kgal	FIRE	-	6	0.02	8	0.36	NA	8.26	0.4
MTST-02-BLR-STG-1	MS1/2	ESP, FGDS, LNB, SCR	Electrostatic Precipitator, Flue Gas Desulfurization System, Low NOX Burner, Selected Catalytic Reduction	Unit 2 Boiler	PC Boiler Unit 2 Exhaust, Chromium (Fuel Oil)	41,279 (4)	5	88	3.0	lb/kgal	AP-42, Table 1.3-10, 5th Ed 9/98	-	92	0.23	124	5.45	NA	123.84	5
MTST-02-BLR-STG-1	MS1/2	ESP, FGDS, LNB, SCR	Electrostatic Precipitator, Flue Gas Desulfurization System, Low NOX Burner, Selected Catalytic Reduction	Unit 2 Boiler	PC Boiler Unit 2 Exhaust, Manganese (Fuel Oil)	41,279 (4)	5	88	6.0	lb/TBtu	AP-42, Table 1.3-10, 5th Ed 9/98	-	0.026	0.00006	0.035	0.0015	NA	0.035	0.0015
MTST-02-BLR-STG-1	MS1/2	ESP, FGDS, LNB, SCR	Electrostatic Precipitator, Flue Gas Desulfurization System, Low NOX Burner, Selected Catalytic Reduction	Unit 2 Boiler	PC Boiler Unit 2 Exhaust, Nickel (Fuel Oil)	41,279 (4)	5	88	3.0	lb/TBtu	AP-42, Table 1.3-10, 5th Ed 9/98	-	0.013	0.00003	0.017	0.0008	NA	0.017	0.0008
MTST-02-BLR-STG-1	MS1/2	ESP, FGDS, LNB, SCR	Electrostatic Precipitator, Flue Gas Desulfurization System, Low NOX Burner, Selected Catalytic Reduction	Unit 2 Boiler	PC Boiler Unit 2 Exhaust, Sulfuric Acid Mist (Fuel Oil)	41,279 (4)	5	88	4.42E-01	lb/kgal	Southern Company Method 2005 Revision	88%	14	3.39E-02	18	8.03E-01	NA	1.82E+01	8.03E-01
MTST-02-BLR-STG-1	MS1/2	ESP, FGDS, LNB, SCR	Electrostatic Precipitator, Flue Gas Desulfurization System, Low NOX Burner, Selected Catalytic Reduction	Unit 2 Boiler	PC Boiler Unit 2 Exhaust, Mercury (Fuel Oil)	41,279 (4)	5	88	3.0	lb/TBtu	AP-42, Table 1.3-10, 5th Ed 9/98	-	0.013	0.00003	0.017	0.0008	NA	0.017	0.0008
MTST-02-BLR-STG-1	MS1/2	ESP, FGDS, LNB, SCR	Electrostatic Precipitator, Flue Gas Desulfurization System, Low NOX Burner, Selected Catalytic Reduction	Unit 2 Boiler	PC Boiler Unit 2 Exhaust, Selenium (Fuel Oil)	41,279 (4)	5	88	15.0	lb/TBtu	AP-42, Table 1.3-10, 5th Ed 9/98	-	0.064	0.00016	0.087	0.0038	NA	0.087	0.0038
MTST-02-BLR-STG-1	MS1/2	ESP, FGDS, LNB, SCR	Electrostatic Precipitator, Flue Gas Desulfurization System, Low NOX Burner, Selected Catalytic Reduction	Unit 2 Boiler	PC Boiler Unit 2 Exhaust, Cadmium (Fuel Oil)	41,279 (4)	5	88	3.0	lb/TBtu	AP-42, Table 1.3-10, 5th Ed 9/98	-	0.013	0.00003	0.017	0.0008	NA	0.017	0.0008

Mount Storm Power Station
Emission Calculations for: MS1&2(Unit2)

Emission Unit ID	Emission Point ID	Pollution Contro Devicel ID	Pollution Control Device Description	Source ID #	Source Description	Full Load Thruput (tph)	Typical Eq. Full Load Hours	Max. Hours	Emission Factor	Emission Factor Units	Emission Factor Source	Control Efficiency	Actual Emissions (lb/hr)	Actual Emissions (TPY)	Maximum Uncontrolled (lb/hr)	Maximum Uncontrolled (TPY)	Permit Limit (lb/hr)	Potential Emissions (lb/hr)	Potential Emissions (TPY)
MTST-02-BLR-STG-1	MS1/2	ESP, FGDS, LNB, SCR	Electrostatic Precipitator, Flue Gas Desulfurization System, Low NOX Burner, Selected Catalytic Reduction	Unit 2 Boiler	PC Boiler Unit 2 Exhaust, Arsenic (Fuel Oil)	41,279 (4)	5	88	4.0	lb/TBtu	AP-42, Table 1.3-10, 5th Ed 9/98	-	0.017	0.00004	0.023	0.0010	NA	0.023	0.0010
MTST-02-BLR-STG-1	MS1/2	ESP, FGDS, LNB, SCR	Electrostatic Precipitator, Flue Gas Desulfurization System, Low NOX Burner, Selected Catalytic Reduction	Unit 2 Boiler	PC Boiler Unit 2 Exhaust, Beryllium (Fuel Oil)	41,279 (4)	5	88	3.0	lb/TBtu	AP-42, Table 1.3-10, 5th Ed 9/98	-	0.013	0.00003	0.017	0.0008	NA	0.017	0.0008

Notes:

(1) Emission factor includes control.
(2) CEMS emission factors are based on 2008 data and include both emissions from coal and fuel oil.
(3) Concentration of Mercury in Coal from 1999 ICR Project (ppm).
(4) In units of gallons per hour.
Input data used in the emission calculations is provided below:

Description (Unit 2)	Value	Units	Comment
Unit Capacity	5,779	MMBtu/hr	Designed Capacity
Heating Value of Coal	12,250	Btu/lb	Average from 2008 data
Heating Value of Fuel Oil	140,000	Btu/gal	Lower Heating Value
Full load throughput of Coal	236	tons / hr	Calculated as a function of unit capacity and fuel heating value.
Full load throughput of Fuel Oil	41,279	gal/hr	Calculated as a function of unit capacity and fuel heating value.
Annual Coal Consumed	1,509,275	TPY	Throughput is for both Units and is based on 2008 data
Annual Fuel Oil Consumed	153,315	gal/yr	Throughput is for both Units and is based on 2008 data
Annual NOx Emissions	1,286	TPY	Throughput is for both Units and is based on 2008 data
Annual SO2 Emissions	897	TPY	Throughput is for both Units and is based on 2008 data
NOx Emission Factor $_{Coal}$	0.070	lb/MMBtu	Calculated based on 2008 CAMS data.
SO2 Emission Factor $_{Coal}$	0.048	lb/MMBtu	Calculated based on 2008 CAMS data.
Lead Concentration $_{Coal}$	8.100	ppm	Calculated based on 3.4 * (C/A * PM)^0.80, where: C = Metal Concentration of BP, and A equals Ash weight factor. AP-42, Table 1.1-16, 5th Ed 9/98
Chromium Emission Factor $_{Coal}$	15.000	ppm	Calculated based on 3.7 * (C/A * PM)^0.58, where: C = Metal Concentration of BP, and A equals Ash weight factor. AP-42, Table 1.1-16, 5th Ed 9/98
Manganese Emission Factor $_{Coal}$	21.000	ppm	Calculated based on 3.8 * (C/A * PM)^0.60, where: C = Metal Concentration of BP, and A equals Ash weight factor. AP-42, Table 1.1-16, 5th Ed 9/98
Nickel Emission Factor $_{Coal}$	15.000	ppm	Calculated based on 4.4 * (C/A * PM)^0.48, where: C = Metal Concentration of BP, and A equals Ash weight factor. AP-42, Table 1.1-16, 5th Ed 9/98
Cadmium Emission Factor $_{Coal}$	0.370	ppm	Calculated based on 3.3 * (C/A * PM)^0.5, where: C = Metal Concentration of BP, and A equals Ash weight factor. AP-42, Table 1.1-16, 5th Ed 9/98
Arsenic Emission Factor $_{Coal}$	8.800	ppm	Calculated based on 3.1 * (C/A * PM)^0.85, where: C = Metal Concentration of BP, and A equals Ash weight factor. AP-42, Table 1.1-16, 5th Ed 9/98
Berylium Emission Factor $_{Coal}$	1.200	ppm	Calculated based on 1.2 * (C/A * PM)^1.1, where: C = Metal Concentration of BP, and A equals Ash weight factor. AP-42, Table 1.1-16, 5th Ed 9/98
% Hg Released from Coal	0.22	%	% released is from 2001 EPA Hg Guidance
Ash Weight Fraction	0.1318	%	Based on 2008 data.
Hours of Operation Total	8,468	hr/yr	Based on 2008 data.
Hours of Operation Coal	8,463	hr/yr	Total Hours minus Fuel Oil Hours
Hours of Operation Fuel Oil	5	hr/yr	Based on 2008 data.

Mount Storm Power Station
Emission Calculations for: MS3(Unit3)

Emission Unit ID	Emission Point ID	Pollution Contro Devicel ID	Pollution Control Device Description	Source ID #	Source Description	Full Load Thruput (tph)	Typical Eq. Full Load Hours	Max. Hours	Emission Factor	Emission Factor Units	Emission Factor Source	Control Efficiency	Actual Emissions (lb/hr)	Actual Emissions (TPY)	Maximum Uncontrolled (lb/hr)	Maximum Uncontrolled (TPY)	Permit Limit (lb/hr)	Potential Emissions (lb/hr)	Potential Emissions (TPY)
MTST-03-BLR-STG-1	MS 3	ESP, FGDS, LNB, SCR	Electrostatic Precipitator, Flue Gas Desulfurization System, Low NOX Burner, Selected Catalytic Reduction	Unit 3 Boiler	PC Boiler Unit 3 Exhaust, CO (Coal)	238	6116	8672	0.0150	lb/MMBtu	Stack Test (1)	-	71.15	218	87	379	866.85	866.85	3759
MTST-03-BLR-STG-1	MS 3	ESP, FGDS, LNB, SCR	Electrostatic Precipitator, Flue Gas Desulfurization System, Low NOX Burner, Selected Catalytic Reduction	Unit 3 Boiler	PC Boiler Unit 3 Exhaust, NOX (Coal)	238	6116	8672	0.09	lb/MMBtu	CEMS (1) (2)	-	437.21	1337	537	2328	NA	536.79	2328
MTST-03-BLR-STG-1	MS 3	ESP, FGDS, LNB, SCR	Electrostatic Precipitator, Flue Gas Desulfurization System, Low NOX Burner, Selected Catalytic Reduction	Unit 3 Boiler	PC Boiler Unit 3 Exhaust, Lead (Coal)	238	6116	8672	2.82	lb/TBtu	Stack Test (1)	-	0.013	0.041	0.016	0.07	NA	0.02	0.07
MTST-03-BLR-STG-1	MS 3	ESP, FGDS, LNB, SCR	Electrostatic Precipitator, Flue Gas Desulfurization System, Low NOX Burner, Selected Catalytic Reduction	Unit 3 Boiler	PC Boiler Unit 3 Exhaust, PM (Coal)	238	6116	8672	0.012	lb/MMBtu	Stack Test (1)	99.81%	58.35	178	72	311	291.2	291.2	1263
MTST-03-BLR-STG-1	MS 3	ESP, FGDS, LNB, SCR	Electrostatic Precipitator, Flue Gas Desulfurization System, Low NOX Burner, Selected Catalytic Reduction	Unit 3 Boiler	PC Boiler Unit 3 Exhaust, PM10 (Coal)	238	6116	8672	0.009	lb/MMBtu	Ratio of PM Stack test, AP-42, 1.1-6, Scrubber	99.81%	40.84	125	50	217	174.72	174.72	758
MTST-03-BLR-STG-1	MS 3	ESP, FGDS, LNB, SCR	Electrostatic Precipitator, Flue Gas Desulfurization System, Low NOX Burner, Selected Catalytic Reduction	Unit 3 Boiler	PC Boiler Unit 3 Exhaust, SO2 (Coal)	238	6116	8672	0.06	lb/MMBtu	CEMS (1) (2)	95%	304.79	932	374	1623	15725	15724.8	68183
MTST-03-BLR-STG-1	MS 3	ESP, FGDS, LNB, SCR	Electrostatic Precipitator, Flue Gas Desulfurization System, Low NOX Burner, Selected Catalytic Reduction	Unit 3 Boiler	PC Boiler Unit 3 Exhaust, VOC (Coal)	238	6116	8672	0.002	lb/MMBtu	AP-42, Table 1.1-19, 5th edition	-	11.62	35.52	14.26	61.84	NA	14.26	62
MTST-03-BLR-STG-1	MS 3	ESP, FGDS, LNB, SCR	Electrostatic Precipitator, Flue Gas Desulfurization System, Low NOX Burner, Selected Catalytic Reduction	Unit 3 Boiler	PC Boiler Unit 3 Exhaust, Chromium (Coal)	238	6116	8672	4.618	lb/TBtu	AP-42, Table 1.1-16, 5th Ed 9/98	-	0.022	0.07	0.027	0.12	NA	0.03	0.12
MTST-03-BLR-STG-1	MS 3	ESP, FGDS, LNB, SCR	Electrostatic Precipitator, Flue Gas Desulfurization System, Low NOX Burner, Selected Catalytic Reduction	Unit 3 Boiler	PC Boiler Unit 3 Exhaust, Manganese (Coal)	238	6116	8672	5.849	lb/TBtu	AP-42, Table 1.1-16, 5th Ed 9/98	-	0.028	0.08	0.034	0.15	NA	0.03	0.15
MTST-03-BLR-STG-1	MS 3	ESP, FGDS, LNB, SCR	Electrostatic Precipitator, Flue Gas Desulfurization System, Low NOX Burner, Selected Catalytic Reduction	Unit 3 Boiler	PC Boiler Unit 3 Exhaust, Nickel (Coal)	238	6116	8672	5.286	lb/TBtu	AP-42, Table 1.1-16, 5th Ed 9/98	-	0.025	0.08	0.031	0.13	NA	0.03	0.13
MTST-03-BLR-STG-1	MS 3	ESP, FGDS, LNB, SCR	Electrostatic Precipitator, Flue Gas Desulfurization System, Low NOX Burner, Selected Catalytic Reduction	Unit 3 Boiler	PC Boiler Unit 3 Exhaust, Hydrogen Chloride (Coal)	238	6116	8672	1.2	lb/ton	AP-42; Table 1.1-15, 5th Ed 5/98	95%	12	35.52	285	1237	NA	14.26	61.84

Mount Storm Power Station
Emission Calculations for: MS3(Unit3)

Emission Unit ID	Emission Point ID	Pollution Contro Devicel ID	Pollution Control Device Description	Source ID #	Source Description	Full Load Thruput (tph)	Typical Eq. Full Load Hours	Max. Hours	Emission Factor	Emission Factor Units	Emission Factor Source	Control Efficiency	Actual Emissions (lb/hr)	Actual Emissions (TPY)	Maximum Uncontrolled (lb/hr)	Maximum Uncontrolled (TPY)	Permit Limit (lb/hr)	Potential Emissions (lb/hr)	Potential Emissions (TPY)
MTST-03-BLR-STG-1	MS 3	ESP, FGDS, LNB, SCR	Electrostatic Precipitator, Flue Gas Desulfurization System, Low NOX Burner, Selected Catalytic Reduction	Unit 3 Boiler	PC Boiler Unit 3 Exhaust, Hydrogen Fluoride (Coal)	238	6116	8672	0.15	lb/ton	AP-42; Table 1.1-15, 5th Ed 5/98	95%	1	4.44	36	155	NA	1.78	7.73
MTST-03-BLR-STG-1	MS 3	ESP, FGDS, LNB, SCR	Electrostatic Precipitator, Flue Gas Desulfurization System, Low NOX Burner, Selected Catalytic Reduction	Unit 3 Boiler	PC Boiler Unit 3 Exhaust, Sulfuric Acid Mist (Coal)	238	6116	8672	0.862	lb/ton	Southern Company Method 2005 Revision	88%	20	61.24	205	888	NA	24.59	106.62
MTST-03-BLR-STG-1	MS 3	ESP, FGDS, LNB, SCR	Electrostatic Precipitator, Flue Gas Desulfurization System, Low NOX Burner, Selected Catalytic Reduction	Unit 3 Boiler	PC Boiler Unit 3 Exhaust, Mercury (Coal)	238	6116	8672	0.22	ppm Hg	% Release x Mercury in Coal x Coal Consumed (3)	81%	1.87E-04	0.0006	2.30E-04	9.98E-04	NA	0.00	0.001
MTST-03-BLR-STG-1	MS 3	ESP, FGDS, LNB, SCR	Electrostatic Precipitator, Flue Gas Desulfurization System, Low NOX Burner, Selected Catalytic Reduction	Unit 3 Boiler	PC Boiler Unit 3 Exhaust, Selenium (Coal)	238	6116	8672	0.001	lb/ton	AP-42, Table 1.1-18, 5th Ed 9/98	0.00	0.25	0.77	0.31	1.34	NA	0.31	1.34
MTST-03-BLR-STG-1	MS 3	ESP, FGDS, LNB, SCR	Electrostatic Precipitator, Flue Gas Desulfurization System, Low NOX Burner, Selected Catalytic Reduction	Unit 3 Boiler	PC Boiler Unit 3 Exhaust, Cadmium (Coal)	238	6116	8672	0.627	lb/TBtu	AP-42, Table 1.1-16, 5th Ed 9/98	-	0.003	0.01	0.004	0.02	NA	0.00	0.02
MTST-03-BLR-STG-1	MS 3	ESP, FGDS, LNB, SCR	Electrostatic Precipitator, Flue Gas Desulfurization System, Low NOX Burner, Selected Catalytic Reduction	Unit 3 Boiler	PC Boiler Unit 3 Exhaust, Arsenic (Coal)	238	6116	8672	8.800	lb/TBtu	AP-42, Table 1.1-16, 5th Ed 9/98	-	0.042	0.13	0.051	0.22	NA	0.05	0.22
MTST-03-BLR-STG-1	MS 3	ESP, FGDS, LNB, SCR	Electrostatic Precipitator, Flue Gas Desulfurization System, Low NOX Burner, Selected Catalytic Reduction	Unit 3 Boiler	PC Boiler Unit 3 Exhaust, Beryllium (Coal)	238	6116	8672	0.114	lb/TBtu	AP-42, Table 1.1-16, 5th Ed 9/98	-	0.001	0.00	0.001	0.00	NA	0.00	0.003
MTST-03-BLR-STG-1	MS 3	ESP, FGDS, LNB, SCR	Electrostatic Precipitator, Flue Gas Desulfurization System, Low NOX Burner, Selected Catalytic Reduction	Unit 3 Boiler	PC Boiler Unit 3 Exhaust, CO (Fuel Oil)	41,600 (4)	9	88	5.0	lb/kgal	AP-42, Table 1.3-1, 5th edition	-	168	0.75	208	9.15	NA	208.00	9
MTST-03-BLR-STG-1	MS 3	ESP, FGDS, LNB, SCR	Electrostatic Precipitator, Flue Gas Desulfurization System, Low NOX Burner, Selected Catalytic Reduction	Unit 3 Boiler	PC Boiler Unit 3 Exhaust, NOX (Fuel Oil)	41,600 (4)	9	88	-	-	Included in Coal CEMS data	-	-	-	-	-	-	-	-
MTST-03-BLR-STG-1	MS 3	ESP, FGDS, LNB, SCR	Electrostatic Precipitator, Flue Gas Desulfurization System, Low NOX Burner, Selected Catalytic Reduction	Unit 3 Boiler	PC Boiler Unit 3 Exhaust, Lead (Fuel Oil)	41,600 (4)	9	88	9.0	lb/TBtu	AP-42, Table 1.3-10, 5th Ed 9/98	-	0.042	0.00019	0.052	0.0023	NA	0.052	0.0023
MTST-03-BLR-STG-1	MS 3	ESP, FGDS, LNB, SCR	Electrostatic Precipitator, Flue Gas Desulfurization System, Low NOX Burner, Selected Catalytic Reduction	Unit 3 Boiler	PC Boiler Unit 3 Exhaust, PM (Fuel Oil)	41,600 (4)	9	88	2.0	lb/kgal	AP-42, Table 1.3-1, 5th edition	-	83	0.37	83	3.66	NA	83.20	4

Mount Storm Power Station
Emission Calculations for: MS3(Unit3)

Emission Unit ID	Emission Point ID	Pollution Contro Devicel ID	Pollution Control Device Description	Source ID #	Source Description	Full Load Thruput (tph)	Typical Eq. Full Load Hours	Max. Hours	Emission Factor	Emission Factor Units	Emission Factor Source	Control Efficiency	Actual Emissions (lb/hr)	Actual Emissions (TPY)	Maximum Uncontrolled (lb/hr)	Maximum Uncontrolled (TPY)	Permit Limit (lb/hr)	Potential Emissions (lb/hr)	Potential Emissions (TPY)
MTST-03-BLR-STG-1	MS 3	ESP, FGDS, LNB, SCR	Electrostatic Precipitator, Flue Gas Desulfurization System, Low NOX Burner, Selected Catalytic Reduction	Unit 3 Boiler	PC Boiler Unit 3 Exhaust, PM10 (Fuel Oil)	41,600 (4)	9	88	2.0	lb/kgal	AP-42, Table 1.3-1, 5th edition	-	83	0.37	83	3.66	NA	83.20	4
MTST-03-BLR-STG-1	MS 3	ESP, FGDS, LNB, SCR	Electrostatic Precipitator, Flue Gas Desulfurization System, Low NOX Burner, Selected Catalytic Reduction	Unit 3 Boiler	PC Boiler Unit 3 Exhaust, SO2 (Fuel Oil)	41,600 (4)	9	88	-	-	Included in Coal CEMS data	-	-	-	-	-	-	-	-
MTST-03-BLR-STG-1	MS 3	ESP, FGDS, LNB, SCR	Electrostatic Precipitator, Flue Gas Desulfurization System, Low NOX Burner, Selected Catalytic Reduction	Unit 3 Boiler	PC Boiler Unit 3 Exhaust, VOC (Fuel Oil)	41,600 (4)	9	88	0.2	lb/kgal	FIRE	-	7	0.03	8	0.37	NA	8.32	0.4
MTST-03-BLR-STG-1	MS 3	ESP, FGDS, LNB, SCR	Electrostatic Precipitator, Flue Gas Desulfurization System, Low NOX Burner, Selected Catalytic Reduction	Unit 3 Boiler	PC Boiler Unit 3 Exhaust, Chromium (Fuel Oil)	41,600 (4)	9	88	3.0	lb/kgal	AP-42, Table 1.3-10, 5th Ed 9/98	-	101	0.45	125	5.49	NA	124.80	5
MTST-03-BLR-STG-1	MS 3	ESP, FGDS, LNB, SCR	Electrostatic Precipitator, Flue Gas Desulfurization System, Low NOX Burner, Selected Catalytic Reduction	Unit 3 Boiler	PC Boiler Unit 3 Exhaust, Manganese (Fuel Oil)	41,600 (4)	9	88	6.0	lb/TBtu	AP-42, Table 1.3-10, 5th Ed 9/98	-	0.028	0.00013	0.035	0.0015	NA	0.035	0.0015
MTST-03-BLR-STG-1	MS 3	ESP, FGDS, LNB, SCR	Electrostatic Precipitator, Flue Gas Desulfurization System, Low NOX Burner, Selected Catalytic Reduction	Unit 3 Boiler	PC Boiler Unit 3 Exhaust, Nickel (Fuel Oil)	41,600 (4)	9	88	3.0	lb/TBtu	AP-42, Table 1.3-10, 5th Ed 9/98	-	0.014	0.00006	0.017	0.0008	NA	0.017	0.0008
MTST-03-BLR-STG-1	MS 3	ESP, FGDS, LNB, SCR	Electrostatic Precipitator, Flue Gas Desulfurization System, Low NOX Burner, Selected Catalytic Reduction	Unit 3 Boiler	PC Boiler Unit 3 Exhaust, Sulfuric Acid Mist (Fuel Oil)	41,600 (4)	9	88	4.42E-01	lb/kgal	Southern Company Method 2005 Revision	88%	15	6.59E-02	18	8.09E-01	NA	1.84E+01	8.09E-01
MTST-03-BLR-STG-1	MS 3	ESP, FGDS, LNB, SCR	Electrostatic Precipitator, Flue Gas Desulfurization System, Low NOX Burner, Selected Catalytic Reduction	Unit 3 Boiler	PC Boiler Unit 3 Exhaust, Mercury (Fuel Oil)	41,600 (4)	9	88	3.0	lb/TBtu	AP-42, Table 1.3-10, 5th Ed 9/98	-	0.014	0.00006	0.017	0.0008	NA	0.017	0.0008
MTST-03-BLR-STG-1	MS 3	ESP, FGDS, LNB, SCR	Electrostatic Precipitator, Flue Gas Desulfurization System, Low NOX Burner, Selected Catalytic Reduction	Unit 3 Boiler	PC Boiler Unit 3 Exhaust, Selenium (Fuel Oil)	41,600 (4)	9	88	15.0	lb/TBtu	AP-42, Table 1.3-10, 5th Ed 9/98	-	0.071	0.00031	0.087	0.0038	NA	0.087	0.0038
MTST-03-BLR-STG-1	MS 3	ESP, FGDS, LNB, SCR	Electrostatic Precipitator, Flue Gas Desulfurization System, Low NOX Burner, Selected Catalytic Reduction	Unit 3 Boiler	PC Boiler Unit 3 Exhaust, Cadmium (Fuel Oil)	41,600 (4)	9	88	3.0	lb/TBtu	AP-42, Table 1.3-10, 5th Ed 9/98	-	0.014	0.00006	0.017	0.0008	NA	0.017	0.0008

Mount Storm Power Station
Emission Calculations for: MS3(Unit3)

Emission Unit ID	Emission Point ID	Pollution Contro Devicel ID	Pollution Control Device Description	Source ID #	Source Description	Full Load Thruput (tph)	Typical Eq. Full Load Hours	Max. Hours	Emission Factor	Emission Factor Units	Emission Factor Source	Control Efficiency	Actual Emissions (lb/hr)	Actual Emissions (TPY)	Maximum Uncontrolled (lb/hr)	Maximum Uncontrolled (TPY)	Permit Limit (lb/hr)	Potential Emissions (lb/hr)	Potential Emissions (TPY)
MTST-03-BLR-STG-1	MS 3	ESP, FGDS, LNB, SCR	Electrostatic Precipitator, Flue Gas Desulfurization System, Low NOX Burner, Selected Catalytic Reduction	Unit 3 Boiler	PC Boiler Unit 3 Exhaust, Arsenic (Fuel Oil)	41,600 (4)	9	88	4.0	lb/TBtu	AP-42, Table 1.3-10, 5th Ed 9/98	-	0.019	0.00008	0.023	0.0010	NA	0.023	0.0010
MTST-03-BLR-STG-1	MS 3	ESP, FGDS, LNB, SCR	Electrostatic Precipitator, Flue Gas Desulfurization System, Low NOX Burner, Selected Catalytic Reduction	Unit 3 Boiler	PC Boiler Unit 3 Exhaust, Beryllium (Fuel Oil)	41,600 (4)	9	88	3.0	lb/TBtu	AP-42, Table 1.3-10, 5th Ed 9/98	-	0.014	0.00006	0.017	0.0008	NA	0.017	0.0008

Notes:

(1) Emission factor includes control.
(2) CEMS emission factors are based on 2008 data and include both emissions from coal and fuel oil.
(3) Concentration of Mercury in Coal from 1999 ICR Project (ppm).
(4) In units of gallons per hour.
Input data used in the emission calculations is provided below:

Description (Unit 3)	Value	Units	Comment
Unit Capacity	5,824	MMBtu/hr	Designed Capacity
Heating Value of Coal	12,250	Btu/lb	Average from 2008 data
Heating Value of Fuel Oil	140,000	Btu/gal	Lower Heating Value
Full load throughput of Coal	238	tons / hr	Calculated as a function of unit capacity and fuel heating value.
Full load throughput of Fuel Oil	41,600	gal/hr	Calculated as a function of unit capacity and fuel heating value.
Annual Coal Consumed	1,184,147	TPY	Throughput is for both Units and is based on 2008 data
Annual Fuel Oil Consumed	298,189	gal/yr	Throughput is for both Units and is based on 2008 data
Annual NOx Emissions	1,339	TPY	Throughput is for both Units and is based on 2008 data
Annual SO2 Emissions	933	TPY	Throughput is for both Units and is based on 2008 data
NOx Emission Factor $_{Coal}$	0.092	lb/MMBtu	Calculated based on 2008 CAMS data.
SO2 Emission Factor $_{Coal}$	0.064	lb/MMBtu	Calculated based on 2008 CAMS data.
Lead Concentration $_{Coal}$	8.100	ppm	Calculated based on 3.4 * (C/A * PM)^0.80, where: C = Metal Concentration of BP, and A equals Ash weight factor. AP-42, Table 1.1-16, 5th Ed 9/98
Chromium Emission Factor $_{Coal}$	15.000	ppm	Calculated based on 3.7 * (C/A * PM)^0.58, where: C = Metal Concentration of BP, and A equals Ash weight factor. AP-42, Table 1.1-16, 5th Ed 9/98
Manganese Emission Factor $_{Coal}$	21.000	ppm	Calculated based on 3.8 * (C/A * PM)^0.60, where: C = Metal Concentration of BP, and A equals Ash weight factor. AP-42, Table 1.1-16, 5th Ed 9/98
Nickel Emission Factor $_{Coal}$	15.000	ppm	Calculated based on 4.4 * (C/A * PM)^0.48, where: C = Metal Concentration of BP, and A equals Ash weight factor. AP-42, Table 1.1-16, 5th Ed 9/98
Cadmium Emission Factor $_{Coal}$	0.370	ppm	Calculated based on 3.3 * (C/A * PM)^0.5, where: C = Metal Concentration of BP, and A equals Ash weight factor. AP-42, Table 1.1-16, 5th Ed 9/98
Arsenic Emission Factor $_{Coal}$	8.800	ppm	Calculated based on 3.1 * (C/A * PM)^0.85, where: C = Metal Concentration of BP, and A equals Ash weight factor. AP-42, Table 1.1-16, 5th Ed 9/98
Berylium Emission Factor $_{Coal}$	1.200	ppm	Calculated based on 1.2 * (C/A * PM)^1.1, where: C = Metal Concentration of BP, and A equals Ash weight factor. AP-42, Table 1.1-16, 5th Ed 9/98
% Hg Released from Coal	0.22	%	% released is from 2001 EPA Hg Guidance
Ash Weight Fraction	0.1259	%	Based on 2008 data.
Hours of Operation Total	6,125	hr/yr	Based on 2008 data.
Hours of Operation Coal	6,116	hr/yr	Total Hours minus Fuel Oil Hours
Hours of Operation Fuel Oil	9	hr/yr	Based on 2008 data.

Mount Storm Power Station
Emission Calculations for: MS4(AuxBoiler)

Emission Unit ID	Emission Point ID	Pollution Contro Devicel ID	Pollution Control Device Description	Source ID #	Source Description	Full Load Thruput (gph)	Typical Eq. Full Load Hours	Max. Hours (1)	Emission Factor	Emission Factor Units	Emission Factor Source	Control Efficiency	Actual Emissions (lb/hr)	Actual Emissions (TPY)	Maximum Uncontrolled (lb/hr)	Maximum Uncontrolled (TPY)	Permit Limit (lb/hr)	Potential Emissions (lb/hr)	Potential Emissions (TPY)
MTST-01-AB-STG-1	MS 4	None	None	Auxilary Boiler	Auxiliary Boiler Exhaust, CO (Fuel Oil)	1,071	0.73	1440	5.0	lb/kgal	AP-42, Table 1.3-1, 5th edition	-	5.36E+00	1.95E-03	5.36E+00	3.86E+00	NA	5.36E+00	3.86E+00
MTST-01-AB-STG-1	MS 4	None	None	Auxilary Boiler	Auxiliary Boiler Exhaust, NOX (Fuel Oil)	1,071	0.73	1440	24.0	lb/kgal	AP-42, Table 1.3-1, 5th edition	-	2.57E+01	9.35E-03	2.57E+01	1.85E+01	NA	2.57E+01	1.85E+01
MTST-01-AB-STG-1	MS 4	None	None	Auxilary Boiler	Auxiliary Boiler Exhaust, Lead (Fuel Oil)	1,071	0.73	1440	9.0	lb/Tbtu	AP-42, Table 1.3-10, 5th Ed 9/98	-	1.35E-03	4.91E-07	1.35E-03	9.72E-04	NA	1.35E-03	9.72E-04
MTST-01-AB-STG-1	MS 4	None	None	Auxilary Boiler	Auxiliary Boiler Exhaust, PM (Fuel Oil)	1,071	0.73	1440	2.0	lb/kgal	AP-42, Table 1.3-1, 5th edition	-	2.14E+00	7.79E-04	2.14E+00	1.54E+00	1.35E+01	1.35E+01	9.72E+00
MTST-01-AB-STG-1	MS 4	None	None	Auxilary Boiler	Auxiliary Boiler Exhaust, PM10 (Fuel Oil)	1,071	0.73	1440	1.0	lb/kgal	FIRE	-	1.07E+00	3.90E-04	1.07E+00	7.71E-01	NA	1.07E+00	7.71E-01
MTST-01-AB-STG-1	MS 4	None	None	Auxilary Boiler	Auxiliary Boiler Exhaust, SO2 (Fuel Oil)	1,071	0.73	1440	28.400	lb/kgal	AP-42, Table 1.3-1, 5th edition	-	3.04E+01	1.11E-02	3.04E+01	2.19E+01	4.05E+02	4.05E+02	2.92E+02
MTST-01-AB-STG-1	MS 4	None	None	Auxilary Boiler	Auxiliary Boiler Exhaust, VOC (Fuel Oil)	1,071	0.73	1440	0.2	lb/kgal	AP-42, Table 1.3-1, 5th edition	-	2.14E-01	7.79E-05	2.14E-01	1.54E-01	NA	2.14E-01	1.54E-01
MTST-01-AB-STG-1	MS 4	None	None	Auxilary Boiler	Auxiliary Boiler Exhaust, Chromium (Fuel Oil)	1,071	0.73	1440	3.0	lb/Tbtu	AP-42, Table 1.3-10, 5th Ed 9/98	-	4.50E-04	1.64E-07	4.50E-04	3.24E-04	NA	4.50E-04	3.24E-04
MTST-01-AB-STG-1	MS 4	None	None	Auxilary Boiler	Auxiliary Boiler Exhaust, Manganese (Fuel Oil)	1,071	0.73	1440	6.0	lb/Tbtu	AP-42, Table 1.3-10, 5th Ed 9/98	-	9.00E-04	3.27E-07	9.00E-04	6.48E-04	NA	9.00E-04	6.48E-04
MTST-01-AB-STG-1	MS 4	None	None	Auxilary Boiler	Auxiliary Boiler Exhaust, Nickel (Fuel Oil)	1,071	0.73	1440	3.0	lb/Tbtu	AP-42, Table 1.3-10, 5th Ed 9/98	-	4.50E-04	1.64E-07	4.50E-04	3.24E-04	NA	4.50E-04	3.24E-04
MTST-01-AB-STG-1	MS 4	None	None	Auxilary Boiler	Auxiliary Boiler Exhaust, Mercury (Fuel Oil)	1,071	0.73	1440	3.0	lb/Tbtu	AP-42, Table 1.3-10, 5th Ed 9/98	-	4.50E-04	1.64E-07	4.50E-04	3.24E-04	NA	4.50E-04	3.24E-04
MTST-01-AB-STG-1	MS 4	None	None	Auxilary Boiler	Auxiliary Boiler Exhaust, Selenium (Fuel Oil)	1,071	0.73	1440	15.0	lb/Tbtu	AP-42, Table 1.3-10, 5th Ed 9/98	-	2.25E-03	8.18E-07	2.25E-03	1.62E-03	NA	2.25E-03	1.62E-03
MTST-01-AB-STG-1	MS 4	None	None	Auxilary Boiler	Auxiliary Boiler Exhaust, Cadmium (Fuel Oil)	1,071	0.73	1440	3.0	lb/Tbtu	AP-42, Table 1.3-10, 5th Ed 9/98	-	4.50E-04	1.64E-07	4.50E-04	3.24E-04	NA	4.50E-04	3.24E-04
MTST-01-AB-STG-1	MS 4	None	None	Auxilary Boiler	Auxiliary Boiler Exhaust, Arsenic (Fuel Oil)	1,071	0.73	1440	4.0	lb/Tbtu	AP-42, Table 1.3-10, 5th Ed 9/98	-	6.00E-04	2.18E-07	6.00E-04	4.32E-04	NA	6.00E-04	4.32E-04
MTST-01-AB-STG-1	MS 4	None	None	Auxilary Boiler	Auxiliary Boiler Exhaust, Beryllium (Fuel Oil)	1,071	0.73	1440	3.0	lb/Tbtu	AP-42, Table 1.3-10, 5th Ed 9/98	-	4.50E-04	1.64E-07	4.50E-04	3.24E-04	NA	4.50E-04	3.24E-04

Notes:

(1)

Input data used in the emission calculations is provided below:

Description (Aux Boiler)	Value	Units	Comment
Unit Capacity	150	MMBtu/hr	Designed Capacity
Heating Value of Fuel Oil	140,000	Btu/gal	Lower Heating Value
Full load throughput of Fuel Oil	1,071	gal/hr	Calculated as a function of unit capacity and fuel heating value.
Annual Fuel Oil Consumed	779	gal/yr	Throughput is for both Units and is based on 2008 data
Sulfur Content Weight %	0.2	%	Based on 2008 data.
Hours of Operation Total	0.73	hr/yr	Based on 2008 data.

Mount Storm Power Station
Emission Calculations for: MS5(CT)

Emission Unit ID	Emission Point ID	Pollution Contro Devicel ID	Pollution Control Device Description	Source ID #	Source Description	Full Load Thruput (gph)	Typical Eq. Full Load Hours	Max. Hours	Emission Factor	Emission Factor Units	Emission Factor Source	Control Efficiency	Actual Emissions (lb/hr)	Actual Emissions (TPY)	Maximum Uncontrolled (lb/hr)	Maximum Uncontrolled (TPY)	Permit Limit (lb/hr)	Potential Emissions (lb/hr)	Potential Emissions (TPY)
MTST-C1-CTG-T-1	MS 5	None	None	Combution Turbine	Combustion Turbine Exhaust, CO (Jet Fuel)	1,701	11.00	8760	0.0003	lb/MMBtu	AP-42, Table 3.1-1, 5th Ed 4/00	-	5.50E-02	3.02E-04	6.91E-02	3.02E-01	NA	6.91E-02	3.02E-01
MTST-C1-CTG-T-1	MS 5	None	None	Combution Turbine	Combustion Turbine Exhaust, NOX (Jet Fuel)	1,701	11.00	8760	0.9	lb/MMBtu	AP-42, Table 3.1-1, 5th Ed 4/00	-	1.61E+02	8.87E-01	2.03E+02	8.87E+02	NA	2.03E+02	8.87E+02
MTST-C1-CTG-T-1	MS 5	None	None	Combution Turbine	Combustion Turbine Exhaust, Lead (Jet Fuel)	1,701	11.00	8760	1.4E-05	lb/MMBtu	AP-42, Table 3.1-1, 5th Ed 4/00	-	2.57E-03	1.41E-05	3.22E-03	1.41E-02	NA	3.22E-03	1.41E-02
MTST-C1-CTG-T-1	MS 5	None	None	Combution Turbine	Combustion Turbine Exhaust, PM (Jet Fuel)	1,701	11.00	8760	0.012	lb/MMBtu	AP-42, Table 3.1-1, 5th Ed 4/00	-	2.20E+00	1.21E-02	2.76E+00	1.21E+01	NA	2.76E+00	1.21E+01
MTST-C1-CTG-T-1	MS 5	None	None	Combution Turbine	Combustion Turbine Exhaust, PM10 (Jet Fuel)	1,701	11.00	8760	0.012	lb/MMBtu	AP-42, Table 3.1-1, 5th Ed 4/00	-	2.20E+00	1.21E-02	2.76E+00	1.21E+01	NA	2.76E+00	1.21E+01
MTST-C1-CTG-T-1	MS 5	None	None	Combution Turbine	Combustion Turbine Exhaust, SO2 (Jet Fuel)	1,701	11.00	8760	0.3	lb/MMBtu	AP-42, Table 3.1-1, 5th Ed 4/00	-	5.55E+01	3.05E-01	6.98E+01	3.06E+02	NA	6.98E+01	3.06E+02
MTST-C1-CTG-T-1	MS 5	None	None	Combution Turbine	Combustion Turbine Exhaust, VOC (Jet Fuel)	1,701	11.00	8760	4.10E-04	lb/MMBtu	AP-42, Table 3.1-1, 5th Ed 4/00	-	7.52E-02	4.13E-04	9.44E-02	4.13E-01	NA	9.44E-02	4.13E-01
MTST-C1-CTG-T-1	MS 5	None	None	Combution Turbine	Combustion Turbine Exhaust, Chromium (Jet Fuel)	1,701	11.00	8760	1.10E-05	lb/MMBtu	AP-42, Table 3.1-5, 5th Ed 4/00	-	2.02E-03	1.11E-05	2.53E-03	1.11E-02	NA	2.53E-03	1.11E-02
MTST-C1-CTG-T-1	MS 5	None	None	Combution Turbine	Combustion Turbine Exhaust, Manganese (Jet Fuel)	1,701	11.00	8760	7.90E-04	lb/MMBtu	AP-42, Table 3.1-5, 5th Ed 4/00	-	1.45E-01	7.96E-04	1.82E-01	7.97E-01	NA	1.82E-01	7.97E-01
MTST-C1-CTG-T-1	MS 5	None	None	Combution Turbine	Combustion Turbine Exhaust, Nickel (Jet Fuel)	1,701	11.00	8760	4.60E-06	lb/MMBtu	AP-42, Table 3.1-5, 5th Ed 4/00	-	8.43E-04	4.64E-06	1.06E-03	4.64E-03	NA	1.06E-03	4.64E-03
MTST-C1-CTG-T-1	MS 5	None	None	Combution Turbine	Combustion Turbine Exhaust, Mercury (Jet Fuel)	1,701	11.00	8760	1.20E-06	lb/MMBtu	AP-42, Table 3.1-5, 5th Ed 4/00	-	2.20E-04	1.21E-06	2.76E-04	1.21E-03	NA	2.76E-04	1.21E-03
MTST-C1-CTG-T-1	MS 5	None	None	Combution Turbine	Combustion Turbine Exhaust, Selenium (Jet Fuel)	1,701	11.00	8760	2.50E-06	lb/MMBtu	AP-42, Table 3.1-5, 5th Ed 4/00	-	4.58E-04	2.52E-06	5.76E-04	2.52E-03	NA	5.76E-04	2.52E-03
MTST-C1-CTG-T-1	MS 5	None	None	Combution Turbine	Combustion Turbine Exhaust, Cadmium (Jet Fuel)	1,701	11.00	8760	4.80E-06	lb/MMBtu	AP-42, Table 3.1-5, 5th Ed 4/00	-	8.80E-04	4.84E-06	1.10E-03	4.84E-03	NA	1.10E-03	4.84E-03
MTST-C1-CTG-T-1	MS 5	None	None	Combution Turbine	Combustion Turbine Exhaust, Arsenic (Jet Fuel)	1,701	11.00	8760	1.10E-05	lb/MMBtu	AP-42, Table 3.1-5, 5th Ed 4/00	-	2.02E-03	1.11E-05	2.53E-03	1.11E-02	NA	2.53E-03	1.11E-02
MTST-C1-CTG-T-1	MS 5	None	None	Combution Turbine	Combustion Turbine Exhaust, Beryllium (Jet Fuel)	1,701	11.00	8760	3.10E-07	lb/MMBtu	AP-42, Table 3.1-5, 5th Ed 4/00	-	5.68E-05	3.13E-07	7.14E-05	3.13E-04	NA	7.14E-05	3.13E-04

Notes:

Input data used in the emission calculations is provided below:

Description (Combustion Turbine)	Value	Units	Comment
Unit Capacity	230	MMBtu/hr	Designed Capacity
Heating Value of Jet Fuel	135,309	Btu/gal	Lower Heating Value
Full load throughput of Jet Fuel	1,701	gal/hr	Calculated as a function of unit capacity and fuel heating value.
Annual Jet Fuel Consumed	14,901	gal/yr	Throughput is for both Units and is based on 2008 data
Sulfur Content Weight %	0.3	%	Based on 2008 data.
Hours of Operation Total	11.00	hr/yr	Based on 2008 data.

Mount Storm Power Station
Emission Calculations for: MS6(EDG1A)

Emission Unit ID	Emission Point ID	Pollution Contro Devicel ID	Pollution Control Device Description	Source ID #	Source Description	Full Load Thruput (gph)	Typical Eq. Full Load Hours	Max. Hours	Emission Factor	Emission Factor Units	Emission Factor Source	Control Efficiency	Actual Emissions (lb/hr)	Actual Emissions (TPY)	Maximum Uncontrolled (lb/hr)	Maximum Uncontrolled (TPY)	Permit Limit (lb/hr)	Potential Emissions (lb/hr)	Potential Emissions (TPY)
MTST-00-EG-DG-1A	MS 6	None	None	Emergency Diesel Generator 1A	Emergency Diesel Generator Exhaust, CO (Diesel Fuel)	31	3.84	500	0.85	lb/MMBtu	AP-42, Table 3.4-1, 5th Ed 10/96	-	3.72	0.01	3.72	0.93	NA	3.72E+00	9.31E-01
MTST-00-EG-DG-1A	MS 6	None	None	Emergency Diesel Generator 1A	Emergency Diesel Generator Exhaust, NOX (Diesel Fuel)	31	3.84	500	3.2	lb/MMBtu	AP-42, Table 3.4-1, 5th Ed 10/96	-	14.02	0.03	14.02	3.50	NA	1.40E+01	3.50E+00
MTST-00-EG-DG-1A	MS 6	None	None	Emergency Diesel Generator 1A	Emergency Diesel Generator Exhaust, PM (Diesel Fuel)	31	3.84	500	13.70	lb/Kgal	FIRE	-	0.43	0.001	0.43	0.11	NA	4.29E-01	1.07E-01
MTST-00-EG-DG-1A	MS 6	None	None	Emergency Diesel Generator 1A	Emergency Diesel Generator Exhaust, PM10 (Diesel Fuel)	31	3.84	500	6.80	lb/Kgal	FIRE	-	0.21	0.000	0.21	0.05	NA	2.13E-01	5.32E-02
MTST-00-EG-DG-1A	MS 6	None	None	Emergency Diesel Generator 1A	Emergency Diesel Generator Exhaust, SO2 (Diesel Fuel)	31	3.84	500	0.202	lb/MMBtu	AP-42, Table 3.4-1, 5th Ed 10/96	-	0.88	0.002	0.88	0.22	NA	8.85E-01	2.21E-01
MTST-00-EG-DG-1A	MS 6	None	None	Emergency Diesel Generator 1A	Emergency Diesel Generator Exhaust, VOC (Diesel Fuel)	31	3.84	500	11.50	lb/Kgal	FIRE	-	0.36	0.001	0.36	0.09	NA	3.60E-01	8.99E-02

Notes:

Input data used in the emission calculations is provided below:

Description (EDG 1A)	Value	Units	Comment
Unit Capacity	4.38	MMBtu/hr	Designed Capacity
Heating Value of Fuel Oil	140,000	Btu/gal	Lower Heating Value
Full load throughput of Fuel Oil	31	gal/hr	Calculated as a function of unit capacity and fuel heating value.
Annual Fuel Oil Consumed	120	gal/yr	Throughput is for both Units and is based on 2008 data
Sulfur Content Weight %	0.3	%	Based on 2008 data.
Hours of Operation Total	3.84	hr/yr	Based on 2008 data.

Mount Storm Power Station
Emission Calculations for: MS6(EDG1B)

Emission Unit ID	Emission Point ID	Pollution Contro Devicel ID	Pollution Control Device Description	Source ID #	Source Description	Full Load Thruput (gph)	Typical Eq. Full Load Hours	Max. Hours	Emission Factor	Emission Factor Units	Emission Factor Source	Control Efficiency	Actual Emissions (lb/hr)	Actual Emissions (TPY)	Maximum Uncontrolled (lb/hr)	Maximum Uncontrolled (TPY)	Permit Limit (lb/hr)	Potential Emissions (lb/hr)	Potential Emissions (TPY)
MTST-00-EG-DG-1B	MS 6	None	None	Emergency Diesel Generator 1B	Emergency Diesel Generator Exhaust, CO (Diesel Fuel)	31	3.84	500	0.85	lb/MMBtu	AP-42, Table 3.4-1, 5th Ed 10/96	-	3.72	0.01	3.72	0.93	NA	3.72E+00	9.31E-01
MTST-00-EG-DG-1B	MS 6	None	None	Emergency Diesel Generator 1B	Emergency Diesel Generator Exhaust, NOX (Diesel Fuel)	31	3.84	500	3.2	lb/MMBtu	AP-42, Table 3.4-1, 5th Ed 10/96	-	14.02	0.03	14.02	3.50	NA	1.40E+01	3.50E+00
MTST-00-EG-DG-1B	MS 6	None	None	Emergency Diesel Generator 1B	Emergency Diesel Generator Exhaust, PM (Diesel Fuel)	31	3.84	500	13.70	lb/Kgal	FIRE	-	0.43	0.001	0.43	0.11	NA	4.29E-01	1.07E-01
MTST-00-EG-DG-1B	MS 6	None	None	Emergency Diesel Generator 1B	Emergency Diesel Generator Exhaust, PM10 (Diesel Fuel)	31	3.84	500	6.80	lb/Kgal	FIRE	-	0.21	0.000	0.21	0.05	NA	2.13E-01	5.32E-02
MTST-00-EG-DG-1B	MS 6	None	None	Emergency Diesel Generator 1B	Emergency Diesel Generator Exhaust, SO2 (Diesel Fuel)	31	3.84	500	0.202	lb/MMBtu	AP-42, Table 3.4-1, 5th Ed 10/96	-	0.88	0.002	0.88	0.22	NA	8.85E-01	2.21E-01
MTST-00-EG-DG-1B	MS 6	None	None	Emergency Diesel Generator 1B	Emergency Diesel Generator Exhaust, VOC (Diesel Fuel)	31	3.84	500	11.50	lb/Kgal	FIRE	-	0.36	0.001	0.36	0.09	NA	3.60E-01	8.99E-02

Notes:

Input data used in the emission calculations is provided below:

Description (EDG 1B)	Value	Units	Comment
Unit Capacity	4.38	MMBtu/hr	Designed Capacity
Heating Value of Fuel Oil	140,000	Btu/gal	Lower Heating Value
Full load throughput of Fuel Oil	31	gal/hr	Calculated as a function of unit capacity and fuel heating value.
Annual Fuel Oil Consumed	120	gal/yr	Throughput is for both Units and is based on 2008 data
Sulfur Content Weight %	0.3	%	Based on 2008 data.
Hours of Operation Total	3.84	hr/yr	Based on 2008 data.

Mount Storm Power Station
Emission Calculations for: MS7(CoalHandling)

Emission Unit ID	Emission Point ID	Pollution Contro Devicel ID	Pollution Control Device Description	Source ID #	Source Description	Full Load Throughput (tph)	Typical Eq. Full Load Hours	Max. Hours	Emission Factor	Emission Factor Units	Emission Factor Source	Control Efficiency	Actual Emissions (lb/hr)	Actual Emissions (TPY)	Maximum Uncontrolled (lb/hr)	Maximum Uncontrolled (TPY)	Permit Limit (lb/hr)	Potential Emissions (lb/hr)	Potential Emissions (TPY)
MTST-00-CS-CYS-1	MS 7	N/A	Full Enclosure	N/A	Coal Silo #1 (Transfer Point DP7 to feeders), PM	600	4,461.5	8760	1.03E-03	lb/ton	AP-42, Section 13.2.4, Equation 1	99%	6.16E-03	0.01	6.16E-01	0.77	6.16E-03	6.16E-03	1.54E-02
MTST-00-CS-CYS-1	MS 7	N/A	Full Enclosure	N/A	Coal Silo #1 (Transfer Point DP7 to feeders), PM10	600	4,461.5	8760	4.86E-04	lb/ton	AP-42, Section 13.2.4, Equation 1	99%	2.91E-03	0.01	2.91E-01	0.36	2.91E-03	2.91E-03	7.29E-03
MTST-00-CS-CYS-2	MS 7	N/A	Full Enclosure	N/A	Coal Silo #2 (Transfer Point DP7 to feeders), PM	600	4,461.5	8760	1.03E-03	lb/ton	AP-42, Section 13.2.4, Equation 1	99%	6.16E-03	0.01	6.16E-01	0.77	6.16E-03	6.16E-03	1.54E-02
MTST-00-CS-CYS-2	MS 7	N/A	Full Enclosure	N/A	Coal Silo #2 (Transfer Point DP7 to feeders), PM10	600	4,461.5	8760	4.86E-04	lb/ton	AP-42, Section 13.2.4, Equation 1	99%	2.91E-03	0.01	2.91E-01	0.36	2.91E-03	2.91E-03	7.29E-03
MTST-00-CS-FDR-VB1	MS 7	N/A	Full Enclosure	N/A	Feeder From Silo #1 to Conveyor MTST-00-CS-CNV-P1 (Transfer Point DP8), PM	400	6,692.3	8760	1.03E-03	lb/ton	AP-42, Section 13.2.4, Equation 1	99%	4.11E-03	0.01	4.11E-01	0.11	4.11E-03	4.11E-03	1.54E-02
MTST-00-CS-FDR-VB1	MS 7	N/A	Full Enclosure	N/A	Feeder From Silo #1 to Conveyor MTST-00-CS-CNV-P1 (Transfer Point DP8). PM10	400	6,692.3	8760	4.86E-04	lb/ton	AP-42, Section 13.2.4, Equation 1	99%	1.94E-03	0.01	1.94E-01	0.05	1.94E-03	1.94E-03	7.29E-03
MTST-00-CS-FDR-N1	MS 7	N/A	Full Enclosure	N/A	Feeder From Silo #1 to Conveyor MTST-00-CS-CNV-P1 (Transfer Point DP8), PM	400	6,692.3	8760	1.03E-03	lb/ton	AP-42, Section 13.2.4, Equation 1	99%	4.11E-03	0.01	4.11E-01	0.11	4.11E-03	4.11E-03	1.54E-02
MTST-00-CS-FDR-N1	MS 7	N/A	Full Enclosure	N/A	Feeder From Silo #1 to Conveyor MTST-00-CS-CNV-P1 (Transfer Point DP8), PM10	400	6,692.3	8760	4.86E-04	lb/ton	AP-42, Section 13.2.4, Equation 1	99%	1.94E-03	0.01	1.94E-01	0.05	1.94E-03	1.94E-03	7.29E-03
MTST-00-CS-FDR-N2	MS 7	N/A	Full Enclosure	N/A	Feeder From Silo #1 to Conveyor MTST-00-CS-CNV-P1 (Transfer Point DP8), PM	400	6,692.3	8760	1.03E-03	lb/ton	AP-42, Section 13.2.4, Equation 1	99%	4.11E-03	0.01	4.11E-01	0.11	4.11E-03	4.11E-03	1.54E-02
MTST-00-CS-FDR-N2	MS 7	N/A	Full Enclosure	N/A	Feeder From Silo #1 to Conveyor MTST-00-CS-CNV-P1 (Transfer Point DP8). PM10	400	6,692.3	8760	4.86E-04	lb/ton	AP-42, Section 13.2.4, Equation 1	99%	1.94E-03	0.01	1.94E-01	0.05	1.94E-03	1.94E-03	7.29E-03
MTST-00-CS-FDR-VB2	MS 7	N/A	Full Enclosure	N/A	Feeder From Silo #1 to Conveyor MTST-00-CS-CNV-P1 (Transfer Point DP8), PM	400	6,692.3	8760	1.03E-03	lb/ton	AP-42, Section 13.2.4, Equation 1	99%	4.11E-03	0.01	4.11E-01	0.11	4.11E-03	4.11E-03	1.54E-02
MTST-00-CS-FDR-VB2	MS 7	N/A	Full Enclosure	N/A	Feeder From Silo #1 to Conveyor MTST-00-CS-CNV-P1 (Transfer Point DP8), PM10	400	6,692.3	8760	4.86E-04	lb/ton	AP-42, Section 13.2.4, Equation 1	99%	1.94E-03	0.01	1.94E-01	0.05	1.94E-03	1.94E-03	7.29E-03
MTST-00-CS-FDR-N3	MS 7	N/A	Full Enclosure	N/A	Feeder From Silo #1 to Conveyor MTST-00-CS-CNV-P1 (Transfer Point DP8), PM	400	6,692.3	8760	1.03E-03	lb/ton	AP-42, Section 13.2.4, Equation 1	99%	4.11E-03	0.01	4.11E-01	0.11	4.11E-03	4.11E-03	1.54E-02
MTST-00-CS-FDR-N3	MS 7	N/A	Full Enclosure	N/A	Feeder From Silo #1 to Conveyor MTST-00-CS-CNV-P1 (Transfer Point DP8), PM10	400	6,692.3	8760	4.86E-04	lb/ton	AP-42, Section 13.2.4, Equation 1	99%	1.94E-03	0.01	1.94E-01	0.05	1.94E-03	1.94E-03	7.29E-03

Mount Storm Power Station
Emission Calculations for: MS7(CoalHandling)

Emission Unit ID	Emission Point ID	Pollution Contro Devicel ID	Pollution Control Device Description	Source ID #	Source Description	Full Load Throughput (tph)	Typical Eq. Full Load Hours	Max. Hours	Emission Factor	Emission Factor Units	Emission Factor Source	Control Efficiency	Actual Emissions (lb/hr)	Actual Emissions (TPY)	Maximum Uncontrolled (lb/hr)	Maximum Uncontrolled (TPY)	Permit Limit (lb/hr)	Potential Emissions (lb/hr)	Potential Emissions (TPY)
MTST-00-CS-FDR-N4	MS 7	N/A	Full Enclosure	N/A	Feeder From Silo #1 to Conveyor MTST-00-CS-CNV-P1 (Transfer Point DP8), PM10	400	6,692.3	8760	1.03E-03	lb/ton	AP-42, Section 13.2.4, Equation 1	99%	4.11E-03	0.01	4.11E-01	0.11	4.11E-03	4.11E-03	1.54E-02
MTST-00-CS-FDR-N4	MS 7	N/A	Full Enclosure	N/A	Feeder From Silo #1 to Conveyor MTST-00-CS-CNV-P1 (Transfer Point DP8), PM10	400	6,692.3	8760	4.86E-04	lb/ton	AP-42, Section 13.2.4, Equation 1	99%	1.94E-03	0.01	1.94E-01	0.05	1.94E-03	1.94E-03	7.29E-03
MTST-00-CS-FDR-VB3	MS 7	N/A	Full Enclosure	N/A	Feeder From Silo #1 to Conveyor MTST-00-CS-CNV-P1 (Transfer Point DP8), PM10	400	6,692.3	8760	1.03E-03	lb/ton	AP-42, Section 13.2.4, Equation 1	99%	4.11E-03	0.01	4.11E-01	0.11	4.11E-03	4.11E-03	1.54E-02
MTST-00-CS-FDR-VB3	MS 7	N/A	Full Enclosure	N/A	Feeder From Silo #1 to Conveyor MTST-00-CS-CNV-P1 (Transfer Point DP8), PM10	400	6,692.3	8760	4.86E-04	lb/ton	AP-42, Section 13.2.4, Equation 1	99%	1.94E-03	0.01	1.94E-01	0.05	1.94E-03	1.94E-03	7.29E-03
MTST-00-CS-FDR-VB4	MS 7	N/A	Full Enclosure	N/A	Feeder From Silo #2 to Conveyor MTST-00-CS-CNV-P1 (Transfer Point DP8), PM	400	6,692.3	8760	1.03E-03	lb/ton	AP-42, Section 13.2.4, Equation 1	99%	4.11E-03	0.01	4.11E-01	0.11	4.11E-03	4.11E-03	1.54E-02
MTST-00-CS-FDR-VB4	MS 7	N/A	Full Enclosure	N/A	Feeder From Silo #2 to Conveyor MTST-00-CS-CNV-P1 (Transfer Point DP8), PM	400	6,692.3	8760	4.86E-04	lb/ton	AP-42, Section 13.2.4, Equation 1	99%	1.94E-03	0.01	1.94E-01	0.05	1.94E-03	1.94E-03	7.29E-03
MTST-00-CS-FDR-N5	MS 7	N/A	Full Enclosure	N/A	Feeder From Silo #2 to Conveyor MTST-00-CS-CNV-P1 (Transfer Point DP8), PM	400	6,692.3	8760	1.03E-03	lb/ton	AP-42, Section 13.2.4, Equation 1	99%	4.11E-03	0.01	4.11E-01	0.11	4.11E-03	4.11E-03	1.54E-02
MTST-00-CS-FDR-N5	MS 7	N/A	Full Enclosure	N/A	Feeder From Silo #2 to Conveyor MTST-00-CS-CNV-P1 (Transfer Point DP8), PM	400	6,692.3	8760	4.86E-04	lb/ton	AP-42, Section 13.2.4, Equation 1	99%	1.94E-03	0.01	1.94E-01	0.05	1.94E-03	1.94E-03	7.29E-03
MTST-00-CS-FDR-N6	MS 7	N/A	Full Enclosure	N/A	Feeder From Silo #2 to Conveyor MTST-00-CS-CNV-P1 (Transfer Point DP8), PM	400	6,692.3	8760	1.03E-03	lb/ton	AP-42, Section 13.2.4, Equation 1	99%	4.11E-03	0.01	4.11E-01	0.11	4.11E-03	4.11E-03	1.54E-02
MTST-00-CS-FDR-N6	MS 7	N/A	Full Enclosure	N/A	Feeder From Silo #2 to Conveyor MTST-00-CS-CNV-P1 (Transfer Point DP8), PM	400	6,692.3	8760	4.86E-04	lb/ton	AP-42, Section 13.2.4, Equation 1	99%	1.94E-03	0.01	1.94E-01	0.05	1.94E-03	1.94E-03	7.29E-03
MTST-00-CS-FDR-VB5	MS 7	N/A	Full Enclosure	N/A	Feeder From Silo #2 to Conveyor MTST-00-CS-CNV-P1 (Transfer Point DP8), PM	400	6,692.3	8760	1.03E-03	lb/ton	AP-42, Section 13.2.4, Equation 1	99%	4.11E-03	0.01	4.11E-01	0.11	4.11E-03	4.11E-03	1.54E-02
MTST-00-CS-FDR-VB5	MS 7	N/A	Full Enclosure	N/A	Feeder From Silo #2 to Conveyor MTST-00-CS-CNV-P1 (Transfer Point DP8), PM	400	6,692.3	8760	4.86E-04	lb/ton	AP-42, Section 13.2.4, Equation 1	99%	1.94E-03	0.01	1.94E-01	0.05	1.94E-03	1.94E-03	7.29E-03
MTST-00-CS-FDR-N7	MS 7	N/A	Full Enclosure	N/A	Feeder From Silo #2 to Conveyor MTST-00-CS-CNV-P1 (Transfer Point DP8), PM	400	6,692.3	8760	1.03E-03	lb/ton	AP-42, Section 13.2.4, Equation 1	99%	4.11E-03	0.01	4.11E-01	0.11	4.11E-03	4.11E-03	1.54E-02
MTST-00-CS-FDR-N7	MS 7	N/A	Full Enclosure	N/A	Feeder From Silo #2 to Conveyor MTST-00-CS-CNV-P1 (Transfer Point DP8), PM	400	6,692.3	8760	4.86E-04	lb/ton	AP-42, Section 13.2.4, Equation 1	99%	1.94E-03	0.01	1.94E-01	0.05	1.94E-03	1.94E-03	7.29E-03

Mount Storm Power Station
Emission Calculations for: MS7(CoalHandling)

Emission Unit ID	Emission Point ID	Pollution Contro Devicel ID	Pollution Control Device Description	Source ID #	Source Description	Full Load Throughput (tph)	Typical Eq. Full Load Hours	Max. Hours	Emission Factor	Emission Factor Units	Emission Factor Source	Control Efficiency	Actual Emissions (lb/hr)	Actual Emissions (TPY)	Maximum Uncontrolled (lb/hr)	Maximum Uncontrolled (TPY)	Permit Limit (lb/hr)	Potential Emissions (lb/hr)	Potential Emissions (TPY)
MTST-00-CS-FDR-N8	MS 7	N/A	Full Enclosure	N/A	Feeder From Silo #2 to Conveyor MTST-00-CS-CNV-P1 (Transfer Point DP8), PM	400	6,692.3	8760	1.03E-03	lb/ton	AP-42, Section 13.2.4, Equation 1	99%	4.11E-03	0.01	4.11E-01	0.11	4.11E-03	4.11E-03	1.54E-02
MTST-00-CS-FDR-N8	MS 7	N/A	Full Enclosure	N/A	Feeder From Silo #2 to Conveyor MTST-00-CS-CNV-P1 (Transfer Point DP8), PM	400	6,692.3	8760	4.86E-04	lb/ton	AP-42, Section 13.2.4, Equation 1	99%	1.94E-03	0.01	1.94E-01	0.05	1.94E-03	1.94E-03	7.29E-03
MTST-00-CS-FDR-VB6	MS 7	N/A	Full Enclosure	N/A	Feeder From Silo #2 to Conveyor MTST-00-CS-CNV-P1 (Transfer Point DP8), PM	400	6,692.3	8760	1.03E-03	lb/ton	AP-42, Section 13.2.4, Equation 1	99%	4.11E-03	0.01	4.11E-01	0.11	4.11E-03	4.11E-03	1.54E-02
MTST-00-CS-FDR-VB6	MS 7	N/A	Full Enclosure	N/A	Feeder From Silo #2 to Conveyor MTST-00-CS-CNV-P1 (Transfer Point DP8), PM	400	6,692.3	8760	4.86E-04	lb/ton	AP-42, Section 13.2.4, Equation 1	99%	1.94E-03	0.01	1.94E-01	0.05	1.94E-03	1.94E-03	7.29E-03
MTST-00-CS-CNV-S2	MS 7	N/A	Full Enclosure	N/A	Coal Conveyor MTST-00-CS-CNV-S2 To Silo's MTST-00-CS-CYS-1 and 2 (Transfer Point DP6), PM	1200	2,230.8	8760	1.03E-03	lb/ton	AP-42, Section 13.2.4, Equation 1	99%	1.23E-02	0.01	1.23E+00	1.54	1.23E-02	1.23E-02	1.54E-02
MTST-00-CS-CNV-S2	MS 7	N/A	Full Enclosure	N/A	Coal Conveyor MTST-00-CS-CNV-S2 To Silo's MTST-00-CS-CYS-1 and 2 (Transfer Point DP6), PM10	1200	2,230.8	8760	4.86E-04	lb/ton	AP-42, Section 13.2.4, Equation 1	99%	5.83E-03	0.01	5.83E-01	0.73	5.83E-03	5.83E-03	7.29E-03

PM Emissions	0.08	0.23	8.22	4.62	-	0.08	0.26
PM10 Emissions	0.04	0.11	3.89	2.19	-	0.04	0.12

NOTES:

(1) Emission unit is not currently in use.

Input data used in the emission calculations is provided below:

Description	Value	Units	Comment
Percent H2O Coal	5.62	%	Value from 2008 Annual Emissions Spreadsheet
Mean Wind Speed	8.0	mph	Value from 2008 Annual Emissions Spreadsheet
Actual Coal Throughput Rate	2,676,907	TPY	Value from 2008 Annual Emissions Spreadsheet
Permitted Coal Throughput Rate	3,000,000	TPY	Title V permit condition 5.1.

Mount Storm Power Station
Emission Calculations for: MS8(CoalHandling)

Emission Unit ID	Emission Point ID	Pollution Contro Devicel ID	Pollution Control Device Description	Source ID #	Source Description	Full Load Throughput (tph)	Typical Eq. Full Load Hours	Max. Hours	Emission Factor	Emission Factor Units	Emission Factor Source	Control Efficiency	Actual Emissions (lb/hr)	Actual Emissions (TPY)	Maximum Uncontrolled (lb/hr)	Maximum Uncontrolled (TPY)	Permit Limit (TPY)	Potential Emissions (lb/hr)	Potential Emissions (TPY)
MTST-00-CS-CNV-P1	MS 8	N/A	Full Enclosure	N/A	Coal Conveyor from Silo Feeders to Transfer House MTST-00-BLD-CYTH-1, PM	1600	661	8760	1.03E-03	lb/ton	AP-42, Section 13.2.4,	0.99	1.23E-02	0.004	1.64	7.20	1.23E-02	0.012	0.015
MTST-00-CS-CNV-P1	MS 8	N/A	Full Enclosure	N/A	Coal Conveyor from Silo Feeders to Transfer House MTST-00-BLD-CYTH-1, PM10	1600	661	8760	4.86E-04	lb/ton	AP-42, Section 13.2.4,	0.99	5.83E-03	0.002	0.78	3.40	5.83E-03	0.01	0.01

PM Emissions	0.01	0.00	1.64	7.20	-	0.01	0.02
PM10 Emissions	0.01	0.00	0.78	3.40	-	0.01	0.01

NOTES:
Input data used in the emission calculations is provided below:

Description	Value	Units	Comment
Percent H2O Coal	5.62	%	Value from 2008 Annual Emissions Spreadsheet
Mean Wind Speed	8.0	mph	Value from 2008 Annual Emissions Spreadsheet
Actual Coal Throughput Rate	792,880	TPY	Value from 2008 Annual Emissions Spreadsheet
Permitted Coal Throughput Rate	3,000,000	TPY	Title V permit condition 5.1.
Permitted Coal Throughput Rate	1,200	TPH	Title V permit condition 5.1.

Mount Storm Power Station
Emission Calculations for: MS9(CoalHandling)

Emission Unit ID	Emission Point ID	Pollution Contro Devicel ID	Pollution Control Device Description	Source ID #	Source Description	Full Load Throughput (tph)	Typical Eq. Full Load Hours	Max. Hours	Emission Factor	Emission Factor Units	Emission Factor Source	Control Efficiency	Actual Emissions (lb/hr)	Actual Emissions (TPY)	Maximum Uncontrolled (lb/hr)	Maximum Uncontrolled (TPY)	Permit Limit (TPY)	Potential Emissions (lb/hr)	Potential Emissions (TPY)
MTST-00-CS-CNV-Q	MS 9	N/A	Full Enclosure & Wet Spray	N/A	Coal Conveyor from Transfer House to Primary Crushers MTST-00-CS-CRH-4 or MTST-00-CS-CRH-5 or By Pass Chutes MTST-00-CS-CHT-C2BP and H2BP, PM	1200	2,231	8760	1.03E-03	lb/ton	AP-42, Section 13.2.4, Equation 1	0.99	1.23E-02	0.014	1.23	5.40	N/A	0.012	0.054
MTST-00-CS-CNV-Q	MS 9	N/A	Full Enclosure & Wet Spray	N/A	Coal Conveyor from Transfer House to Primary Crushers MTST-00-CS-CRH-4 or MTST-00-CS-CRH-5 or By Pass Chutes MTST-00-CS-CHT-C2BP and H2BP, PM10	1200	2,231	8760	4.86E-04	lb/ton	AP-42, Section 13.2.4, Equation 1	0.99	5.83E-03	0.007	0.58	2.55	N/A	0.006	0.026

PM Emissions	0.01	0.01	1.23	5.40	-	0.01	0.05
PM10 Emissions	0.01	0.01	0.58	2.55	-	0.01	0.03

NOTES:
Input data used in the emission calculations is provided below:

Description	Value	Units	Comment
Percent H2O Coal	5.62	%	Value from 2008 Annual Emissions Spreadsheet
Mean Wind Speed	8.0	mph	Value from 2008 Annual Emissions Spreadsheet
Actual Coal Throughput Rate	2,676,907	TPY	Value from 2008 Annual Emissions Spreadsheet

Mount Storm Power Station
Emission Calculations for: MS10(CoalHandling)

Emission Unit ID	Emission Point ID	Pollution Contro Devicel ID	Pollution Control Device Description	Source ID #	Source Description	Full Load Throughput (tph)	Typical Eq. Full Load Hours	Max. Hours	Emission Factor	Emission Factor Units	Emission Factor Source	Control Efficiency	Actual Emissions (lb/hr)	Actual Emissions (TPY)	Maximum Uncontrolled (lb/hr)	Maximum Uncontrolled (TPY)	Permit Limit (TPY)	Potential Emissions (lb/hr)	Potential Emissions (TPY)
MTST-00-CS-CRH-4	MS 10	N/A	Full Enclosure	N/A	Primary Crusher #4 to Conveyor MTST-00-CS-CNV-C2, PM	1200	1,773	8760	6.00E-02	lb/ton	AP-42, Section 11.24, Table 11.24-2	0.99	0.720	0.638	72.00	315.36	N/A	0.720	3.154
MTST-00-CS-CRH-4	MS 10	N/A	Full Enclosure	N/A	Primary Crusher #4 to Conveyor MTST-00-CS-CNV-C2, PM10	1200	1,773	8760	2.00E-02	lb/ton	AP-42, Section 11.24, Table 11.24-2	0.99	0.240	0.213	24.00	105.12	N/A	0.240	1.051
MTST-00-CS-CRH-5	MS 10	N/A	Full Enclosure	N/A	Primary Crusher #5 to Conveyor MTST-00-CS-CNV-H2, PM	1200	1,773	8760	6.00E-02	lb/ton	AP-42, Section 11.24, Table 11.24-2	0.99	0.720	0.638	72.00	315.36	N/A	0.720	3.154
MTST-00-CS-CRH-5	MS 10	N/A	Full Enclosure	N/A	Primary Crusher #5 to Conveyor MTST-00-CS-CNV-H2. PM10	1200	1,773	8760	2.00E-02	lb/ton	AP-42, Section 11.24, Table 11.24-2	0.99	0.240	0.213	24.00	105.12	N/A	0.240	1.051
MTST-00-CS-CHT-C2BP	MS 10	N/A	Full Enclosure	N/A	#4 Crusher By Pass Chute to MTST-00-CS-CNV-C2, PM	800	2,659	8760	1.03E-03	lb/ton	AP-42, Section 13.2.4, Equation 1	0.99	8.22E-03	0.011	0.82	3.60	N/A	0.008	0.036
MTST-00-CS-CHT-C2BP	MS 10	N/A	Full Enclosure	N/A	#4 Crusher By Pass Chute to MTST-00-CS-CNV-C2, PM10	800	2,659	8760	4.86E-04	lb/ton	AP-42, Section 13.2.4, Equation 1	0.99	3.89E-03	0.005	0.39	1.70	N/A	0.004	0.017
MTST-00-CS-CHT-H2BP	MS 10	N/A	Full Enclosure	N/A	#5 Crusher By Pass Chute to MTST-00-CS-CNV-H2, PM	1200	1,773	8760	1.03E-03	lb/ton	AP-42, Section 13.2.4, Equation 1	0.99	1.23E-02	0.011	1.23	5.40	N/A	0.012	0.054
MTST-00-CS-CHT-H2BP	MS 10	N/A	Full Enclosure	N/A	#5 Crusher By Pass Chute to MTST-00-CS-CNV-H2, PM10	1200	1,773	8760	4.86E-04	lb/ton	AP-42, Section 13.2.4, Equation 1	0.99	5.83E-03	0.005	0.58	2.55	N/A	0.006	0.026
MTST-00-CS-CNV-C1	MS 10	N/A	Underground and Full Enclosure	N/A	Reclaim Conveyor to Primary Crusher # 4, PM	1200	1,773	8760	1.03E-03	lb/ton	AP-42, Section 13.2.4, Equation 1	0.99	1.23E-02	0.011	1.23	5.40	N/A	0.012	0.054

Mount Storm Power Station
Emission Calculations for: MS10(CoalHandling)

Emission Unit ID	Emission Point ID	Pollution Contro Devicel ID	Pollution Control Device Description	Source ID #	Source Description	Full Load Throughput (tph)	Typical Eq. Full Load Hours	Max. Hours	Emission Factor	Emission Factor Units	Emission Factor Source	Control Efficiency	Actual Emissions (lb/hr)	Actual Emissions (TPY)	Maximum Uncontrolled (lb/hr)	Maximum Uncontrolled (TPY)	Permit Limit (TPY)	Potential Emissions (lb/hr)	Potential Emissions (TPY)
MTST-00-CS-CNV-C1	MS 10	N/A	Underground and Full Enclosure	N/A	Reclaim Conveyor to Primary Crusher # 4, PM10	1200	1,773	8760	4.86E-04	lb/ton	AP-42, Section 13.2.4, Equation 1	0.99	5.83E-03	0.005	0.58	2.55	N/A	0.006	0.026
MTST-00-CS-CNV-H1	MS 10	N/A	Full Enclosure	N/A	Reclaim Conveyor to Primary Crusher # 5, PM	1200	1,773	8760	1.03E-03	lb/ton	AP-42, Section 13.2.4, Equation 1	0.99	1.23E-02	0.011	1.23	5.40	N/A	0.012	0.054
MTST-00-CS-CNV-H1	MS 10	N/A	Full Enclosure	N/A	Reclaim Conveyor to Primary Crusher # 5, PM10	1200	1,773	8760	4.86E-04	lb/ton	AP-42, Section 13.2.4, Equation 1	0.99	5.83E-03	0.005	0.58	2.55	N/A	0.006	0.026

PM Emissions	1.49	1.32	148.52	650.51	-	1.49	6.51
PM10 Emissions	0.50	0.45	50.14	219.60	-	0.50	2.20

NOTES:
Input data used in the emission calculations is provided below:

Description	Value	Units	Comment
Percent H2O Coal	5.62	%	Value from 2008 Annual Emissions Spreadsheet
Mean Wind Speed	8.0	mph	Value from 2008 Annual Emissions Spreadsheet
Crusher PM EF	0.06	lb/ton	AP-42, Section 11.24, Table 11.24-2
Crusher PM10 EF	0.02	lb/ton	AP-42, Section 11.24, Table 11.24-2
Actual Coal Throughput Rate	2,127,368	TPY	Value from 2008 Annual Emissions Spreadsheet

Mount Storm Power Station
Emission Calculations for: MS11(CoalHandling)

Emission Unit ID	Emission Point ID	Pollution Contro Devicel ID	Pollution Control Device Description	Source ID #	Source Description	Full Load Throughput (tph)	Typical Eq. Full Load Hours	Max. Hours	Emission Factor	Emission Factor Units	Emission Factor Source	Control Efficiency	Actual Emissions (lb/hr)	Actual Emissions (TPY)	Maximum Uncontrolled (lb/hr)	Maximum Uncontrolled (TPY)	Permit Limit (TPY)	Potential Emissions (lb/hr)	Potential Emissions (TPY)
MTST-00-CS-CNV-C2	MS 11	N/A	Full Enclosure	N/A	Coal Conveyor from Primary Crusher #4 to Conveyor MTST-00-CS-CNV-D, PM	1200	1,115	8760	1.03E-03	lb/ton	AP-42, Section 13.2.4, Equation 1	0.99	1.23E-02	0.007	1.23	5.40	N/A	0.012	0.054
MTST-00-CS-CNV-C2	MS 11	N/A	Full Enclosure	N/A	Coal Conveyor from Primary Crusher #4 to Conveyor MTST-00-CS-CNV-D, PM10	1200	1,115	8760	4.86E-04	lb/ton	AP-42, Section 13.2.4, Equation 1	0.99	5.83E-03	0.003	0.58	2.55	N/A	0.006	0.026
MTST-00-CS-CNV-H2	MS 11	N/A	Full Enclosure	N/A	Coal Conveyor from Primary Crusher #5 to Conveyor MTST-00-CS-CNV-J, PM	1200	1,115	8760	1.03E-03	lb/ton	AP-42, Section 13.2.4, Equation 1	0.99	1.23E-02	0.007	1.23	5.40	N/A	0.012	0.054
MTST-00-CS-CNV-H2	MS 11	N/A	Full Enclosure	N/A	Coal Conveyor from Primary Crusher #5 to Conveyor MTST-00-CS-CNV-J, PM10	1200	1,115	8760	4.86E-04	lb/ton	AP-42, Section 13.2.4, Equation 1	0.99	5.83E-03	0.003	0.58	2.55	N/A	0.006	0.026

PM Emissions	0.02	0.01	2.46	10.80	-	0.02	0.11
PM10 Emissions	0.01	0.01	1.17	5.11	-	0.01	0.05

NOTES:
Input data used in the emission calculations is provided below:

Description	Value	Units	Comment
Percent H2O Coal	5.62	%	Value from 2008 Annual Emissions Spreadsheet
Mean Wind Speed	8.0	mph	Value from 2008 Annual Emissions Spreadsheet
Actual Coal Throughput Rate	1,338,454	TPY	Value from 2008 Annual Emissions Spreadsheet

Mount Storm Power Station
Emission Calculations for: MS12(CoalHandling)

Emission Unit ID	Emission Point ID	Pollution Contro Devicel ID	Pollution Control Device Description	Source ID #	Source Description	Full Load Throughput (tph)	Typical Eq. Full Load Hours	Max. Hours	Emission Factor	Emission Factor Units	Emission Factor Source	Control Efficiency	Actual Emissions (lb/hr)	Actual Emissions (TPY)	Maximum Uncontrolled (lb/hr)	Maximum Uncontrolled (TPY)	Permit Limit (TPY)	Potential Emissions (lb/hr)	Potential Emissions (TPY)
MTST-00-CS-FDR-D	MS 12	N/A	Full Enclosure	N/A	Tripper Reject Feeder to Conveyor MTST-00-CS-CNV-D	1200	1,773	8760	1.03E-03	lb/ton	AP-42, Section 13.2.4, Equation 1	0.99	1.23E-02	0.011	1.23	5.40	N/A	0.012	0.054
MTST-00-CS-FDR-D	MS 12	N/A	Full Enclosure	N/A	Tripper Reject Feeder to Conveyor MTST-00-CS-CNV-D	1200	1,773	8760	4.86E-04	lb/ton	AP-42, Section 13.2.4, Equation 1	0.99	5.83E-03	0.005	0.58	2.55	N/A	0.006	0.026
MTST-00-CS-CNV-D	MS 12	N/A	Full Enclosure	N/A	Coal Conveyor to Units 1, 2, and 3 Bunkers	1200	1,773	8760	1.03E-03	lb/ton	AP-42, Section 13.2.4, Equation 1	0.99	1.23E-02	0.011	1.23	5.40	N/A	0.012	0.054
MTST-00-CS-CNV-D	MS 12	N/A	Full Enclosure	N/A	Coal Conveyor to Units 1, 2, and 3 Bunkers	1200	1,773	8760	4.86E-04	lb/ton	AP-42, Section 13.2.4, Equation 1	0.99	5.83E-03	0.005	0.58	2.55	N/A	0.006	0.026
MTST-00-CS-FDR-J	MS 12	N/A	Full Enclosure	N/A	Tripper Reject Feeder to Conveyor MTST-00-CS-CNV-J	1200	1,773	8760	1.03E-03	lb/ton	AP-42, Section 13.2.4, Equation 1	0.99	1.23E-02	0.011	1.23	5.40	N/A	0.012	0.054
MTST-00-CS-FDR-J	MS 12	N/A	Full Enclosure	N/A	Tripper Reject Feeder to Conveyor MTST-00-CS-CNV-J	1200	1,773	8760	4.86E-04	lb/ton	AP-42, Section 13.2.4, Equation 1	0.99	5.83E-03	0.005	0.58	2.55	N/A	0.006	0.026
MTST-00-CS-CNV-J	MS 12	N/A	Full Enclosure	N/A	Coal Conveyor to Units 1, 2, and 3 Bunkers	1200	1,773	8760	1.03E-03	lb/ton	AP-42, Section 13.2.4, Equation 1	0.99	1.23E-02	0.011	1.23	5.40	N/A	0.012	0.054
MTST-00-CS-CNV-J	MS 12	N/A	Full Enclosure	N/A	Coal Conveyor to Units 1, 2, and 3 Bunkers	1200	1,773	8760	4.86E-04	lb/ton	AP-42, Section 13.2.4, Equation 1	0.99	5.83E-03	0.005	0.58	2.55	N/A	0.006	0.026

PM Emissions	0.05	0.04	4.93	21.59	-	0.05	0.22
PM10 Emissions	0.02	0.02	2.33	10.21	-	0.02	0.10

NOTES:
Input data used in the emission calculations is provided below:

Description	Value	Units	Comment
Percent H2O Coal	5.62	%	Value from 2008 Annual Emissions Spreadsheet
Mean Wind Speed	8.0	mph	Value from 2008 Annual Emissions Spreadsheet
Actual Coal Throughput Rate	2,127,368	TPY	Value from 2008 Annual Emissions Spreadsheet

Mount Storm Power Station
Emission Calculations for: MS13(CoalHandling)

Emission Unit ID	Emission Point ID	Pollution Contro Devicel ID	Pollution Control Device Description	Source ID #	Source Description	Full Load Throughput (tph)	Typical Eq. Full Load Hours	Max. Hours	Emission Factor	Emission Factor Units	Emission Factor Source	Control Efficiency	Actual Emissions (lb/hr)	Actual Emissions (TPY)	Maximum Uncontrolled (lb/hr)	Maximum Uncontrolled (TPY)	Permit Limit (TPY)	Potential Emissions (lb/hr)	Potential Emissions (TPY)
MTST-00-CS-UNL-1	MS 13	N/A	Partial Enclosure	N/A	Rail Car Dump, PM	1400	917	8760	1.03E-03	lb/ton	AP-42, Section 13.2.4, Equation 1	0.5	7.19E-01	0.330	1.44	6.30	N/A	0.719	3.149
MTST-00-CS-UNL-1	MS 13	N/A	Partial Enclosure	N/A	Rail Car Dump, PM10	1400	917	8760	4.86E-04	lb/ton	AP-42, Section 13.2.4, Equation 1	0.5	3.40E-01	0.156	0.68	2.98	N/A	0.340	1.489
MTST-00-CS-FDR-A1	MS 13	N/A	Underground	N/A	Feeder From Rail Car Dump to Conveyor MTST-00-CS-CNV-B	700	1,834	8760	1.03E-03	lb/ton	AP-42, Section 13.2.4, Equation 1	0.99	7.19E-03	0.007	0.72	3.15	N/A	0.007	0.031
MTST-00-CS-FDR-A1	MS 13	N/A	Underground	N/A	Feeder From Rail Car Dump to Conveyor MTST-00-CS-CNV-B	700	1,834	8760	4.86E-04	lb/ton	AP-42, Section 13.2.4, Equation 1	0.99	3.40E-03	0.003	0.34	1.49	N/A	0.003	0.015
MTST-00-CS-FDR-A2	MS 13	N/A	Underground	N/A	Feeder From Rail Car Dump to Conveyor MTST-00-CS-CNV-B	700	1,834	8760	1.03E-03	lb/ton	AP-42, Section 13.2.4, Equation 1	0.99	7.19E-03	0.007	0.72	3.15	N/A	0.007	0.031
MTST-00-CS-FDR-A2	MS 13	N/A	Underground	N/A	Feeder From Rail Car Dump to Conveyor MTST-00-CS-CNV-B	700	1,834	8760	4.86E-04	lb/ton	AP-42, Section 13.2.4, Equation 1	0.99	3.40E-03	0.003	0.34	1.49	N/A	0.003	0.015

PM Emissions	0.73	0.34	2.88	12.59	-	0.73	3.21
PM10 Emissions	0.35	0.16	1.36	5.96	-	0.35	1.52

NOTES:
Input data used in the emission calculations is provided below:

Description	Value	Units	Comment
Percent H2O Coal	5.62	%	Value from 2008 Annual Emissions Spreadsheet
Mean Wind Speed	8.0	mph	Value from 2008 Annual Emissions Spreadsheet
Actual Coal Throughput Rate	1,283,824	TPY	Value from 2008 Annual Emissions Spreadsheet

Mount Storm Power Station
Emission Calculations for: MS14(CoalHandling)

Emission Unit ID	Emission Point ID	Pollution Contro Devicel ID	Pollution Control Device Description	Source ID #	Source Description	Full Load Throughput (tph)	Typical Eq. Full Load Hours	Max. Hours	Emission Factor	Emission Factor Units	Emission Factor Source	Control Efficiency	Actual Emissions (lb/hr)	Actual Emissions (TPY)	Maximum Uncontrolled (lb/hr)	Maximum Uncontrolled (TPY)	Permit Limit (TPY)	Potential Emissions (lb/hr)	Potential Emissions (TPY)
MTST-00-CS-CNV-B	MS 14	N/A	Underground	N/A	Coal Conveyor to Crusher MTST-00-CS-CRH-2 or Conveyor MTST-00-CS-CNV-E and Sample System MTST-00-CSS-SM-B, PM	1400	917	8760	1.03E-03	lb/ton	AP-42, Section 13.2.4, Equation 1	0.99	1.44E-02	0.007	1.44	6.30	N/A	0.014	0.063
MTST-00-CS-CNV-B	MS 14	N/A	Underground	N/A	Coal Conveyor to Crusher MTST-00-CS-CRH-2 or Conveyor MTST-00-CS-CNV-E and Sample System MTST-00-CSS-SM-B, PM10	1400	917	8760	4.86E-04	lb/ton	AP-42, Section 13.2.4, Equation 1	0.99	6.80E-03	0.003	0.68	2.98	N/A	0.007	0.030

PM Emissions	0.01	0.01	1.44	6.30	-	0.01	0.06
PM10 Emissions	0.01	0.00	0.68	2.98	-	0.01	0.03

NOTES:
Input data used in the emission calculations is provided below:

Description	Value	Units	Comment
Percent H2O Coal	5.62	%	Value from 2008 Annual Emissions Spreadsheet
Mean Wind Speed	8.0	mph	Value from 2008 Annual Emissions Spreadsheet
Actual Coal Throughput Rate	1,283,824	TPY	Value from 2008 Annual Emissions Spreadsheet

Mount Storm Power Station
Emission Calculations for: MS15(CoalHandling)

Emission Unit ID	Emission Point ID	Pollution Contro Devicel ID	Pollution Control Device Description	Source ID #	Source Description	Full Load Throughput (tph)	Typical Eq. Full Load Hours	Max. Hours	Emission Factor	Emission Factor Units	Emission Factor Source	Control Efficiency	Actual Emissions (lb/hr)	Actual Emissions (TPY)	Maximum Uncontrolled (lb/hr)	Maximum Uncontrolled (TPY)	Permit Limit (TPY)	Potential Emissions (lb/hr)	Potential Emissions (TPY)
MTST-00-CS-CRH-2	MS 15	N/A	Full Enclosure	N/A	Coal Crusher #2 to Feeder MTST-00-CS-FDR-M2, PM	700	0	8760	6.00E-02	lb/ton	AP-42, Section 11.24, Table 11.24-2	0.99	0.00E+00	0.00E+00	42.00	183.96	N/A	0.420	1.840
MTST-00-CS-CRH-2	MS 15	N/A	Full Enclosure	N/A	Coal Crusher #2 to Feeder MTST-00-CS-FDR-M2, PM10	700	0	8760	2.00E-02	lb/ton	AP-42, Section 11.24, Table 11.24-2	0.99	0.00E+00	0.00E+00	14.00	61.32	N/A	0.140	0.613
MTST-00-CS-FDR-M2	MS 15	N/A	Full Enclosure	N/A	Feeder From Crusher #2 to Conveyor MTST-00-CS-CNV-C2, PM	700	0	8760	1.03E-03	lb/ton	AP-42, Section 13.2.4, Equation 1	0.99	0.00E+00	0.00E+00	0.72	3.15	N/A	0.007	0.031
MTST-00-CS-FDR-M2	MS 15	N/A	Full Enclosure	N/A	Feeder From Crusher #2 to Conveyor MTST-00-CS-CNV-C2, PM10	700	0	8760	4.86E-04	lb/ton	AP-42, Section 13.2.4, Equation 1	0.99	0.00E+00	0.00E+00	0.34	1.49	N/A	0.003	0.015
MTST-00-CSS-FDR-B	MS 15	N/A	Full Enclosure	N/A	Sample Feeder to Sample Crusher MTST-00-CSS-CRH-B, PM	250	0	8760	1.03E-03	lb/ton	AP-42, Section 13.2.4, Equation 1	0.99	0.00E+00	0.00E+00	0.26	1.12	N/A	0.003	0.011
MTST-00-CSS-FDR-B	MS 15	N/A	Full Enclosure	N/A	Sample Feeder to Sample Crusher MTST-00-CSS-CRH-B, PM10	250	0	8760	4.86E-04	lb/ton	AP-42, Section 13.2.4, Equation 1	0.99	0.00E+00	0.00E+00	0.12	0.53	N/A	0.001	0.005
MTST-00-CSS-CRH-B	MS 15	N/A	Full Enclosure	N/A	Coal Sample Crusher to Sampler MTST-00-CSS-SM-B, PM	250	0	8760	6.00E-02	lb/ton	AP-42, Section 11.24, Table 11.24-2	0.99	0.00E+00	0.00E+00	15.00	65.70	N/A	0.150	0.657
MTST-00-CSS-CRH-B	MS 15	N/A	Full Enclosure	N/A	Coal Sample Crusher to Sampler MTST-00-CSS-SM-B, PM10	250	0	8760	2.00E-02	lb/ton	AP-42, Section 11.24, Table 11.24-2	0.99	0.00E+00	0.00E+00	5.00	21.90	N/A	0.050	0.219
MTST-00-CSS-SM-B	MS 15	N/A	Full Enclosure	N/A	Automatic Sampler to Sample Cans or Conveyor MTST-00-CS-CNV-E, PM	250	0	8760	1.03E-03	lb/ton	AP-42, Section 13.2.4, Equation 1	0.99	0.00E+00	0.00E+00	0.26	1.12	N/A	0.003	0.011
MTST-00-CSS-SM-B	MS 15	N/A	Full Enclosure	N/A	Automatic Sampler to Sample Cans or Conveyor MTST-00-CS-CNV-E, PM10	250	0	8760	4.86E-04	lb/ton	AP-42, Section 13.2.4, Equation 1	0.99	0.00E+00	0.00E+00	0.12	0.53	N/A	0.001	0.005
MTST-00-CS-CNV-G	MS 15	N/A	Underground and Full Enclosure	N/A	Conveyor to Crusher MTST-00-CS-CRH-3 and Feeder MTST-00-CSS-FDR-G, PM	700	403	8760	1.03E-03	lb/ton	AP-42, Section 13.2.4, Equation 1	0.99	7.19E-03	1.45E-03	0.72	3.15	N/A	0.007	0.031
MTST-00-CS-CNV-G	MS 15	N/A	Underground and Full Enclosure	N/A	Conveyor to Crusher MTST-00-CS-CRH-3 and Feeder MTST-00-CSS-FDR-G, PM10	700	403	8760	4.86E-04	lb/ton	AP-42, Section 13.2.4, Equation 1	0.99	3.40E-03	6.84E-04	0.34	1.49	N/A	0.003	0.015

Mount Storm Power Station
Emission Calculations for: MS15(CoalHandling)

Emission Unit ID	Emission Point ID	Pollution Contro Devicel ID	Pollution Control Device Description	Source ID #	Source Description	Full Load Throughput (tph)	Typical Eq. Full Load Hours	Max. Hours	Emission Factor	Emission Factor Units	Emission Factor Source	Control Efficiency	Actual Emissions (lb/hr)	Actual Emissions (TPY)	Maximum Uncontrolled (lb/hr)	Maximum Uncontrolled (TPY)	Permit Limit (TPY)	Potential Emissions (lb/hr)	Potential Emissions (TPY)
MTST-00-CS-CRH-3	MS 15	N/A	Full Enclosure	N/A	Crusher #3 to Feeder MTST-00-CS-FDR-M3, PM	800	0	8760	6.00E-02	lb/ton	AP-42, Section 11.24, Table 11.24-2	0.99	0.00E+00	0.00E+00	48.00	210.24	N/A	0.480	2.102
MTST-00-CS-CRH-3	MS 15	N/A	Full Enclosure	N/A	Crusher #3 to Feeder MTST-00-CS-FDR-M3, PM10	800	0	8760	2.00E-02	lb/ton	AP-42, Section 11.24, Table 11.24-2	0.99	0.00E+00	0.00E+00	16.00	70.08	N/A	0.160	0.701
MTST-00-CS-FDR-M3	MS 15	N/A	Full Enclosure	N/A	Feeder From Crusher #3 to Conveyors MTST-00-CS-CNV-E or MTST-00-CS-CNV-H2, , PM	700	403	8760	1.03E-03	lb/ton	AP-42, Section 13.2.4, Equation 1	0.99	7.19E-03	1.45E-03	0.72	3.15	N/A	0.007	0.031
MTST-00-CS-FDR-M3	MS 15	N/A	Full Enclosure	N/A	Feeder From Crusher #3 to Conveyors MTST-00-CS-CNV-E or MTST-00-CS-CNV-H2, PM10	700	403	8760	4.86E-04	lb/ton	AP-42, Section 13.2.4, Equation 1	0.99	3.40E-03	6.84E-04	0.34	1.49	N/A	0.003	0.015
MTST-00-CSS-FDR-G	MS 15	N/A	Full Enclosure	N/A	Sample Feeder from MTST-00-CS-FDR-M3 to Sample Feeder MTST-00-CSS-FDR-G1, PM	250	0	8760	1.03E-03	lb/ton	AP-42, Section 13.2.4, Equation 1	0.99	0.00E+00	0.00E+00	0.26	1.12	N/A	0.003	0.011
MTST-00-CSS-FDR-G	MS 15	N/A	Full Enclosure	N/A	Sample Feeder from MTST-00-CS-FDR-M3 to Sample Feeder MTST-00-CSS-FDR-G1, PM10	250	0	8760	4.86E-04	lb/ton	AP-42, Section 13.2.4, Equation 1	0.99	0.00E+00	0.00E+00	0.12	0.53	N/A	0.001	0.005
MTST-00-CSS-FDR-G1	MS 15	N/A	Full Enclosure	N/A	Sample Feeder from MTST-00-CS-FDR-G to Sample Feeder MTST-00-CSS-FDR-G1, PM	250	0	8760	1.03E-03	lb/ton	AP-42, Section 13.2.4, Equation 1	0.99	0.00E+00	0.00E+00	0.26	1.12	N/A	0.003	0.011
MTST-00-CSS-FDR-G1	MS 15	N/A	Full Enclosure	N/A	Sample Feeder from MTST-00-CS-FDR-G to Sample Feeder MTST-00-CSS-FDR-G1, PM10	250	0	8760	4.86E-04	lb/ton	AP-42, Section 13.2.4, Equation 1	0.99	0.00E+00	0.00E+00	0.12	0.53	N/A	0.001	0.005
MTST-00-CSS-FDR-G1	MS 15	N/A	Full Enclosure	N/A	Sample Feeder to Sample Crusher MTST-00-CSS-CRH-G, PM	250	0	8760	1.03E-03	lb/ton	AP-42, Section 13.2.4, Equation 1	0.99	0.00E+00	0.00E+00	0.26	1.12	N/A	0.003	0.011
MTST-00-CSS-FDR-G1	MS 15	N/A	Full Enclosure	N/A	Sample Feeder to Sample Crusher MTST-00-CSS-CRH-G, PM10	250	0	8760	4.86E-04	lb/ton	AP-42, Section 13.2.4, Equation 1	0.99	0.00E+00	0.00E+00	0.12	0.53	N/A	0.001	0.005
MTST-00-CSS-CRH-G	MS 15	N/A	Full Enclosure	N/A	Sample Crusher to Automatic Sampler MTST-00-CSS-SM-G, PM	250	0	8760	6.00E-02	lb/ton	AP-42, Section 11.24, Table 11.24-2	0.99	0.00E+00	0.00E+00	15.00	65.70	N/A	0.150	0.657
MTST-00-CSS-CRH-G	MS 15	N/A	Full Enclosure	N/A	Sample Crusher to Automatic Sampler MTST-00-CSS-SM-G, PM10	250	0	8760	2.00E-02	lb/ton	AP-42, Section 11.24, Table 11.24-2	0.99	0.00E+00	0.00E+00	5.00	21.90	N/A	0.050	0.219

Mount Storm Power Station
Emission Calculations for: MS15(CoalHandling)

Emission Unit ID	Emission Point ID	Pollution Contro Devicel ID	Pollution Control Device Description	Source ID #	Source Description	Full Load Throughput (tph)	Typical Eq. Full Load Hours	Max. Hours	Emission Factor	Emission Factor Units	Emission Factor Source	Control Efficiency	Actual Emissions (lb/hr)	Actual Emissions (TPY)	Maximum Uncontrolled (lb/hr)	Maximum Uncontrolled (TPY)	Permit Limit (TPY)	Potential Emissions (lb/hr)	Potential Emissions (TPY)
MTST-00-CSS-SM-G	MS 15	N/A	Full Enclosure	N/A	Automatic Sampler to Sample Cans or Conveyor MTST-00-CS-CNV-E, PM	250	0	8760	6.00E-02	lb/ton	AP-42, Section 11.24, Table 11.24-2	0.954	0.00E+00	0.00E+00	15.00	65.70	N/A	0.690	3.022
MTST-00-CSS-SM-G	MS 15	N/A	Full Enclosure	N/A	Automatic Sampler to Sample Cans or Conveyor MTST-00-CS-CNV-E, PM10	250	0	8760	2.00E-02	lb/ton	AP-42, Section 11.24, Table 11.24-2	0.954	0.00E+00	0.00E+00	5.00	21.90	N/A	0.230	1.007

PM Emissions	0.01	0.003	138.44	606.37	-	1.92	8.43
PM10 Emissions	0.01	0.001	46.63	204.23	-	0.65	2.83

NOTES:
Input data used in the emission calculations is provided below:

Description	Value	Units	Comment
Percent H2O Coal	5.62	%	Value from 2008 Annual Emissions Spreadsheet
Mean Wind Speed	8.0	mph	Value from 2008 Annual Emissions Spreadsheet
Crusher PM EF	0.06	lb/ton	AP-42, Section 11.24, Table 11.24-2
Crusher PM10 EF	0.02	lb/ton	AP-42, Section 11.24, Table 11.24-2
Actual Coal Throughput Rate to Sampler	0	TPY	Value from 2008 Annual Emissions Spreadsheet
Actual Coal Throughput Rate to G to M3	281,763	TPY	Value from 2008 Annual Emissions Spreadsheet

Mount Storm Power Station
Emission Calculations for: MS16(CoalHandling)

Emission Unit ID	Emission Point ID	Pollution Contro Devicel ID	Pollution Control Device Description	Source ID #	Source Description	Full Load Throughput (tph)	Typical Eq. Full Load Hours	Max. Hours	Emission Factor	Emission Factor Units	Emission Factor Source	Control Efficiency	Actual Emissions (lb/hr)	Actual Emissions (TPY)	Maximum Uncontrolled (lb/hr)	Maximum Uncontrolled (TPY)	Permit Limit (TPY)	Potential Emissions (lb/hr)	Potential Emissions (TPY)
MTST-00-CS-CNV-E	MS 16	N/A	Full Enclosure	N/A	Coal Conveyor to Stock Out Conveyor MTST-00-CS-CNV-F, PM	2100	746	8760	1.03E-03	lb/ton	AP-42, Section 13.2.4, Equation 1	0.995	1.08E-02	0.004	2.16	9.45	N/A	0.011	0.047
MTST-00-CS-CNV-E	MS 16	N/A	Full Enclosure	N/A	Coal Conveyor to Stock Out Conveyor MTST-00-CS-CNV-F, PM10	2100	746	8760	4.86E-04	lb/ton	AP-42, Section 13.2.4, Equation 1	0.995	5.10E-03	0.002	1.02	4.47	N/A	0.005	0.022

PM Emissions	0.01	0.00	2.16	9.45	-	0.01	0.05
PM10 Emissions	0.01	0.00	1.02	4.47	-	0.01	0.02

NOTES:
Input data used in the emission calculations is provided below:

Description	Value	Units	Comment
Percent H2O Coal	5.62	%	Value from 2008 Annual Emissions Spreadsheet
Mean Wind Speed	8.0	mph	Value from 2008 Annual Emissions Spreadsheet
Actual Coal Throughput Rate	1,565,587	TPY	Value from 2008 Annual Emissions Spreadsheet

Mount Storm Power Station
Emission Calculations for: MS17(CoalHandling)

Emission Unit ID	Emission Point ID	Pollution Contro Devicel ID	Pollution Control Device Description	Source ID #	Source Description	Full Load Throughput (tph)	Typical Eq. Full Load Hours	Max. Hours	Emission Factor	Emission Factor Units	Emission Factor Source	Control Efficiency	Actual Emissions (lb/hr)	Actual Emissions (TPY)	Maximum Uncontrolled (lb/hr)	Maximum Uncontrolled (TPY)	Permit Limit (TPY)	Potential Emissions (lb/hr)	Potential Emissions (TPY)
MTST-00-CS-CNV-F	MS 17	N/A	Full Enclosure and Wet Spray	N/A	Stock Out Conveyor to Coal Storage Pile, PM	2100	746	8760	1.03E-03	lb/ton	AP-42, Section 13.2.4, Equation 1	0.391	1.31E+00	0.490	2.16	9.45	N/A	1.313	5.753
MTST-00-CS-CNV-F	MS 17	N/A	Full Enclosure and Wet Spray	N/A	Stock Out Conveyor to Coal Storage Pile, PM10	2100	746	8760	4.86E-04	lb/ton	AP-42, Section 13.2.4, Equation 1	0.391	6.21E-01	0.232	1.02	4.47	N/A	0.621	2.721

PM Emissions	1.31	0.49	2.16	9.45	-	1.31	5.75
PM10 Emissions	0.62	0.23	1.02	4.47	-	0.62	2.72

NOTES:
Input data used in the emission calculations is provided below:

Description	Value	Units	Comment
Percent H2O Coal	5.62	%	Value from 2008 Annual Emissions Spreadsheet
Mean Wind Speed	8.0	mph	Value from 2008 Annual Emissions Spreadsheet
Actual Coal Throughput Rate	1,565,587	TPY	Value from 2008 Annual Emissions Spreadsheet

Mount Storm Power Station
Emission Calculations for: MS18(CoalHandling)

Emission Unit ID	Emission Point ID	Pollution Contro Devicel ID	Pollution Control Device Description	Source ID #	Source Description	Full Load Throughput (tph)	Typical Eq. Full Load Hours	Max. Hours	Emission Factor	Emission Factor Units	Emission Factor Source	Control Efficiency	Actual Emissions (lb/hr)	Actual Emissions (TPY)	Maximum Uncontrolled (lb/hr)	Maximum Uncontrolled (TPY)	Permit Limit (TPY)	Potential Emissions (lb/hr)	Potential Emissions (TPY)
MTST-00-BLD-CSD-2	MS 18	N/A	None	N/A	Coal Truck Dump, PM	700	403	8760	1.03E-03	lb/ton	AP-42, Section 13.2.4, Equation 1	0.25	5.39E-01	0.109	0.72	3.15	N/A	0.539	2.361
MTST-00-BLD-CSD-2	MS 18	N/A	None	N/A	Coal Truck Dump, PM10	700	403	8760	4.86E-04	lb/ton	AP-42, Section 13.2.4, Equation 1	0.25	2.55E-01	0.051	0.34	1.49	N/A	0.255	1.117
MTST-00-CS-FDR-VBG1	MS 18	N/A	Underground	N/A	Feeder From Truck Dump Hoppers to Conveyor MTST-00-CS-CNV-G, PM	175	403	8760	1.03E-03	lb/ton	AP-42, Section 13.2.4, Equation 1	0.99	7.19E-03	0.001	0.18	0.79	N/A	0.002	0.008
MTST-00-CS-FDR-VBG1	MS 18	N/A	Underground	N/A	Feeder From Truck Dump Hoppers to Conveyor MTST-00-CS-CNV-G, PM10	175	403	8760	4.86E-04	lb/ton	AP-42, Section 13.2.4, Equation 1	0.99	3.40E-03	0.001	0.09	0.37	N/A	0.001	0.004
MTST-00-CS-FDR-VBG2	MS 18	N/A	Underground	N/A	Feeder From Truck Dump Hoppers to Conveyor MTST-00-CS-CNV-G, PM	175	403	8760	1.03E-03	lb/ton	AP-42, Section 13.2.4, Equation 1	0.99	7.19E-03	0.001	0.18	0.79	N/A	0.002	0.008
MTST-00-CS-FDR-VBG2	MS 18	N/A	Underground	N/A	Feeder From Truck Dump Hoppers to Conveyor MTST-00-CS-CNV-G, PM10	175	403	8760	4.86E-04	lb/ton	AP-42, Section 13.2.4, Equation 1	0.99	3.40E-03	0.001	0.09	0.37	N/A	0.001	0.004
MTST-00-CS-FDR-VBG3	MS 18	N/A	Underground	N/A	Feeder From Truck Dump Hoppers to Conveyor MTST-00-CS-CNV-G, PM	175	403	8760	1.03E-03	lb/ton	AP-42, Section 13.2.4, Equation 1	0.99	7.19E-03	0.001	0.18	0.79	N/A	0.002	0.008
MTST-00-CS-FDR-VBG3	MS 18	N/A	Underground	N/A	Feeder From Truck Dump Hoppers to Conveyor MTST-00-CS-CNV-G, PM10	175	403	8760	4.86E-04	lb/ton	AP-42, Section 13.2.4, Equation 1	0.99	3.40E-03	0.001	0.09	0.37	N/A	0.001	0.004
MTST-00-CS-FDR-VBG4	MS 18	N/A	Underground	N/A	Feeder From Truck Dump Hoppers to Conveyor MTST-00-CS-CNV-G, PM	175	403	8760	1.03E-03	lb/ton	AP-42, Section 13.2.4, Equation 1	0.99	7.19E-03	0.001	0.18	0.79	N/A	0.002	0.008

Mount Storm Power Station
Emission Calculations for: MS18(CoalHandling)

Emission Unit ID	Emission Point ID	Pollution Contro Devicel ID	Pollution Control Device Description	Source ID #	Source Description	Full Load Throughput (tph)	Typical Eq. Full Load Hours	Max. Hours	Emission Factor	Emission Factor Units	Emission Factor Source	Control Efficiency	Actual Emissions (lb/hr)	Actual Emissions (TPY)	Maximum Uncontrolled (lb/hr)	Maximum Uncontrolled (TPY)	Permit Limit (TPY)	Potential Emissions (lb/hr)	Potential Emissions (TPY)
MTST-00-CS-FDR-VBG4	MS 18	N/A	Underground	N/A	Feeder From Truck Dump Hoppers to Conveyor MTST-00-CS-CNV-G, PM10	175	403	8760	4.86E-04	lb/ton	AP-42, Section 13.2.4, Equation 1	0.99	3.40E-03	0.001	0.09	0.37	N/A	0.001	0.004

PM Emissions	0.57	0.11	1.44	6.30	-	0.55	2.39
PM10 Emissions	0.27	0.05	0.68	2.98	-	0.26	1.13

NOTES:
Input data used in the emission calculations is provided below:

Description	Value	Units	Comment
Percent H2O Coal	5.62	%	Value from 2008 Annual Emissions Spreadsheet
Mean Wind Speed	8.0	mph	Value from 2008 Annual Emissions Spreadsheet
Actual Coal Throughput Rate	281,763	TPY	Value from 2008 Annual Emissions Spreadsheet

Mount Storm Power Station
Emission Calculations for: MS19(CoalHandling)

Emission Unit ID	Emission Point ID	Pollution Contro Devicel ID	Pollution Control Device Description	Source ID #	Source Description	Full Load Throughput (tph)	Typical Eq. Full Load Hours	Max. Hours	Emission Factor	Emission Factor Units	Emission Factor Source	Control Efficiency	Actual Emissions (lb/hr)	Actual Emissions (TPY)	Maximum Uncontrolled (lb/hr)	Maximum Uncontrolled (TPY)	Permit Limit (TPY)	Potential Emissions (lb/hr)	Potential Emissions (TPY)
MTST-00-CS-FDR-VBC1	MS 19	N/A	Underground	N/A	Reclaim Feeder From Coal Pile to Conveyor MTST-00-CS-CNV-C1, PM	400	1,972	8760	1.03E-03	lb/ton	AP-42, Section 13.2.4, Equation 1	0.985	6.16E-03	0.006	0.41	1.80	N/A	0.006	0.027
MTST-00-CS-FDR-VBC1	MS 19	N/A	Underground	N/A	Reclaim Feeder From Coal Pile to Conveyor MTST-00-CS-CNV-C1, PM10	400	1,972	8760	4.86E-04	lb/ton	AP-42, Section 13.2.4, Equation 1	0.985	2.91E-03	0.003	0.19	0.85	N/A	0.003	0.013
MTST-00-CS-FDR-VBC2	MS 19	N/A	Underground	N/A	Reclaim Feeder From Coal Pile to Conveyor MTST-00-CS-CNV-C1, PM	400	1,972	8760	1.03E-03	lb/ton	AP-42, Section 13.2.4, Equation 1	0.985	6.16E-03	0.006	0.41	1.80	N/A	0.006	0.027
MTST-00-CS-FDR-VBC2	MS 19	N/A	Underground	N/A	Reclaim Feeder From Coal Pile to Conveyor MTST-00-CS-CNV-C1, PM10	400	1,972	8760	4.86E-04	lb/ton	AP-42, Section 13.2.4, Equation 1	0.985	2.91E-03	0.003	0.19	0.85	N/A	0.003	0.013
MTST-00-CS-FDR-VBC3	MS 19	N/A	Underground	N/A	Reclaim Feeder From Coal Pile to Conveyor MTST-00-CS-CNV-C1, PM	400	1,972	8760	1.03E-03	lb/ton	AP-42, Section 13.2.4, Equation 1	0.985	6.16E-03	0.006	0.41	1.80	N/A	0.006	0.027
MTST-00-CS-FDR-VBC3	MS 19	N/A	Underground	N/A	Reclaim Feeder From Coal Pile to Conveyor MTST-00-CS-CNV-C1, PM10	400	1,972	8760	4.86E-04	lb/ton	AP-42, Section 13.2.4, Equation 1	0.985	2.91E-03	0.003	0.19	0.85	N/A	0.003	0.013
MTST-00-CS-FDR-VBC4	MS 19	N/A	Underground	N/A	Reclaim Feeder From Coal Pile to Conveyor MTST-00-CS-CNV-C1, PM	400	1,972	8760	1.03E-03	lb/ton	AP-42, Section 13.2.4, Equation 1	0.985	6.16E-03	0.006	0.41	1.80	N/A	0.006	0.027
MTST-00-CS-FDR-VBC4	MS 19	N/A	Underground	N/A	Reclaim Feeder From Coal Pile to Conveyor MTST-00-CS-CNV-C1, PM10	400	1,972	8760	4.86E-04	lb/ton	AP-42, Section 13.2.4, Equation 1	0.985	2.91E-03	0.003	0.19	0.85	N/A	0.003	0.013

PM Emissions	0.02	0.02	1.64	7.20	-	0.02	0.11
PM10 Emissions	0.01	0.01	0.78	3.40	-	0.01	0.05

NOTES:
Input data used in the emission calculations is provided below:

Description	Value	Units	Comment
Percent H2O Coal	5.62	%	Value from 2008 Annual Emissions Spreadsheet
Mean Wind Speed	8.0	mph	Value from 2008 Annual Emissions Spreadsheet
Actual Coal Throughput Rate	788,914	TPY	Value from 2008 Annual Emissions Spreadsheet

Mount Storm Power Station
Emission Calculations for: MS20(CoalHandling)

Emission Unit ID	Emission Point ID	Pollution Contro Devicel ID	Pollution Control Device Description	Source ID #	Source Description	Full Load Throughput (tph)	Typical Eq. Full Load Hours	Max. Hours	Emission Factor	Emission Factor Units	Emission Factor Source	Control Efficiency	Actual Emissions (lb/hr)	Actual Emissions (TPY)	Maximum Uncontrolled (lb/hr)	Maximum Uncontrolled (TPY)	Permit Limit (TPY)	Potential Emissions (lb/hr)	Potential Emissions (TPY)
MTST-00-CS-FDR-VBH1	MS 20	N/A	Underground	N/A	Reclaim Feeder From Coal Pile to Conveyor MTST-00-CS-CNV-H1, PM	400	1,972	8760	1.03E-03	lb/ton	AP-42, Section 13.2.4, Equation 1	0.985	6.16E-03	0.006	0.41	1.80	N/A	0.006	0.027
MTST-00-CS-FDR-VBH1	MS 20	N/A	Underground	N/A	Reclaim Feeder From Coal Pile to Conveyor MTST-00-CS-CNV-H1, PM10	400	1,972	8760	4.86E-04	lb/ton	AP-42, Section 13.2.4, Equation 1	0.985	2.91E-03	0.003	0.19	0.85	N/A	0.003	0.013
MTST-00-CS-FDR-VBH2	MS 20	N/A	Underground	N/A	Reclaim Feeder From Coal Pile to Conveyor MTST-00-CS-CNV-H1, PM	400	1,972	8760	1.03E-03	lb/ton	AP-42, Section 13.2.4, Equation 1	0.985	6.16E-03	0.006	0.41	1.80	N/A	0.006	0.027
MTST-00-CS-FDR-VBH2	MS 20	N/A	Underground	N/A	Reclaim Feeder From Coal Pile to Conveyor MTST-00-CS-CNV-H1, PM10	400	1,972	8760	4.86E-04	lb/ton	AP-42, Section 13.2.4, Equation 1	0.985	2.91E-03	0.003	0.19	0.85	N/A	0.003	0.013
MTST-00-CS-FDR-VBH3	MS 20	N/A	Underground	N/A	Reclaim Feeder From Coal Pile to Conveyor MTST-00-CS-CNV-H1, PM	400	1,972	8760	1.03E-03	lb/ton	AP-42, Section 13.2.4, Equation 1	0.985	6.16E-03	0.006	0.41	1.80	N/A	0.006	0.027
MTST-00-CS-FDR-VBH3	MS 20	N/A	Underground	N/A	Reclaim Feeder From Coal Pile to Conveyor MTST-00-CS-CNV-H1, PM10	400	1,972	8760	4.86E-04	lb/ton	AP-42, Section 13.2.4, Equation 1	0.985	2.91E-03	0.003	0.19	0.85	N/A	0.003	0.013

PM Emissions	0.02	0.02	1.23	5.40	-	0.02	0.08
PM10 Emissions	0.01	0.01	0.58	2.55	-	0.01	0.04

NOTES:
Input data used in the emission calculations is provided below:

Description	Value	Units	Comment
Percent H2O Coal	5.62	%	Value from 2008 Annual Emissions Spreadsheet
Mean Wind Speed	8.0	mph	Value from 2008 Annual Emissions Spreadsheet
Actual Coal Throughput Rate	788,914	TPY	Value from 2008 Annual Emissions Spreadsheet

Mount Storm Power Station
Emission Calculations for: MS21(CoalHandling)

Emission Unit ID	Emission Point ID	Pollution Contro Devicel ID	Pollution Control Device Description	Source ID #	Source Description	Full Load Throughput (tph)	Typical Eq. Full Load Hours	Max. Hours	Emission Factor	Emission Factor Units	Emission Factor Source	Control Efficiency	Actual Emissions (lb/hr)	Actual Emissions (TPY)	Maximum Uncontrolled (lb/hr)	Maximum Uncontrolled (TPY)	Permit Limit (lb/hr)	Potential Emissions (lb/hr)	Potential Emissions (TPY)
MTST-00-BLD	MS 21	N/A	Partial Enclosure	N/A	Mettiki Coal Truck Dump Enclosure (Transfer Point DP1), PM	1,200	660.7	8760	1.03E-03	lb/ton	AP-42, Section 13.2.4, Equation 1	99%	1.23E-02	0.004	1.23E+00	1.54	1.23E-02	1.23E-02	1.54E-02
MTST-00-BLD	MS 21	N/A	Partial Enclosure	N/A	Mettiki Coal Truck Dump Enclosure (Transfer Point DP1), PM10	1,200	660.7	8760	4.86E-04	lb/ton	AP-42, Section 13.2.4, Equation 1	99%	5.83E-03	0.002	5.83E-01	0.73	5.83E-03	5.83E-03	7.29E-03
MTST-00-CS-FDR-S1	MS 21	N/A	Full Enclosure	N/A	Feeder From Truck to Conveyor MTST-00-CS-CNV-S1a (Transfer Point DP2), PM	300	2,642.9	8760	1.03E-03	lb/ton	AP-42, Section 13.2.4, Equation 1	99%	3.08E-03	0.004	3.08E-01	1.54	3.08E-03	3.08E-03	1.54E-02
MTST-00-CS-FDR-S1	MS 21	N/A	Full Enclosure	N/A	Feeder From Truck to Conveyor MTST-00-CS-CNV-S1a (Transfer Point DP2), PM10	300	2,642.9	8760	4.86E-04	lb/ton	AP-42, Section 13.2.4, Equation 1	99%	1.46E-03	0.002	1.46E-01	0.73	1.46E-03	1.46E-03	7.29E-03
MTST-00-CS-FDR-S2	MS 21	N/A	Full Enclosure	N/A	Feeder From Truck to Conveyor MTST-00-CS-CNV-S1a (Transfer Point DP2), PM	300	2,642.9	8760	1.03E-03	lb/ton	AP-42, Section 13.2.4, Equation 1	99%	3.08E-03	0.004	3.08E-01	1.54	3.08E-03	3.08E-03	1.54E-02
MTST-00-CS-FDR-S2	MS 21	N/A	Full Enclosure	N/A	Feeder From Truck to Conveyor MTST-00-CS-CNV-S1a (Transfer Point DP2), PM10	300	2,642.9	8760	4.86E-04	lb/ton	AP-42, Section 13.2.4, Equation 1	99%	1.46E-03	0.002	1.46E-01	0.73	1.46E-03	1.46E-03	7.29E-03
MTST-00-CS-FDR-S3	MS 21	N/A	Full Enclosure	N/A	Feeder From Truck to Conveyor MTST-00-CS-CNV-S1a (Transfer Point DP2), PM	300	2,642.9	8760	1.03E-03	lb/ton	AP-42, Section 13.2.4, Equation 1	90%	3.08E-02	0.041	3.08E-01	1.54	3.08E-02	3.08E-02	1.54E-01
MTST-00-CS-FDR-S3	MS 21	N/A	Full Enclosure	N/A	Feeder From Truck to Conveyor MTST-00-CS-CNV-S1a (Transfer Point DP2), PM10	300	2,642.9	8760	4.86E-04	lb/ton	AP-42, Section 13.2.4, Equation 1	90%	1.46E-02	0.019	1.46E-01	0.73	1.46E-02	1.46E-02	7.29E-02
MTST-00-CS-FDR-S4	MS 21	N/A	Full Enclosure	N/A	Feeder From Truck to Conveyor MTST-00-CS-CNV-S1a (Transfer Point DP2), PM	300	2,642.9	8760	1.03E-03	lb/ton	AP-42, Section 13.2.4, Equation 1	90%	3.08E-02	0.041	3.08E-01	1.54	3.08E-02	3.08E-02	1.54E-01
MTST-00-CS-FDR-S4	MS 21	N/A	Full Enclosure	N/A	Feeder From Truck to Conveyor MTST-00-CS-CNV-S1a (Transfer Point DP2), PM10	300	2,642.9	8760	4.86E-04	lb/ton	AP-42, Section 13.2.4, Equation 1	90%	1.46E-02	0.019	1.46E-01	0.73	1.46E-02	1.46E-02	7.29E-02

PM Emissions	0.08	0.09	2.46	7.70	-	0.08	0.35
PM10 Emissions	0.04	0.04	1.17	3.64	-	0.04	0.17

NOTES:
Input data used in the emission calculations is provided below:

Description	Value	Units	Comment
Percent H2O Coal	5.62	%	Value from 2008 Annual Emissions Spreadsheet
Mean Wind Speed	8.0	mph	Value from 2008 Annual Emissions Spreadsheet
Actual Coal Throughput Rate	792,880	TPY	Value from 2008 Annual Emissions Spreadsheet
Permitted Coal Throughput Rate	3,000,000	TPY	Title V permit condition 5.1.

Mount Storm Power Station
Emission Calculations for: MS22(CoalHandling)

Emission Unit ID	Emission Point ID	Pollution Contro Devicel ID	Pollution Control Device Description	Source ID #	Source Description	Full Load Throughput (tph)	Typical Eq. Full Load Hours	Max. Hours	Emission Factor	Emission Factor Units	Emission Factor Source	Control Efficiency	Actual Emissions (lb/hr)	Actual Emissions (TPY)	Maximum Uncontrolled (lb/hr)	Maximum Uncontrolled (TPY)	Permit Limit (lb/hr)	Potential Emissions (lb/hr)	Potential Emissions (TPY)
MTST-00-CS-CNV-S1a	MS 22	N/A	Underground and Full Enclosure	N/A	Conveyor Sla to Slb (Transfer Point T1), PM	1,200	660.7	8760	1.03E-03	lb/ton	AP-42, Section 13.2.4, Equation 1	99%	1.23E-02	0.004	1.23E+00	1.54	1.23E-02	1.23E-02	1.54E-02
MTST-00-CS-CNV-S1a	MS 22	N/A	Underground and Full Enclosure	N/A	Conveyor Sla to Slb (Transfer Point T1), PM10	1,200	660.7	8760	4.86E-04	lb/ton	AP-42, Section 13.2.4, Equation 1	99%	5.83E-03	0.002	5.83E-01	0.73	5.83E-03	5.83E-03	7.29E-03
MTST-00-CS-CNV-S1a	MS 22	N/A	Underground and Full Enclosure	N/A	Existing Truck Dump to existing Silo Feed (S-1a) to existing Conveyor S1-b or New Transfer Conveyor S-3a, PM	1,200	660.7	8760	1.03E-03	lb/ton	AP-42, Section 13.2.4, Equation 1	99%	1.23E-02	0.004	1.23E+00	1.54	1.23E-02	1.23E-02	1.54E-02
MTST-00-CS-CNV-S1a	MS 22	N/A	Underground and Full Enclosure	N/A	Existing Truck Dump to existing Silo Feed (S-1a) to existing Conveyor S1-b or New Transfer Conveyor S-3a, PM10	1,200	660.7	8760	4.86E-04	lb/ton	AP-42, Section 13.2.4, Equation 1	99%	5.83E-03	0.002	5.83E-01	0.73	5.83E-03	5.83E-03	7.29E-03

PM Emissions	0.02	0.01	2.46	3.08	-	0.02	0.03
PM10 Emissions	0.01	0.00	1.17	1.46	-	0.01	0.01

NOTES:

(1) Emission unit is not currently in use.

Input data used in the emission calculations is provided below:

Description	Value	Units	Comment
Percent H2O Coal	5.62	%	Value from 2008 Annual Emissions Spreadsheet
Mean Wind Speed	8.0	mph	Value from 2008 Annual Emissions Spreadsheet
Actual Coal Throughput Rate	792,880	TPY	Value from 2008 Annual Emissions Spreadsheet
Permitted Coal Throughput Rate	3,000,000	TPY	Title V permit condition 5.1.

Mount Storm Power Station
Emission Calculations for: MS23(CoalHandling)

Emission Unit ID	Emission Point ID	Pollution Contro Devicel ID	Pollution Control Device Description	Source ID #	Source Description	Full Load Throughput (tph)	Typical Eq. Full Load Hours	Max. Hours	Emission Factor	Emission Factor Units	Emission Factor Source	Control Efficiency	Actual Emissions (lb/hr)	Actual Emissions (TPY)	Maximum Uncontrolled (lb/hr)	Maximum Uncontrolled (TPY)	Permit Limit (lb/hr)	Potential Emissions (lb/hr)	Potential Emissions (TPY)
MTST-00-CS-CNV-S1b	MS 23	N/A	Full Enclosure	N/A	Conveyor Slb to Conveyor S2 (Transfer Point DP5), PM	1,200	2,230.8	8760	1.03E-03	lb/ton	AP-42, Section 13.2.4, Equation 1	99%	1.23E-02	0.014	1.23E+00	1.54	1.23E-02	1.23E-02	1.54E-02
MTST-00-CS-CNV-S1b	MS 23	N/A	Full Enclosure	N/A	Conveyor Slb to Conveyor S2 (Transfer Point DP5), PM10	1,200	2,230.8	8760	4.86E-04	lb/ton	AP-42, Section 13.2.4, Equation 1	99%	5.83E-03	0.007	5.83E-01	0.73	5.83E-03	5.83E-03	7.29E-03

PM Emissions	0.01	0.01	1.23	1.54	-	0.01	0.02
PM10 Emissions	0.01	0.01	0.58	0.73	-	0.01	0.01

NOTES:

Input data used in the emission calculations is provided below:

Description	Value	Units	Comment
Percent H2O Coal	5.62	%	Value from 2008 Annual Emissions Spreadsheet
Mean Wind Speed	8.0	mph	Value from 2008 Annual Emissions Spreadsheet
Actual Coal Throughput Rate	2,676,907	TPY	Value from 2008 Annual Emissions Spreadsheet
Permitted Coal Throughput Rate	3,000,000	TPY	Title V permit condition 5.1.

Mount Storm Power Station
Emission Calculations for: MS24(CoalHandling)

Emission Unit ID	Emission Point ID	Pollution Contro Devicel ID	Pollution Control Device Description	Source ID #	Source Description	Full Load Throughput (tph)	Typical Eq. Full Load Hours	Max. Hours	Emission Factor	Emission Factor Units	Emission Factor Source	Control Efficiency	Actual Emissions (lb/hr)	Actual Emissions (TPY)	Maximum Uncontrolled (lb/hr)	Maximum Uncontrolled (TPY)	Permit Limit (lb/hr)	Potential Emissions (lb/hr)	Potential Emissions (TPY)
MTST-00-CS-CNV-S3a	MS 24	N/A	Partial Enclosure	N/A	Transfer Conveyor S-3a to Radial Stacker S-5 or Transfer Conveyor S-4, PM	1,200	660.7	2083	1.03E-03	lb/ton	AP-42, Section 13.2.4, Equation 1	90%	1.23E-01	0.041	1.23E+00	1.28	1.23E-01	1.23E-01	1.28E-01
MTST-00-CS-CNV-S3a	MS 24	N/A	Partial Enclosure	N/A	Transfer Conveyor S-3a to Radial Stacker S-5 or Transfer Conveyor S-4, PM10	1,200	660.7	2083	4.86E-04	lb/ton	AP-42, Section 13.2.4, Equation 1	90%	5.83E-02	0.019	5.83E-01	0.61	5.83E-02	5.83E-02	6.07E-02

PM Emissions	0.12	0.04	1.23	1.28	-	0.12	0.13
PM10 Emissions	0.06	0.02	0.58	0.61	-	0.06	0.06

NOTES:

Input data used in the emission calculations is provided below:

Description	Value	Units	Comment
Percent H2O Coal	5.62	%	Value from 2008 Annual Emissions Spreadsheet
Mean Wind Speed	8.0	mph	Value from 2008 Annual Emissions Spreadsheet
Actual Coal Throughput Rate	792,880	TPY	Value from 2008 Annual Emissions Spreadsheet
Permitted Coal Throughput Rate	2,500,000	TPY	Title V permit condition 5.1.

Mount Storm Power Station
Emission Calculations for: MS25(CoalHandling)

Emission Unit ID	Emission Point ID	Pollution Contro Devicel ID	Pollution Control Device Description	Source ID #	Source Description	Full Load Throughput (tph)	Typical Eq. Full Load Hours	Max. Hours	Emission Factor	Emission Factor Units	Emission Factor Source	Control Efficiency	Actual Emissions (lb/hr)	Actual Emissions (TPY)	Maximum Uncontrolled (lb/hr)	Maximum Uncontrolled (TPY)	Permit Limit (lb/hr)	Potential Emissions (lb/hr)	Potential Emissions (TPY)
MTST-00-CS-CNV-S4	MS 25	N/A	Partial Enclosure	N/A	Transfer Conveyor S-4 to Radial Stacker S-6, PM	1,200	660.7	2083	1.03E-03	lb/ton	AP-42, Section 13.2.4, Equation 1	90%	1.23E-01	0.041	1.23E+00	1.28	1.23E-01	1.23E-01	1.28E-01
MTST-00-CS-CNV-S4	MS 25	N/A	Partial Enclosure	N/A	Transfer Conveyor S-4 to Radial Stacker S-6, PM10	1,200	660.7	2083	4.86E-04	lb/ton	AP-42, Section 13.2.4, Equation 1	90%	5.83E-02	0.019	5.83E-01	0.61	5.83E-02	5.83E-02	6.07E-02

PM Emissions	0.12	0.04	1.23	1.28	-	0.12	0.13
PM10 Emissions	0.06	0.02	0.58	0.61	-	0.06	0.06

NOTES:

Input data used in the emission calculations is provided below:

Description	Value	Units	Comment
Percent H2O Coal	5.62	%	Value from 2008 Annual Emissions Spreadsheet
Mean Wind Speed	8.0	mph	Value from 2008 Annual Emissions Spreadsheet
Actual Coal Throughput Rate	792,880	TPY	Value from 2008 Annual Emissions Spreadsheet
Permitted Coal Throughput Rate	2,500,000	TPY	Title V permit condition 5.1.7

Mount Storm Power Station
Emission Calculations for: MS26(CoalHandling)

Emission Unit ID	Emission Point ID	Pollution Contro Devicel ID	Pollution Control Device Description	Source ID #	Source Description	Full Load Throughput (tph)	Typical Eq. Full Load Hours	Max. Hours	Emission Factor	Emission Factor Units	Emission Factor Source	Control Efficiency	Actual Emissions (lb/hr)	Actual Emissions (TPY)	Maximum Uncontrolled (lb/hr)	Maximum Uncontrolled (TPY)	Permit Limit (lb/hr)	Potential Emissions (lb/hr)	Potential Emissions (TPY)
MTST-00-CS-CNV-S5	MS 26	N/A	Partial Enclosure	N/A	Radial Stacker S-5 to Open Pile (OP-1), PM	1,200	660.7	2083	1.03E-03	lb/ton	AP-42, Section 13.2.4, Equation 1	90%	1.23E-01	0.041	1.23E+00	1.28	1.23E-01	1.23E-01	1.28E-01
MTST-00-CS-CNV-S5	MS 26	N/A	Partial Enclosure	N/A	Radial Stacker S-5 to Open Pile (OP-1), PM10	1,200	660.7	2083	4.86E-04	lb/ton	AP-42, Section 13.2.4, Equation 1	90%	5.83E-02	0.019	5.83E-01	0.61	5.83E-02	5.83E-02	6.07E-02

PM Emissions	0.12	0.04	1.23	1.28	-	0.12	0.13
PM10 Emissions	0.06	0.02	0.58	0.61	-	0.06	0.06

NOTES:

(1) MS26 and MS27 the identical drop point, therefore emissions listed for MS26 are representitve of emissions for both emission points.

Input data used in the emission calculations is provided below:

Description	Value	Units	Comment
Percent H2O Coal	5.62	%	Value from 2008 Annual Emissions Spreadsheet
Mean Wind Speed	8.0	mph	Value from 2008 Annual Emissions Spreadsheet
Actual Coal Throughput Rate	792,880	TPY	Value from 2008 Annual Emissions Spreadsheet
Permitted Coal Throughput Rate	2,500,000	TPY	Title V permit condition 5.1.7

Mount Storm Power Station
Emission Calculations for: MS28(CoalHandling)

Emission Unit ID	Emission Point ID	Pollution Contro Devicel ID	Pollution Control Device Description	Source ID #	Source Description	Full Load Throughput (tph)	Typical Eq. Full Load Hours	Max. Hours	Emission Factor	Emission Factor Units	Emission Factor Source	Control Efficiency	Actual Emissions (lb/hr)	Actual Emissions (TPY)	Maximum Uncontrolled (lb/hr)	Maximum Uncontrolled (TPY)	Permit Limit (lb/hr)	Potential Emissions (lb/hr)	Potential Emissions (TPY)
MTST-00-CS-CNV-S6	MS 28	N/A	Partial Enclosure	N/A	Radial Stacker S-6 to Open Pile (OP-2), PM	1,200	660.7	2083	1.03E-03	lb/ton	AP-42, Section 13.2.4, Equation 1	90%	1.23E-01	0.041	1.23E+00	1.28	1.23E-01	1.23E-01	1.28E-01
MTST-00-CS-CNV-S6	MS 28	N/A	Partial Enclosure	N/A	Radial Stacker S-6 to Open Pile (OP-2), PM10	1,200	660.7	2083	4.86E-04	lb/ton	AP-42, Section 13.2.4, Equation 1	90%	5.83E-02	0.019	5.83E-01	0.61	5.83E-02	5.83E-02	6.07E-02

PM Emissions	0.12	0.04	1.23	1.28	-	0.12	0.13
PM10 Emissions	0.06	0.02	0.58	0.61	-	0.06	0.06

NOTES:

(1) MS28 and MS29 the identical drop point, therefore emissions listed for MS28 are representitve of emissions for both emission points.

Input data used in the emission calculations is provided below:

Description	Value	Units	Comment
Percent H2O Coal	5.62	%	Value from 2008 Annual Emissions Spreadsheet
Mean Wind Speed	8.0	mph	Value from 2008 Annual Emissions Spreadsheet
Actual Coal Throughput Rate	792,880	TPY	Value from 2008 Annual Emissions Spreadsheet
Permitted Coal Throughput Rate	2,500,000	TPY	Title V permit condition 5.1.7

Mount Storm Power Station
Emission Calculations for: MS30(CoalHandling)

Emission Unit ID	Emission Point ID	Pollution Contro Devicel ID	Pollution Control Device Description	Source ID #	Source Description	Full Load Throughput (tph)	Typical Eq. Full Load Hours	Max. Hours	Emission Factor	Emission Factor Units	Emission Factor Source	Control Efficiency	Actual Emissions (lb/hr)	Actual Emissions (TPY)	Maximum Uncontrolled (lb/hr)	Maximum Uncontrolled (TPY)	Permit Limit (lb/hr)	Potential Emissions (lb/hr)	Potential Emissions (TPY)
BD-T7	MS 30	N/A	Underground	N/A	Bulldozer to Reclaim Feeders, PM	1,200	660.7	7150	1.03E-03	lb/ton	AP-42, Section 13.2.4, Equation 1	90%	1.23E-01	0.041	1.23E+00	1.28	1.23E-01	1.23E-01	1.28E-01
BD-T7	MS 30	N/A	Underground	N/A	Bulldozer to Reclaim Feeders, PM10	1,200	660.7	7150	4.86E-04	lb/ton	AP-42, Section 13.2.4, Equation 1	90%	5.83E-02	0.019	5.83E-01	0.61	5.83E-02	5.83E-02	6.07E-02

PM Emissions	0.12	0.04	1.23	1.28	-	0.12	0.13
PM10 Emissions	0.06	0.02	0.58	0.61	-	0.06	0.06

NOTES:

Input data used in the emission calculations is provided below:

Description	Value	Units	Comment
Percent H2O Coal	5.62	%	Value from 2008 Annual Emissions Spreadsheet
Mean Wind Speed	8.0	mph	Value from 2008 Annual Emissions Spreadsheet
Actual Coal Throughput Rate	792,880	TPY	Value from 2008 Annual Emissions Spreadsheet
Permitted Coal Throughput Rate	2,500,000	TPY	Title V permit condition 5.1.7

Mount Storm Power Station
Emission Calculations for: MS31(CoalHandling)

Emission Unit ID	Emission Point ID	Pollution Contro Devicel ID	Pollution Control Device Description	Source ID #	Source Description	Full Load Throughput (tph)	Typical Eq. Full Load Hours	Max. Hours	Emission Factor	Emission Factor Units	Emission Factor Source	Control Efficiency	Actual Emissions (lb/hr)	Actual Emissions (TPY)	Maximum Uncontrolled (lb/hr)	Maximum Uncontrolled (TPY)	Permit Limit (lb/hr)	Potential Emissions (lb/hr)	Potential Emissions (TPY)
MTST-00-CS-FDR-1	MS 31	N/A	Underground	N/A	Reclaim Feeder to Reclaim Coal Conveyor T, PM	1,000	792.9	2500	1.03E-03	lb/ton	AP-42, Section 13.2.4, Equation 1	99%	1.03E-02	0.004	1.03E+00	1.28	1.03E-02	1.03E-02	1.28E-02
MTST-00-CS-FDR-1	MS 31	N/A	Underground	N/A	Reclaim Feeder to Reclaim Coal Conveyor T, PM10	1,000	792.9	2500	4.86E-04	lb/ton	AP-42, Section 13.2.4, Equation 1	99%	4.86E-03	0.002	4.86E-01	0.61	4.86E-03	4.86E-03	6.07E-03
MTST-00-CS-FDR-2	MS 31	N/A	Underground	N/A	Reclaim Feeder to Reclaim Coal Conveyor T, PM	1,000	792.9	2500	1.03E-03	lb/ton	AP-42, Section 13.2.4, Equation 1	99%	1.03E-02	0.004	1.03E+00	1.28	1.03E-02	1.03E-02	1.28E-02
MTST-00-CS-FDR-2	MS 31	N/A	Underground	N/A	Reclaim Feeder to Reclaim Coal Conveyor T, PM10	1,000	792.9	2500	4.86E-04	lb/ton	AP-42, Section 13.2.4, Equation 1	99%	4.86E-03	0.002	4.86E-01	0.61	4.86E-03	4.86E-03	6.07E-03

PM Emissions	0.01	0.00	1.03	1.28	-	0.01	0.01
PM10 Emissions	0.00	0.00	0.49	0.61	-	0.00	0.01

NOTES:

Input data used in the emission calculations is provided below:

Description	Value	Units	Comment
Percent H2O Coal	5.62	%	Value from 2008 Annual Emissions Spreadsheet
Mean Wind Speed	8.0	mph	Value from 2008 Annual Emissions Spreadsheet
Actual Coal Throughput Rate	792,880	TPY	Value from 2008 Annual Emissions Spreadsheet
Permitted Coal Throughput Rate	2,500,000	TPY	Title V permit condition 5.1.7

Mount Storm Power Station
Emission Calculations for: MS32(CoalHandling)

Emission Unit ID	Emission Point ID	Pollution Contro Devicel ID	Pollution Control Device Description	Source ID #	Source Description	Full Load Throughput (tph)	Typical Eq. Full Load Hours	Max. Hours	Emission Factor	Emission Factor Units	Emission Factor Source	Control Efficiency	Actual Emissions (lb/hr)	Actual Emissions (TPY)	Maximum Uncontrolled (lb/hr)	Maximum Uncontrolled (TPY)	Permit Limit (lb/hr)	Potential Emissions (lb/hr)	Potential Emissions (TPY)
MTST-00-CS-CNV-T	MS 32	N/A	Underground & Partial Enclosure	N/A	Reclaim Conveyor T to Existing P-1 Conveyor, PM	1,200	660.7	2083	1.03E-03	lb/ton	AP-42, Section 13.2.4, Equation 1	99%	1.23E-02	0.004	1.23E+00	1.28	1.23E-02	1.23E-02	1.28E-02
MTST-00-CS-CNV-T	MS 32	N/A	Underground & Partial Enclosure	N/A	Reclaim Conveyor T to Existing P-1 Conveyor PM10	1,200	660.7	2083	4.86E-04	lb/ton	AP-42, Section 13.2.4, Equation 1	99%	5.83E-03	0.002	5.83E-01	0.61	5.83E-03	5.83E-03	6.07E-03

PM Emissions	0.01	0.00	1.23	1.28	-	0.01	0.01
PM10 Emissions	0.01	0.00	0.58	0.61	-	0.01	0.01

NOTES:

Input data used in the emission calculations is provided below:

Description	Value	Units	Comment
Percent H2O Coal	5.62	%	Value from 2008 Annual Emissions Spreadsheet
Mean Wind Speed	8.0	mph	Value from 2008 Annual Emissions Spreadsheet
Actual Coal Throughput Rate	792,880	TPY	Value from 2008 Annual Emissions Spreadsheet
Permitted Coal Throughput Rate	2,500,000	TPY	Title V permit condition 5.1.7

Mount Storm Power Station
Emission Calculations for: MS33(CoalHandling)

Emission Unit ID	Emission Point ID	Pollution Contro Devicel ID	Pollution Control Device Description	Source ID #	Source Description	Full Load Throughput (tph)	Typical Eq. Full Load Hours	Max. Hours	Emission Factor	Emission Factor Units	Emission Factor Source	Control Efficiency	Actual Emissions (lb/hr)	Actual Emissions (TPY)	Maximum Uncontrolled (lb/hr)	Maximum Uncontrolled (TPY)	Permit Limit (lb/hr)	Potential Emissions (lb/hr)	Potential Emissions (TPY)
MTST-00-CS-CNV-P2	MS 33	N/A	Full Enclosure	N/A	New Transfer on P-1 Conveyor to P-2 Conveyor, PM	1,600	495.6	1563	1.03E-03	lb/ton	AP-42, Section 13.2.4, Equation 1	99%	1.64E-02	0.004	1.64E+00	1.28	1.64E-02	1.64E-02	1.28E-02
MTST-00-CS-CNV-P2	MS 33	N/A	Full Enclosure	N/A	New Transfer on P-1 Conveyor to P-2 Conveyor, PM10	1,600	495.6	1563	4.86E-04	lb/ton	AP-42, Section 13.2.4, Equation 1	99%	7.77E-03	0.002	7.77E-01	0.61	7.77E-03	7.77E-03	6.07E-03

PM Emissions	0.02	0.00	1.64	1.28	-	0.02	0.01
PM10 Emissions	0.01	0.00	0.78	0.61	-	0.01	0.01

NOTES:

Input data used in the emission calculations is provided below:

Description	Value	Units	Comment
Percent H2O Coal	5.62	%	Value from 2008 Annual Emissions Spreadsheet
Mean Wind Speed	8.0	mph	Value from 2008 Annual Emissions Spreadsheet
Actual Coal Throughput Rate	792,880	TPY	Value from 2008 Annual Emissions Spreadsheet
Permitted Coal Throughput Rate	2,500,000	TPY	Title V permit condition 5.1.7

Mount Storm Power Station
Emission Calculations for: MS34(CoalHandling)

Emission Unit ID (1)	Emission Point ID	Pollution Contro Devicel ID	Pollution Control Device Description	Source ID #	Source Description	Full Load Throughput (tph)	Typical Eq. Full Load Hours	Max. Hours	Emission Factor	Emission Factor Units	Emission Factor Source	Control Efficiency	Actual Emissions (lb/hr)	Actual Emissions (TPY)	Maximum Uncontrolled (lb/hr)	Maximum Uncontrolled (TPY)	Permit Limit (lb/hr)	Potential Emissions (lb/hr)	Potential Emissions (TPY)
C-SF-1	MS 34	N/A	Full Enclosure	N/A	Conveyor SF-1, PM	1,600	0.0	8760	1.03E-03	lb/ton	AP-42, Section 13.2.4, Equation 1	99%	0.00E+00	0.00E+00	1.23	5.40	1.23E-02	1.23E-02	0.015
C-SF-1	MS 34	N/A	Full Enclosure	N/A	Conveyor SF-1 PM10	1,600	0.0	8760	4.86E-04	lb/ton	AP-42, Section 13.2.4, Equation 1	99%	0.00E+00	0.00E+00	0.58	2.55	5.83E-03	5.83E-03	0.007

PM Emissions	0.00	0.00	1.23	5.40	-	0.01	0.02
PM10 Emissions	0.00	0.00	0.58	2.55	-	0.01	0.01

NOTES:
(1) Emission unit is not currently in use.
Input data used in the emission calculations is provided below:

Description	Value	Units	Comment
Percent H2O Coal	5.62	%	Value from 2008 Annual Emissions Spreadsheet
Mean Wind Speed	8.0	mph	Value from 2008 Annual Emissions Spreadsheet
Actual Coal Throughput Rate	0	TPY	Value from 2008 Annual Emissions Spreadsheet
Permitted Coal Throughput Rate	3,000,000	TPY	Title V permit condition 5.1.
Permitted Coal Throughput Rate	1,200	TPH	Title V permit condition 5.1.

Mount Storm Power Station
Emission Calculations for: MS35(CoalHandling)

Emission Unit ID (1)	Emission Point ID	Pollution Contro Devicel ID	Pollution Control Device Description	Source ID #	Source Description	Full Load Throughput (tph)	Typical Eq. Full Load Hours	Max. Hours	Emission Factor	Emission Factor Units	Emission Factor Source	Control Efficiency	Actual Emissions (lb/hr)	Actual Emissions (TPY)	Maximum Uncontrolled (lb/hr)	Maximum Uncontrolled (TPY)	Permit Limit (lb/hr)	Potential Emissions (lb/hr)	Potential Emissions (TPY)
C-SF-2	MS 35	N/A	Partial Enclosure	N/A	Conveyor SF-2, PM	1,000	0.0	8760	1.03E-03	lb/ton	AP-42, Section 13.2.4, Equation 1	99%	0.00E+00	0.00E+00	1.03	4.50	1.03E-02	1.03E-02	0.013
C-SF-2	MS 35	N/A	Partial Enclosure	N/A	Conveyor SF-2, PM10	1,000	0.0	8760	4.86E-04	lb/ton	AP-42, Section 13.2.4, Equation 1	99%	0.00E+00	0.00E+00	0.49	2.13	4.86E-03	4.86E-03	0.006

PM Emissions	0.00	0.00	1.03	4.50	-	0.01	0.01
PM10 Emissions	0.00	0.00	0.49	2.13	-	0.00	0.01

NOTES:

(1) Emission unit is not typically used and had no throughput in 2008.

Input data used in the emission calculations is provided below:

Description	Value	Units	Comment
Percent H2O Coal	5.62	%	Value from 2008 Annual Emissions Spreadsheet
Mean Wind Speed	8.0	mph	Value from 2008 Annual Emissions Spreadsheet
Actual Coal Throughput Rate	0	TPY	Value from 2008 Annual Emissions Spreadsheet
Permitted Coal Throughput Rate	3,000,000	TPY	Title V permit condition 5.1.
Permitted Coal Throughput Rate	1,200	TPH	Title V permit condition 5.1.

Mount Storm Power Station
Emission Calculations for: MS36(CoalHandling)

Emission Unit ID (1)	Emission Point ID	Pollution Contro Devicel ID	Pollution Control Device Description	Source ID #	Source Description	Full Load Throughput (tph)	Typical Eq. Full Load Hours	Max. Hours	Emission Factor	Emission Factor Units	Emission Factor Source	Control Efficiency	Actual Emissions (lb/hr)	Actual Emissions (TPY)	Maximum Uncontrolled (lb/hr)	Maximum Uncontrolled (TPY)	Permit Limit (lb/hr)	Potential Emissions (lb/hr)	Potential Emissions (TPY)
MTST-00-CS-CNV-R	MS 36	N/A	Partial Enclosure	N/A	Conveyor MTST-00-CS-CNV-R, PM	1,600	0.0	8760	1.03E-03	lb/ton	AP-42, Section 13.2.4, Equation 1	99%	0.00E+00	0.000	1.64E+00	7.20	1.64E-02	1.64E-02	2.05E-02
MTST-00-CS-CNV-R	MS 36	N/A	Partial Enclosure	N/A	Conveyor MTST-00-CS-CNV-R, PM10	1,600	0.0	8760	4.86E-04	lb/ton	AP-42, Section 13.2.4, Equation 1	99%	0.00E+00	0.000	7.77E-01	3.40	7.77E-03	7.77E-03	9.71E-03

PM Emissions	0.00	0.00	1.64	7.20	-	0.02	0.02
PM10 Emissions	0.00	0.00	0.78	3.40	-	0.01	0.01

NOTES:

(1) Emission unit is not typically used and had no throughput in 2008.

Input data used in the emission calculations is provided below:

Description	Value	Units	Comment
Percent H2O Coal	5.62	%	Value from 2008 Annual Emissions Spreadsheet
Mean Wind Speed	8.0	mph	Value from 2008 Annual Emissions Spreadsheet
Actual Coal Throughput Rate	0	TPY	Value from 2008 Annual Emissions Spreadsheet
Permitted Coal Throughput Rate	3,000,000	TPY	Title V permit condition 5.1.
Permitted Coal Throughput Rate	1,200	TPH	Title V permit condition 5.1.

Mount Storm Power Station
Emission Calculations for: MS37(LimestoneHandling)

Emission Unit ID	Emission Point ID	Pollution Contro Devicel ID	Pollution Control Device Description	Source ID #	Source Description	Full Load Throughput (tph)	Typical Eq. Full Load Hours	Max. Hours	Emission Factor	Emission Factor Units	Emission Factor Source	Control Efficiency	Actual Emissions (lb/hr)	Actual Emissions (TPY)	Maximum Uncontrolled (lb/hr)	Maximum Uncontrolled (TPY)	Permit Limit (lb/hr)	Potential Emissions (lb/hr)	Potential Emissions (TPY)
MTST-00-BLD-LSUB-1	MS37	PE	Partial Enclosure & Baghouse 2ca	N/A	Limestone Truck Unloading Enclosure to Limestone Hoppers MTST-00-SAR-HPR-1A & 1B (2sa), PM	600	425	590	0.0014	lb/ton	AP-42, Section 13.2.4, Equation 1	0.475	0.4416	0.094	0.841	0.25	0.13	0.13	0.04
MTST-00-BLD-LSUB-1	MS37	PE	Partial Enclosure & Baghouse 2ca	N/A	Limestone Truck Unloading Enclosure to Limestone Hoppers MTST-00-SAR-HPR-1A & 1B (2sa), PM10	300	851	1180	0.0007	lb/ton	AP-42, Section 13.2.4, Equation 1	0.475	0.1044	0.044	0.199	0.12	0.06	0.06	0.04
MTST-00-SAR-HPR-1A	MS37	FE	Full Enclosure & Baghouse 2ca	N/A	Limestone Hopper to Feeder MTST-FDR-1A, PM	300	851	1180	0.0014	lb/ton	AP-42, Section 13.2.4, Equation 1	0.99	0.0042	0.002	0.421	0.25	0.00	0.00	0.00
MTST-00-SAR-HPR-1A	MS37	FE	Full Enclosure & Baghouse 2ca	N/A	Limestone Hopper to Feeder MTST-FDR-1A, PM10	300	851	1180	0.0007	lb/ton	AP-42, Section 13.2.4, Equation 1	0.99	0.0020	0.001	0.199	0.12	0.00	0.00	0.00
MTST-00-SAR-HPR-1B	MS37	FE	Full Enclosure & Baghouse 2ca	N/A	Limestone Hopper to Feeder MTST-FDR-1B, PM	300	851	1180	0.0014	lb/ton	AP-42, Section 13.2.4, Equation 1	0.99	0.0042	0.002	0.421	0.25	0.00	0.00	0.00
MTST-00-SAR-HPR-1B	MS37	FE	Full Enclosure & Baghouse 2ca	N/A	Limestone Hopper to Feeder MTST-FDR-1B, PM10	300	851	1180	0.0007	lb/ton	AP-42, Section 13.2.4, Equation 1	0.99	0.0020	0.001	0.199	0.12	0.00	0.00	0.00
MTST-00-SAR-FDR-1A	MS37	FE	Full Enclosure & Baghouse 2ca	N/A	Limestone Unloading Feeder to Conveyor MTST-00-SAR-CNV-A, PM	600	425	590	0.0014	lb/ton	AP-42, Section 13.2.4, Equation 1	0.99	0.0084	0.002	0.841	0.25	0.00	0.002	0.001
MTST-00-SAR-FDR-1A	MS37	FE	Full Enclosure & Baghouse 2ca	N/A	Limestone Unloading Feeder to Conveyor MTST-00-SAR-CNV-A, PM10	600	425	590	0.0007	lb/ton	AP-42, Section 13.2.4, Equation 1	0.99	0.0040	0.001	0.398	0.12	0.00	0.001	0.000

Mount Storm Power Station
Emission Calculations for: MS37(LimestoneHandling)

Emission Unit ID	Emission Point ID	Pollution Contro Devicel ID	Pollution Control Device Description	Source ID #	Source Description	Full Load Throughput (tph)	Typical Eq. Full Load Hours	Max. Hours	Emission Factor	Emission Factor Units	Emission Factor Source	Control Efficiency	Actual Emissions (lb/hr)	Actual Emissions (TPY)	Maximum Uncontrolled (lb/hr)	Maximum Uncontrolled (TPY)	Permit Limit (lb/hr)	Potential Emissions (lb/hr)	Potential Emissions (TPY)
MTST-00-SAR-FDR-1B	MS37	FE	Full Enclosure & Baghouse 2ca	N/A	Limestone Unloading Feeder to Conveyor MTST-00-SAR-CNV-A, PM	600	425	590	0.0014	lb/ton	AP-42, Section 13.2.4, Equation 1	0.99	0.0084	0.002	0.841	0.25	0.00	0.002	0.001
MTST-00-SAR-FDR-1B	MS37	FE	Full Enclosure & Baghouse 2ca	N/A	Limestone Unloading Feeder to Conveyor MTST-00-SAR-CNV-A, PM10	600	425	590	0.0007	lb/ton	AP-42, Section 13.2.4, Equation 1	0.99	0.0040	0.001	0.398	0.12	0.00	0.001	0.000

PM Emissions	0.4668	0.1011	3.36	1.24	-	0.14	0.04
PM10 Emissions	0.1164	0.0470	1.39	0.59	-	0.07	0.04

NOTES:

Input data used in the emission calculations is provided below:

Description	Value	Units	Comment
Percent H2O Limestone	4.5	%	Value from Annual Emissions Spreadsheet
Percent H2O Coal	4.5	%	Value from 2008 Annual Emissions Spreadsheet
Mean Wind Speed	8.0	mph	Value from Annual Emissions Spreadsheet
Annual Limestone Consumed	255,282	TPY	Value from 2008 Annual Emissions Spreadsheet
Hours of Operation Limestone Delivered	1,276	hr/yr	Calculated based on 2008 annual troughput and maxumum feed rate
Annual Limestone Delivered	255,282	TPY	Throughput is for both Units and is based on 2008 data
Permitted throughput	354,000	TPY	Permit condition 6.1.1

Mount Storm Power Station
Emission Calculations for: MS38(LimestoneHandling)

Emission Unit ID	Emission Point ID	Pollution Contro Devicel ID	Pollution Control Device Description	Source ID #	Source Description	Full Load Throughput (tph)	Typical Eq. Full Load Hours	Max. Hours	Emissio n Factor	Emission Factor Units	Emission Factor Source	Control Efficiency	Actual Emissions (lb/hr)	Actual Emissions (TPY)	Maximum Uncontrolled (lb/hr)	Maximum Uncontroll ed (TPY)	Permit Limit (lb/hr)	Potential Emissions (lb/hr)	Potential Emissions (TPY)
MTST-00-SAR-CNV-A	MS38	FE	Full Enclosure & Baghouse 3cb	N/A	Limestone Conveyor (4sa) from Unloading Feeders to Storage Dome and Sample System PM	600	425	590	0.0014	lb/ton	AP-42, Section 13.2.4,	0.99	0.0084	0.0018	0.841	0.25	0.008	0.008	0.002
MTST-00-SAR-CNV-A	MS38	FE	Full Enclosure & Baghouse 3cb	N/A	Limestone Conveyor (4sa) from Unloading Feeders to Storage Dome and Sample System PM10	600	425	590	0.0007	lb/ton	AP-42, Section 13.2.4, Equation 1	0.99	0.0040	0.0008	0.398	0.12	0.004	0.004	0.001

Annual Emissions PM	0.008	0.002	0.841	0.248	-	0.01	0.002
Annual Emissions PM10	0.004	0.001	0.398	0.117	-	0.004	0.001

NOTES:

Input data used in the emission calculations is provided below:

Description	Value	Units	Comment
Percent H2O Limestone	4.5	%	Value from 2008 Annual Emissions Spreadsheet
Mean Wind Speed	8.0	mph	Value from Annual Emissions Spreadsheet
Annual Limestone Consumed	255,282	TPY	Value from 2008 Annual Emissions Spreadsheet
Hours of Operation Limestone Delivered	1,276	hr/yr	Calculated based on 2008 annual throughput and maximum feed rate
Annual Limestone Delivered	255,282	TPY	Throughput is for both Units and is based on 2008 data
Permitted throughput	354,000	TPY	Permit condition 6.1.1

Mount Storm Power Station
Emission Calculations for: MS39(LimestoneHandling)

Emission Unit ID	Emission Point ID	Pollution Contro Devicel ID	Pollution Control Device Description	Source ID #	Source Description	Full Load Throughput (TPY)	Typical Eq. Full Load Hours	Max. Hours	Emissio n Factor	Emission Factor Units	Emission Factor Source	Control Efficiency	Actual Emissions (lb/hr)	Actual Emissions (TPY)	Maximum Uncontrolled (lb/hr)	Maximum Uncontroll ed (TPY)	Permit Limit (lb/hr)	Potential Emissions (lb/hr)	Potential Emissions (TPY)
MTST-00-SAR-SM-1	MS39	FE	Full Enclosure	N/A	Limestone Sampler to Feeder MTST-00-SAR-FDR-1 PM	7	26.9	37	0.0014	lb/ton	AP-42, Section 13.2.4,	0.99	9.81E-05	1.32E-06	0.0098	0.000	N/A	9.81E-05	1.83E-06
MTST-00-SAR-SM-1	MS39	FE	Full Enclosure	N/A	Limestone Sampler to Feeder MTST-00-SAR-FDR-1 PM10	7	26.9	37	0.0007	lb/ton	AP-42, Section 13.2.4,	0.99	4.64E-05	6.24E-07	0.0046	0.000	N/A	4.64E-05	8.65E-07
MTST-00-SAR-FDR-1	MS39	FE	Full Enclosure	N/A	Limestone Sample System Primary Feeder to Sample Crusher MTST-00-SAR-CRH-2 PM	7	26.9	37	0.0014	lb/ton	AP-42, Section 13.2.4, Equation 1	0.99	9.81E-05	1.32E-06	0.0098	0.000	N/A	9.81E-05	1.83E-06
MTST-00-SAR-FDR-1	MS39	FE	Full Enclosure	N/A	Limestone Sample System Primary Feeder to Sample Crusher MTST-00-SAR-CRH-2 PM10	7	26.9	37	0.0007	lb/ton	AP-42, Section 13.2.4, Equation 1	0.99	4.64E-05	6.24E-07	0.0046	0.000	N/A	4.64E-05	8.65E-07
MTST-00-SAR-CRH-2	MS39	FE	Full Enclosure	N/A	Limestone Sample Crusher (3sg) PM	7	26.9	37	0.0014	lb/ton	AP-42, Section 13.2.4,	0.99	9.81E-05	1.32E-06	0.0098	0.000	N/A	9.81E-05	1.83E-06
MTST-00-SAR-CRH-2	MS39	FE	Full Enclosure	N/A	Limestone Sample Crusher (3sg) PM10	7	26.9	37	0.0007	lb/ton	AP-42, Section 13.2.4,	0.99	4.64E-05	6.24E-07	0.0046	0.000	N/A	4.64E-05	8.65E-07
MTST-00-SAR-FDR-2	MS39	FE	Full Enclosure	N/A	Limestone Sample System Secondary Feeder to Secondary Sampler 00-SAR-SM-2 and Conveyor MTST-00-SAR-CNV-D PM	7	26.9	37	0.0014	lb/ton	AP-42, Section 13.2.4, Equation 1	0.99	9.81E-05	1.32E-06	0.0098	0.000	N/A	9.81E-05	1.83E-06
MTST-00-SAR-FDR-2	MS39	FE	Full Enclosure	N/A	Limestone Sample System Secondary Feeder to Secondary Sampler 00-SAR-SM-2 and Conveyor MTST_00-SAR-CNV-D PM10	7	26.9	37	0.0007	lb/ton	AP-42, Section 13.2.4, Equation 1	0.99	4.64E-05	6.24E-07	0.0046	0.000	N/A	4.64E-05	8.65E-07
MTST-00-SAR-SM-2	MS39	FE	Full Enclosure	N/A	Secondary Sampler to Sample Collector MTST-00-SAR-CNV-A PM	7	26.9	37	0.0014	lb/ton	AP-42, Section 13.2.4,	0.99	9.81E-05	1.32E-06	0.0098	0.000	N/A	9.81E-05	1.83E-06
MTST-00-SAR-SM-2	MS39	FE	Full Enclosure	N/A	Secondary Sampler to Sample Collector MTST-00-SAR-CNV-A PM10	7	26.9	37	0.0007	lb/ton	AP-42, Section 13.2.4,	0.99	4.64E-05	6.24E-07	0.0046	0.000	N/A	4.64E-05	8.65E-07

Mount Storm Power Station
Emission Calculations for: MS39(LimestoneHandling)

Emission Unit ID	Emission Point ID	Pollution Contro Devicel ID	Pollution Control Device Description	Source ID #	Source Description	Full Load Throughput (TPY)	Typical Eq. Full Load Hours	Max. Hours	Emissio n Factor	Emission Factor Units	Emission Factor Source	Control Efficiency	Actual Emissions (lb/hr)	Actual Emissions (TPY)	Maximum Uncontrolled (lb/hr)	Maximum Uncontroll ed (TPY)	Permit Limit (lb/hr)	Potential Emissions (lb/hr)	Potential Emissions (TPY)
MTST-00-SAR-CNV-D	MS39	FE	Full Enclosure	N/A	Bucket Conveyor (3se) Back to Conveyor MTST-00-SAR-CNV-A PM	7	26.9	37	0.0014	lb/ton	AP-42, Section 13.2.4,	0.99	9.81E-05	1.32E-06	0.0098	0.000	N/A	9.81E-05	1.83E-06
MTST-00-SAR-CNV-D	MS39	FE	Full Enclosure	N/A	Bucket Conveyor (3se) Back to Conveyor MTST-00-SAR-CNV-A PM10	7	26.9	37	0.0007	lb/ton	AP-42, Section 13.2.4,	0.99	4.64E-05	6.24E-07	0.0046	0.000	N/A	4.64E-05	8.65E-07

Annual Emissions PM	5.89E-04	7.92E-06	0.059	0.001	-	5.89E-04	1.10E-05
Annual Emissions PM10	2.78E-04	3.74E-06	0.028	0.001	-	2.78E-04	5.19E-06

NOTES:

Input data used in the emission calculations is provided below:

Description	Value	Units	Comment
Percent H2O Limestone	4.5	%	Value from Annual Emissions Spreadsheet
Mean Wind Speed	8.0	mph	Value from Annual Emissions Spreadsheet
Annual Limestone Consumed	188	TPY	Value from 2008 Annual Emissions Spreadsheet
Permitted throughput	261	TPY	Permit condition 6.1.1

Mount Storm Power Station
Emission Calculations for: MS40(LimestoneHandling)

Emission Unit ID	Emission Point ID	Pollution Contro Devicel ID	Pollution Control Device Description	Source ID #	Source Description	Full Load Throughput (tph)	Typical Eq. Full Load Hours	Max. Hours	Emission Factor	Emission Factor Units	Emission Factor Source	Control Efficiency	Actual Emissions (lb/hr)	Actual Emissions (TPY)	Maximum Uncontrolled (lb/hr)	Maximum Uncontrolled (TPY)	Permit Limit (lb/hr)	Potential Emissions (lb/hr)	Potential Emissions (TPY)
MTST-00-BLD-LS-D	MS40	FE	Full Enclosure	N/A	Limestone Storage Dome (5sa) PM	10,000 tons	8760	8760	-	-	-	-	-	-	-	-	-	-	-
MTST-00-BLD-LS-D	MS40	FE	Full Enclosure	N/A	Limestone Storage Dome (5sa) PM10	10,000 tons	8760	8760	-	-	-	-	-	-	-	-	-	-	-
MTST-00-SAR-FDR-2A	MS40	UG	Underground	N/A	Limestone Reclaim Feeder to Conveyor MTST-00-SAR-CNV-B PM	400	638	885	0.0014	lb/ton	AP-42, Section 13.2.4,	0.99	0.009	0.00285	0.5607	0.248	0.012	1.24E-02	5.49E-03
MTST-00-SAR-FDR-2A	MS40	UG	Underground	N/A	Limestone Reclaim Feeder to Conveyor MTST-00-SAR-CNV-B PM10	400	638	885	0.0007	lb/ton	AP-42, Section 13.2.4,	0.99	0.004	0.00135	0.2652	0.117	0.006	5.87E-03	2.60E-03
MTST-00-SAR-FDR-2B	MS40	UG	Underground	N/A	Limestone Reclaim Feeder to Conveyor MTST-00-SAR-CNV-B PM	400	638	885	0.0014	lb/ton	AP-42, Section 13.2.4,	0.99	0.009	0.00285	0.5607	0.248	0.012	1.24E-02	5.49E-03
MTST-00-SAR-FDR-2B	MS40	UG	Underground	N/A	Limestone Reclaim Feeder to Conveyor MTST-00-SAR-CNV-B PM10	400	638	885	0.0007	lb/ton	AP-42, Section 13.2.4,	0.99	0.004	0.00135	0.2652	0.117	0.006	5.87E-03	2.60E-03
MTST-00-SAR-FDR-2C	MS40	UG	Underground	N/A	Limestone Reclaim Feeder to Conveyor MTST-00-SAR-CNV-B PM	400	638	885	0.0014	lb/ton	AP-42, Section 13.2.4,	0.99	0.009	0.00285	0.5607	0.248	0.012	1.24E-02	5.49E-03
MTST-00-SAR-FDR-2C	MS40	UG	Underground	N/A	Limestone Reclaim Feeder to Conveyor MTST-00-SAR-CNV-B PM10	400	638	885	0.0007	lb/ton	AP-42, Section 13.2.4,	0.99	0.004	0.00135	0.2652	0.117	0.006	5.87E-03	2.60E-03

Annual Emissions PM	0.03	0.01	1.68	0.74	-	0.04	0.02
Annual Emissions PM10	0.01	0.00	0.80	0.35	-	0.02	0.01

NOTES:

Input data used in the emission calculations is provided below:

Description	Value	Units	Comment
Percent H2O Limestone	4.5	%	Value from Annual Emissions Spreadsheet
Mean Wind Speed	8.0	mph	Value from Annual Emissions Spreadsheet
Annual Limestone Consumed	255,282	TPY	Value from 2008 Annual Emissions Spreadsheet
Permitted throughput	354,000	TPY	Permit condition 6.1.1

Mount Storm Power Station
Emission Calculations for: MS41(LimestoneHandling)

Emission Unit ID	Emission Point ID	Pollution Contro Devicel ID	Pollution Control Device Description	Source ID #	Source Description	Full Load Throughput (tph)	Typical Eq. Full Load Hours	Max. Hours	Emissio n Factor	Emission Factor Units	Emission Factor Source	Control Efficiency	Actual Emissions (lb/hr)	Actual Emissions (TPY)	Maximum Uncontrolled (lb/hr)	Maximum Uncontroll ed (TPY)	Permit Limit (lb/hr)	Potential Emissions (lb/hr)	Potential Emissions (TPY)
MTST-00-SAR-CNV-B	MS41	FE & BH	Full Enclosure & Baghouse 6cc	N/A	Conveyor from Limestone and Fuel Hoppers to Crusher Building (Fuel) PM	400	638	8760	0.0014	lb/ton	AP-42, Section 13.2.4,	0.99	0.009	0.003	0.56071496	2.46	0.01	0.01	0.05
MTST-00-SAR-CNV-B	MS41	FE & BH	Full Enclosure & Baghouse 6cc	N/A	Conveyor from Limestone and Fuel Hoppers to Crusher Building (Fuel) PM10	400	638	8760	0.0007	lb/ton	AP-42, Section 13.2.4,	0.99	0.004	0.001	0.26520302	1.16	0.01	0.01	0.03

Annual Emissions PM	8.95E-03	2.85E-03	5.61E-01	2.46E+00	-	1.24E-02	5.43E-02
Annual Emissions PM10	4.23E-03	1.35E-03	2.65E-01	1.16E+00	-	5.87E-03	2.57E-02

NOTES:
Input data used in the emission calculations is provided below:

Description	Value	Units	Comment
Percent H2O Limestone	4.5	%	Value from Annual Emissions Spreadsheet
Mean Wind Speed	8.0	mph	Value from Annual Emissions Spreadsheet
Annual Limestone Consumed	255,282	TPY	Value from 2008 Annual Emissions Spreadsheet
Permitted throughput	354,000	TPY	Permit condition 6.1.1

Mount Storm Power Station
Emission Calculations for: MS42(LimestoneHandling)

Emission Unit ID	Emission Point ID	Pollution Contro Devicel ID	Pollution Control Device Description	Source ID #	Source Description	Full Load Throughput (tph)	Typical Eq. Full Load Hours	Max. Hours	Emissio n Factor	Emission Factor Units	Emission Factor Source	Control Efficiency	Actual Emissions (lb/hr)	Actual Emissions (TPY)	Maximum Uncontrolled (lb/hr)	Maximum Uncontroll ed (TPY)	Permit Limit (lb/hr)	Potential Emissions (lb/hr)	Potential Emissions (TPY)
MTST-00-SAR-CRH-1	MS42	FE	Full Enclosure	N/A	Limestone Crusher (7sb) to Conveyor MTST-00-SAR-CNV-C PM	400	638	885	0.0054	lb/ton	AP-42, Section 11.19	0.99	0.022	0.007	2.16	0.96	0.0216	0.0216	0.01
MTST-00-SAR-CRH-1	MS42	FE	Full Enclosure	N/A	Limestone Crusher (7sb) to Conveyor MTST-00-SAR-CNV-C PM10	400	638	885	0.0024	lb/ton	AP-42, Section 11.19	0.99	0.010	0.003	0.96	0.42	0.0096	0.0096	0.00

Annual Emissions PM	2.16E-02	6.89E-03	2.16E+00	9.56E-01	-	2.16E-02	9.56E-03
Annual Emissions PM10	9.60E-03	3.06E-03	9.60E-01	4.25E-01	-	9.60E-03	4.25E-03

NOTES:

Input data used in the emission calculations is provided below:

Description	Value	Units	Comment
Percent H2O Limestone	4.50	%	Value from 2008 Annual Emissions Spreadsheet
Mean Wind Speed	8.0	mph	Value from 2008 Annual Emissions Spreadsheet
Crusher PM EF	0.0054	lb/ton	AP-42, Section 11.19, Tertiary Crushing (High-moisture ore)
Crusher PM10 EF	0.0024	lb/ton	AP-42, Section 11.19, Tertiary Crushing (High-moisture ore)
Annual Limestone Consumed	255,282	TPY	Value from 2008 Annual Emissions Spreadsheet
Permitted throughput	354,000	TPY	Permit condition 6.1.1

Mount Storm Power Station
Emission Calculations for: MS43(LimestoneHandling)

Emission Unit ID	Emission Point ID	Pollution Contro Devicel ID	Pollution Control Device Description	Source ID #	Source Description	Full Load Throughput (tph)	Typical Eq. Full Load Hours	Max. Hours	Emissio n Factor	Emission Factor Units	Emission Factor Source	Control Efficiency	Actual Emissions (lb/hr)	Actual Emissions (TPY)	Maximum Uncontrolled (lb/hr)	Maximum Uncontrolled (TPY)	Permit Limit (lb/hr)	Potential Emissions (lb/hr)	Potential Emissions (TPY)
MTST-00-SAR-CNV-C	MS43	FE	Full Enclosure	N/A	Limestone Conveyor from Crusher #1 to Shuttle Conveyor MTST-00-SAR-CNV-1 PM	400	638	885	0.0014	lb/ton	AP-42, Section 13.2.4, Equation 1	0.99	0.006	0.002	0.561	0.25	0.006	0.006	0.002
MTST-00-SAR-CNV-C	MS43	FE	Full Enclosure	N/A	Limestone Conveyor from Crusher #1 to Shuttle Conveyor MTST-00-SAR-CNV-1 PM10	400	638	885	0.0007	lb/ton	AP-42, Section 13.2.4, Equation 1	0.99	0.003	0.001	0.265	0.12	0.003	0.003	0.001
Annual Emissions PM													5.61E-03	1.79E-03	5.61E-01	2.48E-01	-	5.61E-03	2.48E-03
Annual Emissions PM10													2.65E-03	8.46E-04	2.65E-01	1.17E-01	-	2.65E-03	1.17E-03

NOTES:

Input data used in the emission calculations is provided below:

Description	Value	Units	Comment
Percent H2O Limestone	4.5	%	Value from Annual Emissions Spreadsheet
Mean Wind Speed	8.0	mph	Value from Annual Emissions Spreadsheet
Annual Limestone Consumed	255,282	TPY	Value from 2008 Annual Emissions Spreadsheet
Permitted throughput	354,000	TPY	Permit condition 6.1.1

Mount Storm Power Station
Emission Calculations for: MS44(LimestoneHandling)

Emission Unit ID	Emission Point ID	Pollution Contro Devicel ID	Pollution Control Device Description	Source ID #	Source Description	Full Load Throughput (tph)	Typical Eq. Full Load Hours	Max. Hours	Emissio n Factor	Emission Factor Units	Emission Factor Source	Control Efficiency	Actual Emissions (lb/hr)	Actual Emissions (TPY)	Maximum Uncontrolled (lb/hr)	Maximum Uncontrolled (TPY)	Permit Limit (lb/hr)	Potential Emissions (lb/hr)	Potential Emissions (TPY)
MTST-00-SAR-CNV-1	MS44	FE	Full Enclosure	N/A	Limestone Shuttle conveyor (7sd) to Silo's MTST-03-SAR-TK-1A and 1B and MTST-00-SAR-TK-1A & 1B	400	638	885	0.0014	lb/ton	AP-42, Section 13.2.4, Equation 1	0.99	0.006	0.002	0.561	0.248	0.008	0.008	0.003
MTST-00-SAR-CNV-1	MS44	FE	Full Enclosure	N/A	Limestone Shuttle conveyor (7sd) to Silo's MTST-03-SAR-TK-1A and 1B and MTST-00-SAR-TK-1A & 1B	400	638	885	0.0007	lb/ton	AP-42, Section 13.2.4, Equation 1	0.99	0.003	0.001	0.265	0.117	0.004	0.004	0.002

Annual Emissions PM	5.61E-03	1.79E-03	5.61E-01	2.48E-01	-	7.78E-03	3.44E-03
Annual Emissions PM10	2.65E-03	8.46E-04	2.65E-01	1.17E-01	-	3.68E-03	1.63E-03

NOTES:

Input data used in the emission calculations is provided below:

Description	Value	Units	Comment
Percent H2O Limestone	4.5	%	Value from Annual Emissions Spreadsheet
Mean Wind Speed	8.0	mph	Value from Annual Emissions Spreadsheet
Annual Limestone Consumed	255,282	TPY	Value from 2008 Annual Emissions Spreadsheet
Permitted throughput	354,000	TPY	Permit condition 6.1.1

Mount Storm Power Station
Emission Calculations for: MS45(LimestoneHandling)

Emission Unit ID (1)	Emission Point ID	Pollution Contro Devicel ID	Pollution Control Device Description	Source ID #	Source Description	Full Load Throughput (tph)	Typical Eq. Full Load Hours	Max. Hours	Emissio n Factor	Emission Factor Units	Emission Factor Source	Control Efficiency	Actual Emissions (lb/hr)	Actual Emissions (TPY)	Maximum Uncontrolled (lb/hr)	Maximum Uncontroll ed (TPY)	Permit Limit (lb/hr)	Potential Emissions (lb/hr)	Potential Emissions (TPY)
MTST-03-SAR-TK-1A	MS45	FE, BH-8ce	Full Enclosure & Baghouse 8ce	N/A	Limestone Storage Silo (8sa) to Weigh Feeder MTST-03-SAP-FDR-1A PM	-	-	-	-	-	-	-	0.000	0.000	0	0.00	0	0	0.00
MTST-03-SAR-TK-1A	MS45	FE, BH-8ce	Full Enclosure & Baghouse 8ce	N/A	Limestone Storage Silo (8sa) to Weigh Feeder MTST-03-SAP-FDR-1A PM10	-	-	-	-	-	-	-	0.000	0.000	0	0.00	0	0	0.00
MTST-03-SAR-TK-1B	MS45	FE,BH-8ce	Full Enclosure & Baghouse 8ce	N/A	Limestone Storage Silo (8sb) to Weigh Feeder MTST-03-SAP-FDR-1B PM	-	-	-	-	-	-	-	0.000	0.000	0	0.00	0	0	0.00
MTST-03-SAR-TK-1B	MS45	FE,BH-8ce	Full Enclosure & Baghouse 8ce	N/A	Limestone Storage Silo (8sb) to Weigh Feeder MTST-03-SAP-FDR-1B PM10	-	-	-	-	-	-	-	0.000	0.000	0	0.00	0	0	0.00
MTST-00-SAR-TK-1A	MS45	FE, BH-8ce	Full Enclosure & Baghouse 8ce	N/A	Limestone Storage Silo (8sc) to Weigh Feeder MTST-00-SAP-FDR-1A PM	-	-	-	-	-	-	-	0.000	0.000	0	0.00	0	0	0.00
MTST-00-SAR-TK-1A	MS45	FE, BH-8ce	Full Enclosure & Baghouse 8ce	N/A	Limestone Storage Silo (8sc) to Weigh Feeder MTST-00-SAP-FDR-1A PM10	-	-	-	-	-	-	-	0.000	0.000	0	0.00	0	0	0.00
MTST-00-SAR-TK-1B	MS45	FE, BH-8ce	Full Enclosure & Baghouse 8ce	N/A	Limestone Storage Silo (8sd) to Weigh Feeder MTST-03-SAP-FDR-1B PM	-	-	-	-	-	-	-	0.000	0.000	0	0.00	0	0	0.00
MTST-00-SAR-TK-1B	MS45	FE, BH-8ce	Full Enclosure & Baghouse 8ce	N/A	Limestone Storage Silo (8sd) to Weigh Feeder MTST-03-SAP-FDR-1B PM10	-	-	-	-	-	-	-	0.000	0.000	0	0.00	0	0	0.00
MTST-03-SAP-FDR-1A	MS45	FE	Full Enclosure	N/A	Limestone Weigh Feeder to Ball Mill MTST-03-SAP-CRH-1A PM	-	-	-	-	-	-	-	0.000	0.000	0	0.00	0	0	0.00
MTST-03-SAP-FDR-1A	MS45	FE	Full Enclosure	N/A	Limestone Weigh Feeder to Ball Mill MTST-03-SAP-CRH-1A PM10	-	-	-	-	-	-	-	0.000	0.000	0	0.00	0	0	0.00
MTST-03-SAP-FDR-1B	MS45	FE	Full Enclosure	N/A	Limestone Weigh Feeder to Ball Mill MTST-03-SAP-CRH-1B PM	-	-	-	-	-	-	-	0.000	0.000	0	0.00	0	0	0.00
MTST-03-SAP-FDR-1B	MS45	FE	Full Enclosure	N/A	Limestone Weigh Feeder to Ball Mill MTST-03-SAP-CRH-1B PM10	-	-	-	-	-	-	-	0.000	0.000	0	0.00	0	0	0.00
MTST-00-SAP-FDR-1A	MS45	FE	Full Enclosure	N/A	Limestone Weigh Feeder to Ball Mill MTST-00-SAP-CRH-1A PM	-	-	-	-	-	-	-	0.000	0.000	0	0.00	0	0	0.00
MTST-00-SAP-FDR-1A	MS45	FE	Full Enclosure	N/A	Limestone Weigh Feeder to Ball Mill MTST-00-SAP-CRH-1A PM10	-	-	-	-	-	-	-	0.000	0.000	0	0.00	0	0	0.00

Mount Storm Power Station
Emission Calculations for: MS45(LimestoneHandling)

Emission Unit ID (1)	Emission Point ID	Pollution Contro Devicel ID	Pollution Control Device Description	Source ID #	Source Description	Full Load Throughput (tph)	Typical Eq. Full Load Hours	Max. Hours	Emissio n Factor	Emission Factor Units	Emission Factor Source	Control Efficiency	Actual Emissions (lb/hr)	Actual Emissions (TPY)	Maximum Uncontrolled (lb/hr)	Maximum Uncontroll ed (TPY)	Permit Limit (lb/hr)	Potential Emissions (lb/hr)	Potential Emissions (TPY)
MTST-00-SAP-FDR-1B	MS45	FE	Full Enclosure	N/A	Limestone Weigh Feeder to Ball Mill MTST-00-SAP-CRH-1B PM	-	-	-	-	-	-	-	0.000	0.000	0	0.00	0	0	0.00
MTST-00-SAP-FDR-1B	MS45	FE	Full Enclosure	N/A	Limestone Weigh Feeder to Ball Mill MTST-00-SAP-CRH-1B PM10	-	-	-	-	-	-	-	0.000	0.000	0	0.00	0	0	0.00

Annual Emissions PM	0.00E+00	0.00E+00	0.00E+00	0.00E+00	-	0.00E+00	0.00E+00
Annual Emissions PM10	0.00E+00	0.00E+00	0.00E+00	0.00E+00	-	0.00E+00	0.00E+00

NOTES:
(1) The processing of limestone in the ballmills is a wet process, therefore, PM and PM10 are not emitted from this emission unit.
Input data used in the emission calculations is provided below:

Description	Value	Units	Comment
Percent H2O Ash	-	%	Value from 2008 Annual Emissions Spreadsheet
Mean Wind Speed	-	mph	Value from 2008 Annual Emissions Spreadsheet
Actual Limestone Throughput Rate	638,042	TPY	Value from 2008 Annual Emissions Spreadsheet
Permitted throughput	354,000	TPY	Permit condition 6.1.1

Mount Storm Power Station
Emission Calculations for: MS46(AshHandling)

Emission Unit ID (1)	Emission Point ID	Pollution Contro Devicel ID	Pollution Control Device Description	Source ID #	Source Description	Full Load Throughput (tph)	Typical Eq. Full Load Hours	Max. Hours	Emission Factor	Emission Factor Units	Emission Factor Source	Control Efficiency	Actual Emissions (lb/hr)	Actual Emissions (TPY)	Maximum Uncontrolled (lb/hr)	Maximum Uncontrolled (TPY)	Permit Limit (TPY)	Potential Emissions (lb/hr)	Potential Emissions (TPY)
MTST-01-ID-STK-1	MS 46	N/A	Full Enclosure	N/A	Unit 1 Fly Ash Storage Silo to Mixers MTST-01-ADF-MC-1A and 1B, PM	0	0	8760	-	-	-	-	0	0	0	0	0	0	0
MTST-01-ID-STK-1	MS 46	N/A	Full Enclosure	N/A	Unit 1 Fly Ash Storage Silo to Mixers MTST-01-ADF-MC-1A and 1B, PM10	0	0	8760	-	-	-	-	0	0	0	0	0	0	0

PM Emissions	0	0	0	0	0	0	0
PM10 Emissions	0	0	0	0	0	0	0

NOTES:
(1) All emissions from ash silos will occur in mixers, therefore, PM and PM10 are not emitted from this emission unit.
Input data used in the emission calculations is provided below:

Description	Value	Units	Comment
Percent H2O Ash	-	%	Value from 2008 Annual Emissions Spreadsheet
Mean Wind Speed	-	mph	Value from 2008 Annual Emissions Spreadsheet
Actual Fly Ash Throughput Rate	638,042	TPY	Value from 2008 Annual Emissions Spreadsheet

Mount Storm Power Station
Emission Calculations for: MS47(AshHandling)

Emission Unit ID	Emission Point ID	Pollution Contro Devicel ID	Pollution Control Device Description	Source ID #	Source Description	Full Load Throughput (tph)	Typical Eq. Full Load Hours	Max. Hours	Emission Factor	Emission Factor Units	Emission Factor Source	Control Efficiency	Actual Emissions (lb/hr)	Actual Emissions (TPY)	Maximum Uncontrolled (lb/hr)	Maximum Uncontrolled (TPY)	Permit Limit (TPY)	Potential Emissions (lb/hr)	Potential Emissions (TPY)
MTST-01-ADF-MC-1A	MS 47	N/A	Partial Enclosure	N/A	Unit 1 Primary Fly Ash Mixer to Ash Haul Trucks, PM	400	798	8760	1.74E-04	lb/ton	AP-42, Section 13.2.4, Equation 1	0	6.95E-02	2.77E-02	0.07	0.30	N/A	6.95E-02	3.04E-01
MTST-01-ADF-MC-1A	MS 47	N/A	Partial Enclosure	N/A	Unit 1 Primary Fly Ash Mixer to Ash Haul Trucks, PM10	400	798	8760	8.21E-05	lb/ton	AP-42, Section 13.2.4, Equation 1	0	3.29E-02	1.31E-02	0.03	0.14	N/A	3.29E-02	1.44E-01

PM Emissions	6.95E-02	2.77E-02	0.07	0.30	-	6.95E-02	3.04E-01
PM10 Emissions	3.29E-02	1.31E-02	0.03	0.14	-	3.29E-02	1.44E-01

NOTES:
Input data used in the emission calculations is provided below:

Description	Value	Units	Comment
Percent H2O Ash	20.00	%	Value from 2008 Annual Emissions Spreadsheet
Mean Wind Speed	8.0	mph	Value from 2008 Annual Emissions Spreadsheet
Actual Ash Throughput Rate	638,042	TPY	Value from 2008 Annual Emissions Spreadsheet, for the purposes of this calculation the throughput is equally divided between the primary and secondary mixers.

Mount Storm Power Station
Emission Calculations for: MS48(AshHandling)

Emission Unit ID	Emission Point ID	Pollution Contro Devicel ID	Pollution Control Device Description	Source ID #	Source Description	Full Load Throughput (tph)	Typical Eq. Full Load Hours	Max. Hours	Emission Factor	Emission Factor Units	Emission Factor Source	Control Efficiency	Actual Emissions (lb/hr)	Actual Emissions (TPY)	Maximum Uncontrolled (lb/hr)	Maximum Uncontrolled (TPY)	Permit Limit (TPY)	Potential Emissions (lb/hr)	Potential Emissions (TPY)
MTST-01-ADF-MC-1B	MS 48	N/A	Partial Enclosure	N/A	Unit 1 Secondary Fly Ash Mixer to Ash Haul Trucks, PM	400	798	8760	1.74E-04	lb/ton	AP-42, Section 13.2.4, Equation 1	0	6.95E-02	2.77E-02	0.07	0.30	N/A	6.95E-02	3.04E-01
MTST-01-ADF-MC-1B	MS 48	N/A	Partial Enclosure	N/A	Unit 1 Secondary Fly Ash Mixer to Ash Haul Trucks, PM10	400	798	8760	8.21E-05	lb/ton	AP-42, Section 13.2.4, Equation 1	0	3.29E-02	1.31E-02	0.03	0.14	N/A	3.29E-02	1.44E-01

PM Emissions	6.95E-02	2.77E-02	0.07	0.30	-	6.95E-02	3.04E-01
PM10 Emissions	3.29E-02	1.31E-02	0.03	0.14	-	3.29E-02	1.44E-01

NOTES:
Input data used in the emission calculations is provided below:

Description	Value	Units	Comment
Percent H2O Ash	20.00	%	Value from 2008 Annual Emissions Spreadsheet
Mean Wind Speed	8.0	mph	Value from 2008 Annual Emissions Spreadsheet
Actual Ash Throughput Rate	638,042	TPY	Value from 2008 Annual Emissions Spreadsheet, for the purposes of this calculation the throughput is equally divided between the primary and secondary mixers.

Mount Storm Power Station
Emission Calculations for: MS49(AshHandling)

Emission Unit ID (1)	Emission Point ID	Pollution Contro Devicel ID	Pollution Control Device Description	Source ID #	Source Description	Full Load Throughput (tph)	Typical Eq. Full Load Hours	Max. Hours	Emission Factor	Emission Factor Units	Emission Factor Source	Control Efficiency	Actual Emissions (lb/hr)	Actual Emissions (TPY)	Maximum Uncontrolled (lb/hr)	Maximum Uncontrolled (TPY)	Permit Limit (TPY)	Potential Emissions (lb/hr)	Potential Emissions (TPY)
MTST-02-ID-STK-1	MS 49	N/A	Full Enclosure	N/A	Unit 2 Fly Ash Storage Silo to Mixers MTST-02-ADF-MC-1A and 1B, PM	0	0	8760	-	-	-	-	0	0	0	0	0	0	0
MTST-02-ID-STK-1	MS 49	N/A	Full Enclosure	N/A	Unit 2 Fly Ash Storage Silo to Mixers MTST-02-ADF-MC-1A and 1B, PM10	0	0	8760	-	-	-	-	0	0	0	0	0	0	0

PM Emissions	0	0	0	0	0	0	0
PM10 Emissions	0	0	0	0	0	0	0

NOTES:
(1) All emissions from ash silos will occur in mixers, therefore, PM and PM10 are not emitted from this emission unit.
Input data used in the emission calculations is provided below:

Description	Value	Units	Comment
Percent H2O Ash	-	%	Value from 2008 Annual Emissions Spreadsheet
Mean Wind Speed	-	mph	Value from 2008 Annual Emissions Spreadsheet
Actual Fly Ash Throughput Rate	638,042	TPY	Value from 2008 Annual Emissions Spreadsheet

Mount Storm Power Station
Emission Calculations for: MS50(AshHandling)

Emission Unit ID	Emission Point ID	Pollution Contro Devicel ID	Pollution Control Device Description	Source ID #	Source Description	Full Load Throughput (tph)	Typical Eq. Full Load Hours	Max. Hours	Emission Factor	Emission Factor Units	Emission Factor Source	Control Efficiency	Actual Emissions (lb/hr)	Actual Emissions (TPY)	Maximum Uncontrolled (lb/hr)	Maximum Uncontrolled (TPY)	Permit Limit (TPY)	Potential Emissions (lb/hr)	Potential Emissions (TPY)
MTST-02-ADF-MC-1A	MS 50	N/A	Partial Enclosure	N/A	Unit 2 Primary Fly Ash Mixer to Ash Haul Trucks, PM	400	798	8760	1.74E-04	lb/ton	AP-42, Section 13.2.4, Equation 1	0	6.95E-02	2.77E-02	0.07	0.30	N/A	6.95E-02	3.04E-01
MTST-02-ADF-MC-1A	MS 50	N/A	Partial Enclosure	N/A	Unit 2 Primary Fly Ash Mixer to Ash Haul Trucks, PM10	400	798	8760	8.21E-05	lb/ton	AP-42, Section 13.2.4, Equation 1	0	3.29E-02	1.31E-02	0.03	0.14	N/A	3.29E-02	1.44E-01

PM Emissions	6.95E-02	2.77E-02	0.07	0.30	-	6.95E-02	3.04E-01
PM10 Emissions	3.29E-02	1.31E-02	0.03	0.14	-	3.29E-02	1.44E-01

NOTES:
Input data used in the emission calculations is provided below:

Description	Value	Units	Comment
Percent H2O Ash	20.00	%	Value from 2008 Annual Emissions Spreadsheet
Mean Wind Speed	8.0	mph	Value from 2008 Annual Emissions Spreadsheet
Actual Ash Throughput Rate	638,042	TPY	Value from 2008 Annual Emissions Spreadsheet, for the purposes of this calculation the throughput is equally divided between the primary and secondary mixers.

Mount Storm Power Station
Emission Calculations for: MS51(AshHandling)

Emission Unit ID	Emission Point ID	Pollution Contro Devicel ID	Pollution Control Device Description	Source ID #	Source Description	Full Load Throughput (tph)	Typical Eq. Full Load Hours	Max. Hours	Emission Factor	Emission Factor Units	Emission Factor Source	Control Efficiency	Actual Emissions (lb/hr)	Actual Emissions (TPY)	Maximum Uncontrolled (lb/hr)	Maximum Uncontrolled (TPY)	Permit Limit (TPY)	Potential Emissions (lb/hr)	Potential Emissions (TPY)
MTST-02-ADF-MC-1B	MS 51	N/A	Partial Enclosure	N/A	Unit 2 Secondary Fly Ash Mixer to Ash Haul Trucks, PM	300	1,063	8760	1.74E-04	lb/ton	AP-42, Section 13.2.4, Equation 1	0	5.21E-02	2.77E-02	0.05	0.23	N/A	5.21E-02	2.28E-01
MTST-02-ADF-MC-1B	MS 51	N/A	Partial Enclosure	N/A	Unit 2 Secondary Fly Ash Mixer to Ash Haul Trucks, PM10	300	1,063	8760	8.21E-05	lb/ton	AP-42, Section 13.2.4, Equation 1	0	2.46E-02	1.31E-02	0.02	0.11	N/A	2.46E-02	1.08E-01

PM Emissions	5.21E-02	2.77E-02	0.05	0.23	-	5.21E-02	2.28E-01
PM10 Emissions	2.46E-02	1.31E-02	0.02	0.11	-	2.46E-02	1.08E-01

NOTES:
Input data used in the emission calculations is provided below:

Description	Value	Units	Comment
Percent H2O Ash	20.00	%	Value from 2008 Annual Emissions Spreadsheet
Mean Wind Speed	8.0	mph	Value from 2008 Annual Emissions Spreadsheet
Actual Ash Throughput Rate	638,042	TPY	Value from 2008 Annual Emissions Spreadsheet, for the purposes of this calculation the throughput is equally divided between the primary and secondary mixers.

Mount Storm Power Station
Emission Calculations for: MS52(AshHandling)

Emission Unit ID (1)	Emission Point ID	Pollution Contro Devicel ID	Pollution Control Device Description	Source ID #	Source Description	Full Load Throughput (tph)	Typical Eq. Full Load Hours	Max. Hours	Emission Factor	Emission Factor Units	Emission Factor Source	Control Efficiency	Actual Emissions (lb/hr)	Actual Emissions (TPY)	Maximum Uncontrolled (lb/hr)	Maximum Uncontrolled (TPY)	Permit Limit (TPY)	Potential Emissions (lb/hr)	Potential Emissions (TPY)
MTST-03-ID-STK-1	MS 52	N/A	Full Enclosure	N/A	Unit 3 Fly Ash Storage Silo to Mixers MTST-03-ADF-MC-1A and 1B, PM	0	0	8760	-	-	-	-	0	0	0	0	0	0	0
MTST-03-ID-STK-1	MS 52	N/A	Full Enclosure	N/A	Unit 3 Fly Ash Storage Silo to Mixers MTST-03-ADF-MC-1A and 1B, PM10	0	0	8760	-	-	-	-	0	0	0	0	0	0	0

PM Emissions	0	0	0	0	0	0	0
PM10 Emissions	0	0	0	0	0	0	0

NOTES:
(1) All emissions from ash silos will occur in mixers, therefore, PM and PM10 are not emitted from this emission unit.
Input data used in the emission calculations is provided below:

Description	Value	Units	Comment
Percent H2O Ash	-	%	Value from 2008 Annual Emissions Spreadsheet
Mean Wind Speed	-	mph	Value from 2008 Annual Emissions Spreadsheet
Actual Fly Ash Throughput Rate	638,042	TPY	Value from 2008 Annual Emissions Spreadsheet

Mount Storm Power Station
Emission Calculations for: MS53(AshHandling)

Emission Unit ID	Emission Point ID	Pollution Contro Devicel ID	Pollution Control Device Description	Source ID #	Source Description	Full Load Throughput (tph)	Typical Eq. Full Load Hours	Max. Hours	Emission Factor	Emission Factor Units	Emission Factor Source	Control Efficiency	Actual Emissions (lb/hr)	Actual Emissions (TPY)	Maximum Uncontrolled (lb/hr)	Maximum Uncontrolled (TPY)	Permit Limit (TPY)	Potential Emissions (lb/hr)	Potential Emissions (TPY)
MTST-03-ADF-MC-1A	MS 53	N/A	Partial Enclosure	N/A	Unit 3 Primary Fly Ash Mixer to Ash Haul Trucks, PM	400	798	8760	1.74E-04	lb/ton	AP-42, Section 13.2.4, Equation 1	0	6.95E-02	2.77E-02	0.07	0.30	N/A	6.95E-02	3.04E-01
MTST-03-ADF-MC-1A	MS 53	N/A	Partial Enclosure	N/A	Unit 3 Primary Fly Ash Mixer to Ash Haul Trucks, PM10	400	798	8760	8.21E-05	lb/ton	AP-42, Section 13.2.4, Equation 1	0	3.29E-02	1.31E-02	0.03	0.14	N/A	3.29E-02	1.44E-01

PM Emissions	6.95E-02	2.77E-02	0.07	0.30	-	6.95E-02	3.04E-01
PM10 Emissions	3.29E-02	1.31E-02	0.03	0.14	-	3.29E-02	1.44E-01

NOTES:
Input data used in the emission calculations is provided below:

Description	Value	Units	Comment
Percent H2O Ash	20.00	%	Value from 2008 Annual Emissions Spreadsheet
Mean Wind Speed	8.0	mph	Value from 2008 Annual Emissions Spreadsheet
Actual Ash Throughput Rate	638,042	TPY	Value from 2008 Annual Emissions Spreadsheet, for the purposes of this calculation the throughput is equally divided between the primary and secondary mixers.

Mount Storm Power Station
Emission Calculations for: MS54(AshHandling)

Emission Unit ID	Emission Point ID	Pollution Contro Devicel ID	Pollution Control Device Description	Source ID #	Source Description	Full Load Throughput (tph)	Typical Eq. Full Load Hours	Max. Hours	Emission Factor	Emission Factor Units	Emission Factor Source	Control Efficiency	Actual Emissions (lb/hr)	Actual Emissions (TPY)	Maximum Uncontrolled (lb/hr)	Maximum Uncontrolled (TPY)	Permit Limit (TPY)	Potential Emissions (lb/hr)	Potential Emissions (TPY)
MTST-03-ADF-MC-1B	MS 54	N/A	Partial Enclosure	N/A	Unit 3 Secondary Fly Ash Mixer to Ash Haul Trucks, PM	400	1,004	8760	1.74E-04	lb/ton	AP-42, Section 13.2.4, Equation 1	0	6.95E-02	3.49E-02	0.07	0.30	N/A	6.95E-02	3.04E-01
MTST-03-ADF-MC-1B	MS 54	N/A	Partial Enclosure	N/A	Unit 3 Secondary Fly Ash Mixer to Ash Haul Trucks, PM10	400	1,004	8760	8.21E-05	lb/ton	AP-42, Section 13.2.4, Equation 1	0	3.29E-02	1.65E-02	0.03	0.14	N/A	3.29E-02	1.44E-01

PM Emissions	6.95E-02	3.49E-02	0.07	0.30	-	6.95E-02	3.04E-01
PM10 Emissions	3.29E-02	1.65E-02	0.03	0.14	-	3.29E-02	1.44E-01

NOTES:
Input data used in the emission calculations is provided below:

Description	Value	Units	Comment
Percent H2O Ash	20.00	%	Value from 2008 Annual Emissions Spreadsheet
Mean Wind Speed	8.0	mph	Value from 2008 Annual Emissions Spreadsheet
Actual Ash Throughput Rate	803,399	TPY	Value from 2008 Annual Emissions Spreadsheet, for the purposes of this calculation the throughput is equally divided between the primary and secondary mixers.

Mount Storm Power Station
Emission Calculations for: MS55(AshHandling)

Emission Unit ID	Emission Point ID	Pollution Contro Devicel ID	Pollution Control Device Description	Source ID #	Source Description	Full Load Throughput (tph) (1)	Typical Eq. Full Load Hours	Max. Hours	Emission Factor	Emission Factor Units	Emission Factor Source	Control Efficiency	Actual Emissions (lb/hr)	Actual Emissions (TPY)	Maximum Uncontrolled (lb/hr)	Maximum Uncontrolled (TPY)	Permit Limit (TPY)	Potential Emissions (lb/hr)	Potential Emissions (TPY)
MTST-00-ADB-TK-3	MS 55	N/A	Full Enclosure	N/A	Pyrite Storage Tank to Mixer MTST-00-ADB-MC-1, PM	0	0	8760	-	-	-	-	0	0	0	0	0	0	0
MTST-00-ADB-TK-3	MS 55	N/A	Full Enclosure	N/A	Pyrite Storage Tank to Mixer MTST-00-ADB-MC-1, PM10	0	0	8760	-	-	-	-	0	0	0	0	0	0	0

PM Emissions	0	0	0	0	0	0	0
PM10 Emissions	0	0	0	0	0	0	0

NOTES:
(1) All emissions from ash silos will occure in mixers, therefore, throughput for this emission unit is set to zero.
Input data used in the emission calculations is provided below:

Description	Value	Units	Comment
Percent H2O Ash	-	%	Value from 2008 Annual Emissions Spreadsheet
Mean Wind Speed	-	mph	Value from 2008 Annual Emissions Spreadsheet
Actual Pyrite Throughput Rate	51,157	TPY	Value from 2008 Annual Emissions Spreadsheet

Mount Storm Power Station
Emission Calculations for: MS56(AshHandling)

Emission Unit ID	Emission Point ID	Pollution Contro Devicel ID	Pollution Control Device Description	Source ID #	Source Description	Full Load Throughput (tph)	Typical Eq. Full Load Hours	Max. Hours	Emission Factor	Emission Factor Units	Emission Factor Source	Control Efficiency	Actual Emissions (lb/hr)	Actual Emissions (TPY)	Maximum Uncontrolled (lb/hr)	Maximum Uncontrolled (TPY)	Permit Limit (TPY)	Potential Emissions (lb/hr)	Potential Emissions (TPY)
MTST-00-ADB-MC-1	MS 56	N/A	Moisture Content	N/A	Pyrite Mixer to Ash Haul Trucks, PM	200	256	8760	1.74E-04	lb/ton	AP-42, Section 13.2.4, Equation 1	0	3.47E-02	4.44E-03	0.03	0.15	N/A	3.47E-02	1.52E-01
MTST-00-ADB-MC-1	MS 56	N/A	Moisture Content	N/A	Pyrite Mixer to Ash Haul Trucks, PM10	200	256	8760	8.21E-05	lb/ton	AP-42, Section 13.2.4, Equation 1	0	1.64E-02	2.10E-03	0.02	0.07	N/A	1.64E-02	7.20E-02

PM Emissions	3.47E-02	4.44E-03	0.03	0.15	-	3.47E-02	1.52E-01
PM10 Emissions	1.64E-02	2.10E-03	0.02	0.07	-	1.64E-02	7.20E-02

NOTES:
Input data used in the emission calculations is provided below:

Description	Value	Units	Comment
Percent H2O Ash	20.00	%	Value from 2008 Annual Emissions Spreadsheet
Mean Wind Speed	8.0	mph	Value from 2008 Annual Emissions Spreadsheet
Actual Ash Throughput Rate	51,157	TPY	Value from 2008 Annual Emissions Spreadsheet

Mount Storm Power Station
Emission Calculations for: MS57(FGDByProductHandling)

Emission Unit ID	Emission Point ID	Pollution Contro Devicel ID	Pollution Control Device Description	Source ID #	Source Description	Full Load Throughput (tph)	Typical Eq. Full Load Hours	Max. Hours	Emission Factor	Emission Factor Units	Emission Factor Source	Control Efficiency	Actual Emissions (lb/hr)	Actual Emissions (TPY)	Maximum Uncontrolled (lb/hr)	Maximum Uncontrolled (TPY)	Permit Limit (TPY)	Potential Emissions (lb/hr)	Potential Emissions (TPY)
MTST-00-SWD-M-FL-1A	MS 57	N/A	Full Enclosure	N/A	Vacuum Filter to De-watering Building MTST-00-BLD-DW-1, PM	27	4,693	8760	1.74E-04	lb/ton	AP-42, Section 13.2.4, Equation 1	0.99	4.69E-05	1.10E-04	0.00	0.02	N/A	4.69E-05	2.05E-04
MTST-00-SWD-M-FL-1A	MS 57	N/A	Full Enclosure	N/A	Vacuum Filter to De-watering Building MTST-00-BLD-DW-1, PM10	27	4,693	8760	8.21E-05	lb/ton	AP-42, Section 13.2.4, Equation 1	0.99	2.22E-05	5.20E-05	0.00	0.01	N/A	2.22E-05	9.71E-05
MTST-00-SWD-M-FL-1B	MS 57	N/A	Full Enclosure	N/A	Vacuum Filter to De-watering Building MTST-00-BLD-DW-1, PM	27	4,693	8760	1.74E-04	lb/ton	AP-42, Section 13.2.4, Equation 1	0.99	4.69E-05	1.10E-04	0.00	0.02	N/A	4.69E-05	2.05E-04
MTST-00-SWD-M-FL-1B	MS 57	N/A	Full Enclosure	N/A	Vacuum Filter to De-watering Building MTST-00-BLD-DW-1, PM10	27	4,693	8760	8.21E-05	lb/ton	AP-42, Section 13.2.4, Equation 1	0.99	2.22E-05	5.20E-05	0.00	0.01	N/A	2.22E-05	9.71E-05

PM Emissions	9.38E-05	2.20E-04	9.38E-03	4.11E-02	-	9.38E-05	4.11E-04
PM10 Emissions	4.44E-05	1.04E-04	4.44E-03	1.94E-02	-	4.44E-05	1.94E-04

NOTES:
Input data used in the emission calculations is provided below:

Description	Value	Units	Comment
Percent H2O Ash	20.00	%	Value from 2008 Annual Emissions Spreadsheet
Mean Wind Speed	8.0	mph	Value from 2008 Annual Emissions Spreadsheet
Actual FGD By-Product Throughput Rate	506,864	TPY	Value from 2008 Annual Emissions Spreadsheet, for the purposes of this calculation the throughput is equally divided between all four vaccum filters.

Mount Storm Power Station
Emission Calculations for: MS58(FGDByProductHandling)

Emission Unit ID	Emission Point ID	Pollution Contro Devicel ID	Pollution Control Device Description	Source ID #	Source Description	Full Load Throughput (tph)	Typical Eq. Full Load Hours	Max. Hours	Emission Factor	Emission Factor Units	Emission Factor Source	Control Efficiency	Actual Emissions (lb/hr)	Actual Emissions (TPY)	Maximum Uncontrolled (lb/hr)	Maximum Uncontrolled (TPY)	Permit Limit (TPY)	Potential Emissions (lb/hr)	Potential Emissions (TPY)
MTST-03-SWD-M-FL-1A	MS 58	N/A	Full Enclosure	N/A	Vacuum Filter to De-watering Building MTST-00-BLD-DW-1, PM	27	4,693	8760	1.74E-04	lb/ton	AP-42, Section 13.2.4, Equation 1	0.7	1.41E-03	3.30E-03	0.00	0.02	N/A	1.41E-03	6.16E-03
MTST-03-SWD-M-FL-1A	MS 58	N/A	Full Enclosure	N/A	Vacuum Filter to De-watering Building MTST-00-BLD-DW-1, PM10	27	4,693	8760	8.21E-05	lb/ton	AP-42, Section 13.2.4, Equation 1	0.7	6.65E-04	1.56E-03	0.00	0.01	N/A	6.65E-04	2.91E-03
MTST-03-SWD-M-FL-1B	MS 58	N/A	Full Enclosure	N/A	Vacuum Filter to De-watering Building MTST-00-BLD-DW-1, PM	27	4,693	8760	1.74E-04	lb/ton	AP-42, Section 13.2.4, Equation 1	0.7	1.41E-03	3.30E-03	0.00	0.02	N/A	1.41E-03	6.16E-03
MTST-03-SWD-M-FL-1B	MS 58	N/A	Full Enclosure	N/A	Vacuum Filter to De-watering Building MTST-00-BLD-DW-1, PM10	27	4,693	8760	8.21E-05	lb/ton	AP-42, Section 13.2.4, Equation 1	0.7	6.65E-04	1.56E-03	0.00	0.01	N/A	6.65E-04	2.91E-03

PM Emissions	2.81E-03	6.60E-03	9.38E-03	4.11E-02	-	2.81E-03	1.23E-02
PM10 Emissions	1.33E-03	3.12E-03	4.44E-03	1.94E-02	-	1.33E-03	5.83E-03

NOTES:
Input data used in the emission calculations is provided below:

Description	Value	Units	Comment
Percent H2O Ash	20.00	%	Value from 2008 Annual Emissions Spreadsheet
Mean Wind Speed	8.0	mph	Value from 2008 Annual Emissions Spreadsheet
Actual FGD By-Product Throughput Rate	506,864	TPY	Value from 2008 Annual Emissions Spreadsheet, for the purposes of this calculation the throughput is equally divided between all four vaccum filters.

Mount Storm Power Station
Emission Calculations for: MS59(FirePump)

Emission Unit ID	Emission Point ID	Pollution Contro Devicel ID	Pollution Control Device Description	Source ID #	Source Description	Full Load Thruput (hp)	Typical Eq. Full Load Hours	Max. Hours	Emission Factor	Emission Factor Units	Emission Factor Source	Control Efficiency	Actual Emissions (lb/hr)	Actual Emissions (TPY)	Maximum Uncontrolled (lb/hr)	Maximum Uncontrolled (TPY)	Permit Limit (lb/hr)	Potential Emissions (lb/hr)	Potential Emissisions (TPY)
MTST-00-FP-ENG-1	MS59	N/A	N/A	N/A	Diesel Fired Fire Pump, CO	188	6	500	6.68E-03	lb/hp-hr	AP-42 Ch 3.3 Table 3.3-1	N/A	1.26E+00	3.77E-03	1.26E+00	3.14E-01	N/A	1.26E+00	0.314
MTST-00-FP-ENG-1	MS59	N/A	N/A	N/A	Diesel Fired Fire Pump, NOx	188	6	500	0.031	lb/hp-hr	AP-42 Ch 3.3 Table 3.3-1	N/A	5.83E+00	1.75E-02	5.83E+00	1.46E+00	N/A	5.83E+00	1.457
MTST-00-FP-ENG-1	MS59	N/A	N/A	N/A	Diesel Fired Fire Pump, Pb	188	6	500	0	.-	-	N/A	0.00E+00	0.00E+00	0.00E+00	0.00E+00	N/A	0.00E+00	0.000
MTST-00-FP-ENG-1	MS59	N/A	N/A	N/A	Diesel Fired Fire Pump, PM	188	6	500	2.20E-03	lb/hp-hr	AP-42 Ch 3.3 Table 3.3-1	N/A	4.14E-01	1.24E-03	4.14E-01	1.03E-01	N/A	4.14E-01	0.103
MTST-00-FP-ENG-1	MS59	N/A	N/A	N/A	Diesel Fired Fire Pump, PM10	188	6	500	2.20E-03	lb/hp-hr	AP-42 Ch 3.3 Table 3.3-1	N/A	4.14E-01	1.24E-03	4.14E-01	1.03E-01	N/A	4.14E-01	0.103
MTST-00-FP-ENG-1	MS59	N/A	N/A	N/A	Diesel Fired Fire Pump, SO2	188	6	500	2.05E-03	lb/hp-hr	AP-42 Ch 3.3 Table 3.3-1	N/A	3.85E-01	1.16E-03	3.85E-01	9.64E-02	N/A	3.85E-01	0.096
MTST-00-FP-ENG-1	MS59	N/A	N/A	N/A	Diesel Fired Fire Pump, VOC	188	6	500	2.47E-03	lb/hp-hr	AP-42 Ch 3.3 Table 3.3-1	N/A	4.64E-01	1.39E-03	4.64E-01	1.16E-01	N/A	4.64E-01	0.116

Mount Storm Power Station
Emission Calculations for: MS60(FirePump)

Emission Unit ID	Emission Point ID	Pollution Contro Devicel ID	Pollution Control Device Description	Source ID #	Source Description	Full Load Thruput (hp)	Typical Eq. Full Load Hours	Max. Hours	Emission Factor	Emission Factor Units	Emission Factor Source	Control Efficiency	Actual Emissions (lb/hr)	Actual Emissions (TPY)	Maximum Uncontrolled (lb/hr)	Maximum Uncontrolled (TPY)	Permit Limit (lb/hr)	Potential Emissions (lb/hr)	Potential Emissisions (TPY)
MTST-00-FP-ENG-3	MS60	N/A	N/A	N/A	Diesel Fired Fire Pump, CO	335.5	6	500	6.68E-03	lb/hp-hr	AP-42 Ch 3.3 Table 3.3-1	N/A	2.24E+00	6.72E-03	2.24E+00	5.60E-01	N/A	2.24E+00	0.560
MTST-00-FP-ENG-3	MS60	N/A	N/A	N/A	Diesel Fired Fire Pump, NOx	335.5	6	500	0.031	lb/hp-hr	AP-42 Ch 3.3 Table 3.3-1	N/A	1.04E+01	3.12E-02	1.04E+01	2.60E+00	N/A	1.04E+01	2.600
MTST-00-FP-ENG-3	MS60	N/A	N/A	N/A	Diesel Fired Fire Pump, Pb	335.5	6	500	0	-	-	N/A	0.00E+00	0.00E+00	0.00E+00	0.00E+00	N/A	0.00E+00	0.000
MTST-00-FP-ENG-3	MS60	N/A	N/A	N/A	Diesel Fired Fire Pump, PM	335.5	6	500	2.20E-03	lb/hp-hr	AP-42 Ch 3.3 Table 3.3-1	N/A	7.38E-01	2.21E-03	7.38E-01	1.85E-01	N/A	7.38E-01	0.185
MTST-00-FP-ENG-3	MS60	N/A	N/A	N/A	Diesel Fired Fire Pump, PM10	335.5	6	500	2.20E-03	lb/hp-hr	AP-42 Ch 3.3 Table 3.3-1	N/A	7.38E-01	2.21E-03	7.38E-01	1.85E-01	N/A	7.38E-01	0.185
MTST-00-FP-ENG-3	MS60	N/A	N/A	N/A	Diesel Fired Fire Pump, SO2	335.5	6	500	2.05E-03	lb/hp-hr	AP-42 Ch 3.3 Table 3.3-1	N/A	6.88E-01	2.06E-03	6.88E-01	1.72E-01	N/A	6.88E-01	0.172
MTST-00-FP-ENG-3	MS60	N/A	N/A	N/A	Diesel Fired Fire Pump, VOC	335.5	6	500	2.47E-03	lb/hp-hr	AP-42 Ch 3.3 Table 3.3-1	N/A	8.29E-01	2.49E-03	8.29E-01	2.07E-01	N/A	8.29E-01	0.207

Mount Storm Power Station
Emission Calculations for: MS61-76(StorageTanks)

Emission Unit ID	Emission Point ID	Pollution Contro Devicel ID	Pollution Control Device Description	Source ID #	Source Description	Full Load Thruput (tph)	Typical Eq. Full Load Hours	Max. Hours	Percent H_2O	Emission Factor (lb/ton)	Control Efficiency	Actual Emissions (tpy)	Group Actual Emissions (tpy)	Max. Uncontrolled Emissions (lb/hr)	Uncontrolled Group Max. Total (lb/hr)	Percent of Goup Total	Permit Limit (lb/hr)	Calculated Controlled Source Emissions (lb/hr)
MTST-00-LO-TK-3	MS61	N/A	N/A	NA	Clean Oil Tank (Turbine Lube Oil)		8760	8760										
MTST-00-LO-TK-4	MS62	N/A	N/A	NA	Dirty Oil Tank (Turbine Lube Oil)		8760	8760										
MTST-00-FO-TK-4	MS63	N/A	N/A	NA	Jet Fuel Oil Tank for Combustion Turbine		8760	8760										
MTST-00-FO-TK-1	MS64	N/A	N/A	NA	Fuel Oil Tank for Locomotive		8760	8760										
MTST-00-FO-TK-6G	MS65	N/A	N/A	NA	Gasoline Tank-Unleaded		8760	8760										
MTST-00-IO-TK-1A	MS66	N/A	N/A	NA	Fuel Oil Tank 1A (#2 fuel oil)		8760	8760										
MTST-00-IO-TK-1B	MS67	N/A	N/A	NA	Fuel Oil Tank 1B (#2 fuel oil)		8760	8760										
1-CC-E-1A, 1-CC-E-1B, 1-CC-E-1C	MS68	N/A	N/A	NA	Cooling Tower (8 stacks)		8760	8760										
2-CC-E-1A, 2-CC-E-1B, 2-CC-E-1C	MS69	N/A	N/A	NA			8760	8760										
3-CC-E-1A, 3-CC-E-1B	MS70	N/A	N/A	NA			8760	8760										
MTST-03-OAS-TK-1C	MS71	N/A	N/A	NA	Acid Tank - Organic for Scrubber		8760	8760										
MTST-00-BLD-LTB-1	MS72	N/A	N/A	NA	Lime Silo for Water Treatment Settling Pond		8760	8760										
MTST-00-AMS-TK-1	MS73	N/A	N/A	NA	Anhydrous Ammonia Tanks		8760	8760										
MTST-00-AMS-TK-2	MS74	N/A	N/A	NA	Anhydrous Ammonia Tanks		8760	8760										
MTST-00-AMS-TK-3	MS75	N/A	N/A	NA	Anhydrous Ammonia Tanks		8760	8760										
PTK-1	MS76	N/A	N/A	NA	Polino Diesel Fuel Tank		8760	8760										

Mount Storm Power Station
Emission Calculations for: Fugitive-PavedRoads

Emission Unit ID	Emission Point ID	Pollution Contro Devicel ID	Pollution Control Device Description	Source ID #	Source Description	Maximum VMT (VMT/yr)	Typical Eq. Full Load Hours	Max. Hours	Emission Factor	Emission Factor Units	Emission Factor Source	Control Efficiency	Actual Emissions (lb/hr)	Actual Emissions (TPY)	Maximum Uncontrolled (lb/hr)	Maximum Uncontrolled (TPY)	Permit Limit (lb/hr)	Potential Emissions (lb/hr)	Potential Emissions (TPY)
RD-1 through RD-6	Fugitive	WS	Paved & Wet Spray	NA	COAL- Mettiki Dump and Fuel Blending. PM	137,379	8,760	8,760	5.84	lb/VMT	AP-42, Section 13.2.2, Equation 1b	0.9	7.87	34.47	91.56	401.03	N/A	9.16	40.10
RD-1 through RD-6	Fugitive	WS	Paved & Wet Spray	NA	COAL- Mettiki Dump and Fuel Blending, PM10	137,379	8,760	8,760	1.14	lb/VMT	AP-42, Section 13.2.2, Equation 1b	0.9	1.54	6.72	17.86	78.22	N/A	1.79	7.82
RD-1 through RD-6	Fugitive	WS	Paved & Wet Spray	NA	COAL - Existing Dump, PM	9,531	8,760	8,760	5.18	lb/VMT	AP-42, Section 13.2.2, Equation 1b	0.9	0.48	2.12	5.63	24.67	N/A	0.56	2.47
RD-1 through RD-6	Fugitive	WS	Paved & Wet Spray	NA	COAL - Existing Dump, PM10	9,531	8,760	8,760	1.01	lb/VMT	AP-42, Section 13.2.2, Equation 1b	0.9	0.09	0.41	1.10	4.81	N/A	0.11	0.48
RD-1 through RD-6	Fugitive	WS	Paved & Wet Spray	NA	FLY ASH, PM	38,153	8,760	8,760	26.91	lb/VMT	AP-42, Section 13.2.2, Equation 1b	0.9	10.07	44.12	117.19	513.28	N/A	11.72	51.33
RD-1 through RD-6	Fugitive	WS	Paved & Wet Spray	NA	FLY ASH, PM10	38,153	8,760	8,760	5.25	lb/VMT	AP-42, Section 13.2.2, Equation 1b	0.9	1.97	8.61	22.86	100.14	N/A	2.29	10.01
RD-1 through RD-6	Fugitive	WS	Paved & Wet Spray	NA	BOTTOM ASH - unprocessed to landfill, PM	8,945	8,760	8,760	20.47	lb/VMT	AP-42, Section 13.2.2, Equation 1b	0.9	1.80	7.87	20.90	91.54	N/A	2.09	9.15
RD-1 through RD-6	Fugitive	WS	Paved & Wet Spray	NA	BOTTOM ASH - unprocessed to landfill, PM10	8,945	8,760	8,760	3.99	lb/VMT	AP-42, Section 13.2.2, Equation 1b	0.9	0.35	1.54	4.08	17.86	N/A	0.41	1.79
RD-1 through RD-6	Fugitive	WS	Paved & Wet Spray	NA	BOTTOM ASH - unprocessed for sale, PM	4,769	8,760	8,760	20.47	lb/VMT	AP-42, Section 13.2.2, Equation 1b	0.9	0.96	4.19	11.14	48.81	N/A	1.11	4.88
RD-1 through RD-6	Fugitive	WS	Paved & Wet Spray	NA	BOTTOM ASH - unprocessed for sale, PM10	4,769	8,760	8,760	3.99	lb/VMT	AP-42, Section 13.2.2, Equation 1b	0.9	0.19	0.82	2.17	9.52	N/A	0.22	0.95
RD-1 through RD-6	Fugitive	WS	Paved & Wet Spray	NA	BOTTOM ASH - processed for sale, PM	49	8,760	8,760	20.47	lb/VMT	AP-42, Section 13.2.2, Equation 1b	0.9	0.01	0.04	0.11	0.50	N/A	0.01	0.05
RD-1 through RD-6	Fugitive	WS	Paved & Wet Spray	NA	BOTTOM ASH - processed for sale, PM10	49	8,760	8,760	3.99	lb/VMT	AP-42, Section 13.2.2, Equation 1b	0.9	0.00	0.01	0.02	0.10	N/A	0.00	0.01
RD-1 through RD-6	Fugitive	WS	Paved & Wet Spray	NA	PYRITES, PM	771	8,760	8,760	35.12	lb/VMT	AP-42, Section 13.2.2, Equation 1b	0.9	0.27	1.16	3.09	13.55	N/A	0.31	1.35
RD-1 through RD-6	Fugitive	WS	Paved & Wet Spray	NA	PYRITES, PM10	771	8,760	8,760	6.85	lb/VMT	AP-42, Section 13.2.2, Equation 1b	0.9	0.05	0.23	0.60	2.64	N/A	0.06	0.26
RD-1 through RD-6	Fugitive	WS	Paved & Wet Spray	NA	LIMESTONE, PM	21,983	8,760	8,760	6.52	lb/VMT	AP-42, Section 13.2.2, Equation 1b	0.9	1.41	6.16	16.37	71.72	N/A	1.64	7.17
RD-1 through RD-6	Fugitive	WS	Paved & Wet Spray	NA	LIMESTONE, PM10	21,983	8,760	8,760	1.27	lb/VMT	AP-42, Section 13.2.2, Equation 1b	0.9	0.27	1.20	3.19	13.99	N/A	0.32	1.40

Mount Storm Power Station
Emission Calculations for: Fugitive-PavedRoads

Emission Unit ID	Emission Point ID	Pollution Contro Devicel ID	Pollution Control Device Description	Source ID #	Source Description	Maximum VMT (VMT/yr)	Typical Eq. Full Load Hours	Max. Hours	Emission Factor	Emission Factor Units	Emission Factor Source	Control Efficiency	Actual Emissions (lb/hr)	Actual Emissions (TPY)	Maximum Uncontrolled (lb/hr)	Maximum Uncontrolled (TPY)	Permit Limit (lb/hr)	Potential Emissions (lb/hr)	Potential Emissions (TPY)
RD-1 through RD-6	Fugitive	WS	Paved & Wet Spray	NA	FGD BY-PRODUCT, PM	55,146	8,760	8,760	5.50	lb/VMT	AP-42, Section 13.2.2, Equation 1b	0.9	2.98	13.05	34.65	151.78	N/A	3.47	15.18
RD-1 through RD-6	Fugitive	WS	Paved & Wet Spray	NA	FGD BY-PRODUCT, PM10	55,146	8,760	8,760	1.07	lb/VMT	AP-42, Section 13.2.2, Equation 1b	0.9	0.58	2.54	6.76	29.61	N/A	0.68	2.96

PM Emissions	25.84	113.19	300.66	1316.88	-	30.07	131.69
PM10 Emissions	5.04	22.08	58.65	256.90	-	5.87	25.69

NOTES:

Input data used in the emission calculations is provided below:

Description	Value	Units	Comment
Surface Silt Loading	9.7	g/m^3	Value from 2008 Annual Emissions Spreadsheet
Mettiki Coal Truck Wieght	26.00	tons	Value from 2008 Annual Emissions Spreadsheet
Existing Coal Dump Truck Wieght	24.00	tons	Value from 2008 Annual Emissions Spreadsheet
Fly Ash Truck Wieght	72	tons	Value from 2008 Annual Emissions Spreadsheet
Bottom Ash Truck Wieght	60	tons	Value from 2008 Annual Emissions Spreadsheet
PyriteTruck Wieght	86.00	tons	Value from 2008 Annual Emissions Spreadsheet
Limestone Truck Wieght	28.00	tons	Value from 2008 Annual Emissions Spreadsheet
FGD By-Product Truck Wieght	25.00	tons	Value from 2008 Annual Emissions Spreadsheet
Mettiki Dump and Fuel Blending Distance	118,079	VMT/yr	Value from 2008 Annual Emissions Spreadsheet
Existing Dump Distance	8,192	VMT/yr	Value from 2008 Annual Emissions Spreadsheet
Fly Ash Distance	32,793	VMT/yr	Value from 2008 Annual Emissions Spreadsheet
Bottom Ash unprocessed to Landfill Distance	7688	VMT/yr	Value from 2008 Annual Emissions Spreadsheet
Bottom Ash processed for sale Distance	4099	VMT/yr	Value from 2008 Annual Emissions Spreadsheet
Bottom Ash unprocessed for sale Distance	42	VMT/yr	Value from 2008 Annual Emissions Spreadsheet
Pyrites Distance	663	VMT/yr	Value from 2008 Annual Emissions Spreadsheet
Limestone Distance	18895	VMT/yr	Value from 2008 Annual Emissions Spreadsheet
FGD By-product Distance	47399	VMT/yr	Value from 2008 Annual Emissions Spreadsheet

Mount Storm Power Station
Emission Calculations for: Fugitive-UnpavedRoads

Emission Unit ID	Emission Point ID	Pollution Contro Devicel ID	Pollution Control Device Description	Source ID #	Source Description	Maximum VMT (VMT/yr)	Typical Eq. Full Load Hours	Max. Hours	Emission Factor	Emission Factor Units	Emission Factor Source	Control Efficiency	Actual Emissions (lb/hr)	Actual Emissions (TPY)	Maximum Uncontrolled (lb/hr)	Maximum Uncontrolled (TPY)	Permit Limit (lb/hr)	Potential Emissions (lb/hr)	Potential Emissions (TPY)
RD-7 through RD-11	Fugitive	WS	Paved & Wet Spray	NA	FLY ASH, PM	16,235	8,760	8,760	8.52	lb/VMT	AP-42, Section 13.2.2, Equation 1b	0.763	3.22	14.09	15.80	69.19	N/A	3.74	16.40
RD-7 through RD-11	Fugitive	WS	Paved & Wet Spray	NA	FLY ASH, PM10	16,235	8,760	8,760	2.43	lb/VMT	AP-42, Section 13.2.2, Equation 1b	0.763	0.92	4.02	4.50	19.72	N/A	1.07	4.67
RD-7 through RD-11	Fugitive	WS	Paved & Wet Spray	NA	BOTTOM ASH - unprocessed to landfill, PM	3,806	8,760	8,760	7.85	lb/VMT	AP-42, Section 13.2.2, Equation 1b	0.763	0.69	3.04	3.41	14.94	N/A	0.81	3.54
RD-7 through RD-11	Fugitive	WS	Paved & Wet Spray	NA	BOTTOM ASH - unprocessed to landfill, PM10	3,806	8,760	8,760	2.24	lb/VMT	AP-42, Section 13.2.2, Equation 1b	0.763	0.20	0.87	0.97	4.26	N/A	0.23	1.01
RD-7 through RD-11	Fugitive	WS	Paved & Wet Spray	NA	BOTTOM ASH - processed for sale, PM	169	8,760	8,760	7.85	lb/VMT	AP-42, Section 13.2.2, Equation 1b	0.763	0.03	0.13	0.15	0.66	N/A	0.04	0.16
RD-7 through RD-11	Fugitive	WS	Paved & Wet Spray	NA	BOTTOM ASH - processed for sale, PM10	169	8,760	8,760	2.24	lb/VMT	AP-42, Section 13.2.2, Equation 1b	0.763	0.01	0.04	0.04	0.19	N/A	0.01	0.04
RD-7 through RD-11	Fugitive	WS	Paved & Wet Spray	NA	PYRITES, PM	313	8,760	8,760	9.23	lb/VMT	AP-42, Section 13.2.2, Equation 1b	0.763	0.07	0.29	0.33	1.44	N/A	0.08	0.34
RD-7 through RD-11	Fugitive	WS	Paved & Wet Spray	NA	PYRITES, PM10	313	8,760	8,760	2.63	lb/VMT	AP-42, Section 13.2.2, Equation 1b	0.763	0.02	0.08	0.09	0.41	N/A	0.02	0.10

PM Emissions	4.01	17.57	19.69	86.23	-	4.67	20.44
PM10 Emissions	1.14	5.01	5.61	24.58	-	1.33	5.83

NOTES:

Input data used in the emission calculations is provided below:

Description	Value	Units	Comment
Silt Content	8.4	%	Value from 2008 Annual Emissions Spreadsheet
Days with Precipitation >0.1 inch	170	days	Value from 2008 Annual Emissions Spreadsheet
Surface Silt Loading	9.7	g/m^3	Value from 2008 Annual Emissions Spreadsheet
Fly Ash Truck Wieght	72	tons	Value from 2008 Annual Emissions Spreadsheet
Bottom Ash Truck Wieght	60	tons	Value from 2008 Annual Emissions Spreadsheet
PyriteTruck Wieght	86.00	tons	Value from 2008 Annual Emissions Spreadsheet
Fly Ash Distance	13,954	VMT/yr	Value from 2008 Annual Emissions Spreadsheet
Bottom Ash unprocessed to Landfill Distance	3271	VMT/yr	Value from 2008 Annual Emissions Spreadsheet
Bottom Ash processed for sale Distance	145	VMT/yr	Value from 2008 Annual Emissions Spreadsheet
Pyrites Distance	269	VMT/yr	Value from 2008 Annual Emissions Spreadsheet

Mount Storm Power Station
Emission Calculations for: Fugitive-AshUnloading

Emission Unit ID	Emission Point ID	Pollution Contro Devicel ID	Pollution Control Device Description	Source ID #	Source Description	Full Load Throughput (tph)	Typical Eq. Full Load Hours	Max. Hours	Emission Factor	Emission Factor Units	Emission Factor Source	Control Efficiency	Actual Emissions (lb/hr)	Actual Emissions (TPY)	Maximum Uncontrolled (lb/hr)	Maximum Uncontrolled (TPY)	Permit Limit (TPY)	Potential Emissions (lb/hr)	Potential Emissions (TPY)
AD-1	Fugitive	N/A	Moisture Content	N/A	Unloading of Ash Haul Trucks at Landfill, PM	300	2,678	8760	1.74E-04	lb/ton	AP-42, Section 13.2.4, Equation 1	0.99	1.30E-04	1.74E-04	0.05	0.23	N/A	5.21E-04	2.28E-03
AD-1	Fugitive	N/A	Moisture Content	N/A	Unloading of Ash Haul Trucks at Landfill, PM10	300	2,678	8760	8.21E-05	lb/ton	AP-42, Section 13.2.4, Equation 1	0.99	6.16E-05	8.25E-05	0.02	0.11	N/A	2.46E-04	1.08E-03

PM Emissions	1.30E-04	1.74E-04	5.21E-02	2.28E-01	-	5.21E-04	2.28E-03
PM10 Emissions	6.16E-05	8.25E-05	2.46E-02	1.08E-01	-	2.46E-04	1.08E-03

NOTES:
Input data used in the emission calculations is provided below:

Description	Value	Units	Comment
Percent H2O Ash	20.00	%	Value from 2008 Annual Emissions Spreadsheet
Mean Wind Speed	8.0	mph	Value from 2008 Annual Emissions Spreadsheet
Actual FGD By-Product Throughput Rate	803,399	TPY	Value from 2008 Annual Emissions Spreadsheet

Mount Storm Power Station
Emission Calculations for: Fugitive-FGDByProductUnloading

Emission Unit ID	Emission Point ID	Pollution Contro Devicel ID	Pollution Control Device Description	Source ID #	Source Description	Full Load Throughput (tph)	Typical Eq. Full Load Hours	Max. Hours	Emission Factor	Emission Factor Units	Emission Factor Source	Control Efficiency	Actual Emissions (lb/hr)	Actual Emissions (TPY)	Maximum Uncontrolled (lb/hr)	Maximum Uncontrolled (TPY)	Permit Limit (TPY)	Potential Emissions (lb/hr)	Potential Emissions (TPY)
FGD-1	Fugitive	N/A	Moisture Content	N/A	Unloading of FGD By-Product Haul Trucks at Landfill, PM	27	4,693	8760	1.74E-04	lb/ton	AP-42, Section 13.2.4, Equation 1	0.99	4.69E-05	1.10E-04	0.00	0.02	N/A	4.69E-05	2.05E-04
FGD-1	Fugitive	N/A	Moisture Content	N/A	Unloading of FGD By-Product Haul Trucks at Landfill, PM10	27	4,693	8760	8.21E-05	lb/ton	AP-42, Section 13.2.4, Equation 1	0.99	2.22E-05	5.20E-05	0.00	0.01	N/A	2.22E-05	9.71E-05

PM Emissions	4.69E-05	1.10E-04	4.69E-03	2.05E-02	-	4.69E-05	2.05E-04
PM10 Emissions	2.22E-05	5.20E-05	2.22E-03	9.71E-03	-	2.22E-05	9.71E-05

NOTES:
Input data used in the emission calculations is provided below:

Description	Value	Units	Comment
Percent H2O Ash	20.00	%	Value from 2008 Annual Emissions Spreadsheet
Mean Wind Speed	8.0	mph	Value from 2008 Annual Emissions Spreadsheet
Actual FGD By-Product Throughput Rate	506,864	TPY	Value from 2008 Annual Emissions Spreadsheet

TITLE V PERMIT RENEWAL APPLICATION
Mt. Storm Power Station
R30-02300003-2005

Binder 3 of 3:

Process Flow Diagrams.....Attachment C

- Boiler Air System – Unit 1
- Boiler Air System – Unit 1
- Boiler Air System – Unit 2
- Boiler Air System – Unit 2
- Boiler Air System – Unit 3
- Cooling Tower Unit 1 Component Cooling System
- Cooling Tower Unit 2 Component Cooling System
- Cooling Tower Unit 3 Component Cooling System
- Ash Handling Unit 1
- Ash Handling Unit 2
- Ash Handling Unit 3
- Station Auxiliary Boiler System
- FGD System – general arrangement
- Coal Handling
- Limestone Handling
- Sample System
- Pyrites
- Fire Protection – Main & Auxiliary Fire Pump house System
- Ammonia Tanks
- Acid Tank
- No. 2 Fuel oil Tanks
- Lime Storage Tank
- Miscellaneous Tanks
- Plant Roads

ATTACHMENT C
PROCESS FLOW DIAGRAMS

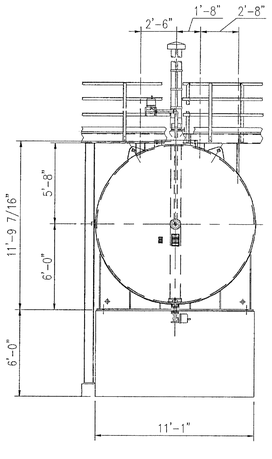

ELEVATION VIEW

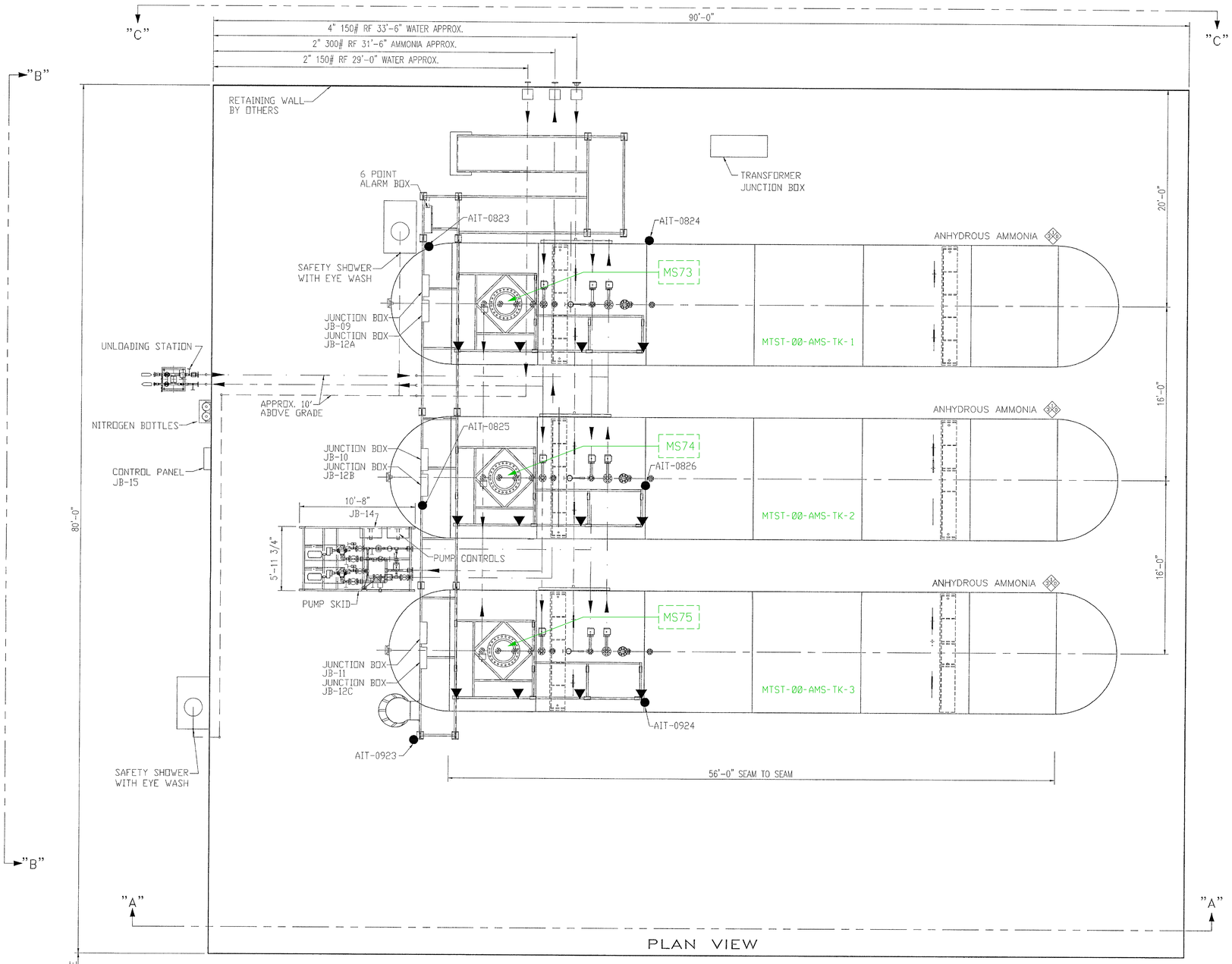

CONTROLLED DRAWING

ANY CHANGES MADE TO THIS SYSTEM SHALL BE DOCUMENTED AS NOTED IN FOSSIL AND HYDRO CONTROLS MANUAL SECTION 6.3 .

Dominion

FOSSIL & HYDRO ENGINEERING
RICHMOND, VIRGINIA

2010 TITLE V RENEWAL APPLICATION
AMMONIA TANKS
MOUNT STORM POWER STATION

DSGN		DSGN SUPV	RWM
DRWN	TMD	ENGR SUPV	
CHKD	EAW	LEAD ENGR	
DISPL ENGR		SCALE	NONE

DATE $$$$$$$ DGNSPEC FOR FILE VERIFICATION
DRAWING NO. MS-0-SP-STA-701 REV. 0
UNLESS OTHERWISE NOTED SH OF

REV	DATE	DESCRIPTION
0	01-15-10	ISSUE PER ENVIRONMENTAL ENGINEERING

USERNAME$$$$

\UNIT0\ENVIROMT\SPSTA701.HYB 1/20/2010 8:57:22 AM

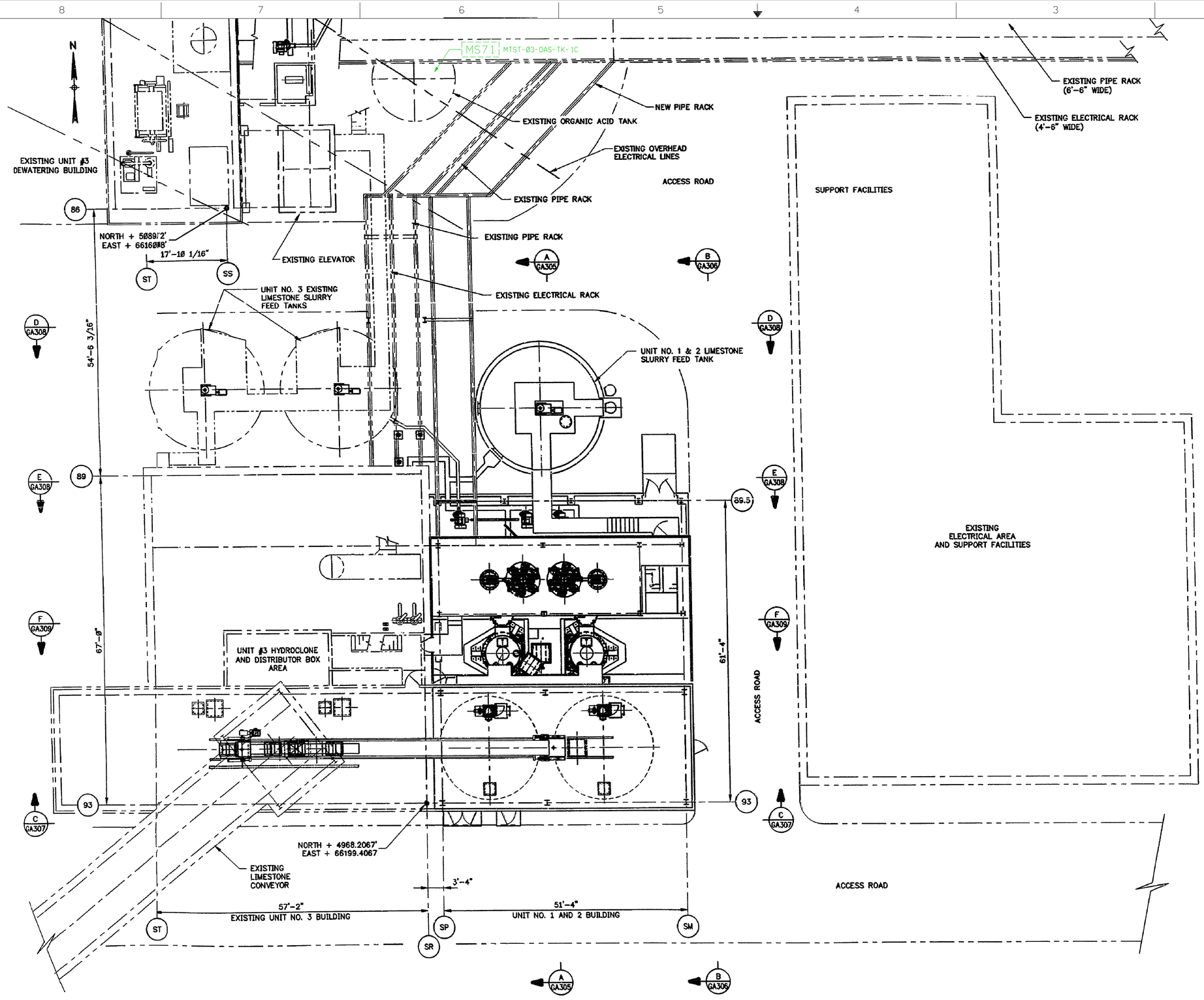

CONTROLLED DRAWING

ANY CHANGES MADE TO THIS SYSTEM SHALL BE DOCUMENTED AS NOTED IN FOSSIL AND HYDRO CONTROLS MANUAL SECTION 6.3 .

REV	DATE	DSGN	DRWN	CHKD	DSGN SUPV	LEAD ENGR	CIVIL ENGR	ELEC ENGR	MECH ENGR	ARCH	E.M. ENGR	I&C ENGR
Ø	01-15-10			EAW								

ISSUE PER ENVIRONMENTAL ENGINEERING.

Dominion

FOSSIL & HYDRO ENGINEERING
RICHMOND, VIRGINIA

2010 TITLE V RENEWAL APPLICATION
ACID TANK
MOUNT STORM POWER STATION

DSGN		DSGN SUPV	RWM
DRWN	TMD	ENGR SUPV	
CHKD	EAW	LEAD ENGR	
DISPL ENGR		SCALE	NONE

DATE $$$$$$$ DGNSPEC FOR FILE VERIFICATION
DRAWING NO. MS-Ø-SP-STA-703 REV. Ø
UNLESS OTHERWISE NOTED SH OF

USERNAME$$$$

\UNIT0\ENVIROMT\SPSTA703.HYB 1/20/2010 9:46:43 AM

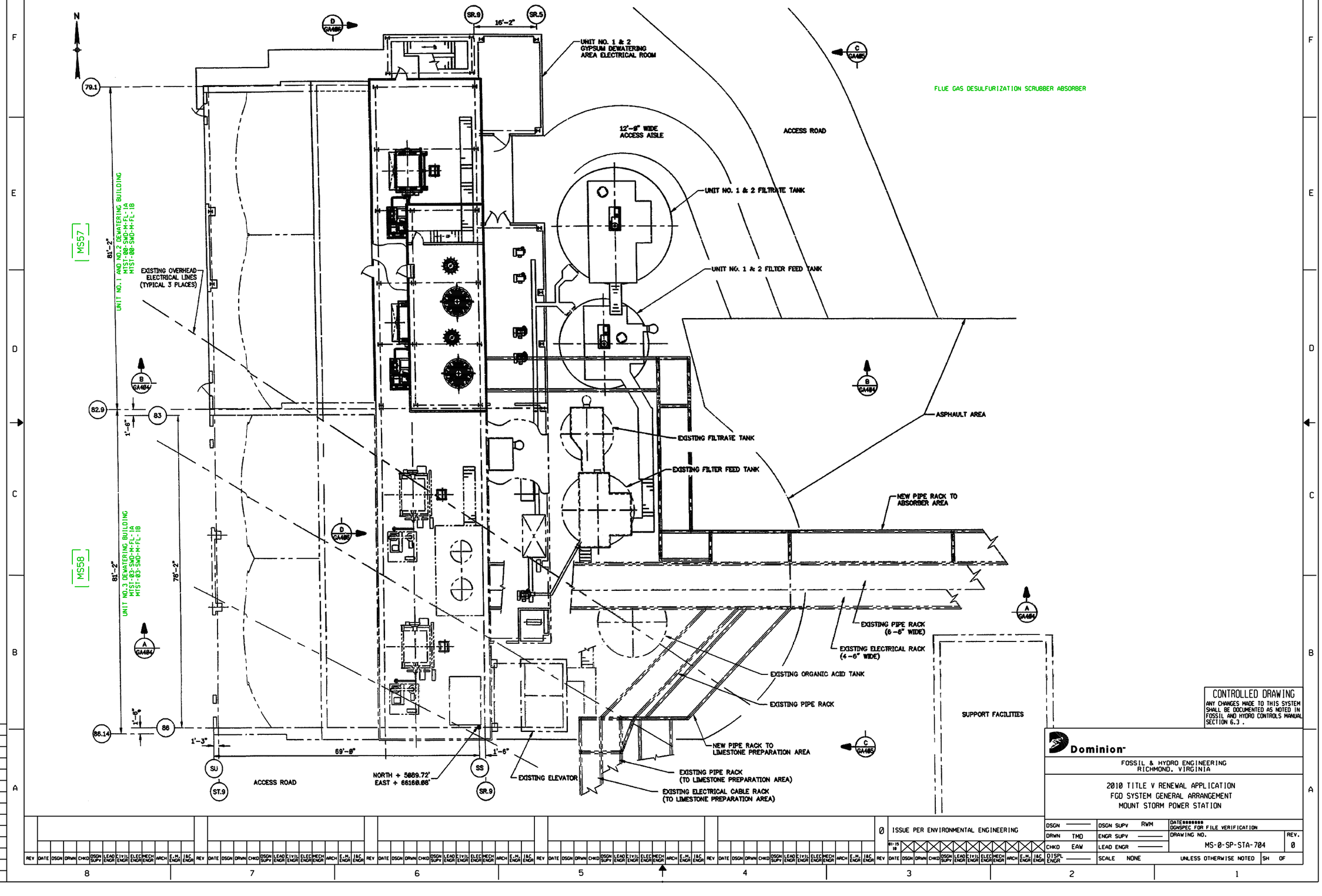

CONTROLLED DRAWING
ANY CHANGES MADE TO THIS SYSTEM SHALL BE DOCUMENTED AS NOTED IN FOSSIL AND HYDRO CONTROLS MANUAL SECTION 6.3 .

Dominion

FOSSIL & HYDRO ENGINEERING
RICHMOND, VIRGINIA

2010 TITLE V RENEWAL APPLICATION
FGD SYSTEM GENERAL ARRANGEMENT
MOUNT STORM POWER STATION

REV	DATE	DESCRIPTION
0	01-15-10	ISSUE PER ENVIRONMENTAL ENGINEERING

DSGN — DSGN SUPV RWM — DATE******** DGNSPEC FOR FILE VERIFICATION
DRWN TMD — ENGR SUPV — DRAWING NO. MS-0-SP-STA-704 — REV. 0
CHKD EAW — LEAD ENGR
DISPL ENGR — SCALE NONE — UNLESS OTHERWISE NOTED — SH OF

USERNAME****

...\UNIT0\ENVIROMT\SPSTA704.HYB 1/20/2010 9:49:44 AM

LEGEND

- CATCH BASIN
- APPROXIMATE LOCATION OF OIL FILLED TRANSFORMER
- RAILROAD
- ABOVEGROUND FUEL OIL PIPING
- STORM WATER DRAINAGE PIPE
- STORM WATER DRAINAGE DITCH

FACILITY SITE PLAN

APPROXIMATELY 1"=175'

CONTROLLED DRAWING
ANY CHANGES MADE TO THIS SYSTEM SHALL BE DOCUMENTED AS NOTED IN FOSSIL AND HYDRO CONTROLS MANUAL SECTION 6.3.

REV	DATE	DSGN	DRWN	CHKD	DSGN SUPV	PROJ ENGR	CIVIL ENGR	ELEC ENGR	MECH ENGR	ARCH	E.M. ENGR	I&C ENGR
0	01-15-2010	TMD	EAW	RWM								

0 ORIGINAL ISSUE PER ENVIRONMENTAL ENGINEERING

DRAWN BY:
DATE:
CHECKED BY:
SET PROJECT NO.
SET FILE NAME
DRAWING SCALE AS SHOWN

TECHNOLOGIES
98 Vanadium Road Bridgeville, PA 15017 (412) 221-1100

DOMINION GENERATION

2010 TITLE RENEWAL APPLICATION
MISC TANKS
MOUNT STORM POWER STATION

DRAWING NO. MS-0-SP-STA-705

REV. 0

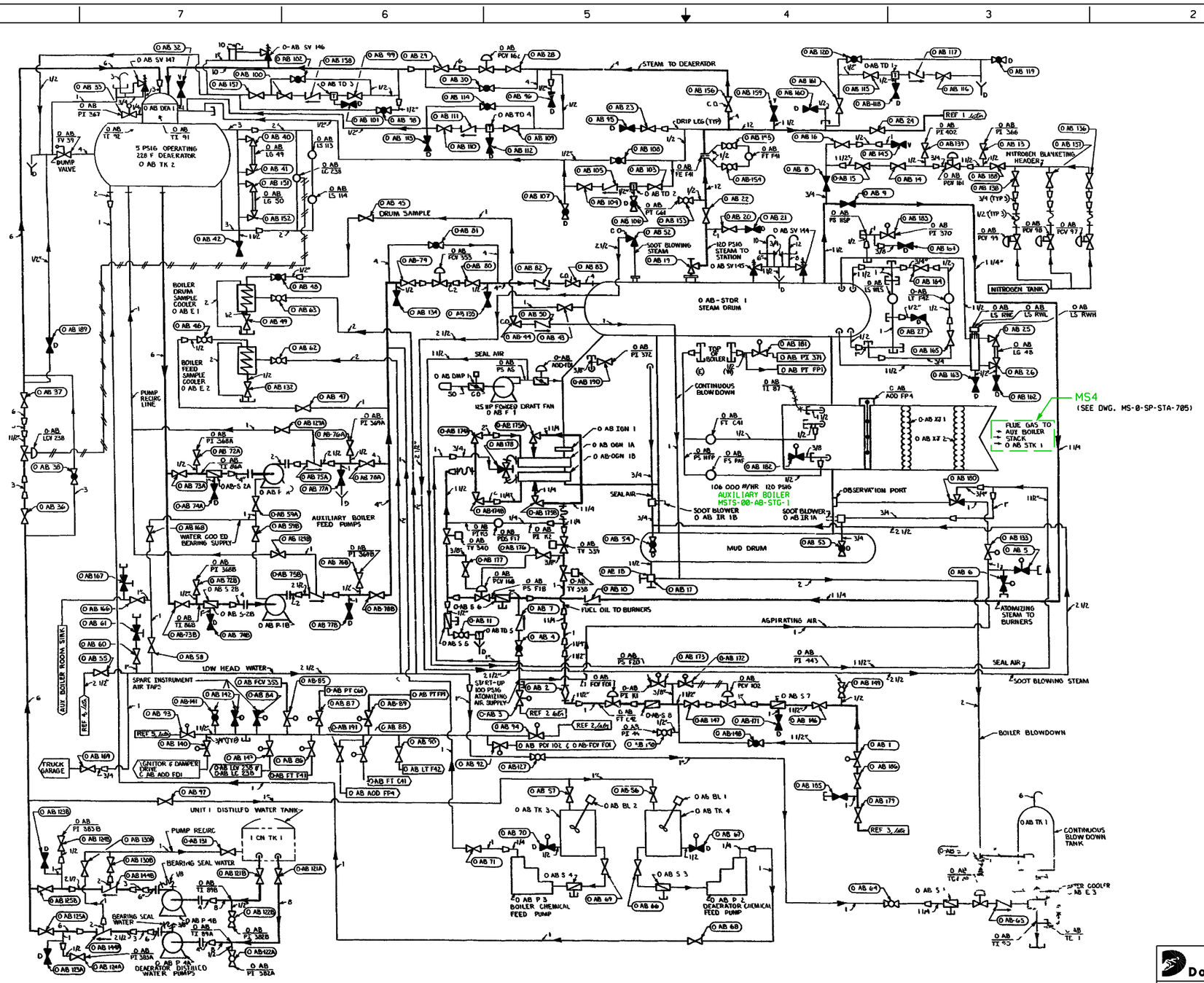

CONTROLLED DRAWING
ANY CHANGES MADE TO THIS SYSTEM SHALL BE DOCUMENTED AS NOTED IN FOSSIL AND HYDRO CONTROLS MANUAL SECTION 6.3 .

Dominion

FOSSIL & HYDRO ENGINEERING
RICHMOND, VIRGINIA

2010 TITLE V RENEWAL APPLICATION
STATION AUXILIARY BOILER SYSTEM
MOUNT STORM POWER STATION

REV	DATE	DESCRIPTION
0	01-19-10	ISSUE PER ENVIRONMENTAL ENGINEERING

DSGN —— DSGN SUPV RWM
DRWN TMD ENGR SUPV ——
CHKD EAW LEAD ENGR ——
DISPL ENGR —— SCALE NONE UNLESS OTHERWISE NOTED

DATE******* DGNSPEC FOR FILE VERIFICATION
DRAWING NO. MS-0-SP-STA-706 REV. 0
SH 1 OF 1

USERNAME$$$$

...\UNIT0\ENVIROMT\SPSTA706.HYB 1/20/2010 9:55:17 AM

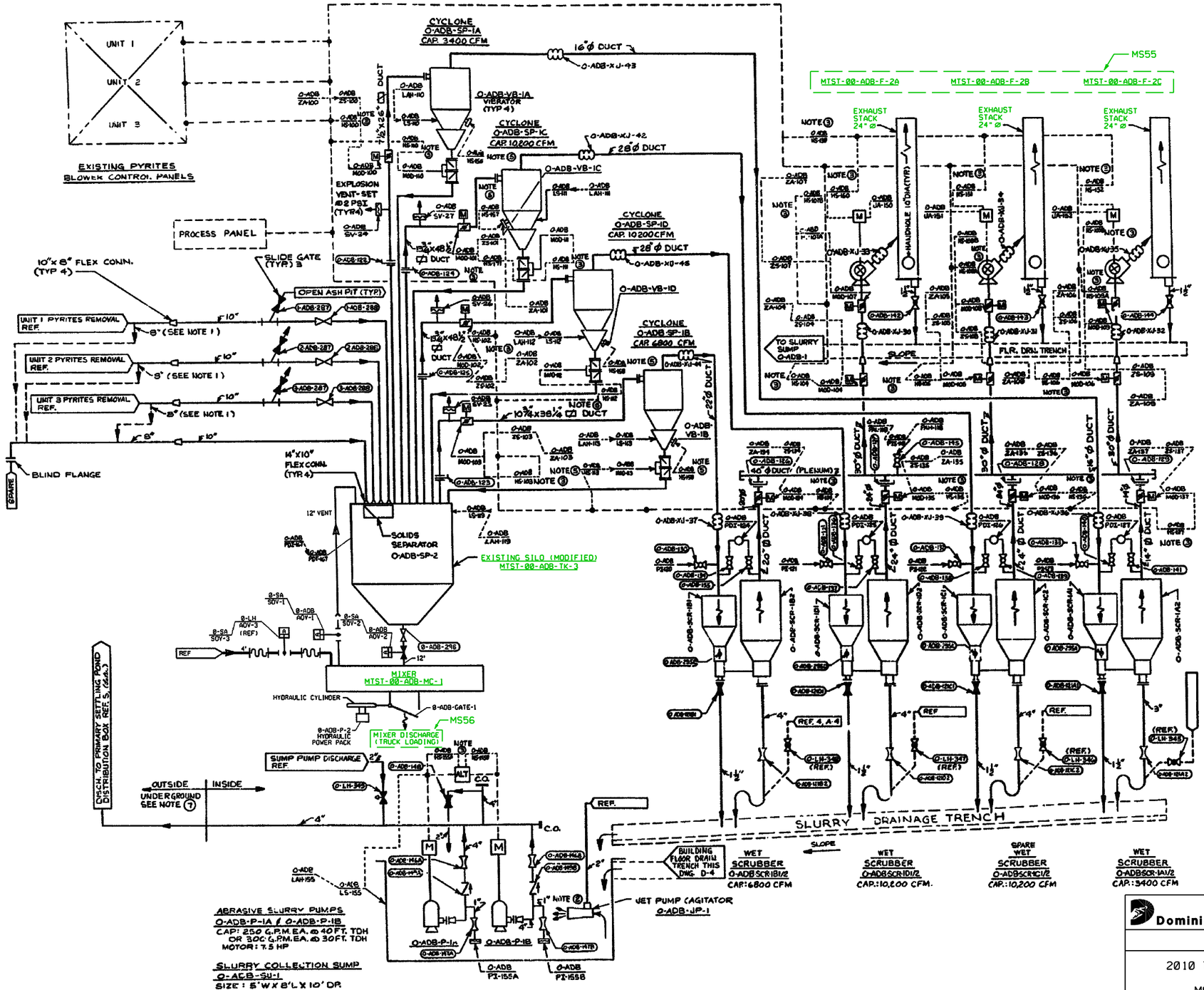

CONTROLLED DRAWING

ANY CHANGES MADE TO THIS SYSTEM SHALL BE DOCUMENTED AS NOTED IN FOSSIL AND HYDRO CONTROLS MANUAL SECTION 6.3 .

REV	DATE	DESCRIPTION
0		ISSUE PER ENVIRONMENTAL ENGINEERING.

Dominion

FOSSIL & HYDRO ENGINEERING
RICHMOND, VIRGINIA

2010 TITLE V RENEWAL APPLICATION
PYRITES
MOUNT STORM POWER STATION

DSGN		DSGN SUPV	RWM
DRWN	TMD	ENGR SUPV	
CHKD	EAW	LEAD ENGR	
DISPL ENGR		SCALE	NONE

DATE: DGNSPEC FOR FILE VERIFICATION
DRAWING NO. MS-0-SP-STA-707
REV. 0
UNLESS OTHERWISE NOTED
SH 1 OF 1

USERNAME:

...\UNIT0\ENVIROMT\SPSTA707.HYB 1/20/2010 9:57:25 AM

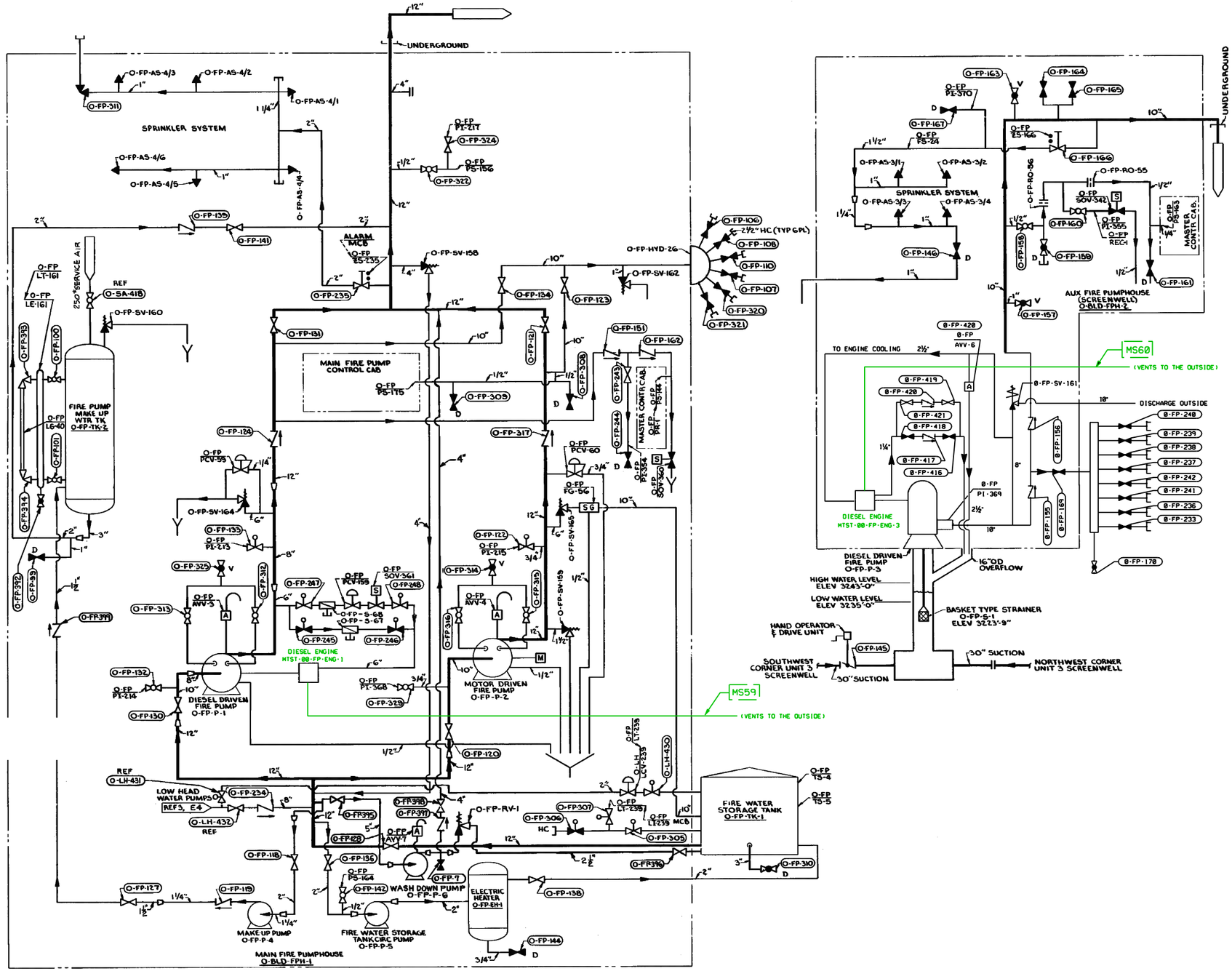

...\UNIT0\ENVIROMT\SPSTA710.HYB 1/20/2010 10:36:44 AM

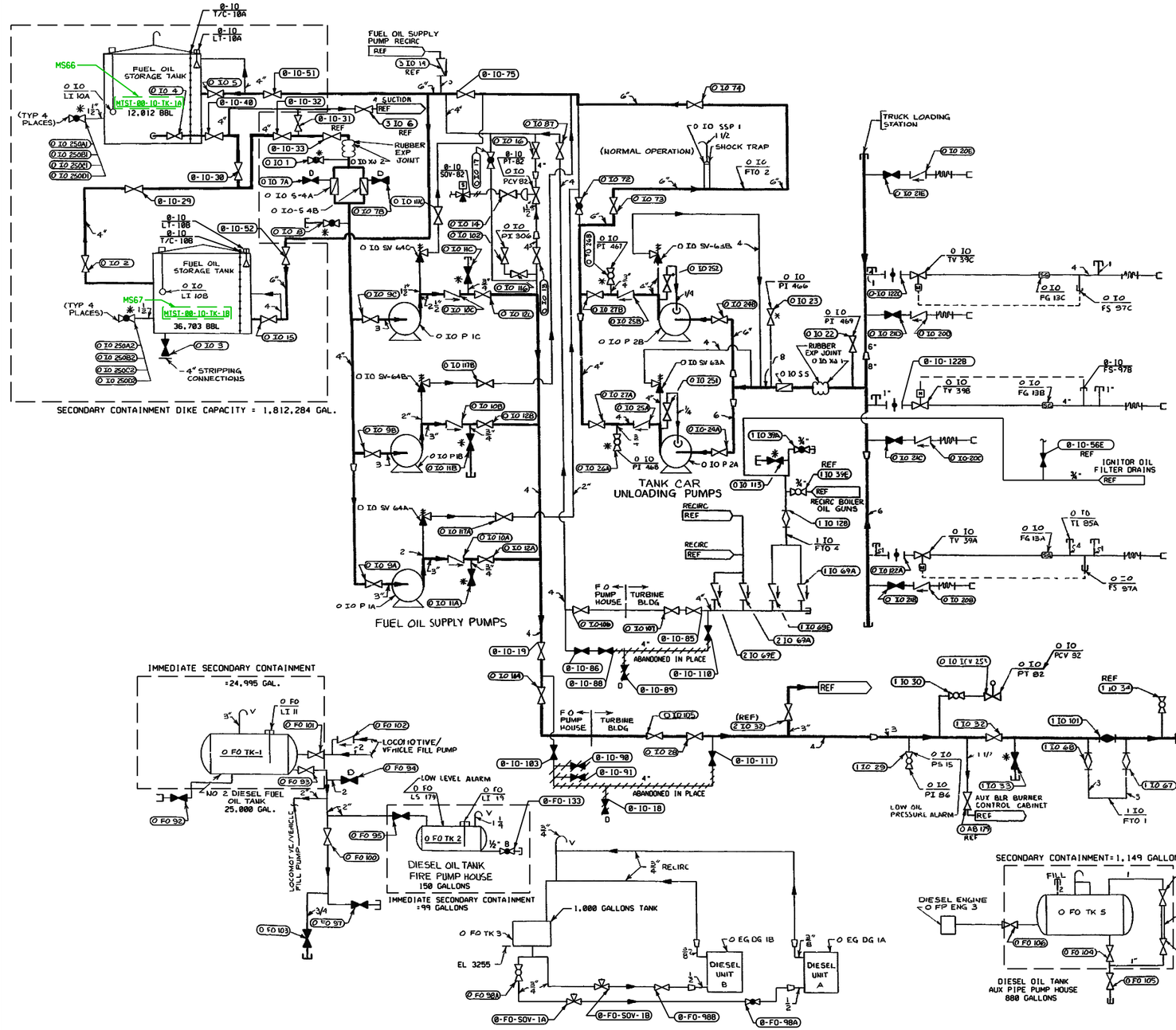

CONTROLLED DRAWING
ANY CHANGES MADE TO THIS SYSTEM SHALL BE DOCUMENTED AS NOTED IN FOSSIL AND HYDRO CONTROLS MANUAL SECTION 6.3 .

Dominion

FOSSIL & HYDRO ENGINEERING
RICHMOND, VIRGINIA

2010 TITLE V RENEWAL APPLICATION
NO. 2 FUEL OIL TANKS
MOUNT STORM POWER STATION

DSGN		DSGN SUPV	RWM
DRWN	TMD	ENGR SUPV	
CHKD	EAW	LEAD ENGR	
SCALE	NONE	DISPL ENGR	

DATE 8888888 DGNSPEC FOR FILE VERIFICATION
DRAWING NO. MS-0-SP-STA-711 REV. 0
UNLESS OTHERWISE NOTED SH 1 OF 1

REV	DESCRIPTION
0	ISSUE PER ENVIRONMENTAL ENGINEERING

USERNAME8888

...\UNIT0\ENVIROMT\SPSTA711.HYB 1/20/2010 10:39:03 AM-

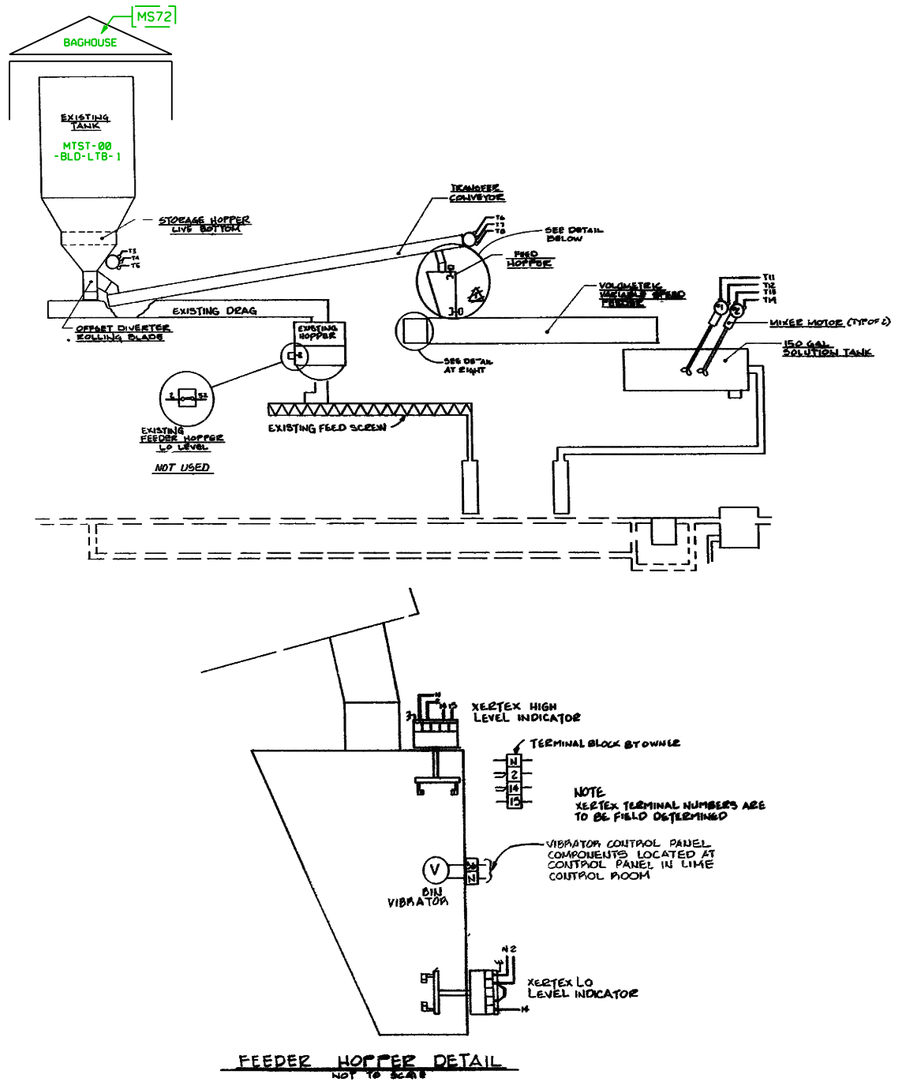

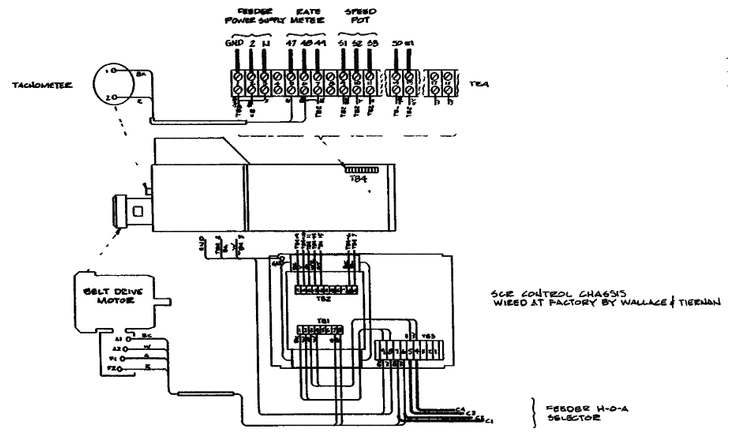

CONTROLLED DRAWING
ANY CHANGES MADE TO THIS SYSTEM SHALL BE DOCUMENTED AS NOTED IN FOSSIL AND HYDRO CONTROLS MANUAL SECTION 6.3 .

Dominion

FOSSIL & HYDRO ENGINEERING
RICHMOND, VIRGINIA

2010 TITLE V RENEWAL APPLICATION
LIME STORAGE TANK
MOUNT STORM POWER STATION

REV	DESCRIPTION
0	ISSUE PER INVERONMENTAL ENGINEERING.

DSGN		DSGN SUPV	RWM
DRWN	TMD	ENGR SUPV	
CHKD	EAW	LEAD ENGR	
DISPL ENGR		SCALE	NONE

DATE******* DGNSPEC FOR FILE VERIFICATION
DRAWING NO. MS-0-SP-STA-712
REV. 0
UNLESS OTHERWISE NOTED
SH 1 OF 1

USERNAME=****

...\UNIT0\ENVIROMT\SPSTA712.HYB 1/20/2010 10:40:22 AM

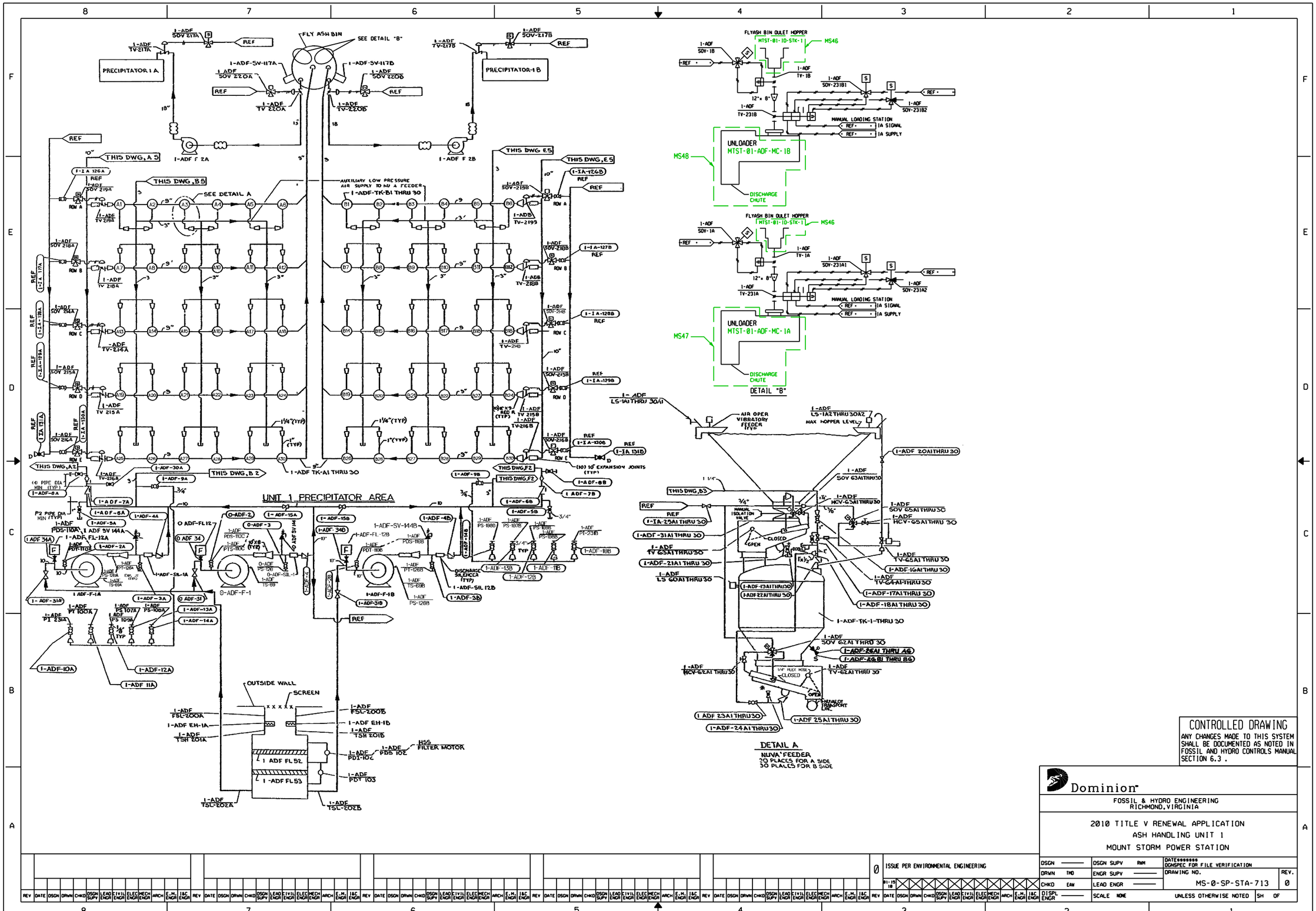

CONTROLLED DRAWING

ANY CHANGES MADE TO THIS SYSTEM SHALL BE DOCUMENTED AS NOTED IN FOSSIL AND HYDRO CONTROLS MANUAL SECTION 6.3 .

Dominion

FOSSIL & HYDRO ENGINEERING
RICHMOND, VIRGINIA

2010 TITLE V RENEWAL APPLICATION
ASH HANDLING UNIT 1
MOUNT STORM POWER STATION

DSGN	DSGN SUPV RWM	DATE DGNSPEC FOR FILE VERIFICATION	
DRWN TMD	ENGR SUPV	DRAWING NO. MS-0-SP-STA-713	REV. 0
CHKD EAW	LEAD ENGR		
DISPL ENGR	SCALE NONE	UNLESS OTHERWISE NOTED	SH OF

0 ISSUE PER ENVIRONMENTAL ENGINEERING

...\UNIT0\ENVIROMT\SPSTA713.HYB 1/20/2010 10:42:10 AM

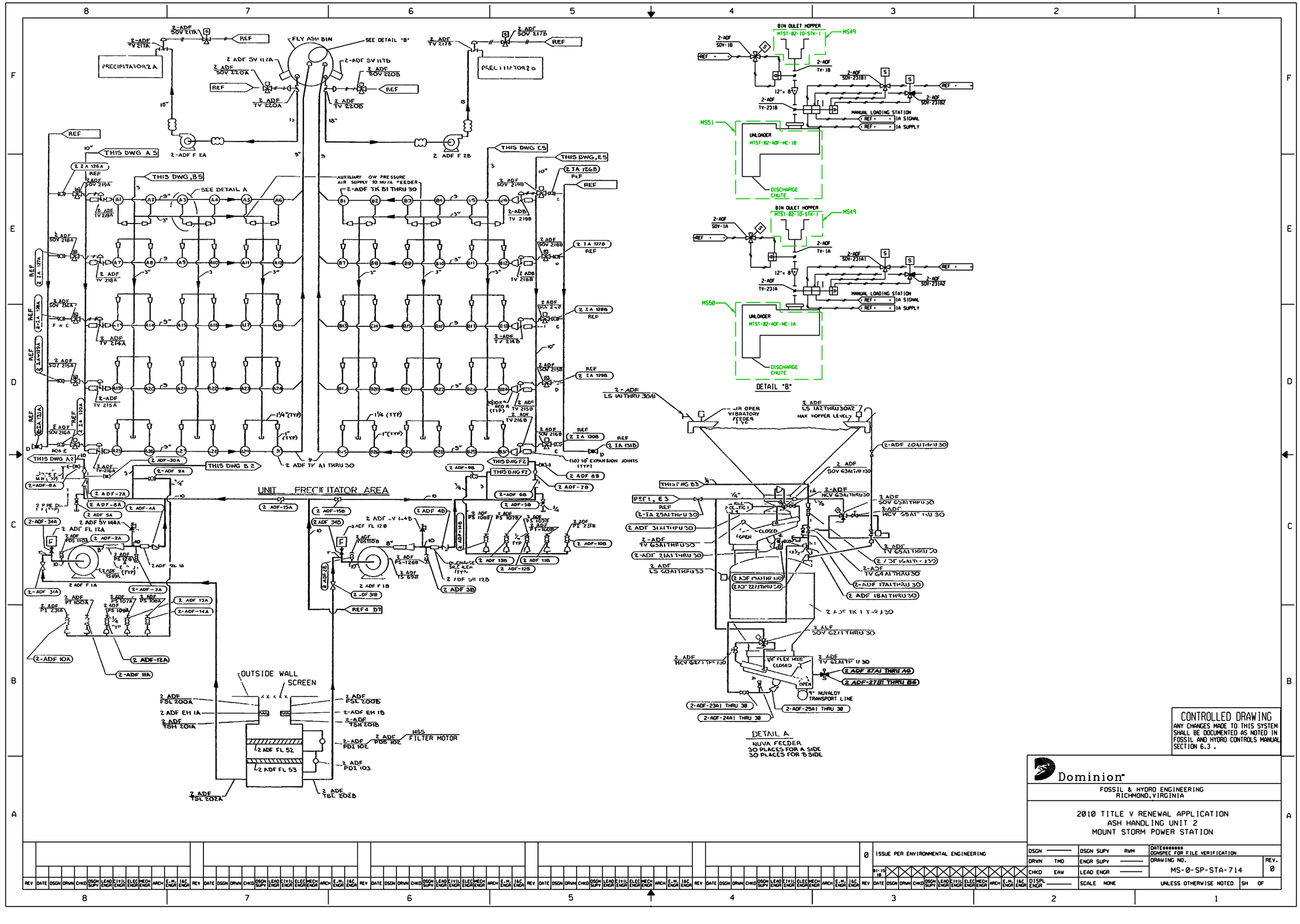

CONTROLLED DRAWING
ANY CHANGES MADE TO THIS SYSTEM SHALL BE DOCUMENTED AS NOTED IN FOSSIL AND HYDRO CONTROLS MANUAL SECTION 6.3 .

Dominion

FOSSIL & HYDRO ENGINEERING
RICHMOND, VIRGINIA

2010 TITLE V RENEWAL APPLICATION
ASH HANDLING UNIT 2
MOUNT STORM POWER STATION

REV	DESCRIPTION
0	ISSUE PER ENVIRONMENTAL ENGINEERING

DSGN		DSGN SUPV	RWM
DRWN	TMD	ENGR SUPV	
CHKD	EAW	LEAD ENGR	
DISPL ENGR		SCALE	NONE

DATE: 01-15-10 DGNSPEC FOR FILE VERIFICATION
DRAWING NO. MS-0-SP-STA-714
REV. 0
UNLESS OTHERWISE NOTED SH OF

...\UNIT0\ENVIROMT\SPSTA714.HYB 1/20/2010 11:04:56 AM

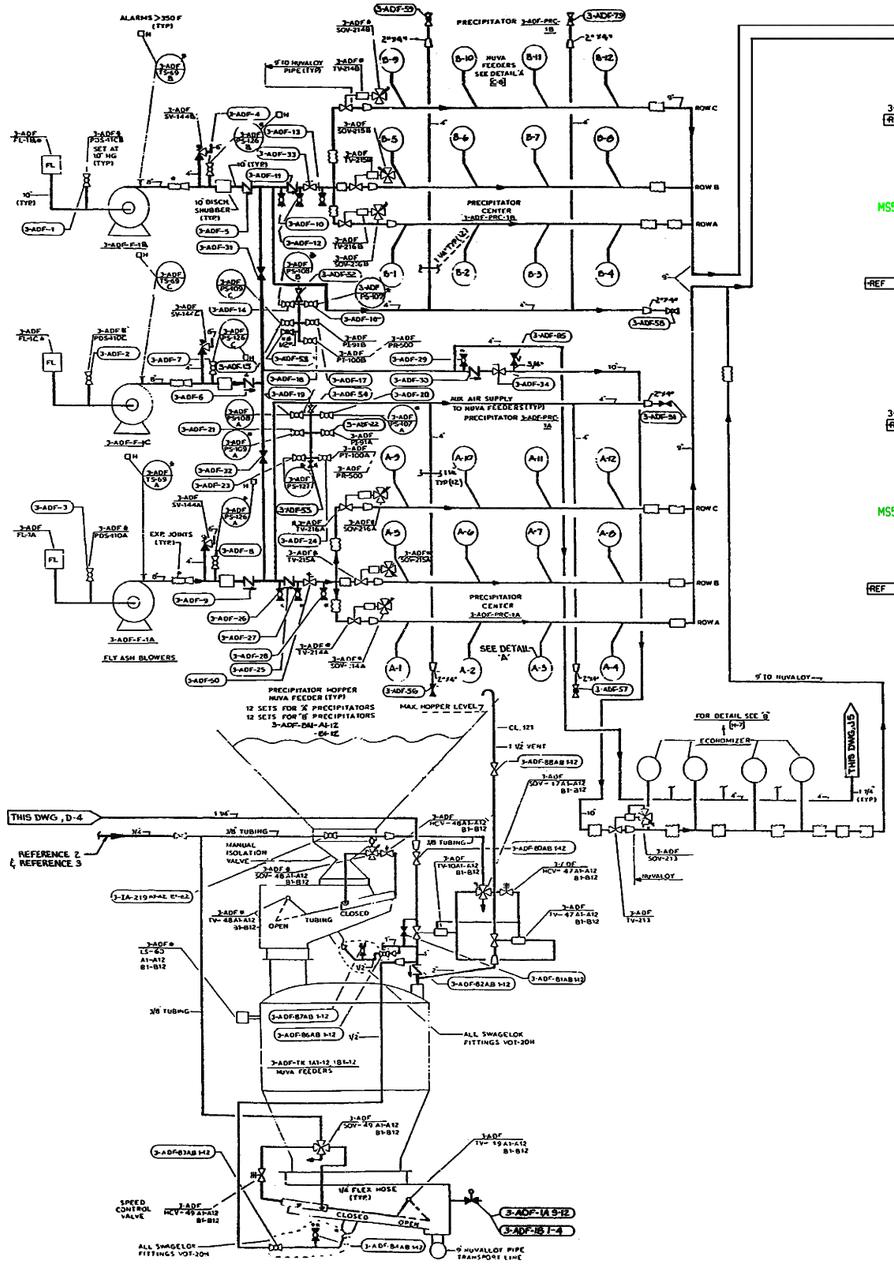

CONTROLLED DRAWING
ANY CHANGES MADE TO THIS SYSTEM SHALL BE DOCUMENTED AS NOTED IN FOSSIL AND HYDRO CONTROLS MANUAL SECTION 6.3 .

Dominion®

FOSSIL & HYDRO ENGINEERING
RICHMOND, VIRGINIA

2010 TITLE V RENEWAL APPLICATION
ASH HANDLING UNIT 3
MOUNT STORM POWER STATION

REV	DATE	DESCRIPTION
0	81-15 10	ISSUE PER ENVIRONMENTAL ENGINEERING

DSGN	——	DSGN SUPV	RWM
DRWN	TMD	ENGR SUPV	——
CHKD	EAW	LEAD ENGR	——
DISPL ENGR	——	SCALE	UNLESS OTHERWISE NOTED

DATE: DGNSPEC FOR FILE VERIFICATION
DRAWING NO. MS-0-SP-STA-715 REV. 0
SH OF

...\UNIT0\ENVIROMT\SPSTA715.HYB 1/20/2010 11:10:14 AM

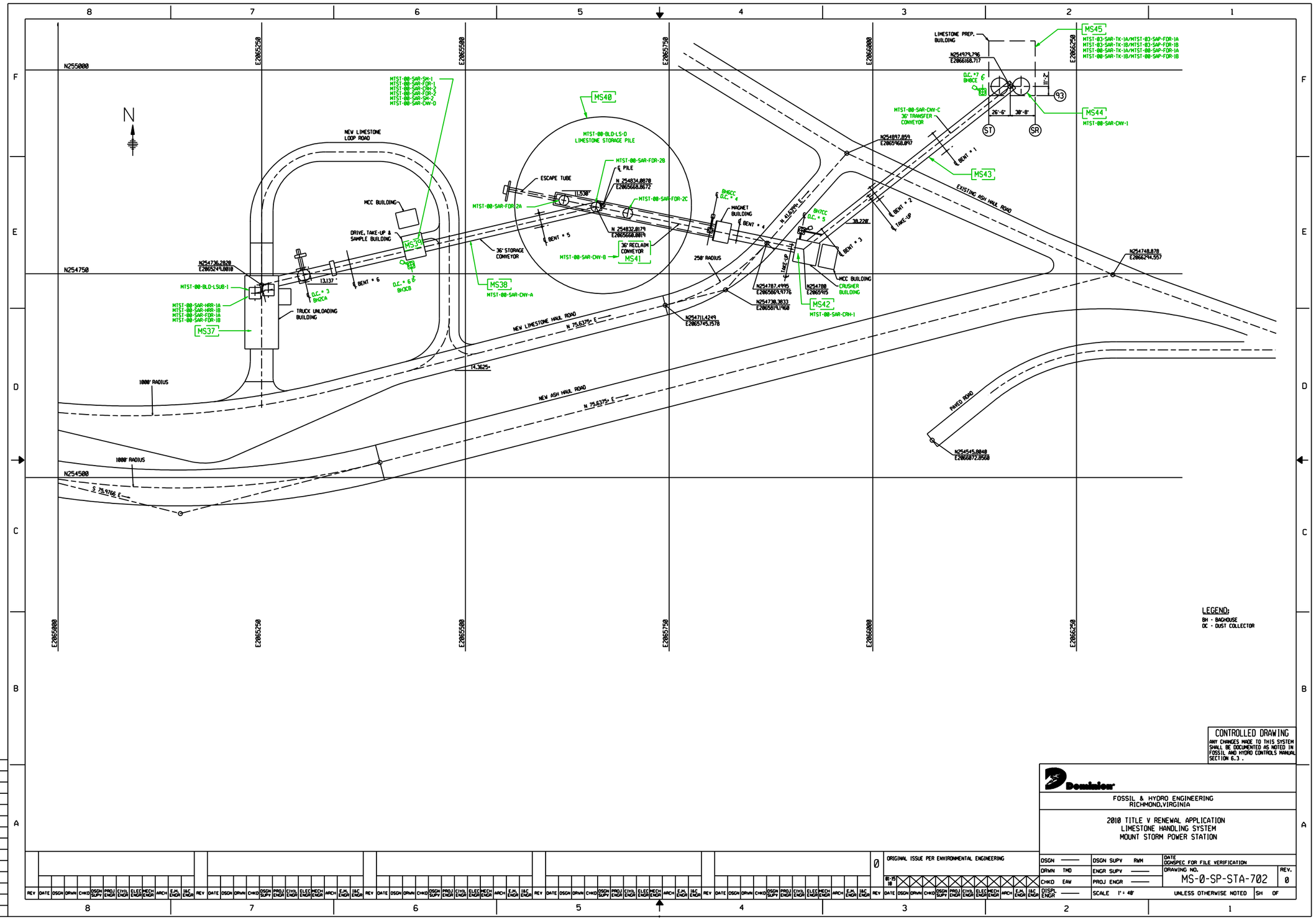

CONTROLLED DRAWING

ANY CHANGES MADE TO THIS SYSTEM SHALL BE DOCUMENTED AS NOTED IN FOSSIL AND HYDRO CONTROLS MANUAL SECTION 6.3 .

Dominion

FOSSIL & HYDRO ENGINEERING
RICHMOND,VIRGINIA

2010 TITLE V RENEWAL APPLICATION
LIMESTONE HANDLING SYSTEM
MOUNT STORM POWER STATION

REV	DATE	DESCRIPTION
0		ORIGINAL ISSUE PER ENVIRONMENTAL ENGINEERING

DSGN	——	DSGN SUPV	RWM
DRWN	TMD	ENGR SUPV	——
CHKD	EAW	PROJ ENGR	——
DISPL ENGR	——	SCALE	1" = 40'

DATE: DCNSPEC FOR FILE VERIFICATION
DRAWING NO.: MS-0-SP-STA-702
REV.: 0
UNLESS OTHERWISE NOTED
SH OF

...\UNIT0\ENVIROMT\STA702.SP 1/21/2010 12:47:44 PM

NOTE:

1. BOTH C2 & H2 CONVEYORS IN THE SAME FULL ENCLOSURE
2. MS 12 IN FULL ENCLOSURE

MS7
1200 TONS/HR
MTST-00-CS-CNV-S2
36"
HIGH LEVEL CONTROL (TYP)
COAL SILO #1 10000 TON CAP. MTST-00-CS-CYS-1
COAL SILO #2 10000 TON CAP. MTST-00-CS-CYS-2
R & P CUT OFF GATE (TYP)
VIBRATOR (TYP)
14 FEEDERS (TYP) 200 OR 400 TPH
MTST-00-CS-FOR-V06
48"
MTST-00-CS-CNV-P-1
MS8
MOTORIZED FLOP GATE
0-CS MOG-2
MTST-00-CS-CNV-R
42"
800 TONS/HR
MTST-00-CS-CNV-Q
TRANSFER HOUSE
0-CS-CHT-Q
0-CS-CHT-R
MS9
0-CS MOG-262
COAL PILE
EMERGENCY RECLAIM SYSTEM
RAILROAD CAR THAWING SHED
CAR DUMPER MTST-00-CS-UNL-1
MS13
0-CS-CHT-A1
0-CS-CHT-A2
MTST-00-CS-FOR-A2
MTST-00-CS-FOR-A1
0-CS-CHT-B
0-CS-CHT-1F
MS14
MTST-00-CS-CNV-B
MS15
MAGNETIC SEPARATOR 0-CS-SP-B
COAL SAMPLE #4 REF
0-CS AOG-260
0-CS AOG-261
MS18
MTST-00-BLD-CSD-2
0-CS-CHT-G3
0-CS-CHT-G1
VIBRATORY FEEDER MTST-00-CS-FOR-VBG3
VIBRATORY FEEDER MTST-00-CS-FOR-VBG1
VIBRATORY FEEDER MTST-00-CS-FOR-VBG4
VIBRATORY FEEDER MTST-00-CS-FOR-VBG2
0-CS-CHT-G4
0-CS-CHT-G2
0-CS-CHT-GA
0-CS-CHT-GB
0-CS-CHT-M2
0-CS-CHT-EBP
COAL SAMPLER REF
MAGNETIC SEPARATOR 0-CS-SP-G
700 TONS/HR
MTST-00-CS-CNV-G
0-CS-CHT-M3
COAL SAMPLE REF
MTST-00-CS-CRH-3 (OUT OF SERVICE)
MTST-00-CS-FOR-M3
0-CS-CHT-H2C
0-CS-CHT-E3
MTST-00-CS-FOR-M2 VIBRATING FEEDER
MTST-00-CS-CRH-2 (OUT OF SERVICE)
0-CS-CHT-C2C
MS12 (NOTE 2)
REJECTION CHUTE 0-CS-CHT-DA
MAIN CHUTE 0-CS-CHT-D
0-CS-VB-DA2
0-CS-VB-DA1
MTST-00-CS-CNV-D
CONT ON REF
MTST-00-CS-FOR-D
REJECTION CHUTE 0-CS-CHT-JA
MAIN CHUTE 0-CS-CHT-J
0-CS-VB-JA2
0-CS-VB-JA1
BELT SCALE 0-CS-W-C2
MTST-00-CS-CNV-J
CONT ON REF
MTST-00-CS-FOR-J
BELT SCALE 0-CS-W-H2
MTST-00-CS-CNV-C2
MTST-00-CS-CNV-H2
0-CS-CHT-H2A
0-CS-CHT-C2A
MS16
2100 TONS/HR
MTST-00-CS-CNV-E
0-CS-CHT-F
MS17
STOCKOUT CONVEYOR MTST-00-CS-CNV-F
COAL PILE
MS19
0-CS-CHT-H1
0-CS-CHT-H2
0-CS-CHT-H3
0-CS-CHT-C1
0-CS-CHT-C2
0-CS-CHT-C3
0-CS-CHT-C4
COAL PILE CONT ON THIS DWG (F-5)
RECLAIM HOPPERS AND VIBRATING FEEDERS
MTST-00-CS-FOR-V0C1
MTST-00-CS-FOR-V0C4
1200 TONS/HR
MTST-00-CS-CNV-C1
MTST-00-CS-FOR-V0C2
MTST-00-CS-FOR-V0C3
MTST-00-CS-FOR-V0H1
MTST-00-CS-FOR-V0H2
MTST-00-CS-FOR-V0H3
MS20
NEW CRUSHER BUILDING
0-CS SOV-259
0-CS AOG-259
MTST-00-CS-CHT-C2B
0-CS-CHT-C2B
MTST-00-CS-CRH-4
0-CS SOV-258
0-CS AOG-258
MTST-00-CS-CHT-H2B
0-CS-CHT-H2B
MTST-00-CS-CRH-5
1200 TONS/HR
MTST-00-CS-CNV-H1
MS10
MS11
1200 TONS/HR
MTST-00-CS-CNV-C2 (NOTE 1)
0-CS-SP-C2
0-CS-SP-H2
1200 TONS/HR
MTST-00-CS-CNV-H2 (NOTE 1)

CONTROLLED DRAWING

ANY CHANGES MADE TO THIS SYSTEM SHALL BE DOCUMENTED AS NOTED IN FOSSIL AND HYDRO CONTROLS MANUAL SECTION 6.3 .

Dominion

FOSSIL & HYDRO ENGINEERING
RICHMOND, VIRGINIA

2010 TITLE V RENEWAL APPLICATION
COAL HANDLING
MOUNT STORM POWER STATION

REV	DATE	DSGN	DRWN	CHKD	DSGN SUPV	LEAD ENGR	CIVIL ENGR	ELEC ENGR	MECH ENGR	ARCH	E.M. ENGR	I&C ENGR
0	91-19 10											

ISSUE PER ENVIRONMENTAL ENGINEERING

DSGN ——— DSGN SUPV RWM
DRWN TMD ENGR SUPV ———
CHKD EAW LEAD ENGR ———
DISPL ENGR ——— SCALE NONE

DATE 8/8/08 DGNSPEC FOR FILE VERIFICATION
DRAWING NO. MS-0-SP-STA-708
REV. 0
UNLESS OTHERWISE NOTED
SH OF

...\UNIT0\ENVIROMT\STA708.SP 1/21/2010 12:49:54 PM

CONTROLLED DRAWING

ANY CHANGES MADE TO THIS SYSTEM SHALL BE DOCUMENTED AS NOTED IN FOSSIL AND HYDRO CONTROLS MANUAL SECTION 6.3 .

Dominion™

FOSSIL & HYDRO ENGINEERING
RICHMOND, VIRGINIA

2010 V TITLE RENEWAL APPLICATION
COOLING TOWER UNIT 1 COMPONENT COOLING SYSTEM
MOUNT STORM POWER STATION

REV	DATE	DESCRIPTION
0	01-15-10	ISSUE PER ENVIRONMENTAL ENGINEERING

DSGN ———	DSGN SUPV RWM	DATEssssssss DGNSPEC FOR FILE VERIFICATION	
DRWN TMD	ENGR SUPV ———	DRAWING NO. MS-0-SP-STA-716	REV. 0
CHKD EAW	LEAD ENGR ———		
DISPL ENGR ———	SCALE NONE	UNLESS OTHERWISE NOTED	SH OF

...\UNIT0\ENVIROMT\STA716.SP 1/20/2010 11:11:39 AM

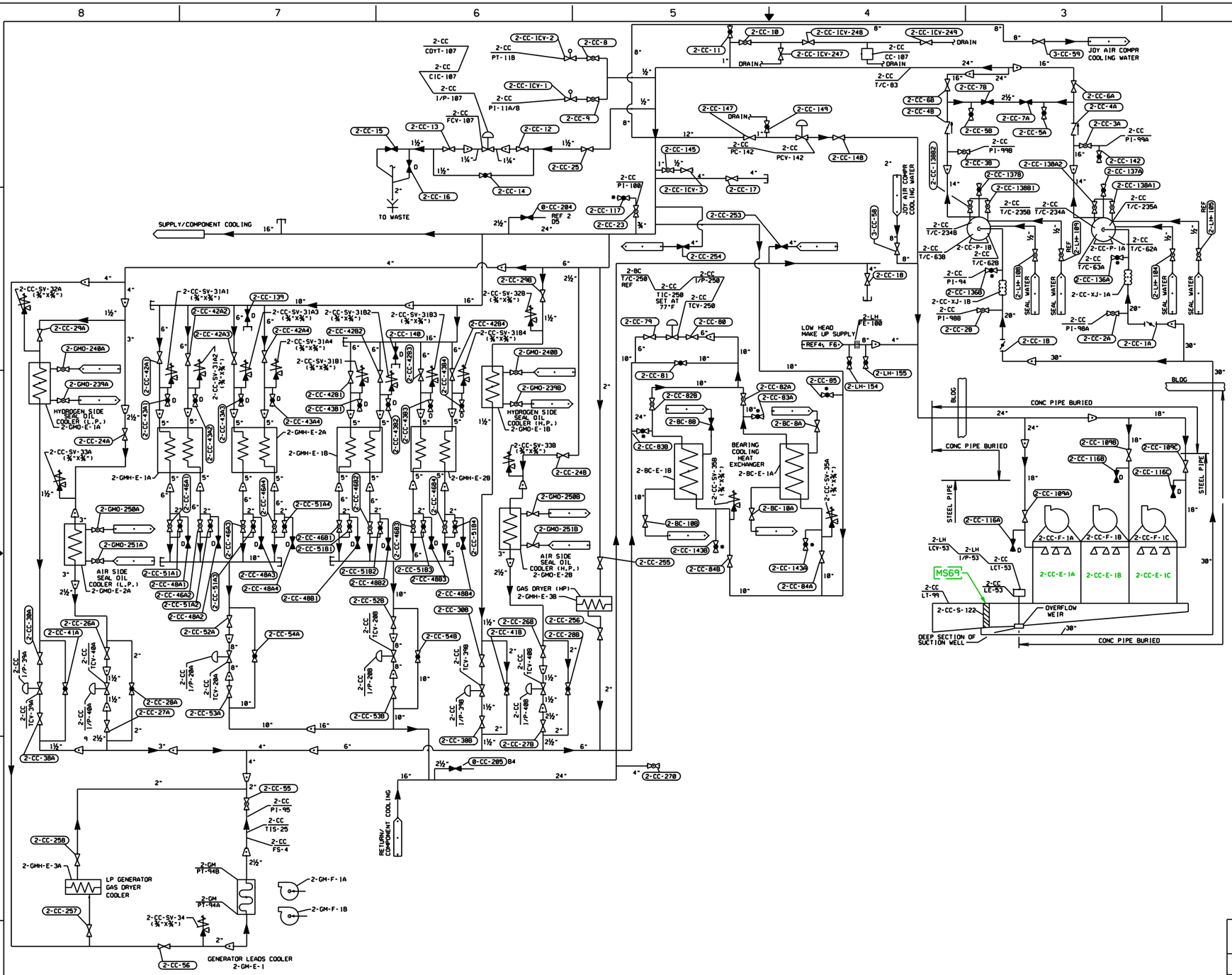

CONTROLLED DRAWING

ANY CHANGES MADE TO THIS SYSTEM SHALL BE DOCUMENTED AS NOTED IN FOSSIL AND HYDRO CONTROLS MANUAL SECTION 6.3 .

Dominion

FOSSIL & HYDRO ENGINEERING
RICHMOND, VIRGINIA

2010 TITLE V RENEWAL APPLICATION
COOLING TOWER UNIT 2 COMPONENT COOLING SYSTEM
MOUNT STORM POWER STATION

REV	DATE	DESCRIPTION
0	01-19-10	ISSUE PER ENVIRONMENTAL ENGINEERING

DSGN	——	DSGN SUPV	RWM
DRWN	TMD	ENGR SUPV	——
CHKD	EAW	LEAD ENGR	——
DISPL ENGR	——	SCALE	NONE

DATE&&&&&&& DGNSPEC FOR FILE VERIFICATION
DRAWING NO. MS-0-SP-STA-717 REV. 0
UNLESS OTHERWISE NOTED SH OF

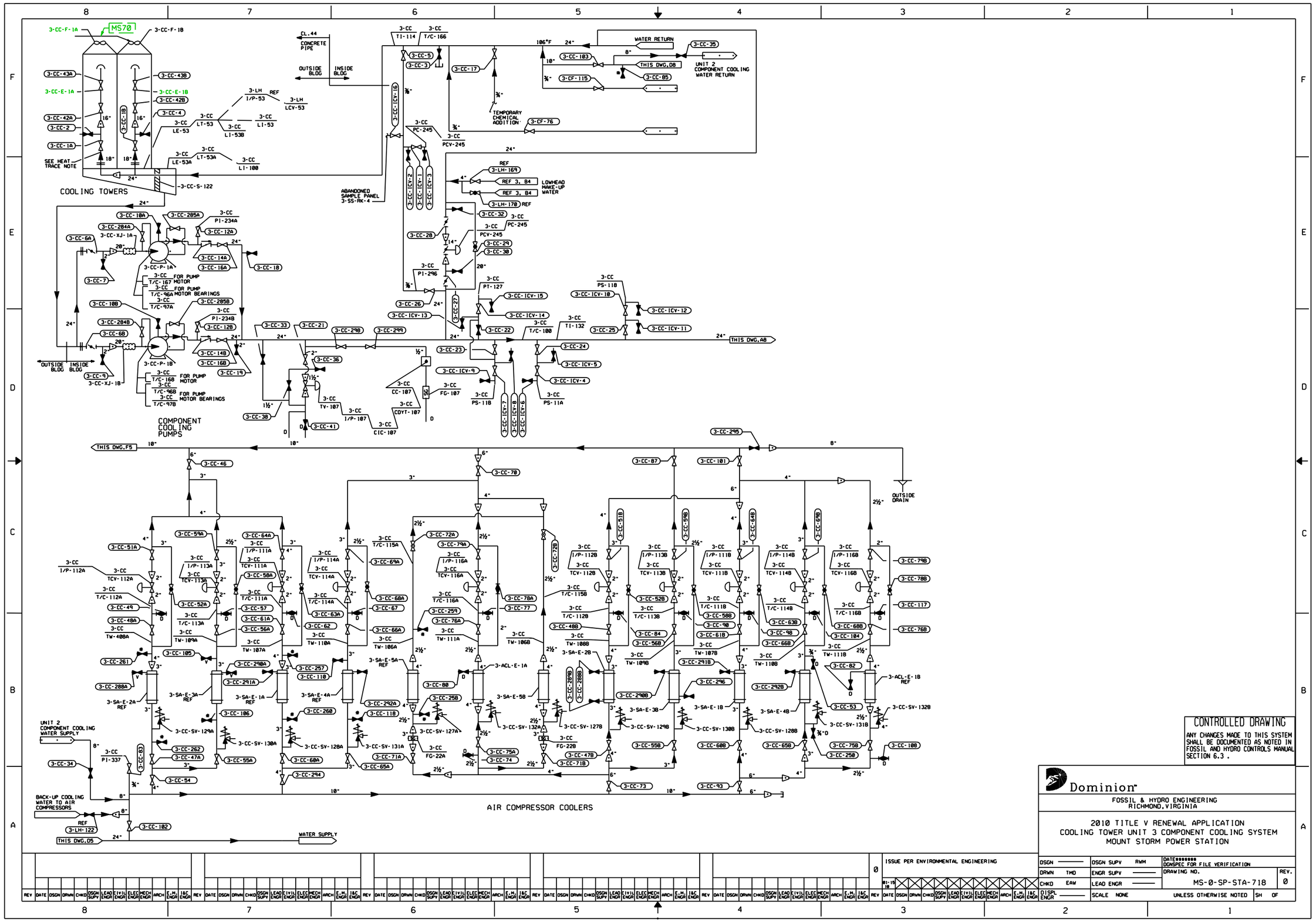

...\UNIT0\ENVIROMT\STA718.SP 1/20/2010 11:14:43 AM

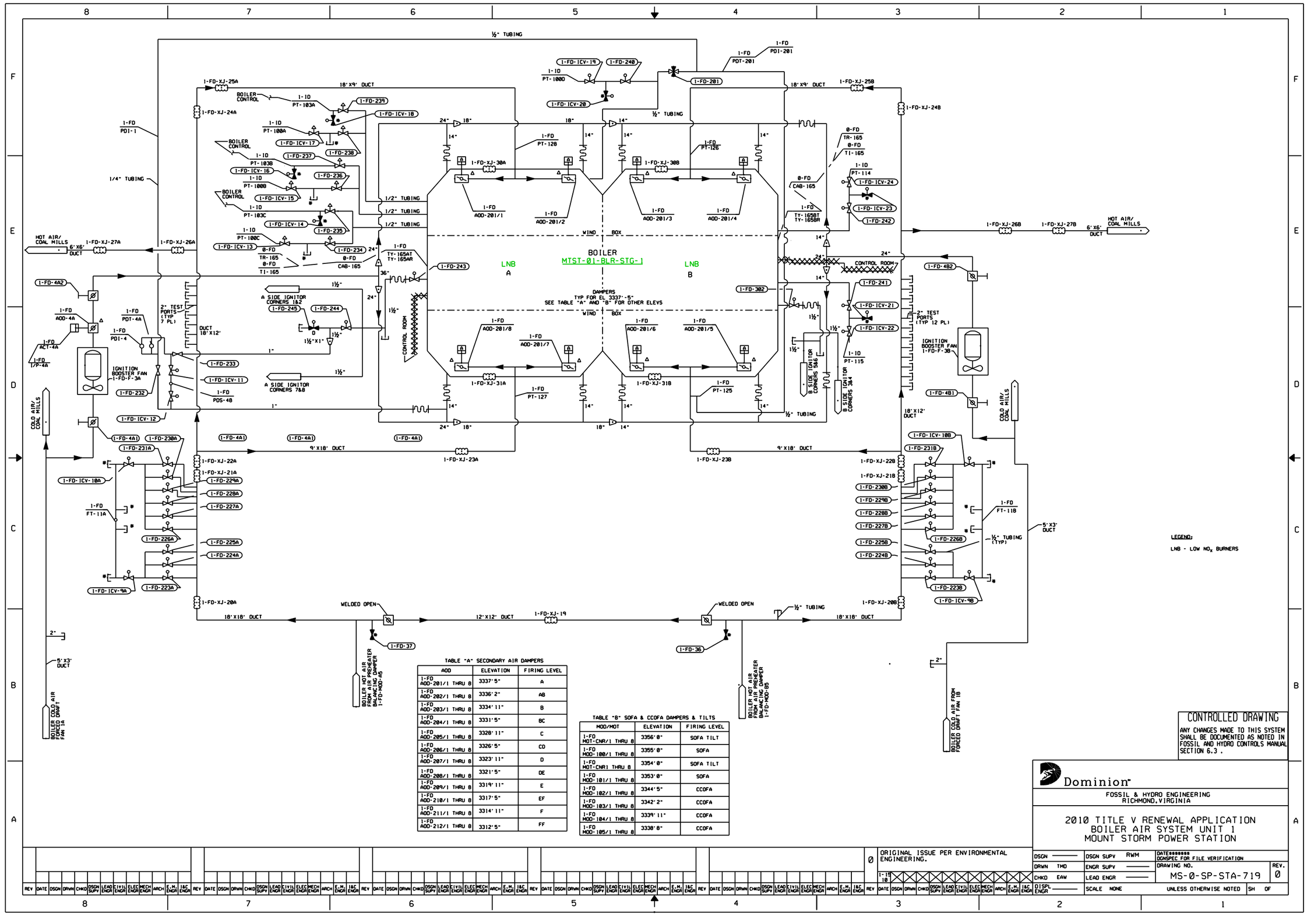

TABLE "A" SECONDARY AIR DAMPERS

AOD	ELEVATION	FIRING LEVEL
1-FD ADD-201/1 THRU 8	3337'5"	A
1-FD ADD-202/1 THRU 8	3336'2"	AB
1-FD ADD-203/1 THRU 8	3334'11"	B
1-FD ADD-204/1 THRU 8	3331'5"	BC
1-FD ADD-205/1 THRU 8	3328'11"	C
1-FD ADD-206/1 THRU 8	3326'5"	CD
1-FD ADD-207/1 THRU 8	3323'11"	D
1-FD ADD-208/1 THRU 8	3321'5"	DE
1-FD ADD-209/1 THRU 8	3319'11"	E
1-FD ADD-210/1 THRU 8	3317'5"	EF
1-FD ADD-211/1 THRU 8	3314'11"	F
1-FD ADD-212/1 THRU 8	3312'5"	FF

TABLE "B" SOFA & CCOFA DAMPERS & TILTS

MOD/MOT	ELEVATION	FIRING LEVEL
1-FD MOT-CNR/1 THRU 8	3356'0"	SOFA TILT
1-FD MOD-100/1 THRU 8	3355'0"	SOFA
1-FD MOT-CNR1 THRU 8	3354'0"	SOFA TILT
1-FD MOD-101/1 THRU 8	3353'0"	SOFA
1-FD MOD-102/1 THRU 8	3344'5"	CCOFA
1-FD MOD-103/1 THRU 8	3342'2"	CCOFA
1-FD MOD-104/1 THRU 8	3339'11"	CCOFA
1-FD MOD-105/1 THRU 8	3338'8"	CCOFA

CONTROLLED DRAWING

ANY CHANGES MADE TO THIS SYSTEM SHALL BE DOCUMENTED AS NOTED IN FOSSIL AND HYDRO CONTROLS MANUAL SECTION 6.3 .

Dominion

FOSSIL & HYDRO ENGINEERING
RICHMOND, VIRGINIA

2010 TITLE V RENEWAL APPLICATION
BOILER AIR SYSTEM UNIT 1
MOUNT STORM POWER STATION

REV	DESCRIPTION
0	ORIGINAL ISSUE PER ENVIRONMENTAL ENGINEERING.

DSGN		DSGN SUPV	RWM
DRWN	TMD	ENGR SUPV	
CHKD	EAW	LEAD ENGR	
DISPL ENGR		SCALE	NONE

DATE: DGNSPEC FOR FILE VERIFICATION

DRAWING NO. MS-0-SP-STA-719 REV. 0

UNLESS OTHERWISE NOTED SH OF

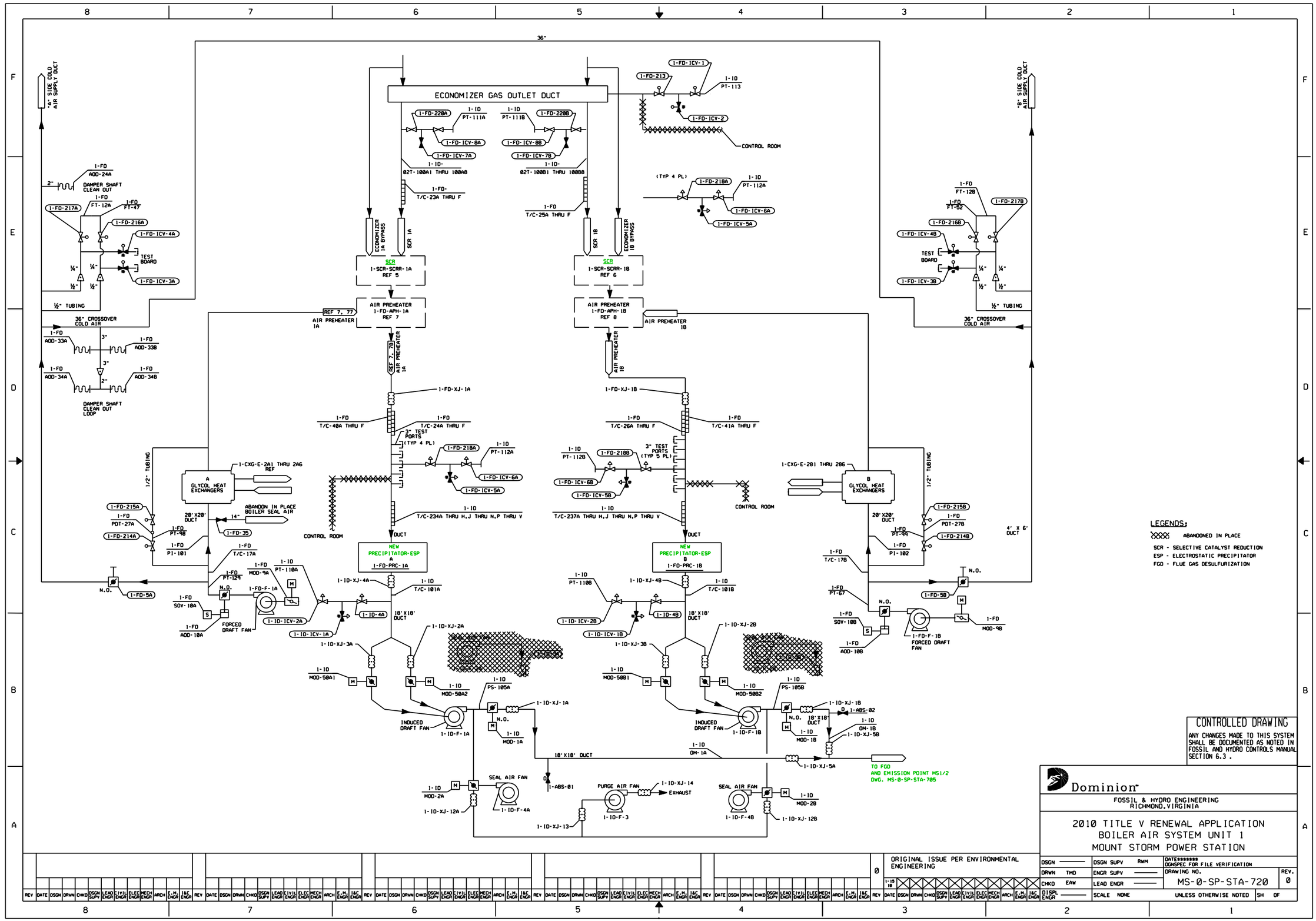
ECONOMIZER GAS OUTLET DUCT
"A" SIDE COLD AIR SUPPLY DUCT
"B" SIDE COLD AIR SUPPLY DUCT
1-FD-ICV-1
1-FD-213
1-ID PT-113
1-FD-ICV-2
CONTROL ROOM
1-FD-220A
1-ID PT-111A
1-FD-ICV-8A
1-FD-ICV-7A
1-ID PT-111B
1-FD-220B
1-FD-ICV-8B
1-FD-ICV-7B
1-ID-02T-100A1 THRU 100A8
1-ID-02T-100B1 THRU 100B8
1-FD-T/C-23A THRU F
1-FD T/C-25A THRU F
(TYP 4 PL)
1-FD-218A
1-ID PT-112A
1-FD-ICV-6A
1-FD-ICV-5A
ECONOMIZER 1A BYPASS
SCR 1A
SCR 1B
ECONOMIZER 1B BYPASS
SCR
1-SCR-SCRR-1A REF 5
1-SCR-SCRR-1B REF 6
AIR PREHEATER 1-FD-APH-1A REF 7
AIR PREHEATER 1-FD-APH-1B REF 8
REF 7, 77 AIR PREHEATER 1A
AIR PREHEATER 1B
REF 7, 78 AIR PREHEATER 1A
AIR PREHEATER 1B
1-FD-XJ-1A
1-FD-XJ-1B
1-FD T/C-40A THRU F
1-FD T/C-24A THRU F
1-FD T/C-26A THRU F
1-FD T/C-41A THRU F
3" TEST PORTS (TYP 4 PL)
3" TEST PORTS (TYP 5 PL)
1-ID PT-112B
1-FD-218B
1-FD-ICV-6B
1-FD-ICV-5B
1-ID T/C-234A THRU H,J THRU N,P THRU V
1-ID T/C-237A THRU H,J THRU N,P THRU V
CONTROL ROOM
DUCT
NEW PRECIPITATOR-ESP A 1-FD-PRC-1A
NEW PRECIPITATOR-ESP B 1-FD-PRC-1B
1-ID-XJ-4A
1-ID T/C-101A
1-ID-XJ-4B
1-ID T/C-101B
1-ID PT-110B
1-ID-ICV-2B
1-ID-ICV-1B
1-ID-4B
18"X18" DUCT
1-ID-XJ-2A
1-ID-XJ-2B
1-ID-XJ-3A
1-ID-XJ-3B
SEAL AIR FAN
1-ID-F-2A
1-ID-F-2B
1-ID MOD-50A1
1-ID MOD-50A2
1-ID MOD-50B1
1-ID MOD-50B2
1-ID PS-105A
1-ID PS-105B
INDUCED DRAFT FAN
1-ID-F-1A
1-ID-F-1B
N.O.
1-ID MOD-1A
1-ID MOD-1B
1-ID-XJ-1A
1-ID-XJ-1B
1-ID-XJ-5A
1-ID-XJ-5B
1-ABS-02
1-ID OM-1B
1-ID-XJ-5B
1-ID OM-1A
TO FGD AND EMISSION POINT MS1/2 DWG. MS-0-SP-STA-705
1-ID MOD-2A
1-ID-XJ-12A
1-ID-F-4A
1-ABS-01
PURGE AIR FAN
1-ID-XJ-14
EXHAUST
1-ID-F-3
1-ID-XJ-13
1-ID MOD-2B
1-ID-XJ-12B
1-ID-F-4B
1-FD 40D-24A
2"
DAMPER SHAFT CLEAN OUT
1-FD-217A
1-FD FT-12A
1-FD PT-47
1-FD-216A
1-FD-ICV-4A
TEST BOARD
1-FD-ICV-3A
1/4"
1/2"
1/2" TUBING
36" CROSSOVER COLD AIR
1-FD 40D-33A
1-FD 40D-33B
1-FD 40D-34A
1-FD 40D-34B
3"
2"
DAMPER SHAFT CLEAN OUT LOOP
1-FD FT-12B
1-FD FT-52
1-FD-217B
1-FD-216B
1-FD-ICV-4B
1-FD-ICV-3B
1-CXG-E-2A1 THRU 2A6 REF
A GLYCOL HEAT EXCHANGERS
B GLYCOL HEAT EXCHANGERS
1-CXG-E-281 THRU 286
1/2" TUBING
1-FD-215A
1-FD PDT-27A
1-FD-214A
1-FD PT-98
1-FD PI-101
20"X20" DUCT
14"
ABANDON IN PLACE BOILER SEAL AIR
1-FD-35
1-FD T/C-17A
1-FD PT-124
1-FD MOD-9A
1-ID PT-110A
1-FD-F-1A
1-FD-ICV-2A
1-FD-ICV-1A
1-FD SOV-10A
1-FD ADD-10A
FORCED DRAFT FAN
1-FD-5A
1-FD-215B
1-FD PDT-27B
1-FD-214B
1-FD PT-99
1-FD PI-102
1-FD T/C-17B
1-FD PT-67
1-FD-5B
1-FD SOV-10B
1-FD ADD-10B
1-FD-F-1B
1-FD MOD-9B
4' X 6' DUCT
LEGENDS:
ABANDONED IN PLACE
SCR - SELECTIVE CATALYST REDUCTION
ESP - ELECTROSTATIC PRECIPITATOR
FGD - FLUE GAS DESULFURIZATION
CONTROLLED DRAWING
ANY CHANGES MADE TO THIS SYSTEM SHALL BE DOCUMENTED AS NOTED IN FOSSIL AND HYDRO CONTROLS MANUAL SECTION 6.3 .
Dominion
FOSSIL & HYDRO ENGINEERING
RICHMOND, VIRGINIA
2010 TITLE V RENEWAL APPLICATION
BOILER AIR SYSTEM UNIT 1
MOUNT STORM POWER STATION
ORIGINAL ISSUE PER ENVIRONMENTAL ENGINEERING
DSGN
DRWN TMD
CHKD EAW
DSGN SUPV RWM
ENGR SUPV
LEAD ENGR
DISPL ENGR
SCALE NONE
UNLESS OTHERWISE NOTED
DATE
DGNSPEC FOR FILE VERIFICATION
DRAWING NO. MS-0-SP-STA-720
REV. 0
SH OF

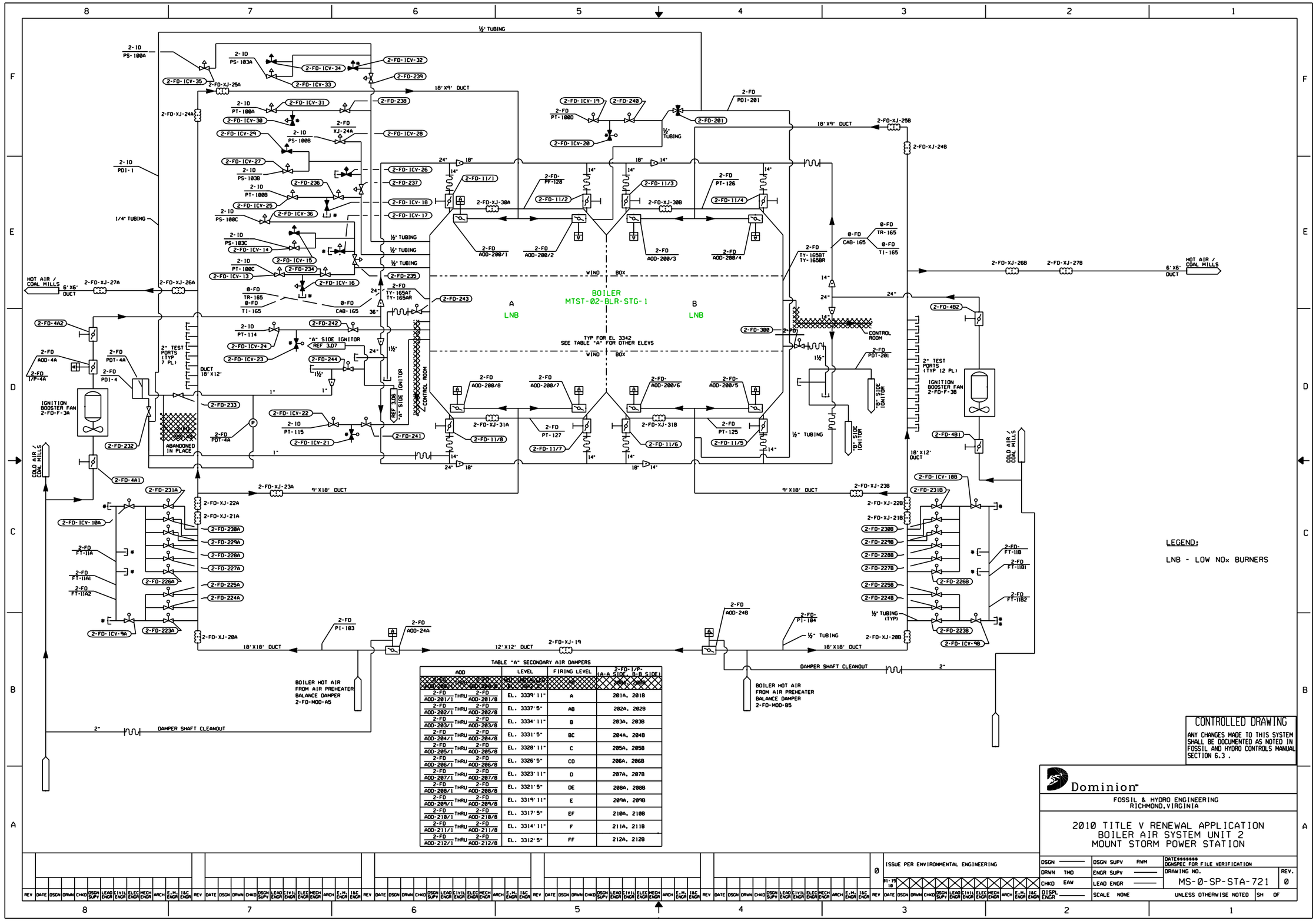

TABLE "A" SECONDARY AIR DAMPERS

AOD	LEVEL	FIRING LEVEL	2-FD-I/P- (A-A SIDE, B-B SIDE)
2-FD AOD-201/1 THRU 2-FD AOD-201/8	EL. 3339'11"	A	201A, 201B
2-FD AOD-202/1 THRU 2-FD AOD-202/8	EL. 3337'5"	AB	202A, 202B
2-FD AOD-203/1 THRU 2-FD AOD-203/8	EL. 3334'11"	B	203A, 203B
2-FD AOD-204/1 THRU 2-FD AOD-204/8	EL. 3331'5"	BC	204A, 204B
2-FD AOD-205/1 THRU 2-FD AOD-205/8	EL. 3328'11"	C	205A, 205B
2-FD AOD-206/1 THRU 2-FD AOD-206/8	EL. 3326'5"	CD	206A, 206B
2-FD AOD-207/1 THRU 2-FD AOD-207/8	EL. 3323'11"	D	207A, 207B
2-FD AOD-208/1 THRU 2-FD AOD-208/8	EL. 3321'5"	DE	208A, 208B
2-FD AOD-209/1 THRU 2-FD AOD-209/8	EL. 3319'11"	E	209A, 209B
2-FD AOD-210/1 THRU 2-FD AOD-210/8	EL. 3317'5"	EF	210A, 210B
2-FD AOD-211/1 THRU 2-FD AOD-211/8	EL. 3314'11"	F	211A, 211B
2-FD AOD-212/1 THRU 2-FD AOD-212/8	EL. 3312'5"	FF	212A, 212B

CONTROLLED DRAWING

ANY CHANGES MADE TO THIS SYSTEM SHALL BE DOCUMENTED AS NOTED IN FOSSIL AND HYDRO CONTROLS MANUAL SECTION 6.3 .

Dominion

FOSSIL & HYDRO ENGINEERING
RICHMOND, VIRGINIA

2010 TITLE V RENEWAL APPLICATION
BOILER AIR SYSTEM UNIT 2
MOUNT STORM POWER STATION

REV	DATE	DESCRIPTION
0	01-19-10	ISSUE PER ENVIRONMENTAL ENGINEERING

DSGN ——— DSGN SUPV RWM
DRWN TMD ENGR SUPV ———
CHKD EAW LEAD ENGR ———
DISPL ENGR ——— SCALE NONE

DATE DGNSPEC FOR FILE VERIFICATION
DRAWING NO. MS-0-SP-STA-721 REV. 0
UNLESS OTHERWISE NOTED SH OF

...\UNIT0\ENVIROMT\STA721.SP 1/20/2010 11:19:53 AM

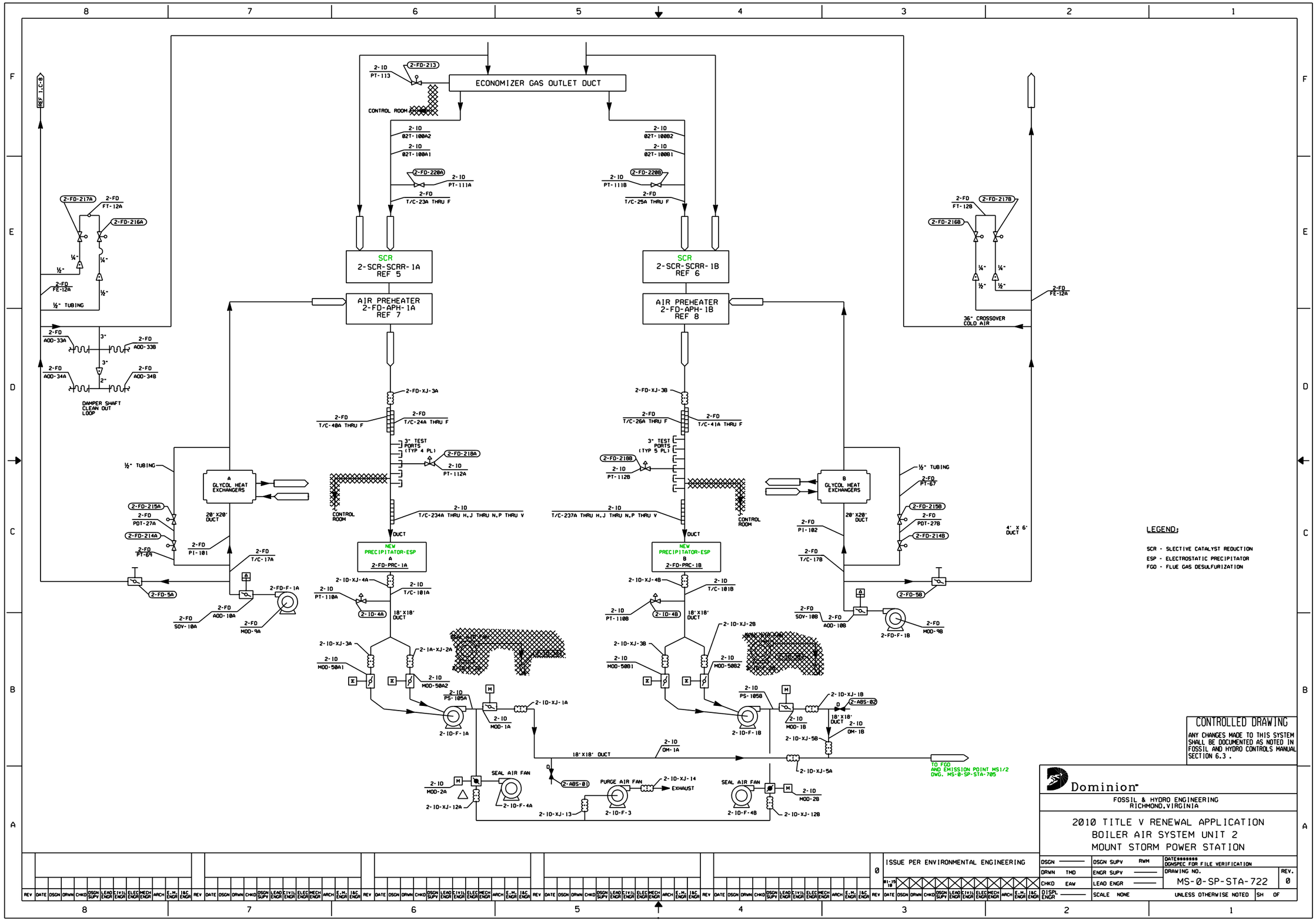

...\UNIT0\ENVIROMT\STA722.SP 1/20/2010 11:22:14 AM

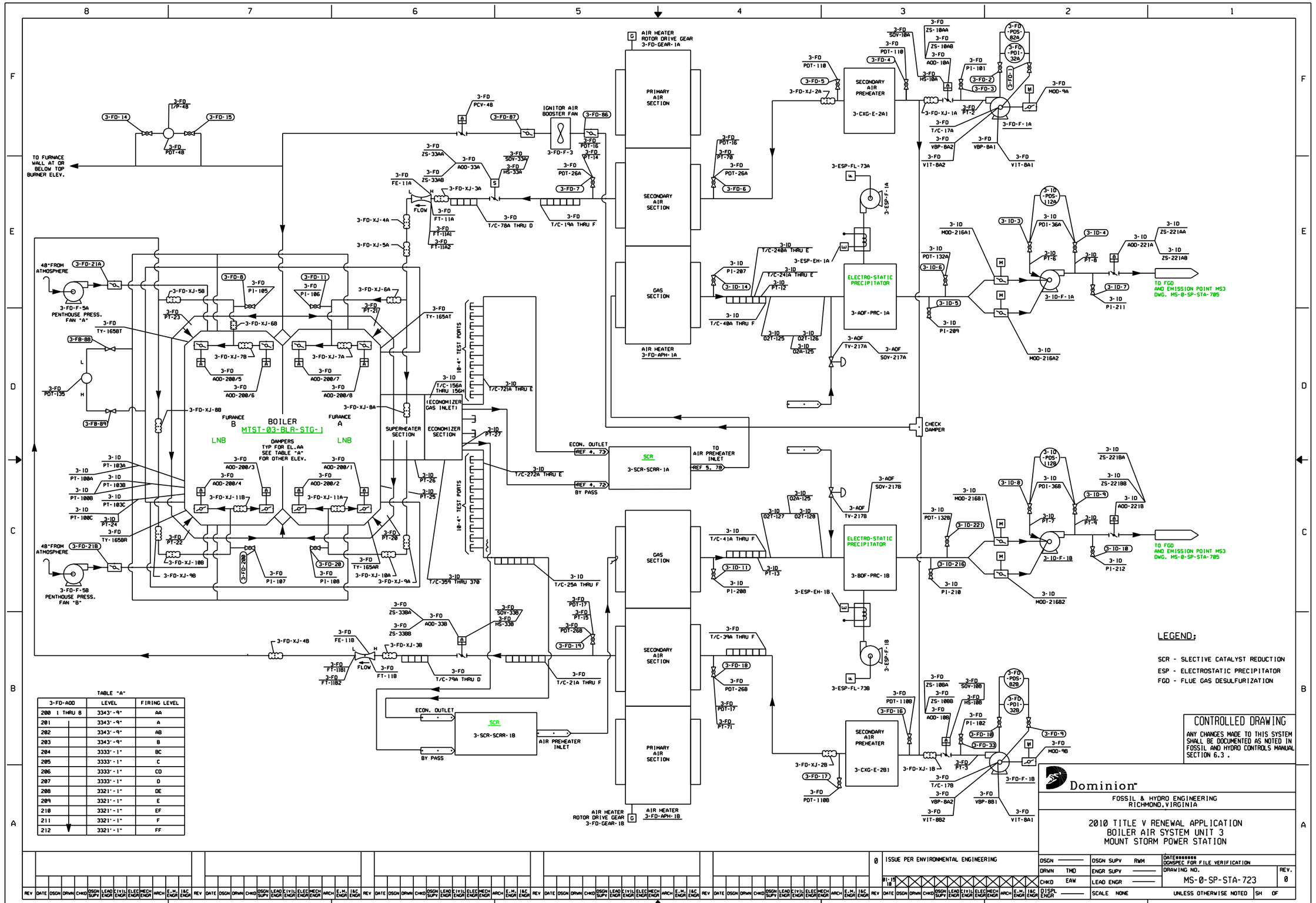

...\UNIT0\ENVIROMT\STA723.SP 1/20/2010 11:23:28 AM

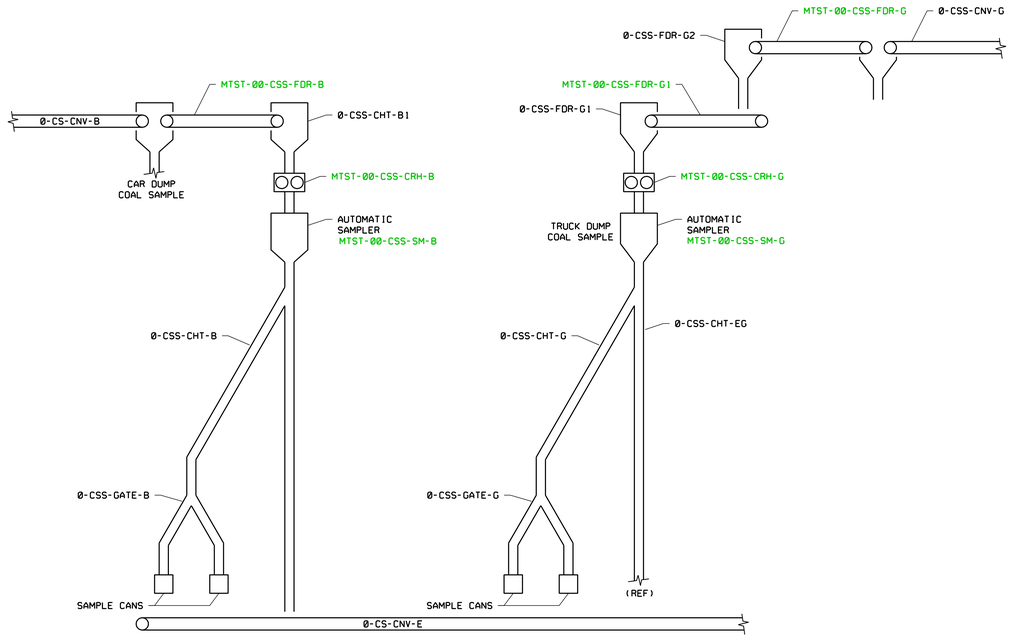

MS15

CONTROLLED DRAWING
ANY CHANGES MADE TO THIS SYSTEM SHALL BE DOCUMENTED AS NOTED IN FOSSIL AND HYDRO CONTROLS MANUAL SECTION 6.3 .

Dominion

FOSSIL & HYDRO ENGINEERING
RICHMOND, VIRGINIA

2010 TITLE V RENEWAL APPLICATION
FUEL SAMPLING SYSTEM
MOUNT STORM POWER STATION

REV	DATE	DESCRIPTION
0	01-15-10	ISSUE PER ENVIRONMENTAL ENGINEERING

DSGN		DSGN SUPV	RWM
DRWN	TMO	ENGR SUPV	
CHKD	EAW	LEAD ENGR	
DISPL ENGR		SCALE	NONE

DATE $$$$$$$
DGNSPEC FOR FILE VERIFICATION
DRAWING NO. MS-0-SP-STA-709
REV. 0
UNLESS OTHERWISE NOTED
SH OF

\UNIT0\ENVIROMT\STA709.SP 1/26/2010 11:12:35 AM

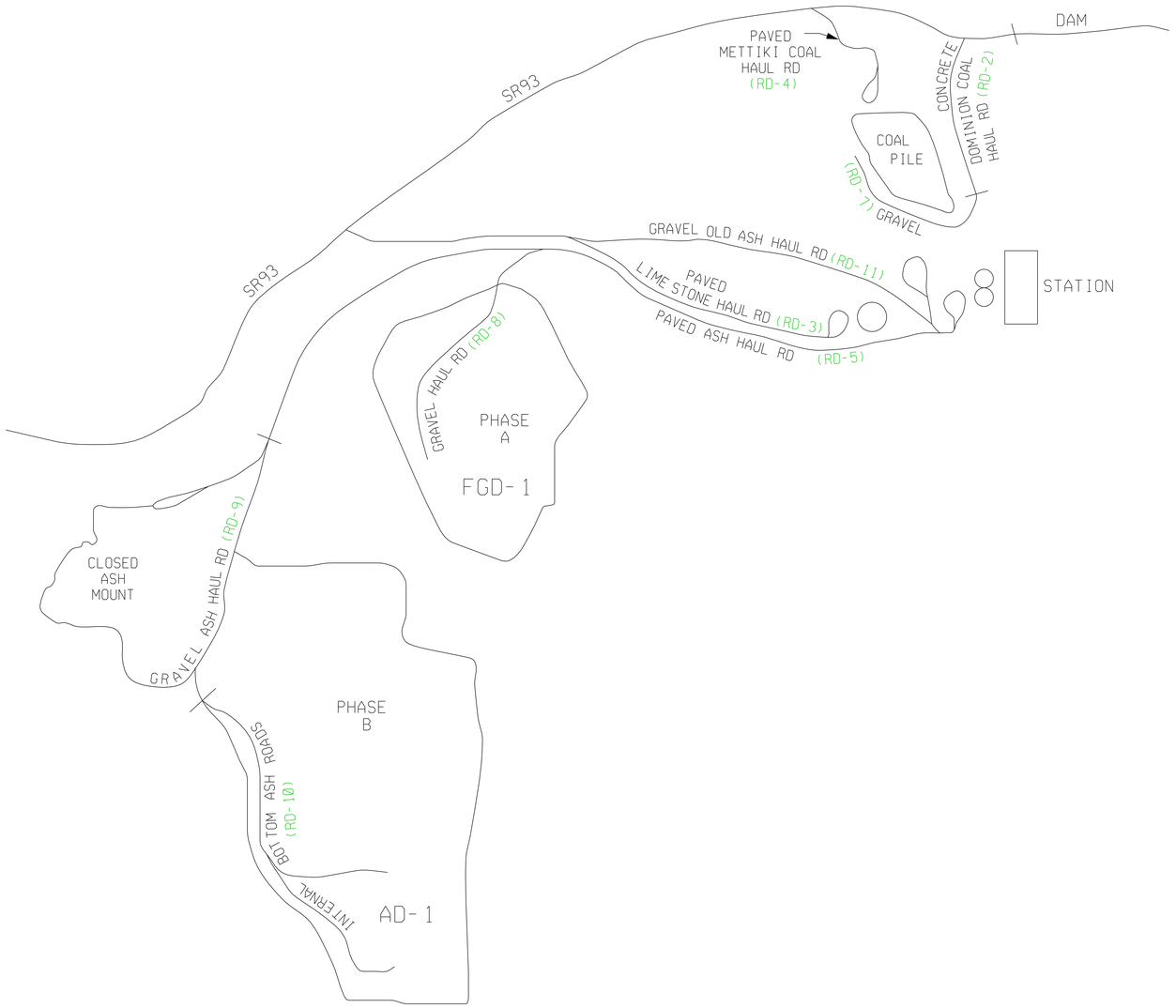

CONTROLLED DRAWING
ANY CHANGES MADE TO THIS SYSTEM SHALL BE DOCUMENTED AS NOTED IN FOSSIL AND HYDRO CONTROLS MANUAL SECTION 6.3 .

Dominion

FOSSIL & HYDRO ENGINEERING
RICHMOND, VIRGINIA

2010 TITLE V RENEWAL APPLICATION
PLANT ROADS
MOUNT STORM POWER STATION

REV	DESCRIPTION
Ø	ORIGINAL ISSUE PER ENVIRONMENTAL ENGINEERING

DSGN		DSGN SUPV	RWM
DRWN	TMD	ENGR SUPV	
CHKD	EAW	LEAD ENGR	
DISPL ENGR		SCALE	NONE

DATE $$$$$$$
DGNSPEC FOR FILE VERIFICATION
DRAWING NO. MS-Ø-SP-STA-724
REV. Ø
UNLESS OTHERWISE NOTED
SH OF