June 11, 2009

Via Certified Mail - Return Receipt Requested

Mr. John Benedict
Director
West Virginia Department of Environmental Protection
Division of Air Quality
601 57th Street SE
Charleston, WV 25304

**RE: Mountain State Carbon, LLC**
**Title V Operating Permit (R30-00900002-2004)**
**Renewal Application**

Dear Mr. Benedict:

Mountain State Carbon, LLC is submitting this Title V renewal application in accordance with WV Rule 30 (45CSR30).

Two copies of this application package are being submitted as per the instructions to complete a Title V renewal application. Please feel free to contact Harold Strohmeyer (740) 283-5148 if you have any questions regarding this submittal.

Sincerely,

Harold G. Strohmeyer
*Environmental Engineer*

enclosures: Title V Operating Permit Renewal Application

# TITLE V PERMIT RENEWAL APPLICATION
# MOUNTAIN STATE CARBON, LLC.
# FOLLANSBEE PLANT

**Prepared by:**

**Environmental Quality Management, Inc.**
**500 Market Street, Suite 302**
**Bridgewater, PA 15009**

**Prepared for:**

**Mountain State Carbon, LLC**
**West Virginia State Route 2**
**Follansbee, WV 16037**

**June 2009**

**PN 050484.0004.301**

## Table of Contents:


| Title V Renewal Sections: | Tab No. |
|---|---|
| General Application Forms | |
| Attachment A – Area Map | 1 |
| Attachment B – Plot Plan | 2 |
| Attachment C – Process Flow Diagrams | 3 |
| Attachment D – Emission Unit Table | 4 |
| Attachment E – Emission Unit Forms | 5 |
| Attachment F – Schedule of Compliance Form | 6 |
| Attachment G – Air Pollution Control Device Form | 7 |
| Attachment H – Compliance Assurance Monitoring (CAM) Plan Form | 8 |
| Attachment I – Facility Wide Applicable Requirements | 9 |
| Attachment J – Source Specific Requirements for Batteries 1, 2, 3, and 8 | 10 |
| Attachment K – Source Specific Requirements for Boilers 6, 7, 8, 9, and 10 | 11 |
| Attachment L – Source Specific Requirements for Coal Handling and Coke Sizing/Screening | 12 |
| Attachment M – Source Specific Requirements for Plant Roadways and Parking | 13 |
| Attachment N – Source Specific Requirements for By-Product Plant | 14 |
| Attachment O – Source Specific Requirements for Emergency Air Compressor and Emergency Generator | 15 |

# GENERAL APPLICATION FORMS

**WEST VIRGINIA DEPARTMENT OF ENVIRONMENTAL PROTECTION**
**DIVISION OF AIR QUALITY**
601 57th Street SE
Charleston, WV 25304
Phone: (304) 926-0475
www.wvdep.org/daq

# TITLE V PERMIT APPLICATION - GENERAL FORMS

***Section 1: General Information***

| | |
|---|---|
| 1. **Name of Applicant (As registered with the WV Secretary of State's Office):** Mountain State Carbon LLC | **2. Facility Name or Location:** West Virginia Route 2 Follansbee, Brooke County, WV 16037 |
| **3. DAQ Plant ID No.:** 03-54-00900002 | **4. Federal Employer ID No. (FEIN):** 20-2840611 |

5. **Permit Application Type:**

☐ Initial Permit — When did operations commence? 01/01/1917
☒ Permit Renewal — What is the expiration date of the existing permit? 12/17/2009
☐ Update to Initial Permit Application

**6. Type of Business Entity:**

☐ Corporation ☐ Governmental Agency
☐ Partnership ☒ Limited Partnership

**7. Is the Applicant the:**

☐ Owner ☐ Operator ☒ Both

If the Applicant is not both the owner and operator, please provide the name and address of the other party.

_____
_____
_____

**8. Number of onsite employees:**

476

**9. Governmental Code:**

☒ Privately owned and operated; 0
☐ Federally owned and operated; 1
☐ State government owned and operated; 2
☐ County government owned and operated; 3
☐ Municipality government owned and operated; 4
☐ District government owned and operated; 5

**10. Business Confidentiality Claims**

Does this application include confidential information (per 45CSR31)? ☐ Yes ☒ No

If yes, identify each segment of information on each page that is submitted as confidential, and provide justification for each segment claimed confidential, including the criteria under 45CSR§31-4.1, and in accordance with the DAQ's *"PRECAUTIONARY NOTICE-CLAIMS OF CONFIDENTIALITY"* guidance.

| 11. Mailing Address | | |
|---|---|---|
| **Street or P.O. Box:** Severstal-Wheeling, Inc Environmental Control<br>1134 Market Street | | |
| **City:** Wheeling | **State:** WV | **Zip: 26003-2971** |
| **Telephone Number:** (304) 234-2662 | **Fax Number:** (304) 234-2613 | |

| 12. Facility Location | | |
|---|---|---|
| **Street:** West Virginia Route 2 | **City:** Follansbee | **County:** Brooke |
| **UTM Easting:** 533.41 km | **UTM Northing:** 4465.76 km | **Zone:** ☒ 17 or ☐ 18 |
| **Directions:** Mountain State Carbon Follansbee Plant is located one mile north of Follansbee on West Virginia Route 2 along the eastern bank of the Ohio River. A site location map is attached. | | |
| **Portable Source?** ☐ Yes ☒ No | | |
| **Is facility located within a nonattainment area?** ☒ Yes ☐ No | | **If yes, for what air pollutants?** $PM_{2.5}$ |
| **Is facility located within 50 miles of another state?** ☒ Yes ☐ No | | **If yes, name the affected state(s).** Ohio<br>Pennsylvania |
| **Is facility located within 100 km of a Class I Area[1]?** ☐ Yes ☒ No<br>**If no, do emissions impact a Class I Area[1]?** ☐ Yes ☒ No | | **If yes, name the area(s).** |

[1] *Class I areas include Dolly Sods and Otter Creek Wilderness Areas in West Virginia, and Shenandoah National Park and James River Face Wilderness Area in Virginia.*

| 13. Contact Information | | |
|---|---|---|
| **Responsible Official:** Ronald Shumaker | | **Title:** Mgr. Engineering & Environmental Control |
| **Street or P.O. Box:** 1134 Market Street | | |
| **City:** Wheeling | **State:** WV | **Zip: 26033-2971** |
| **Telephone Number:** (740) 283-5640 | **Fax Number:** (740) 283-5635 | |
| **E-mail address:** ronald.shumaker@severstalna.com | | |
| **Environmental Contact:** Bud Smith | | **Title:** Director, Environmental Control |
| **Street or P.O. Box:** 1134 Market Street | | |
| **City:** Wheeling | **State:** WV | **Zip: 26003-2971** |
| **Telephone Number:** (304) 234-2662 | **Fax Number:** (304) 234-2613 | |
| **E-mail address:** bud.smith@severstalna.com | | |
| **Application Preparer:** George Mesing | | **Title:** Project Manager |
| **Company:** Environmental Quality Management | | |
| **Street or P.O. Box:** 500 Market Street Suite 302 | | |
| **City:** Bridgewater | **State:** PA | **Zip: 15009** |
| **Telephone Number:** (724) 775-2910 | **Fax Number:** (724) 775-2912 | |
| **E-mail address:** gmesing@eqm.com | | |

**14. Facility Description**

List all processes, products, NAICS and SIC codes for normal operation, in order of priority. Also list any process, products, NAICS and SIC codes associated with any alternative operating scenarios if different from those listed for normal operation.

| Process | Products | NAICS | SIC |
|---|---|---|---|
| Coke Plant | Coke | 331111 | 3312 |
| | | | |
| | | | |
| | | | |
| | | | |
| | | | |
| | | | |
| | | | |
| | | | |

**Provide a general description of operations.**

The primary operation at the Mountain State Carbon, LLC Follansbee Plant is to operate coke oven batteries to convert coal into coke for use at various other Severstal-Wheeling steel facilities and for commercial sales. This operation involves four coke oven batteries. In addition, the facility operates a by-product plant that recovers chemicals from the process and prepares the coke oven gas for use as fuel. The Follansbee plant also operates a material storage area located to the west and south.

15. Provide an **Area Map** showing plant location as **ATTACHMENT A.**

16. Provide a **Plot Plan(s)**, e.g. scaled map(s) and/or sketch(es) showing the location of the property on which the stationary source(s) is located as **ATTACHMENT B.** For instructions, refer to "Plot Plan - Guidelines."

17. Provide a detailed **Process Flow Diagram(s)** showing each process or emissions unit as **ATTACHMENT C.** Process Flow Diagrams should show all emission units, control equipment, emission points, and their relationships.

*Section 2: Applicable Requirements*

| **18. Applicable Requirements Summary** | |
|---|---|
| Instructions: Mark all applicable requirements. | |
| ☒ SIP | ☐ FIP |
| ☐ Minor source NSR (45CSR13) | ☐ PSD (45CSR14) |
| ☒ NESHAP (45CSR15) | ☐ Nonattainment NSR (45CSR19) |
| ☒ Section 111 NSPS | ☒ Section 112(d) MACT standards |
| ☐ Section 112(g) Case-by-case MACT | ☒ 112(r) RMP |
| ☐ Section 112(i) Early reduction of HAP | ☐ Consumer/commercial prod. reqts., section 183(e) |
| ☐ Section 129 Standards/Reqts. | ☐ Stratospheric ozone (Title VI) |
| ☐ Tank vessel reqt., section 183(f) | ☒ Emissions cap 45CSR§30-2.6.1 |
| ☐ NAAQS, increments or visibility (temp. sources) | ☐ 45CSR27 State enforceable only rule |
| ☒ 45CSR4 State enforceable only rule | ☐ Acid Rain (Title IV, 45CSR33) |
| ☐ Emissions Trading and Banking (45CSR28) | ☐ Compliance Assurance Monitoring (40CFR64) |
| ☐ $NO_x$ Budget Trading Program Non-EGUs (45CSR1) | ☐ $NO_x$ Budget Trading Program EGUs (45CSR26) |

| **19. Non Applicability Determinations** |
|---|
| **List all requirements which the source has determined not applicable and for which a permit shield is requested. The listing shall also include the rule citation and the reason why the shield applies.** |
| ☒ Permit Shield |

| **19. Non Applicability Determinations *(Continued)*** - *Attach additional pages as necessary.* |
|---|
| **See next pages** |

**19. Non Applicability Determinations *(Continued)***
**List all requirements which the source has determined not applicable and for which a permit shield is requested. The listing shall also include the rule citation and the reason why the shield applies.**

**45CSR33 (06/01/2000)** - Acid Rain Provisions and Permits does not apply to Wheeling-Pittsburgh Steel because it is not considered a Title IV (Acid Rain) Source.

**40 C.F.R. § 60 NSPS Subpart CD (12/19/95) -** Standards of Performance for Sulfuric Acid Production plants Emissions Guidelines and Compliance times does not apply because MSC, LLC (formerly Wheeling-Pittsburgh Steel) does not meet the definition of a sulfuric acid production unit as defined in 60.81(a).

**40 C.F.R. § 60 NSPS Subpart D (08/17/71)** - Standards of Performance for fossil-fuel-fired steam generators for which construction is commenced after August 17, 1971 does not apply because MSC LLC (formerly Wheeling-Pittsburgh Steel) boilers are less than the applicability size of 250 mm Btu/hr.

**40 C.F.R. § 60 NSPS Subpart Da (09/18/78) -** Standards of Performance for fossil-fuel-fired steam generators for which construction is commenced after September 18, 1978 does not apply because MSC LLC (formerly Wheeling-Pittsburgh Steel) boilers are less than the applicability size of 250 mm Btu/hr.

**40 C.F.R. § 60 NSPS Subpart Db (06/19/84) -** Standards of Performance for fossil-fuel-fired steam generators for which construction is commenced after June 19, 1984 does not apply because MSC LLC (formerly Wheeling-Pittsburgh Steel) boilers are less than the applicability size of 100 mm Btu/hr.

**40 C.F.R. § 60 NSPS Subpart E (08/17/71) -** Standards of Performance for Incinerators for which construction is commenced after August 17, 1971 does not apply because MSC LLC (formerly Wheeling-Pittsburgh Steel) does not operate equipment defined as incinerators (under 60.51).

**40 C.F.R. § 60 NSPS Subpart H (08/17/71)** - Standards of Performance for Sulfuric Acid Production plants does not apply because MSC, LLC (formerly Wheeling-Pittsburgh Steel) does not meet the definition of a sulfuric acid production unit as defined in 60.81(a).

**40 C.F.R. § 60 NSPS Subpart K (06/11/73)** - Standards of Performance for storage vessels for petroleum liquids for which construction, reconstruction, or modification commenced after June 11, 1973, and prior to May 19, 1978 does not apply because MSC, LLC (formerly Wheeling-Pittsburgh Steel) has not installed any tanks between these dates.

**40 C.F.R. § 60 NSPS Subpart Ka (05/18/78)** - Standards of Performance for storage vessels for petroleum liquids for which construction, reconstruction, or modification commenced after May 18, 1978, and prior to july 23, 1984 does not apply because MSC, LLC (formerly Wheeling-Pittsburgh Steel) has not installed any tanks between these dates.

**40 C.F.R. § 60 NSPS Subpart Kb (07/23/84) -** Standards of Performance for volatile organic liquid storage vessels (including petroleum liquid storage vessels) for which construction, reconstruction, or modification commenced after July 23, 1984 does not apply because MSC, LLC (formerly Wheeling-Pittsburgh Steel) is exempt by paragraph 60.110b (d)(1) [for vessels at coke oven by-product plants].

**40 C.F.R. §§ 60.251 - 60.254 NSPS Subpart Y (October 24, 1974)** - Standards of Performance for Coal Preparation Plants does not apply because MSC, LLC (formerly Wheeling-Pittsburgh Steel) does not apply since they commences construction or modification of their coal facilities prior to October 24, 1974.

**40 C.F.R. Part 60 Subpart VV (01/05/81)** - National Standards of Performance for Equipment Leaks of VOC in the Synthetic Organic Chemicals Manufacturing Industry does not apply to MSC, LLC (formerly Wheeling-Pittsburgh Steel) because the facility is not considered a part of the Synthetic Organic Chemical Manufacturing Industry.

**19. Non Applicability Determinations *(Continued)***
**List all requirements which the source has determined not applicable and for which a permit shield is requested. The listing shall also include the rule citation and the reason why the shield applies**

**40 C.F.R. §60 NSPS Subpart IIII (07/11/06)** - Standards of Performance for Stationary Compression Ignition Internal Combustion Engines does not apply because MSC, LLC (formerly Wheeling-Pittsburgh Steel) does not apply since MSC engines were not manufactured after April 1, 2006 (as per 60.4200(a)(2)(i).

**40 C.F.R. §60 NSPS Subpart JJJJ (01/18/08)** - Standards of Performance for Stationary Spark Ignition Internal Combustion Engines does not apply because MSC, LLC (formerly Wheeling-Pittsburgh Steel) does not operate engines with spark ignitions that were manufactured after July 1, 2008.

**40 C.F.R. Part 61 Subpart J (06/06/84)** - National Emission Standards for Equipment Leaks (Fugitive Emission Sources) of Benzene is not applicable to sources located in coke by-product recovery plant

**40 C.F.R. Part 61 Subpart Y (09/14/89)** - National Emission Standards for Benzene Emissions from Benzene Storage Vessels is not applied to storage vessels used for storing benzene at a coke by-product facility.

**40 C.F.R. Part 61 Subpart BB (03/07/90)** - National Emission Standards for Benzene Emissions from Benzene Transfer Operations is not applicable to benzene-laden liquid from coke by-product recovery plants.

**40 C.F.R. Part 63 Subpart F (10/24/97)** - National Emission Standards for Organic Hazardous Air Pollutants from the Synthetic Organic Chemical Manufacturing Industry does not apply to MSC, LLC (formerly Wheeling-Pittsburgh Steel) because the facility is not considered a part of the Synthetic Organic Chemical Manufacturing Industry.

**40 C.F.R. Part 63 Subpart G (04/22/94)** - National Emission Standards for Organic Hazardous Air Pollutants from the Synthetic Organic Chemical Manufacturing Industry Process Vents, Storage Vessels, Transfer Operations, and Wastewater does not apply to MSC, LLC (formerly Wheeling-Pittsburgh Steel) because the facility is not considered a part of the Synthetic Organic Chemical Manufacturing Industry.

**40 C.F.R. Part 63 Subpart H (01/11/93)** - National Emission Standards for Organic Hazardous Air Pollutants for Equipment Leaks does not apply to MSC, LLC (formerly Wheeling-Pittsburgh Steel) because the facility is not considered a part of the Synthetic Organic Chemical Manufacturers Industry.

**40 C.F.R. Part 63 Subpart I (01/11/93)** - National Emission Standards for Organic Hazardous Air Pollutants related to Equipment Leaks does not apply to MSC, LLC (formerly Wheeling-Pittsburgh Steel) because the facility is not considered a part of the Synthetic Organic Chemical Manufacturers Industry.

**40 C.F.R. Part 63 Subpart Q (09/08/94)** - National Emission Standards for Hazardous Air Pollutants for Industrial Process Cooling Towers does not apply to MSC, LLC (formerly Wheeling-Pittsburgh Steel) because the facility does not use chromium-based water treatment chemicals.

**40 C.F.R. Part 63 Subpart Y (09/19/95)** - National Emission Standards for Hazardous Air Pollutants for Marine Tank Vessel Loading Operations does not apply to MSC, LLC (formerly Wheeling-Pittsburgh Steel) because the vapor pressure of the light oil is less than 1.5 psia at 20 deg. C and is exempt from the rule.

**40 C.F.R. Part 63 Subpart FFFF (11/10/2003)** - National Emission Standards for Hazardous Air Pollutants: Miscellaneous Organic Chemical Manufacturing does not apply to MSC, LLC (formerly Wheeling-Pittsburgh Steel) because the facility is not produce ammonium sulfate via caprolactam as per 63.2435(b)(1)(3).

**40 C.F.R. Part 63 Subpart EEEE (02/03/2004)** - National Emission Standards for Hazardous Air Pollutants: Organic Liquids Distribution (Non-Gasoline) does not apply to MSC, LLC (formerly Wheeling-Pittsburgh Steel) because the facility components are subject to another NESHAP (Subparts L, V, and FF) as per 63.2338(c)(1).

**19. Non Applicability Determinations *(Continued)***
**List all requirements which the source has determined not applicable and for which a permit shield is requested. The listing shall also include the rule citation and the reason why the shield applies**

**40 C.F.R. Part 63 Subpart GGGGG (10/08/2003)** - National Emission Standards for Hazardous Air Pollutants: Site Remediation does not apply to MSC, LLC (formerly Wheeling-Pittsburgh Steel) because the facility (under WPSC) received an Administrative Order under Section 3008(h) of the Resource Conservation and Recovery Act from USPA to perform RCRA corrective Actions.

**40 C.F.R. Part 72 (01/11/93)** - Acid Rain Program General Provisions does not apply to MSC, LLC (formerly Wheeling-Pittsburgh Steel) because it is not considered a Title IV (Acid Rain) Source.

| ☒ Permit Shield |
|---|

| **20. Facility-Wide Applicable Requirements** |
|---|
| **List all facility-wide applicable requirements. For each applicable requirement, include the underlying rule/regulation citation and/or construction permit with the condition number. (*Note: Title V permit condition numbers alone are not the underlying applicable requirements*).**<br><br>Refer to Attachment I. |
| ☒ Permit Shield |
| **For all facility-wide applicable requirements listed above, provide monitoring/testing / recordkeeping / reporting which shall be used to demonstrate compliance. If the method is based on a permit or rule, include the condition number and/or citation. (Note: Each requirement listed above must have an associated method of demonstrating compliance. If there is not already a required method in place, then a method must be proposed.)**<br><br>Refer to Attachment I. |
| **Are you in compliance with all facility-wide applicable requirements?** ☒ Yes ☐ No<br><br>If no, complete the **Schedule of Compliance Form** as **ATTACHMENT F.** |

| 21. Active Permits/Consent Orders | | |
|---|---|---|
| Permit or Consent Order Number | Date of Issuance MM/DD/YYYY | List any Permit Determinations that Affect the Permit *(if any)* |
| R13-2591A (WV) | 05/11/2005 | Construction permit issued |
| R13-2591 (WV) | 02/15/2005 | Construction permit issued |
| Permit to install 06-07507 (Ohio EPA) | 01/06/2005 | Annual COG consumption limitation & sulfuric acid production limitation |
| R30-00900002-2004 | 12/7/2004 | Current Operating Permit |
| R13-1939A | 8/23/2003 | Construction permit issued |
| Civil Action No. 5:93CV195 | 1/30/1996 | Federally Enforceable Only |
| R13-1652 | 9/2/1994 | Construction permit issued |
| CO-SIP-91-29 | 11/14/1991 | Consent Order |
| R13-0090 | 7/12/1974 | Construction permit issued |
| | / / | |
| | / / | |
| | / / | |
| | / / | |
| | / / | |
| | / / | |
| | / / | |
| | / / | |
| | / / | |
| | / / | |
| | / / | |
| | / / | |
| | / / | |
| | / / | |
| | / / | |
| | / / | |
| | / / | |

| 22. Inactive Permits/Obsolete Permit Conditions | | |
|---|---|---|
| Permit Number | Date of Issuance | Permit Condition Number |
| R14-0025 (WV) | 04/01/2004 | Draft Construction Permit |
| | / / | |
| | / / | |
| | / / | |
| | / / | |
| | / / | |
| | / / | |
| | / / | |
| | / / | |
| | / / | |
| | / / | |
| | / / | |
| | / / | |
| | / / | |
| | / / | |
| | / / | |
| | / / | |
| | / / | |
| | / / | |
| | / / | |
| | / / | |
| | / / | |
| | / / | |
| | / / | |
| | / / | |
| | / / | |

***Section 3: Facility-Wide Emissions***

| **23. Facility-Wide Emissions Summary [Tons per Year]** | |
|---|---|
| Criteria Pollutants | Potential Emissions |
| Carbon Monoxide (CO) | 2,767.32 |
| Nitrogen Oxides ($NO_X$) | 809.85 |
| Lead (Pb) | 0.023 |
| Particulate Matter ($PM_{2.5}$)[1] | 156 |
| Particulate Matter ($PM_{10}$)[1] | 263.47 |
| Total Particulate Matter (TSP) | 884.89 |
| Sulfur Dioxide ($SO_2$) | 2,723.59 |
| Volatile Organic Compounds (VOC) | 2,490.06 |
| Hazardous Air Pollutants[2] | Potential Emissions |
| Benzene | 742.12 |
| Coke Oven Emissions | 995.53 |
| Ethylbenzene | 8.75 |
| Toluene | 120.76 |
| Phenol | 5.11 |
| Xylene | 32.05 |
| Napthalene | 7.98 |
| Cyanide Compounds | 30.76 |
| Manganese | 0.000125 |
| Regulated Pollutants other than Criteria and HAP | Potential Emissions |
| | |
| | |
| | |
| | |
| | |
| | |

*[1] $PM_{2.5}$ and $PM_{10}$ are components of TSP.*
*[2] For HAPs that are also considered PM or VOCs, emissions should be included in both the HAPs section and the Criteria Pollutants section.*

***Section 4: Insignificant Activities***

| | | |
|---|---|---|
| **24. Insignificant Activities (Check all that apply)** | | |
| ☒ | 1. | Air compressors and pneumatically operated equipment, including hand tools. |
| ☐ | 2. | Air contaminant detectors or recorders, combustion controllers or shutoffs. |
| ☒ | 3. | Any consumer product used in the same manner as in normal consumer use, provided the use results in a duration and frequency of exposure which are not greater than those experienced by consumer, and which may include, but not be limited to, personal use items; janitorial cleaning supplies, office supplies and supplies to maintain copying equipment. |
| ☒ | 4. | Bathroom/toilet vent emissions. |
| ☒ | 5. | Batteries and battery charging stations, except at battery manufacturing plants. |
| ☒ | 6. | Bench-scale laboratory equipment used for physical or chemical analysis, but not lab fume hoods or vents. Many lab fume hoods or vents might qualify for treatment as insignificant (depending on the applicable SIP) or be grouped together for purposes of description. |
| ☐ | 7. | Blacksmith forges. |
| ☒ | 8. | Boiler water treatment operations, not including cooling towers. |
| ☒ | 9. | Brazing, soldering or welding equipment used as an auxiliary to the principal equipment at the source. |
| ☐ | 10. | $CO_2$ lasers, used only on metals and other materials which do not emit HAP in the process. |
| ☒ | 11. | Combustion emissions from propulsion of mobile sources, except for vessel emissions from Outer Continental Shelf sources. |
| ☒ | 12. | Combustion units designed and used exclusively for comfort heating that use liquid petroleum gas or natural gas as fuel. |
| ☒ | 13. | Comfort air conditioning or ventilation systems not used to remove air contaminants generated by or released from specific units of equipment. |
| ☐ | 14. | Demineralized water tanks and demineralizer vents. |
| ☐ | 15. | Drop hammers or hydraulic presses for forging or metalworking. |
| ☐ | 16. | Electric or steam-heated drying ovens and autoclaves, but not the emissions from the articles or substances being processed in the ovens or autoclaves or the boilers delivering the steam. |
| ☐ | 17. | Emergency (backup) electrical generators at residential locations. |
| ☒ | 18. | Emergency road flares. |
| ☒ | 19. | Emission units which do not have any applicable requirements and which emit criteria pollutants (CO, $NO_x$, $SO_2$, VOC and PM) into the atmosphere at a rate of less than 1 pound per hour and less than 10,000 pounds per year aggregate total for each criteria pollutant from all emission units.<br><br>Please specify all emission units for which this exemption applies along with the quantity of criteria pollutants emitted on an hourly and annual basis:<br><br>Sanitary, Sinter, Coke WWTP-0.6lb/hr VOC, 2.8 tpy VOC<br>Sand Silo<br>Laboratory Equipment<br>AKJ-Recycles coal tar related materials<br>Parts Washers-6.6 lb/gal VOC, 3.5 tpy VOC<br>_____<br>_____<br>_____<br>_____ |

| 24. Insignificant Activities (Check all that apply) | | |
|---|---|---|
| ☐ | 20. | Emission units which do not have any applicable requirements and which emit hazardous air pollutants into the atmosphere at a rate of less than 0.1 pounds per hour and less than 1,000 pounds per year aggregate total for all HAPs from all emission sources. This limitation cannot be used for any source which emits dioxin/furans nor for toxic air pollutants as per 45CSR27.<br><br>Please specify all emission units for which this exemption applies along with the quantity of hazardous air pollutants emitted on an hourly and annual basis:<br><br>_____<br>_____<br>_____<br>_____<br>_____ |
| ☐ | 21. | Environmental chambers not using hazardous air pollutant (HAP) gases. |
| ☐ | 22. | Equipment on the premises of industrial and manufacturing operations used solely for the purpose of preparing food for human consumption. |
| ☐ | 23. | Equipment used exclusively to slaughter animals, but not including other equipment at slaughterhouses, such as rendering cookers, boilers, heating plants, incinerators, and electrical power generating equipment. |
| ☒ | 24. | Equipment used for quality control/assurance or inspection purposes, including sampling equipment used to withdraw materials for analysis. |
| ☒ | 25. | Equipment used for surface coating, painting, dipping or spray operations, except those that will emit VOC or HAP. |
| ☒ | 26. | Fire suppression systems. |
| ☒ | 27. | Firefighting equipment and the equipment used to train firefighters. |
| ☐ | 28. | Flares used solely to indicate danger to the public. |
| ☐ | 29. | Fugitive emission related to movement of passenger vehicle provided the emissions are not counted for applicability purposes and any required fugitive dust control plan or its equivalent is submitted. |
| ☐ | 30. | Hand-held applicator equipment for hot melt adhesives with no VOC in the adhesive formulation. |
| ☒ | 31. | Hand-held equipment for buffing, polishing, cutting, drilling, sawing, grinding, turning or machining wood, metal or plastic. |
| ☐ | 32. | Humidity chambers. |
| ☐ | 33. | Hydraulic and hydrostatic testing equipment. |
| ☐ | 34. | Indoor or outdoor kerosene heaters. |
| ☒ | 35. | Internal combustion engines used for landscaping purposes. |
| ☐ | 36. | Laser trimmers using dust collection to prevent fugitive emissions. |
| ☒ | 37. | Laundry activities, except for dry-cleaning and steam boilers. |
| ☐ | 38. | Natural gas pressure regulator vents, excluding venting at oil and gas production facilities. |
| ☐ | 39. | Oxygen scavenging (de-aeration) of water. |
| ☐ | 40. | Ozone generators. |
| ☒ | 41. | Plant maintenance and upkeep activities (e.g., grounds-keeping, general repairs, cleaning, painting, welding, plumbing, re-tarring roofs, installing insulation, and paving parking lots) provided these activities are not conducted as part of a manufacturing process, are not related to the source's primary business activity, and not otherwise triggering a permit modification. (Cleaning and painting activities qualify if they are not subject to VOC or HAP control requirements. Asphalt batch plant |

| 24. Insignificant Activities (Check all that apply) | | |
|---|---|---|
| | | owners/operators must still get a permit if otherwise requested.) |
| ☒ | 42. | Portable electrical generators that can be moved by hand from one location to another. "Moved by Hand" means that it can be moved without the assistance of any motorized or non-motorized vehicle, conveyance, or device. |
| ☒ | 43. | Process water filtration systems and demineralizers. |
| ☒ | 44. | Repair or maintenance shop activities not related to the source's primary business activity, not including emissions from surface coating or de-greasing (solvent metal cleaning) activities, and not otherwise triggering a permit modification. |
| ☒ | 45. | Repairs or maintenance where no structural repairs are made and where no new air pollutant emitting facilities are installed or modified. |
| ☒ | 46. | Routine calibration and maintenance of laboratory equipment or other analytical instruments. |
| ☐ | 47. | Salt baths using nonvolatile salts that do not result in emissions of any regulated air pollutants. Shock chambers. |
| ☐ | 48. | Shock chambers. |
| ☐ | 49. | Solar simulators. |
| ☒ | 50. | Space heaters operating by direct heat transfer. |
| ☐ | 51. | Steam cleaning operations. |
| ☒ | 52. | Steam leaks. |
| ☐ | 53. | Steam sterilizers. |
| ☒ | 54. | Steam vents and safety relief valves. |
| ☒ | 55. | Storage tanks, reservoirs, and pumping and handling equipment of any size containing soaps, vegetable oil, grease, animal fat, and nonvolatile aqueous salt solutions, provided appropriate lids and covers are utilized. |
| ☒ | 56. | Storage tanks, vessels, and containers holding or storing liquid substances that will not emit any VOC or HAP. Exemptions for storage tanks containing petroleum liquids or other volatile organic liquids should be based on size limits such as storage tank capacity and vapor pressure of liquids stored and are not appropriate for this list. |
| ☐ | 57. | Such other sources or activities as the Director may determine. |
| ☐ | 58. | Tobacco smoking rooms and areas. |
| ☒ | 59. | Vents from continuous emissions monitors and other analyzers. |

*Section 5: Emission Units, Control Devices, and Emission Points*

| **25. Equipment Table** |
|---|
| Fill out the **Title V Equipment Table** and provide it as **ATTACHMENT D**. |
| **26. Emission Units** |
| For each emission unit listed in the **Title V Equipment Table**, fill out and provide an **Emission Unit Form** as **ATTACHMENT E**. |
| For each emission unit not in compliance with an applicable requirement, fill out a **Schedule of Compliance Form** as **ATTACHMENT F**. |
| **27. Control Devices** |
| For each control device listed in the **Title V Equipment Table**, fill out and provide an **Air Pollution Control Device Form** as **ATTACHMENT G**. |
| For any control device that is required on an emission unit in order to meet a standard or limitation for which the potential pre-control device emissions of an applicable regulated air pollutant is greater than or equal to the Title V Major Source Threshold Level, refer to the **Compliance Assurance Monitoring (CAM) Form(s)** for CAM applicability. Fill out and provide these forms, if applicable, for each Pollutant Specific Emission Unit (PSEU) as **ATTACHMENT H**. |

*Section 6: Certification of Information*

**28. Certification of Truth, Accuracy and Completeness and Certification of Compliance**

*Note: This Certification must be signed by a responsible official. The **original**, signed in **blue ink**, must be submitted with the application. Applications without an **original** signed certification will be considered as incomplete.*

**a. Certification of Truth, Accuracy and Completeness**

I certify that I am a responsible official (as defined at 45CSR§30-2.38) and am accordingly authorized to make this submission on behalf of the owners or operators of the source described in this document and its attachments. I certify under penalty of law that I have personally examined and am familiar with the statements and information submitted in this document and all its attachments. Based on my inquiry of those individuals with primary responsibility for obtaining the information, I certify that the statements and information are to the best of my knowledge and belief true, accurate, and complete. I am aware that there are significant penalties for submitting false statements and information or omitting required statements and information, including the possibility of fine and/or imprisonment.

**b. Compliance Certification**

Except for requirements identified in the Title V Application for which compliance is not achieved, I, the undersigned hereby certify that, based on information and belief formed after reasonable inquiry, all air contaminant sources identified in this application are in compliance with all applicable requirements.

**Responsible official (type or print)**

| Name: Ronald Shumaker | Title: Mgr. Engineering & Env. Control |
|---|---|

**Responsible official's signature:**

Signature: _____ Signature Date: _____

(Must be signed and dated in blue ink)

**Note: Please check all applicable attachments included with this permit application:**

| | |
|---|---|
| ☒ | ATTACHMENT A: Area Map |
| ☒ | ATTACHMENT B: Plot Plan(s) |
| ☒ | ATTACHMENT C: Process Flow Diagram(s) |
| ☒ | ATTACHMENT D: Equipment Table |
| ☒ | ATTACHMENT E: Emission Unit Form(s) |
| ☐ | ATTACHMENT F: Schedule of Compliance Form(s) |
| ☒ | ATTACHMENT G: Air Pollution Control Device Form(s) |
| ☒ | ATTACHMENT H: Compliance Assurance Monitoring (CAM) Form(s) |

***All of the required forms and additional information can be found and downloaded from, the DEP website at www.wvdep.org/daq, requested by phone (304) 926-0475, and/or obtained through the mail.***

# ATTACHMENT A

## Area Map

(Reserved)

Attachment A - Area Map

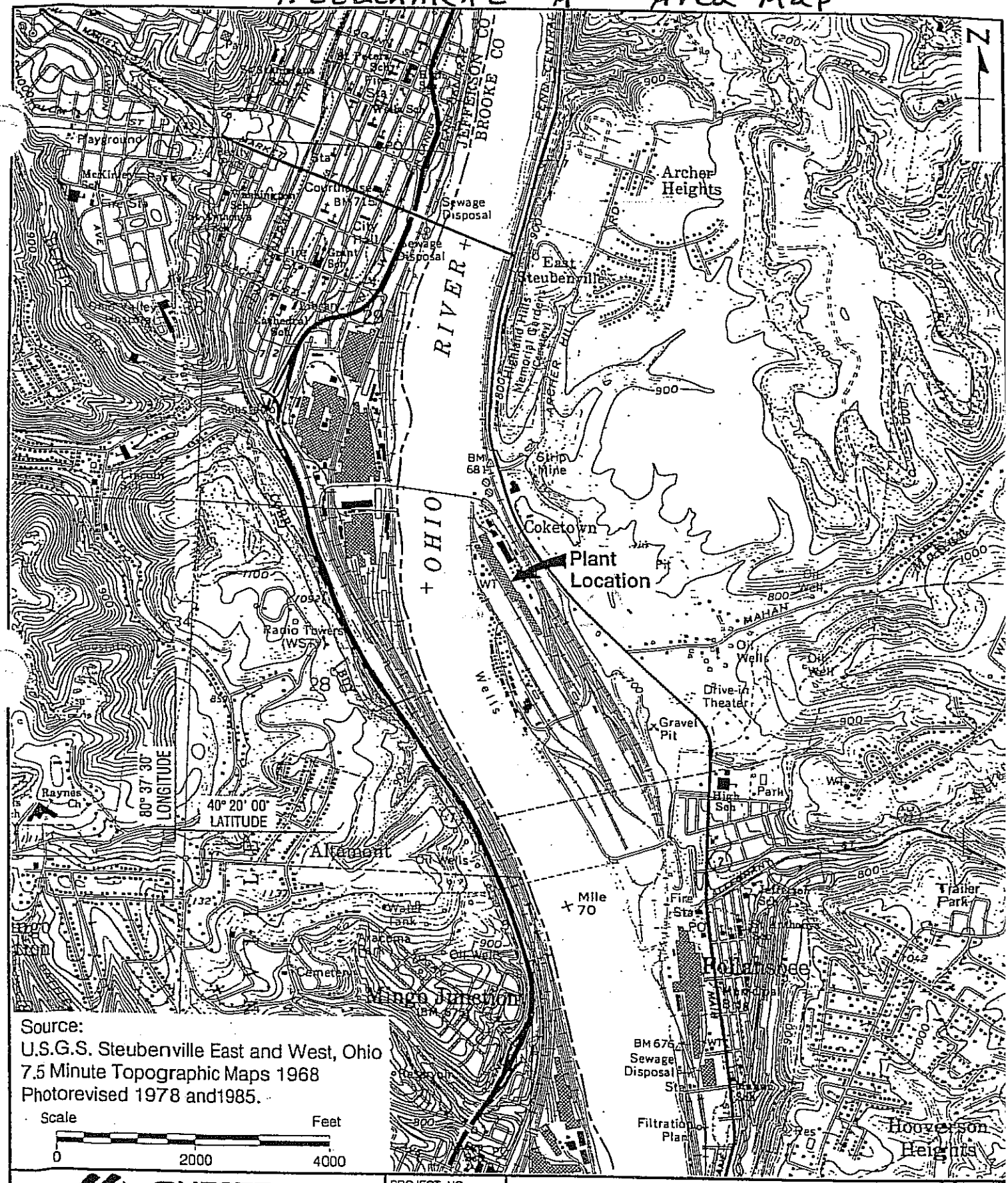


Source:
U.S.G.S. Steubenville East and West, Ohio
7.5 Minute Topographic Maps 1968
Photorevised 1978 and1985.

CHESTER ENGINEERS

| DWN BY: JS | CHK'D BY: RT | SCALE As Shown |
|---|---|---|
| APPR BY: | DATE 8/23/96 | FILE NAME |

PROJECT NO.: 5270-64-02
FIGURE NO.:

**Severstal Wheeling, Inc.**
Follansbee Plant
Facility ID: 03540090002
Site Location Map

(Reserved)

# ATTACHMENT B

## Plot Plan

(Reserved)

File=Follansbee Coke Plant Layout Diagram PLD1-R2
22-Mar-06

MOUNTAIN STATE CARBON

# Follansbee Coke Plant

## Plant Layout and Scale Locations

NOTE:

For Material Handling See The Following:
- Coal Process Flow Diagram – CoalPFD
- Coke Process Flow Diagram – CokePFD

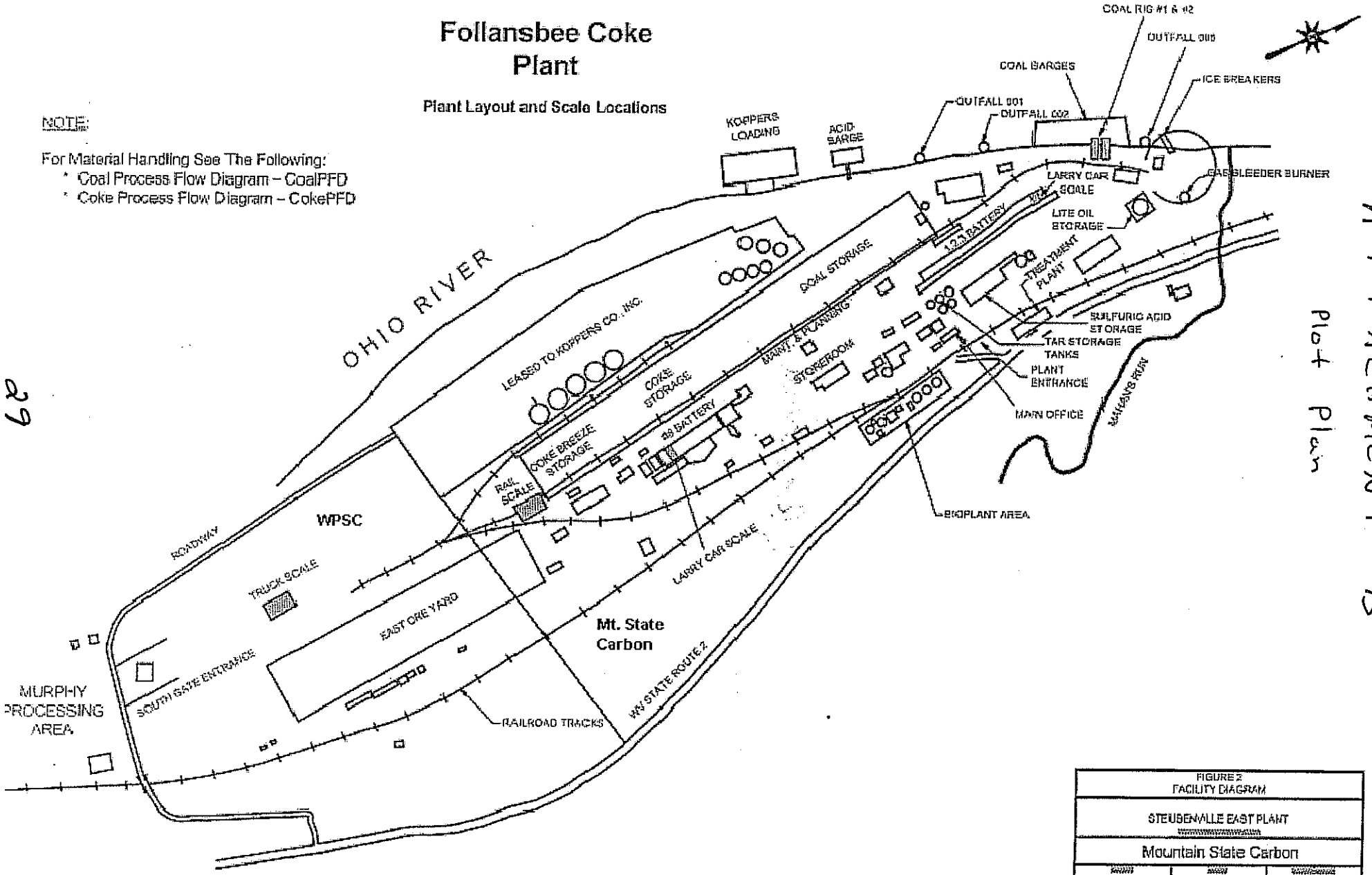


Plant Layout Diagram 1

| FIGURE 2 FACILITY DIAGRAM | | |
|---|---|---|
| STEUBENVILLE EAST PLANT | | |
| Mountain State Carbon | | |
| NOT TO SCALE | [illegible] | |
| REV 22-Mar-06 | DFD | DAD |

ATTACHMENT B
Plot Plan

29

(Reserved)

# ATTACHMENT C

## Process Flow Diagrams

(Reserved)

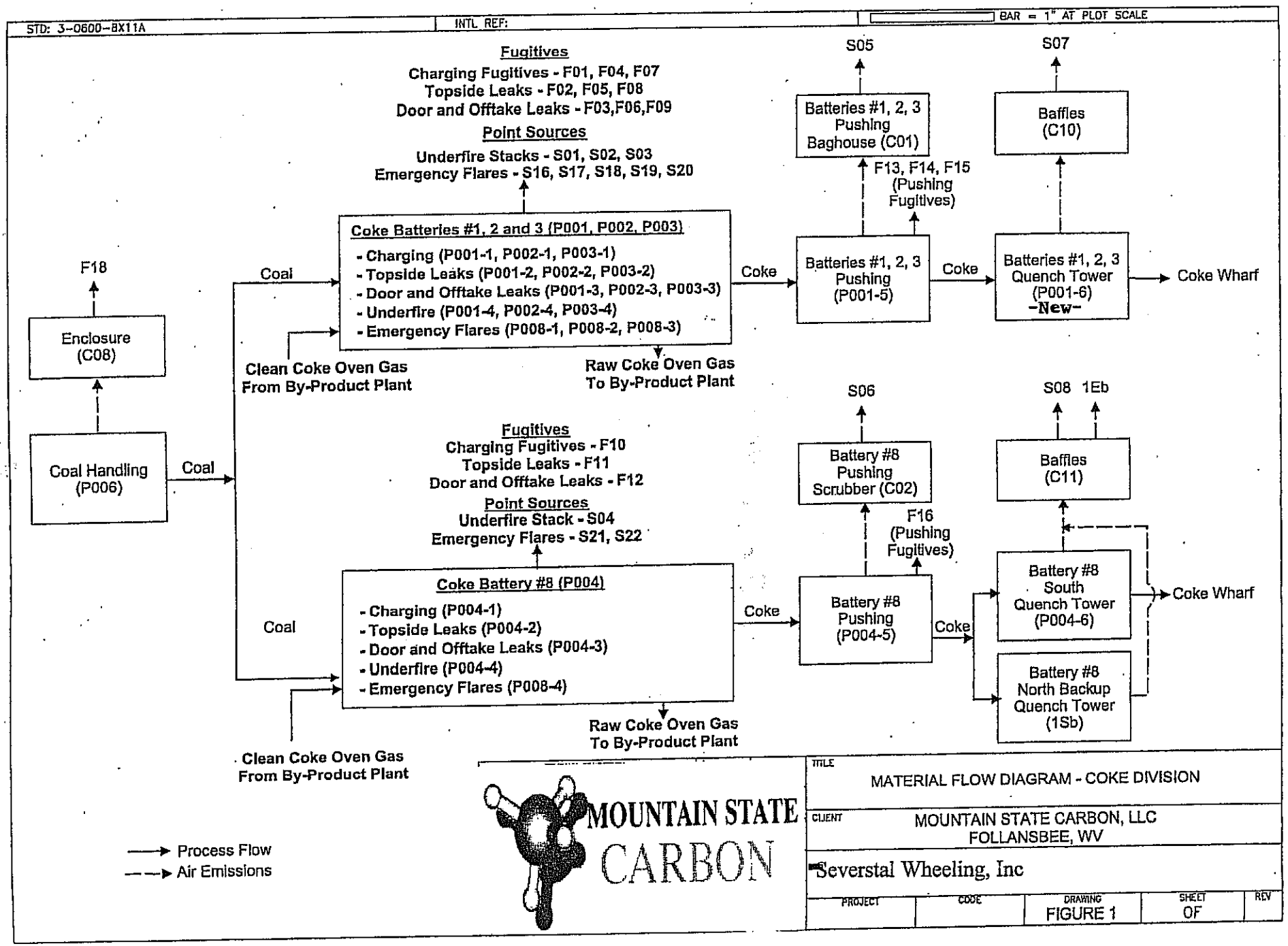


ATTACHMENT C - Process Flow Diagrams

(Reserved)

STD: 3-0600-8X11A | INTL REF: | BAR = 1" AT PLOT SCALE

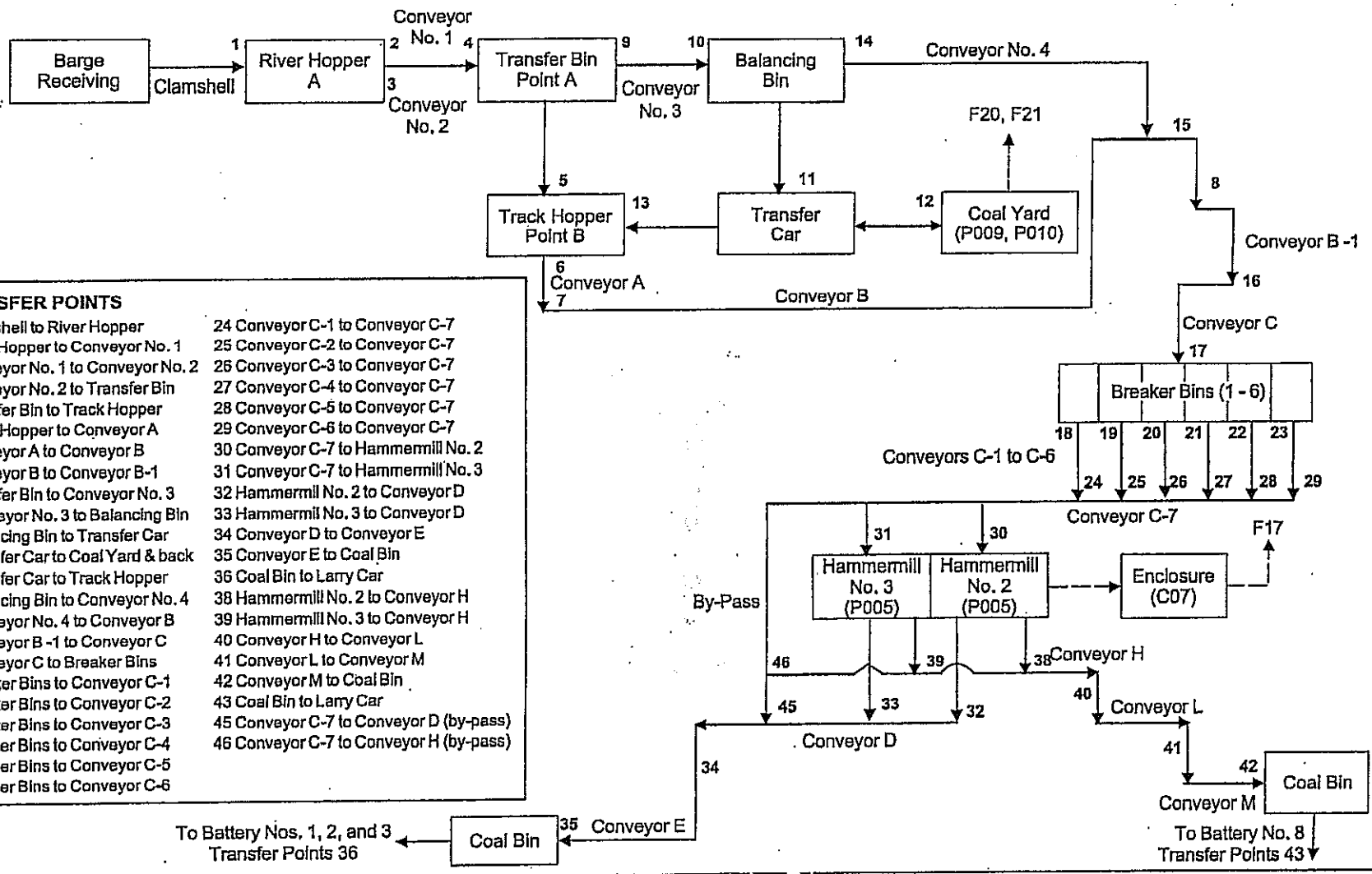


**TRANSFER POINTS**

1 Clamshell to River Hopper
2 River Hopper to Conveyor No. 1
3 Conveyor No. 1 to Conveyor No. 2
4 Conveyor No. 2 to Transfer Bin
5 Transfer Bin to Track Hopper
6 Track Hopper to Conveyor A
7 Conveyor A to Conveyor B
8 Conveyor B to Conveyor B-1
9 Transfer Bin to Conveyor No. 3
10 Conveyor No. 3 to Balancing Bin
11 Balancing Bin to Transfer Car
12 Transfer Car to Coal Yard & back
13 Transfer Car to Track Hopper
14 Balancing Bin to Conveyor No. 4
15 Conveyor No. 4 to Conveyor B
16 Conveyor B -1 to Conveyor C
17 Conveyor C to Breaker Bins
18 Breaker Bins to Conveyor C-1
19 Breaker Bins to Conveyor C-2
20 Breaker Bins to Conveyor C-3
21 Breaker Bins to Conveyor C-4
22 Breaker Bins to Conveyor C-5
23 Breaker Bins to Conveyor C-6
24 Conveyor C-1 to Conveyor C-7
25 Conveyor C-2 to Conveyor C-7
26 Conveyor C-3 to Conveyor C-7
27 Conveyor C-4 to Conveyor C-7
28 Conveyor C-5 to Conveyor C-7
29 Conveyor C-6 to Conveyor C-7
30 Conveyor C-7 to Hammermill No. 2
31 Conveyor C-7 to Hammermill No. 3
32 Hammermill No. 2 to Conveyor D
33 Hammermill No. 3 to Conveyor D
34 Conveyor D to Conveyor E
35 Conveyor E to Coal Bin
36 Coal Bin to Larry Car
38 Hammermill No. 2 to Conveyor H
39 Hammermill No. 3 to Conveyor H
40 Conveyor H to Conveyor L
41 Conveyor L to Conveyor M
42 Conveyor M to Coal Bin
43 Coal Bin to Larry Car
45 Conveyor C-7 to Conveyor D (by-pass)
46 Conveyor C-7 to Conveyor H (by-pass)

→ Process Flow
⇢ Air Emissions

MOUNTAIN STATE CARBON

| | |
|---|---|
| TITLE | COAL HANDLING AND CRUSHING PROCESS FLOW DIAGRAM |
| CLIENT | MOUNTAIN STATE CARBON, LLC FOLLANSBEE, WV |
| | Severstal Wheeling, Inc |
| PROJECT / CODE / DRAWING / SHEET / REV | DRAWING: FIGURE 2; SHEET: OF |

ATTACHMENT C (continued)

35

(Reserved)

STD: 3-0600-8X11A | INTL REF: | BAR = 1" AT PLOT SCALE

**BY-PRODUCT PLANT**

**Process Tanks**
- (3) Tar bottom final coolers (P021-1)
- Tar intercepting sump (P021-2)
- (2) Tar storage (P021-3)
- Light oil condenser (P021-4)
- Light oil sump (P021-5)
- Primary light oil separator (P021-6)
- Secondary light oil separator (P021-7)
- Light oil receiving/pump tanks (P021-8)
- Light oil running tank (P021-9)
- Light oil storage tank (P021-10)
- Wash oil decanter (P021-11)
- Wash oil circulating tank (P021-12)
- Wash oil muck tank (P021-13)
- Fresh wash oil storage tank (P021-14)
- (2) Excess ammonia liquor tanks (P021-15)
- (5) Tar decanter tanks (P021-16)
- Mother liquor tank (P021-17)
- Flushing liquor circulating tank (P021-18)

**Non-Contact Cooling Towers**
- Wet surface air coolers
- Light oil cooling tower
- (5) Cooling towers

**Closed Systems**
- Desulfurization boiler
- Reaction chamber
- Deacifiers
- Converter
- Drying tower
- Mist precipitator
- Acid coolers
- Acid cooler sump
- Primary coolers
- Saturators
- Detarrers
- Acid separator
- Rectifier building
- Benzol washers
- Wash oil coolers
- Still tank
- Gas holder

**Other Sources**
- Light oil loading (P021-21, F30)
- Tar loading station (P021-22, F34)

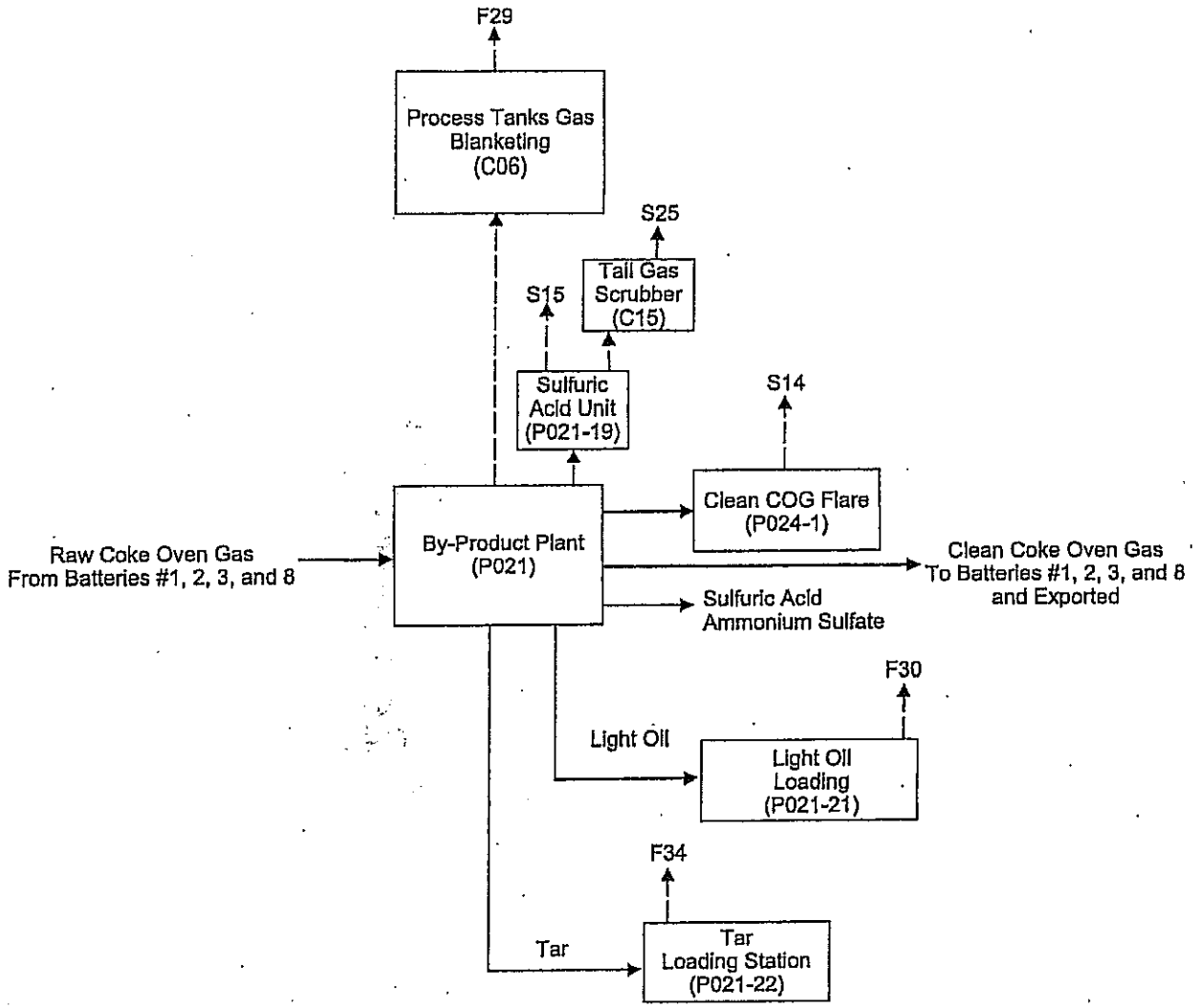


→ Process Flow
⇢ Air Emissions

MOUNTAIN STATE CARBON

| | |
|---|---|
| TITLE | BY-PRODUCTS PLANT |
| CLIENT | MOUNTAIN STATE CARBON, LLC FOLLANSBEE, WV |
| | Severstal Wheeling, Inc |

| PROJECT | CODE | DRAWING | SHEET | REV |
|---|---|---|---|---|
| | | FIGURE 3 | OF | |

ATTACHMENT C (continued)

(Reserved)

ATTACHMENT C (continued)

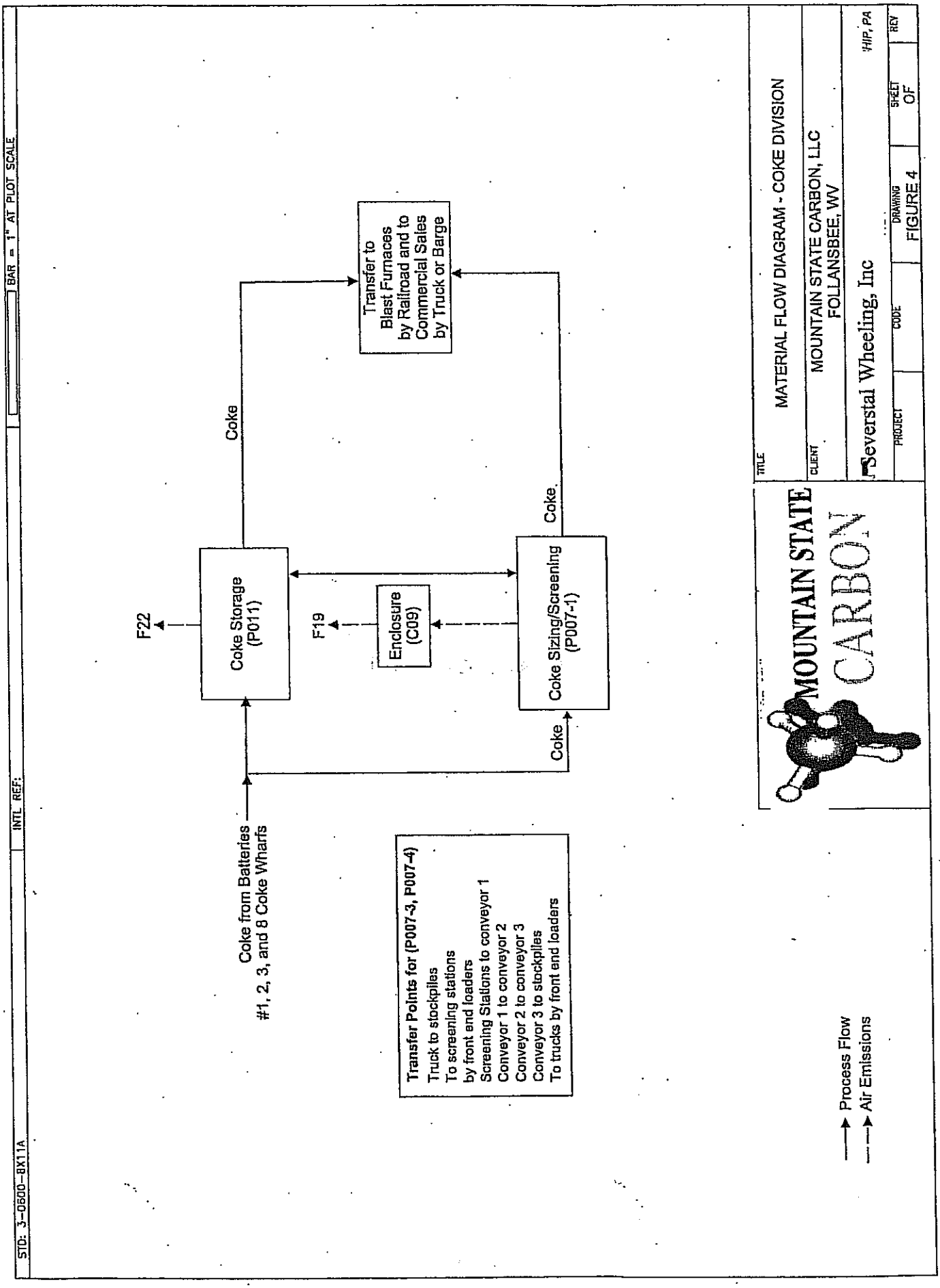

(Reserved)

ATTACHMENT C (continued)

47

STD: 3-0600-8X11A | INTL REF: | BAR = 1" AT PLOT SCALE

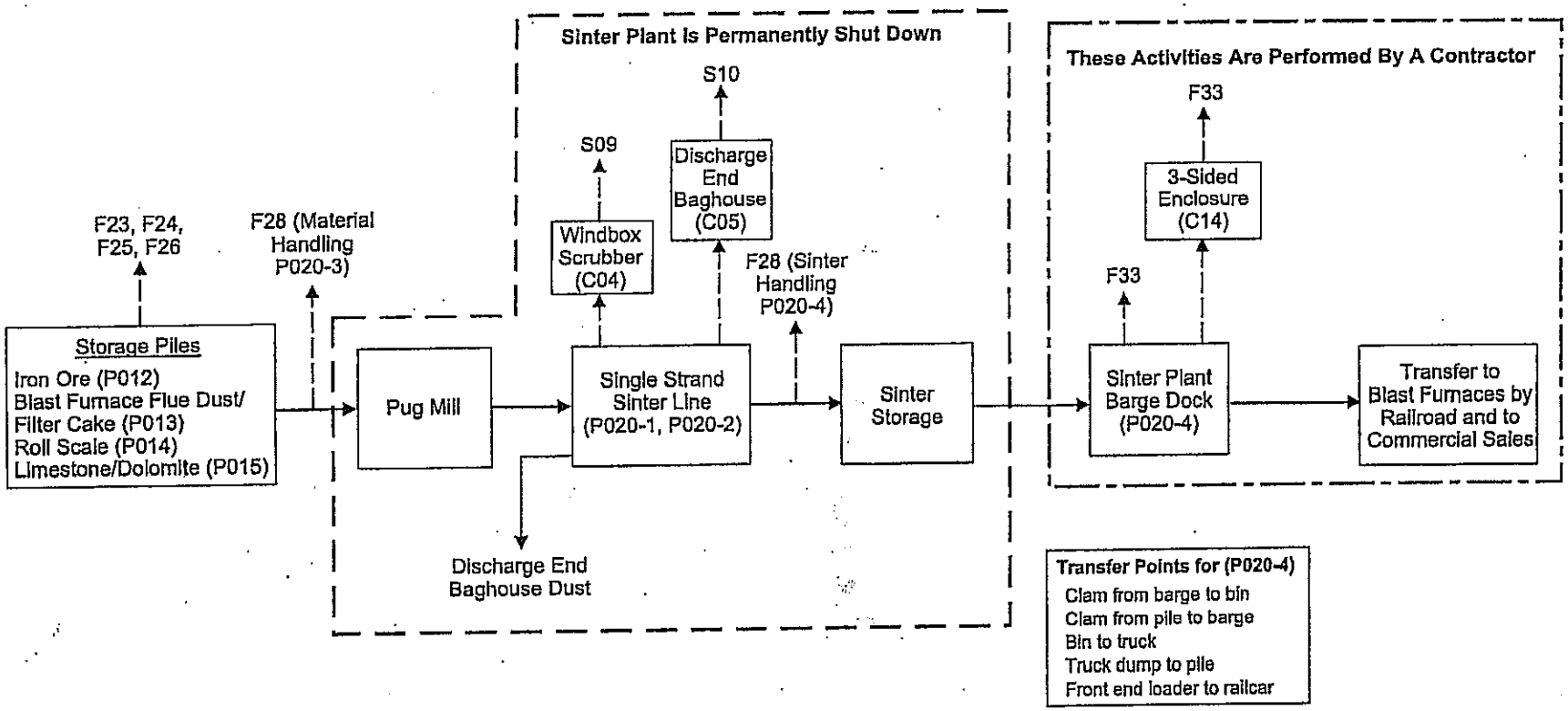


→ Process Flow
⟶ Air Emissions

MOUNTAIN STATE CARBON

TITLE: MATERIAL FLOW DIAGRAM - SINTER DIVISION

CLIENT: MOUNTAIN STATE CARBON, LLC
FOLLANSBEE, WV

Severstal Wheeling, Inc — WHIP, PA

| PROJECT | CODE | DRAWING | SHEET | REV |
|---|---|---|---|---|
| | | FIGURE 5 | OF | |

(Reserved)

STD: 3-0600-8X11A | INTL REF: | BAR = 1" AT PLOT SCALE

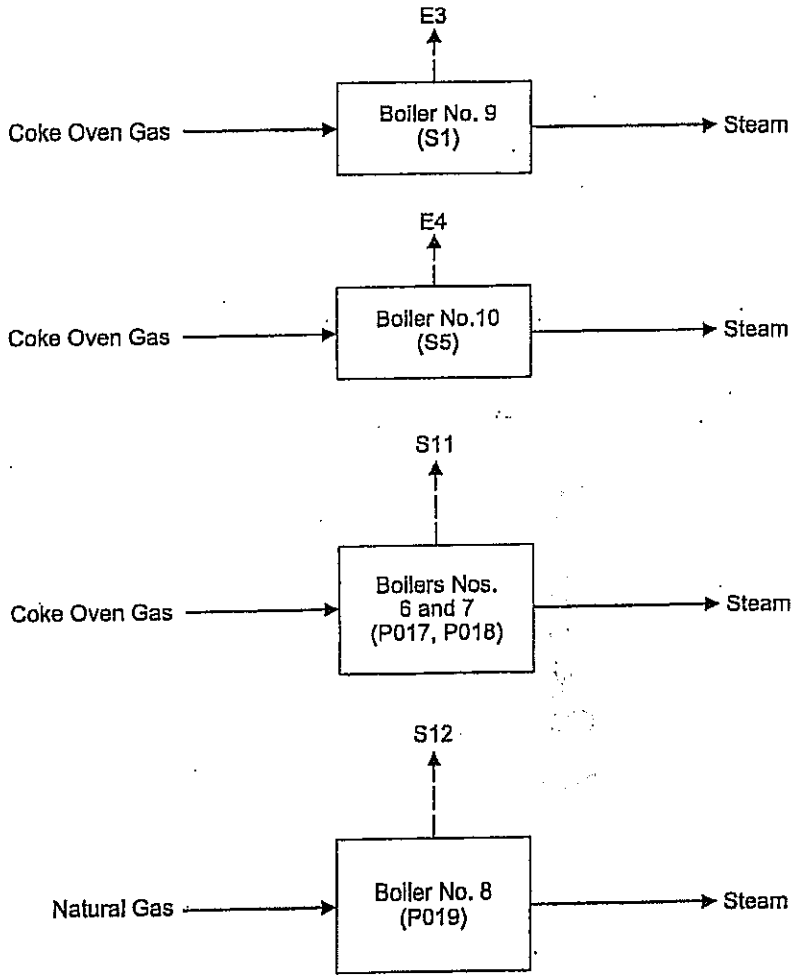


→ Process Flow
⇢ Air Emissions

MOUNTAIN STATE CARBON

TITLE: MATERIAL FLOW DIAGRAM - UTILITIES

CLIENT: MOUNTAIN STATE CARBON, LLC
FOLLANSBEE, WV

Severstal Wheeling, Inc — SHIP, PA

| PROJECT | CODE | DRAWING | SHEET | REV |
|---|---|---|---|---|
| | | FIGURE 6 | OF | |

ATTACHMENT C (continued)

34

(Reserved)

STD: 3-0600-8X11A | INTL REF: | BAR = 1" AT PLOT SCALE

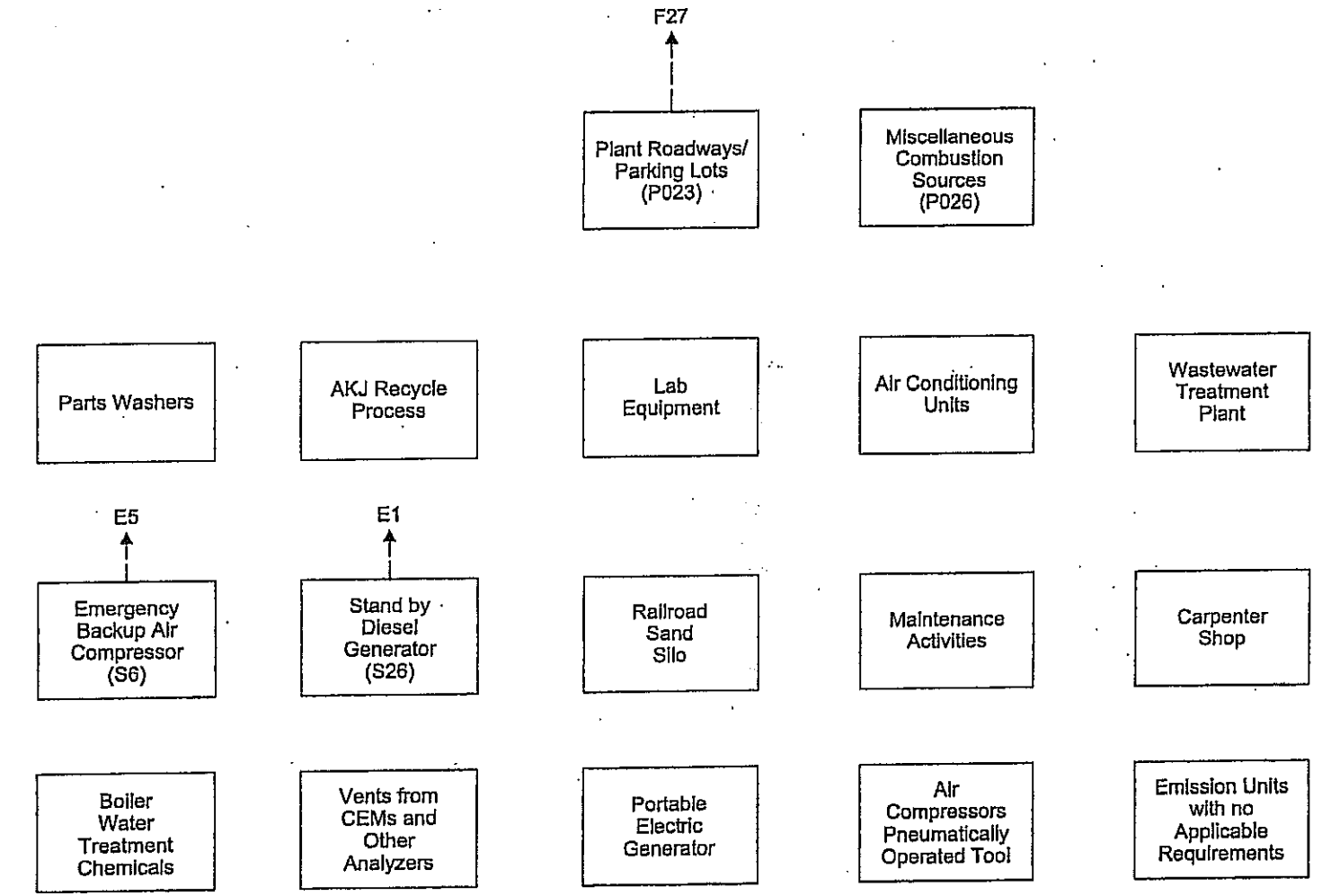


→ Process Flow
⇢ Air Emissions

MOUNTAIN STATE CARBON

TITLE: MISCELLANEOUS SOURCES

CLIENT: MOUNTAIN STATE CARBON, LLC
FOLLANSBEE, WV

Severstal Wheeling, Inc

| PROJECT | CODE | DRAWING | SHEET | REV |
|---|---|---|---|---|
| | | FIGURE 7 | OF | |

ATTACHMENT C (continued)

54

(Reserved)

# ATTACHMENT D

## Emission Unit Table

(Reserved)

## ATTACHMENT D - Emission Units Table

**(includes all emission units at the facility except those designated as insignificant activities in Section 4, Item 24 of the General Forms)**

| Emission Unit ID[1] | Emission Point ID[1] | Emission Unit Description | Year Installed/ Modified | Design Capacity | Control Device[1] |
|---|---|---|---|---|---|
| **Battery** | **#1** | **Group 001** | | | |
| P001-1 | F01 | Charging on Battery #1 | 1917/1954 | 31.60 tons coal /hr and 227,000 tons coal/year | None |
| P001-2 | F02 | Topside Leaks from Battery #1 | 1917/1954 | NA | None |
| P001-3 | F03 | Door and Offtake Leaks from Battery #1 | 1917/1954 | NA | None |
| P001-4 | Stack 01 | Underfire Stack for Battery #1 | 1917/1954 | 31.6 tons coal/hr 22.1 tons coke/hr | None |
| P001-5 | Stack 05, F13, F14, F15 | Pushing from Coke Oven Batteries #1, #2, and #3 (F13, F14, and F15). | 1917/1954 | 97.2 tons coal/hr 68.1 tons coke/hr | Shed OBSC and Baghouse C01 |
| OBSC (control device) | OBSC | Shed | 1982 | NA | Baghouse C01 |
| C01 (control device) | Stack 05 | Batteries #1, #2, and #3 Pushing Baghouse | 1982 | 300,000 cfm at 125 degrees F | NA |
| P001-6 | Stack 07 | Quenching for Batteries #1, #2, and #3 | 1917/1954 | 68.1 tons coke per hour | C10 |
| C10 (control device) | Stack 07 | Batteries #1, #2, and #3 Quenching Baffle | 1917/1954 | 68.1 tons coke per hour | Baffles |
| P008-1 | Stack S16, S17 | Emergency Flares for Battery # 1 | 1994 | 314,000 scfm (total COG flow) | None |
| P008-2 | Stack S18, S19, | Emergency Flares for Battery # 2 | 1994 | 314,000 scfm (total COG flow) | None |
| P008-3 | Stack S20 | Emergency Flares for Battery # 3 | 1994 | 314,000 scfm (total GOG flow) | None |

| | | | | | |
|---|---|---|---|---|---|
| **Battery** | **#2** | **Group 002** | | | |
| P002-1 | F04 | Charging on Battery # 2 | 1917 and 1953 | 31.60 tons coal /hr and 227,000 tons coal/year | None |
| P002-2 | F05 | Topside Leaks from Battery # 2 | 1917 and 1953 | NA | None |
| P002-3 | F06 | Door and Offtake Leaks from Battery # 2 | 1917 and 1953 | NA | None |
| P002-4 | Stack 02 | Underfire Stack for Battery # 2 | 1917 and 1953 | 31.6 tons coal/hr 22.1 tons coke/hr | None |
| **Battery** | **#3** | **Group 003** | | | |
| P003-1 | F07 | Charging on Battery # 3 | 1917 and 1953 | 34.0 tons coal /hr and 298,000 tons coal/year | None |
| P003-2 | F08 | Topside Leaks from Battery # 3 | 1917 and 1953 | NA | None |
| P003-3 | F09 | Door and Offtake Leaks from Battery # 3 | 1917 and 1953 | NA | None |
| P003-4 | Stack 03 | Underfire Stack for Battery # 3 | 1917 and 1953 | 34 tons coal/hr 23.8 tons coke/hr | None |
| **Battery** | **#8** | **Group 004** | | | |
| P004-1 | F10 | Charging on Battery # 8 | 1976 | 152.6 tons coal /hr and 1,336,776 tons coal/year | None |
| P004-2 | F11 | Topside Leaks from Battery # 8 | 1976 | NA | None |
| P004-3 | F12 | Door and Offtake Leaks from Battery # 8 | 1976 | NA | None |
| P004-4 | Stack 04 | Underfire Stack for Battery # 8 | 1976 | 152.6 tons coal/hr 106.8 tons coke/hr | None |
| P004-5 | Stack 06, F16 | Pushing from Battery # 8 | 1976 | 152.6 tons coal/hr 106.8 tons coke/hr | Mobile Hood 8CS and Scrubber CO2 |
| 8CS (control device) | 8CS | Mobile Hood | 1976 | NA | Scrubber CO2 |

| | | | | | |
|---|---|---|---|---|---|
| C02 (control device) | Stack 06 | Battery # 8 Pushing Venturi Scrubber | 1976 | 470,000 cfm | NA |
| P004-6 | Stack 08a | Quenching for Battery # 8 (South quench tower) | 1976 | 152.6 tons coal/hr and 106.8 tons coke/hr | Baffles C11a |
| C11a (control device) | Stack 08a | Batteries # 8 Quenching Tower Baffles (South quench tower) | 1976 | 175 tons coke/hr | NA |
| P004-7 | Stack 08b | Quenching for Battery # 8 (North quench tower) | 2005 | 175 tons coke/hr | Baffles C11b |
| C11b (control device) | Stack 08b | Battery # 8 Quenching Baffles (North quench tower) | 2005 | 175 tons coke/hr | NA |
| P008-4 | Stack 21, 22 | Emergency Flares for Battery # 8 | 1994 | 1,660,300 scfm (total COG flow) | None |
| **Boilers** | **Group** | **005** | | | |
| P017 | Stack 11 | Boiler # 6 | 1951/2004 | 90 MMBtu/hr coke oven gas | None |
| P018 | Stack 11 | Boiler # 7 | 1951/2004 | 90 MMBtu/hr coke oven gas | None |
| P019 | Stack 12 | Boiler # 8 | 1976/2004 | 85 MMBtu/hr Natural gas | None |
| S1 | E3 | Boiler # 9 | 2004 | 98 MMBtu/hr coke oven gas | None |
| S5 | E4 | Boiler # 10 | 2004 | 98 MMBtu/hr | None |
| **Coal/** | **Coke** | **Handling Group 006** | | | |
| P005 | C07, F17 | Coal Crushing | 1917 and 1948 | 500 tons coal/hr and 4,380,000 tons coal/yr | None |
| **Coal** | **Handli** | **ng Group 006** | | | |
| P006 | C08, F18 | Coal Handling | 1917, 1948, and 1976 | 500 tons coal/hr and 4,380,000 tons coal/yr | None |
| 1 | F18 | Barge Receiving | 1917, 1948, and 1976 | 500 tons coal/hr | None |
| 1A | F18 | Clamshell | 1917, 1948, and 1976 | 500 tons coal/hr | None |

| | | | | | |
|---|---|---|---|---|---|
| 2 | F18 | River Hopper A | 1917, 1948, and 1976 | 500 tons coal/hr | None |
| Conv. 1 | F18 | Conveyor No. 1 | 1917, 1948, and 1976 | 500 tons coal/hr | None |
| Conv. 2 | F18 | Conveyor No. 2 | 1917, 1948, and 1976 | 500 tons coal/hr | None |
| 4 | F18 | Transfer Bin (Point A) | 1917, 1948, and 1976 | 500 tons coal/hr | None |
| 5 | F18 | Track Hopper (Point B) | 1917, 1948, and 1976 | 500 tons coal/hr | None |
| Conv. A | F18 | Conveyor A | 1917, 1948, and 1976 | 500 tons coal/hr | None |
| Conv. B | F18 | Conveyor B | 1917, 1948, and 1976 | 500 tons coal/hr | None |
| Conv. B-1 | F18 | Conveyor B-1 | 1917, 1948, and 1976 | 500 tons coal/hr | None |
| Conv. 3 | F18 | Conveyor No. 3 | 1917, 1948, and 1976 | 500 tons coal/hr | None |
| 10 | F18 | Balancing Bin (BB) | 1917, 1948, and 1976 | 500 tons coal/hr | None |
| 11 | F18 | Transfer Car | 1917, 1948, and 1976 | 500 tons coal/hr | None |
| Conv. 4 | F18 | Conveyor No. 4 | 1917, 1948, and 1976 | 500 tons coal/hr | None |
| Conv. C | F18 | Conveyor C | 1917, 1948, and 1976 | 500 tons coal/hr | None |
| 18 | F18 | Breaker Bin 1 | 1917, 1948, and 1976 | 500 tons coal/hr | None |
| 19 | F18 | Breaker Bin 2 | 1917, 1948, and 1976 | 500 tons coal/hr | None |
| 20 | F18 | Breaker Bin 3 | 1917, 1948, and 1976 | 500 tons coal/hr | None |
| 21 | F18 | Breaker Bin 4 | 1917, 1948, and 1976 | 500 tons coal/hr | None |
| 22 | F18 | Breaker Bin 5 | 1917, 1948, and 1976 | 500 tons coal/hr | None |
| 23 | F18 | Breaker Bin 6 | 1917, 1948, and 1976 | 500 tons coal/hr | None |
| C-1 | F18 | Conveyor C-1 | 1917, 1948, and 1976 | 500 tons coal/hr | None |

| | | | | | |
|---|---|---|---|---|---|
| C-2 | F18 | Conveyor C-2 | 1917, 1948, and 1976 | 500 tons coal/hr | None |
| C-3 | F18 | Conveyor C-3 | 1917, 1948, and 1976 | 500 tons coal/hr | None |
| C-4 | F18 | Conveyor C-4 | 1917, 1948, and 1976 | 500 tons coal/hr | None |
| C-5 | F18 | Conveyor C-5 | 1917, 1948, and 1976 | 500 tons coal/hr | None |
| C-6 | F18 | Conveyor C-6 | 1917, 1948, and 1976 | 500 tons coal/hr | None |
| C-7 | F18 | Conveyor C-7 | 1917, 1948, and 1976 | 500 tons coal/hr | None |
| Conv. D | F18 | Conveyor D | 1917, 1948, and 1976 | 500 tons coal/hr | None |
| Conv. E | F18 | Conveyor E | 1917, 1948, and 1976 | 500 tons coal/hr | None |
| 35 | F18 | Coal Bin Unloading to Larry Car | 1917, 1948, and 1976 | 500 tons coal/hr | None |
| 36 | F18 | Larry Cars (Unloading to Batteries # 1, 2, and 3 (37)) | 1917, 1948, and 1976 | 97.2 tons/hr | None |
| Conv. H | F18 | Conveyor H | 1976 | 152.6 tons/hr | None |
| Conv. L | F18 | Conveyor L | 1976 | 152.6 tons/hr | None |
| Conv. M | F18 | Conveyor M | 1976 | 152.6 tons/hr | None |
| 42 | F18 | Coal Bin | 1976 | 152.6 tons/hr | None |
| 43 | F18 | Larry Cars (Unloading to Battery # 8 (44)) | 1976 | 152.6 tons/hr | None |
| P007-1 | C09, F19 | Coke Sizing and Screening | 1917 and 1976 | 330 tons/hr | C09 |
| **Storage** | **Piles** | **Group 006** | | | |
| P009 | F20 | Coal Storage Piles | 1917 | NA | None |
| P010 | F21 | Coal Storage Piles | 1917 | NA | None |
| P011 | F22 | Coke Storage Piles | 1917 | NA | None |
| **Plant** | **Roads/** | **Parking Group 007** | | | |
| P023 | F27 | Unpaved Roads and Parking Lots | 1917 | NA | DSCS and Sweeping |

| | | | | | |
|---|---|---|---|---|---|
| | | Paved Roads | 1999 | NA | Flushing and Vacuum Sweeping |
| **Residual** | **Material** | **al Storage Yard** | **Group** | **008** | |
| P012 | F23 | Iron Ore Storage Piles | 1944 | NA | None |
| P013 | F24 | Blast Furnace Flue Dust Filter Cake Storage Piles | 1944 | NA | None |
| P014 | F25 | Roll Scale | 1944 | NA | None |
| P015 | F26 | Limestone / Dolomite | 1944 | NA | None |
| P020-3 | F28 | Material Handling of Raw Materials | 1944 | NA | None |
| **Sinter** | **Plant** | **Barge Dock (contractor)** | **Group** | **008** | |
| P020-4 | F33 | Sinter Plant Barge Dock Operations | 1942 | 500 tons/hr | C14 |
| **By-Prod** | **uct** | **Plant Group 009** | | | |
| P021 | F29 | By-Products Plant | 1978 | 80 MMCF/day coke oven gas | None |
| **Process** | **Tanks** | **On By-Products Plant** | **Group** | **009** | |
| P021-1 | C06, F29 | Tar Bottom Final Coolers Number 1 | 1990/1991 | 400 gals | None |
| P021-1 | C06, F29 | Tar Bottom Final Coolers Number 2 | 1990/1991 | 400 gals | None |
| P021-1 | C06, F29 | Tar Bottom Final Coolers Number 3 | 1990/1991 | 400 gals | None |
| P021-2 | C06, F29 | Tar Intercepting Sump | 1990/1991 | 12,000 | None |
| P021-3 | C06, F29 | Tar Storage Number 1 | 1990/1991 | 240,000 gals | None |
| P021-3 | C06, F29 | Tar Storage Number 2 | 1990/1991 | 240,000 gals | None |
| P021-4 | C06, F29 | Light Oil Condenser | 1995/1996/ 2000 | Vapor Condenser | None |
| P021-5 | C06, F29 | Light Oil Sump | 1990/1991 | 40,000 gals | None |
| P021-6 | C06, F29 | Primary Light Oil Separator | 1990/1991 | 3,000 gals | None |
| P021-7 | C06, F29 | Secondary Light Oil Separator | 1990/1991 | 350 gals | None |
| P021-8 | C06, F29 | Light Oil Receiving Pump Tanks | 1990/1991 | 350 gals | None |
| P021-9 | C06, F29 | Light Oil Running Tank | 1990/1991 | 15,000 gals | None |
| P021-10 | C06, F29 | Light Oil Storage Tank | 1990/1991 | 600,000 gals | None |
| P021-11 | C06, F29 | Wash Oil Decanter | 1990/1991 | 20,000 | None |

| | | | | | |
|---|---|---|---|---|---|
| P021-12 | C06, F29 | Wash Oil Circulating Tank | 1990/1991 | 20,000 | None |
| P021-13 | C06, F29 | Wash Oil Muck Tank | 1990/1991 | 20,000 | None |
| P021-14 | C06, F29 | Fresh Wash Oil Storage Tank | 1990/1991 | 20,000 | None |
| P021-15 | C06, F29 | Excess Ammonia Liquor Tanks (2) | 1991/1991 | 400,000 | None |
| P021-16 | C06, F29 | Tar Decanter Tanks (5) | 1990/1991 | 40,000/50,000 | None |
| P021-17 | C06, F29 | Mother Liquor Tank | 1970 and 1975 | 20,000 | None |
| P021-18 | C06, F29 | Flushing Liquor Circulating Tank | 1991/1991 | 20,000 | None |
| P021-19 | Stack 15 | Sulfuric Acid Plant Tail Gas Stack | 1978 | 50 tons 100% H2SO4/day | C15 |
| C15 (control device) | Stack 15 | Tail Gas Scrubber | 2005 | 7,000 acfm | NA |
| P021-21 | F30 | Light Oil Loading | 1991/1991 | 4,700,000 gal/yr | None |
| P021-22 | P34 | Coal Tar Loading Station | 1993 | 550 gpm | None |
| P024-1 | Stack 14 | Excess Oven Coke Gas (COG) Flare | 1995 | 460 MMBtu/hr | None |
| **Non-** | **Contac** | **t Cooling Towers** | **Group** | **009** | |
| | | Wet Surface Air Coolers | 1978 | Coke Oven Gas @ 80 mmcf/d | Sealed |
| | | Light Oil Cooling Tower | 1978 | Coke Oven Gas @ 80 mmcf/d | Sealed |
| | | (5) Cooling Tower | 1978 | Coke Oven Gas @ 80 mmcf/d | Sealed |
| **Closed** | **Syste** | **ms that Convert H2S to** | **Sulf. Acid** | **Group** | **009** |
| | | Desulfurization Boiler | 1978 | Coke Oven Gas @ 80 mmcf/d | Sealed |
| | | Reaction Chamber | 1978 | Coke Oven Gas @ 80 mmcf/d | Sealed |
| | | Deacifiers | 1978 | Coke Oven Gas @ 80 mmcf/d | Sealed |
| | | Converter | 1978 | Coke Oven Gas @ 80 mmcf/d | Sealed |
| | | Drying Tower | 1978 | Coke Oven Gas @ 80 mmcf/d | Sealed |
| | | Mist Precipitator | 1978 | Coke Oven Gas @ 80 mmcf/d | Sealed |

| | | | | | |
|---|---|---|---|---|---|
| | | Acid Coolers | 1978 | Coke Oven Gas @ 80 mmcf/d | Sealed |
| | | Acid Cooler Sump | 1978 | Coke Oven Gas @ 80 mmcf/d | Sealed |
| | | Primary Coolers | 1978 | Coke Oven Gas @ 80 mmcf/d | Sealed |
| | | Saturators | 1978 | Coke Oven Gas @ 80 mmcf/d | Sealed |
| | | Detarrers | 1978 | Coke Oven Gas @ 80 mmcf/d | Sealed |
| | | Acid Separators | 1978 | Coke Oven Gas @ 80 mmcf/d | Sealed |
| | | Rectifier Building | 1978 | Coke Oven Gas @ 80 mmcf/d | Sealed |
| | | Benzol Washers | 1978 | Coke Oven Gas @ 80 mmcf/d | Sealed |
| | | Wash Oil Coolers | 1978 | Coke Oven Gas @ 80 mmcf/d | Sealed |
| | | Still Tanks | 1978 | Coke Oven Gas @ 80 mmcf/d | Sealed |
| | | Gas Holder (Idle) | 1947 | 100,000 cf | Sealed |
| **Emerge** | **ncy** | **Equipment Group 010** | | | |
| E5 | S6 | Emergency Diesel Fired Air Compressor | 2005 | 527 hp | None |
| E1 | S26 | Standby Diesel Fired Emergency Generator | 2004 | 600 hp | None |
| **Misc.** | **Source** | **s Group 00A** | | | |
| | | Air Conditioning Units | NA | NA | |
| **Misc.** | **Combu** | **stion Sources Group** | **00B** | | |
| P026 | | Indirect Fired Combustion Units Throughout Plant | | < 10 MMBtu/hr | None |
| **Insignifi** | **cant** | **Activities Profile** | | | |
| NA | NA | Various insignificant emission activities throughout the Plant as identified in the Title V permit application | See Section 4-General Application Forms | | |
| | | | | | |

# ATTACHMENT E

## Emission Unit Forms

(Reserved)

# ATTACHMENT E - Emission Unit Form

***Emission Unit Description***

| **Emission unit ID number:** | **Emission unit name:** | **List any control devices associated with this emission unit:** OBSC, C01, and C10 |
|---|---|---|
| P001-1, P001-2, P001-3, P001-4, P001-5, P001-6 | Battery # 1 - Charging, Topside Leaks, Door and Offtake Leaks, Underfire Stack, Pushing (from #1, #2, and #3 batteries), and Quenching (from #1 #2, and #3 batteries). | |

**Provide a description of the emission unit (type, method of operation, design parameters, etc.):**
Coke battery #1 is a short (less than 6 meter) coke oven battery with 47 ovens. Each oven has four charging holes, two doors and one offtake. The underfiring of Battery #1 involves the combustion of clean coke oven gas which provides heat to the ovens for the coking process. The OBSC Shed and Baghouse C01 control P001-5 and Baghouse C10 controls P001-6.

P001-5 includes pushing from Batteries #1,#2, and #3. Pushing identifies the emissions generated by the pushing of coke out of batteries #1, #2, and #3 into a quench car after the coke process is complete. The maximum amount of coal charged per hour in batteries #1, #2, and #3 combined is 97.2 tons. Approximately 68.1 tons of coke per hour are produced from these three batteries.

P001-6 includes quenching from Batteries #1, #2, and #3. Quenching is a process used to keep coke from burning. The coke pushed from the battery ovens is very hot and will burn when it contacts oxygen in the air. The coke is sprayed with water in a quench tower to reduce its temperature below the ignition point.

| **Manufacturer:** | **Model number:** | **Serial number:** |
|---|---|---|
| Koppers | NA | NA |
| **Construction date:** | **Installation date:** | **Modification date(s):** |
| 01/01/1917 | 01/01/1917 | 01/01/1954 |

**Design Capacity (examples: furnaces - tons/hr, tanks - gallons):** 31.60 tons of coal charged/hour and 22.1 tons of coke/hour

| **Maximum Hourly Throughput:** | **Maximum Annual Throughput:** | **Maximum Operating Schedule:** |
|---|---|---|
| 31.60 tons of coal charged and 22.1 tons of coke/hour | 277,000 tons of coal charged | 8760 hours/year |

***Fuel Usage Data*** **(fill out all applicable fields)**

| **Does this emission unit combust fuel?** | **If yes, is it?** |
|---|---|
| _X_ Yes ___ No | _X_ Indirect Fired ___ Direct Fired |
| **Maximum design heat input and/or maximum horsepower rating:** 88 MMBtu/hr | **Type and Btu/hr rating of burners:** Multi-burners 58,200 Btu/hr |

**List the primary fuel type(s) and if applicable, the secondary fuel type(s). For each fuel type listed, provide the maximum hourly and annual fuel usage for each.**

The coke oven gas used in the underfiring process is supplied from the by-product plant at the facility.
COG – 160,000 CFH and 1,401,600 Mcf per year.
Mixed Gas – 160,000 CFH and 1,401,600 Mcf per year.

**Describe each fuel expected to be used during the term of the permit.**

| Fuel Type | Max. Sulfur Content | Max. Ash Content | BTU Value |
|---|---|---|---|
| Coke Oven Gas | 0.075% S | Neg | 489 btu/ft3 |
| | | | |
| | | | |
| | | | |

***Emissions Data***

| Criteria Pollutants | Potential Emissions | |
|---|---|---|
| | PPH | TPY |
| Carbon Monoxide (CO) | See previous applications | See previous applications |
| Nitrogen Oxides ($NO_X$) | See previous applications | See previous applications |
| Lead (Pb) | 0.00062 | 0.0027 |
| Particulate Matter ($PM_{2.5}$) | 3.1 | 13.5 |
| Particulate Matter ($PM_{10}$) | See previous applications | See previous applications |
| Total Particulate Matter (TSP) | See previous applications | See previous applications |
| Sulfur Dioxide ($SO_2$) | See previous applications | See previous applications |
| Volatile Organic Compounds (VOC) | See previous applications | See previous applications |

| Hazardous Air Pollutants | Potential Emissions | |
|---|---|---|
| | PPH | TPY |
| | See previous applications | See previous applications |
| | | |
| | | |
| | | |

| Regulated Pollutants other than Criteria and HAP | Potential Emissions | |
|---|---|---|
| | PPH | TPY |
| | | |
| | | |
| | | |

**List the method(s) used to calculate the potential emissions (include dates of any stack tests conducted, versions of software used, source and dates of emission factors, etc.).**
See previous applications, except for PM2.5 and lead are from new AP-42 (May 2008).

*Applicable Requirements*

**List all applicable requirements for this emission unit. For each applicable requirement, include the underlying rule/regulation citation and/or construction permit with the condition number. (*Note: Title V permit condition numbers alone are not the underlying applicable requirements*). If an emission limit is calculated based on the type of source and design capacity or if a standard is based on a design parameter, this information should also be included.**

Refer to Attachment J.

_x__ Permit Shield

**For all applicable requirements listed above, provide monitoring/testing/recordkeeping/reporting which shall be used to demonstrate compliance. If the method is based on a permit or rule, include the condition number or citation. (Note: Each requirement listed above must have an associated method of demonstrating compliance. If there is not already a required method in place, then a method must be proposed.)**

Refer to Attachment J.

**Are you in compliance with all applicable requirements for this emission unit?** _x_ Yes ___No

If no, complete the **Schedule of Compliance Form** as **ATTACHMENT F.**

(Reserved)

# ATTACHMENT E - Emission Unit Form

***Emission Unit Description***

| **Emission unit ID number:** | **Emission unit name:** | **List any control devices associated with this emission unit:** None |
|---|---|---|
| P008-1, P008-2, P008-3, and P008-4 | Emergency Flares – Battery #1, Battery #2, Battery #3, and Battery #8. | |

**Provide a description of the emission unit (type, method of operation, design parameters, etc.):**
Emergency flares for coke batteries #1, #2, #3, and #8.

| **Manufacturer:** | **Model number:** | **Serial number:** |
|---|---|---|
| Chem. Tech | NA | NA |
| **Construction date:** | **Installation date:** | **Modification date(s):** |
| 01/01/1994 | 01/01/1994 | 01/01/1994 |

**Design Capacity (examples: furnaces - tons/hr, tanks - gallons):** Batteries 1, 2, and 3 - 314,000 scfm (Each Battery). Battery 8 – 1,660,300 scfm (total)

| **Maximum Hourly Throughput:** | **Maximum Annual Throughput:** | **Maximum Operating Schedule:** |
|---|---|---|
| Batteries 1, 2, 3 – 18.84 MMscf/hr; Battery 8 – 99.62 MMscf/hr | Not Determined | 8760 hours/year |

***Fuel Usage Data*** **(fill out all applicable fields)**

| **Does this emission unit combust fuel?** _X_ Yes ___ No | **If yes, is it?** ___ Indirect Fired _X_ Direct Fired |
|---|---|
| **Maximum design heat input and/or maximum horsepower rating:** | **Type and Btu/hr rating of burners:** |

**List the primary fuel type(s) and if applicable, the secondary fuel type(s). For each fuel type listed, provide the maximum hourly and annual fuel usage for each.**

**Describe each fuel expected to be used during the term of the permit.**

| Fuel Type | Max. Sulfur Content | Max. Ash Content | BTU Value |
|---|---|---|---|
| Coke Oven Gas | 0.67% | | |
| NG Pilots | Neg. | | |
| | | | |
| | | | |

***Emissions Data***

| Criteria Pollutants | Potential Emissions |
|---|---|

| | PPH | TPY |
|---|---|---|
| Carbon Monoxide (CO) | See previous applications | See previous applications |
| Nitrogen Oxides ($NO_X$) | See previous applications | See previous applications |
| Lead (Pb) | See previous applications | See previous applications |
| Particulate Matter ($PM_{2.5}$) | Not Determined For | Emergency Flares |
| Particulate Matter ($PM_{10}$) | See previous applications | See previous applications |
| Total Particulate Matter (TSP) | See previous applications | See previous applications |
| Sulfur Dioxide ($SO_2$) | See previous applications | See previous applications |
| Volatile Organic Compounds (VOC) | See previous applications | See previous applications |

| Hazardous Air Pollutants | Potential Emissions | |
|---|---|---|
| | PPH | TPY |
| | | |
| | | |
| | | |
| | | |

| Regulated Pollutants other than Criteria and HAP | Potential Emissions | |
|---|---|---|
| | PPH | TPY |
| | | |
| | | |
| | | |

**List the method(s) used to calculate the potential emissions (include dates of any stack tests conducted, versions of software used, source and dates of emission factors, etc.).**

See previous applications.

***Applicable Requirements***

**List all applicable requirements for this emission unit. For each applicable requirement, include the underlying rule/regulation citation and/or construction permit with the condition number. (*Note: Title V permit condition numbers alone are not the underlying applicable requirements*). If an emission limit is calculated based on the type of source and design capacity or if a standard is based on a design parameter, this information should also be included.**

Refer to Attachment J.

_x_ Permit Shield

**For all applicable requirements listed above, provide monitoring/testing/recordkeeping/reporting which shall be used to demonstrate compliance. If the method is based on a permit or rule, include the condition number or citation. (Note: Each requirement listed above must have an associated method of demonstrating compliance. If there is not already a required method in place, then a method must be proposed.)**

Refer to Attachment J.

**Are you in compliance with all applicable requirements for this emission unit?** _x_ Yes ___No

If no, complete the **Schedule of Compliance Form** as **ATTACHMENT F.**

(Reserved)

# ATTACHMENT E - Emission Unit Form

***Emission Unit Description***

| **Emission unit ID number:** | **Emission unit name:** | **List any control devices associated with this emission unit:** None |
|---|---|---|
| P002-1, P002-2, P002-3, P002-4, P001-5, P001-6 | Battery # 2 - Charging, Topside Leaks, Door and Offtake Leaks, Underfire Stack, Pushing (from #1, #2, #3 batteries), and Quenching (from #1 #2, and #3 batteries). | |

**Provide a description of the emission unit (type, method of operation, design parameters, etc.):**
Coke battery #2 is a short (less than 6 meter) coke oven battery with 47 ovens. Each oven has four charging holes, two doors and one offtake. The underfiring of Battery #2 involves the combustion of clean coke oven gas which provides heat to the ovens for the coking process.

P001-5 includes pushing from Batteries #1,#2, and #3. Pushing identifies the emissions generated by the pushing of coke out of batteries #1, #2, and #3 into a quench car after the coke process is complete. The maximum amount of coal charged per hour in batteries #1, #2, and #3 combined is 97.2 tons. Approximately 68.1 tons of coke per hour are produced from these three batteries.

P001-6 includes quenching from Batteries #1, #2, and #3. Quenching is a process used to keep coke from burning. The coke pushed from the battery ovens is very hot and will burn when it contacts oxygen in the air. The coke is sprayed with water in a quench tower to reduce its temperature below the ignition point.

| **Manufacturer:** | **Model number:** | **Serial number:** |
|---|---|---|
| Koppers | NA | NA |
| **Construction date:** | **Installation date:** | **Modification date(s):** |
| 01/01/1917 | 01/01/1917 | 01/01/1954 |

**Design Capacity (examples: furnaces - tons/hr, tanks - gallons):** 31.60 tons of coal charged/hour and 22.1 tons of coke/hour

| **Maximum Hourly Throughput:** | **Maximum Annual Throughput:** | **Maximum Operating Schedule:** |
|---|---|---|
| 31.60 tons of coal charged and 22.1 tons of coke/hour | 277,000 tons of coal charged | 8760 hours/year |

***Fuel Usage Data*** **(fill out all applicable fields)**

| **Does this emission unit combust fuel?** X Yes ___ No | **If yes, is it?** X Indirect Fired ___ Direct Fired |
|---|---|
| **Maximum design heat input and/or maximum horsepower rating:** 88 MMBtu/hr | **Type and Btu/hr rating of burners:** Multi-burners 58,200 Btu/hr |

**List the primary fuel type(s) and if applicable, the secondary fuel type(s). For each fuel type listed, provide the maximum hourly and annual fuel usage for each.**

The coke oven gas used in the underfiring process is supplied from the by-product plant at the facility.
COG – 160,000 CFH and 1,401,600 Mcf per year.
Mixed Gas – 160,000 CFH and 1,401,600 Mcf per year.

**Describe each fuel expected to be used during the term of the permit.**

| Fuel Type | Max. Sulfur Content | Max. Ash Content | BTU Value |
|---|---|---|---|
| Coke Oven Gas | 0.075% | Neg | 489 Btu/ft4 |
| | | | |
| | | | |
| | | | |

***Emissions Data***

| Criteria Pollutants | Potential Emissions | |
|---|---|---|
| | PPH | TPY |
| Carbon Monoxide (CO) | See previous applications | See previous applications |
| Nitrogen Oxides ($NO_X$) | See previous applications | See previous applications |
| Lead (Pb) | 0.00062 | 0.0027 |
| Particulate Matter ($PM_{2.5}$) | 3.1 | 13.5 |
| Particulate Matter ($PM_{10}$) | See previous applications | See previous applications |
| Total Particulate Matter (TSP) | See previous applications | See previous applications |
| Sulfur Dioxide ($SO_2$) | See previous applications | See previous applications |
| Volatile Organic Compounds (VOC) | See previous applications | See previous applications |

| Hazardous Air Pollutants | Potential Emissions | |
|---|---|---|
| | PPH | TPY |
| | See previous applications | See previous applications |
| | | |
| | | |
| | | |

| Regulated Pollutants other than Criteria and HAP | Potential Emissions | |
|---|---|---|
| | PPH | TPY |
| | | |
| | | |
| | | |

**List the method(s) used to calculate the potential emissions (include dates of any stack tests conducted, versions of software used, source and dates of emission factors, etc.).**
See previous applications, except PM2.5 and lead are from AP-42 (May 2008).

*Applicable Requirements*

**List all applicable requirements for this emission unit. For each applicable requirement, include the underlying rule/regulation citation and/or construction permit with the condition number. (*Note: Title V permit condition numbers alone are not the underlying applicable requirements*). If an emission limit is calculated based on the type of source and design capacity or if a standard is based on a design parameter, this information should also be included.**

Refer to Attachment J.

_x_ Permit Shield

**For all applicable requirements listed above, provide monitoring/testing/recordkeeping/reporting which shall be used to demonstrate compliance. If the method is based on a permit or rule, include the condition number or citation. (Note: Each requirement listed above must have an associated method of demonstrating compliance. If there is not already a required method in place, then a method must be proposed.)**

Refer to Attachment J.

**Are you in compliance with all applicable requirements for this emission unit?** _x_ Yes ___No

If no, complete the **Schedule of Compliance Form** as **ATTACHMENT F.**

(Reserved)

# ATTACHMENT E - Emission Unit Form

***Emission Unit Description***

| **Emission unit ID number:** | **Emission unit name:** | **List any control devices associated with this emission unit:** None |
|---|---|---|
| P003-1, P003-2, P003-3, P003-4, P001-5, P001-6 | Battery # 3 - Charging, Topside Leaks, Door and Offtake Leaks, Underfire Stack, Pushing (from #1, #2, #3 batteries), and Quenching (from #1 #2, and #3 batteries). | |

**Provide a description of the emission unit (type, method of operation, design parameters, etc.):**
Coke battery #3 is a short (less than 6 meter) coke oven battery with 51 ovens. Each oven has four charging holes, two doors and one offtake. The underfiring of Battery #3 involves the combustion of clean coke oven gas which provides heat to the ovens for the coking process.

P001-5 includes pushing from Batteries #1,#2, and #3. Pushing identifies the emissions generated by the pushing of coke out of batteries #1, #2, and #3 into a quench car after the coke process is complete. The maximum amount of coal charged per hour in batteries #1, #2, and #3 combined is 97.2 tons. Approximately 68.1 tons of coke per hour are produced from these three batteries.

P001-6 includes quenching from Batteries #1, #2, and #3. Quenching is a process used to keep coke from burning. The coke pushed from the battery ovens is very hot and will burn when it contacts oxygen in the air. The coke is sprayed with water in a quench tower to reduce its temperature below the ignition point.

| **Manufacturer:** | **Model number:** | **Serial number:** |
|---|---|---|
| Koppers | NA | NA |
| **Construction date:** | **Installation date:** | **Modification date(s):** |
| 01/01/1917 | 01/01/1917 | 01/01/1954 |

**Design Capacity (examples: furnaces - tons/hr, tanks - gallons):** 34.0 tons of coal charged/hour and 23.8 tons of coke/hour

| **Maximum Hourly Throughput:** | **Maximum Annual Throughput:** | **Maximum Operating Schedule:** |
|---|---|---|
| 34.0 tons of coal charged and 23.8 tons of coke/hour | 298,000 tons of coal charged | 8760 hours/year |

***Fuel Usage Data*** **(fill out all applicable fields)**

| **Does this emission unit combust fuel?** X Yes ___ No | **If yes, is it?** X Indirect Fired ___ Direct Fired |
|---|---|
| **Maximum design heat input and/or maximum horsepower rating:** 99 MMBtu/hr | **Type and Btu/hr rating of burners:** Multi-burners 60,450 Btu/hr |

**List the primary fuel type(s) and if applicable, the secondary fuel type(s). For each fuel type listed, provide the maximum hourly and annual fuel usage for each.**

The coke oven gas used in the underfiring process is supplied from the by-product plant at the facility.
COG – 180,000 CFH and 1,576,800 Mcf per year
Mixed gases – 180,000 CFH and 1,576,800 Mcf per year

**Describe each fuel expected to be used during the term of the permit.**

| Fuel Type | Max. Sulfur Content | Max. Ash Content | BTU Value |
|---|---|---|---|
| Coke Oven Gas | 0.075% | Neg | 489 Btu/ft3 |
| Mix Gas | Neg. | Neg. | 500 Btu/ft3 |
| | | | |
| | | | |

***Emissions Data***

| Criteria Pollutants | Potential Emissions | |
|---|---|---|
| | PPH | TPY |
| Carbon Monoxide (CO) | See previous applications | See previous applications |
| Nitrogen Oxides ($NO_X$) | See previous applications | See previous applications |
| Lead (Pb) | 0.00062 | 0.0027 |
| Particulate Matter ($PM_{2.5}$) | 3.1 | 13.5 |
| Particulate Matter ($PM_{10}$) | See previous applications | See previous applications |
| Total Particulate Matter (TSP) | See previous applications | See previous applications |
| Sulfur Dioxide ($SO_2$) | See previous applications | See previous applications |
| Volatile Organic Compounds (VOC) | See previous applications | See previous applications |

| Hazardous Air Pollutants | Potential Emissions | |
|---|---|---|
| | PPH | TPY |
| | See previous applications | See previous applications |
| | | |
| | | |
| | | |

| Regulated Pollutants other than Criteria and HAP | Potential Emissions | |
|---|---|---|
| | PPH | TPY |
| | | |
| | | |
| | | |

**List the method(s) used to calculate the potential emissions (include dates of any stack tests conducted, versions of software used, source and dates of emission factors, etc.).**
See previous applications, except for PM2.5 and lead are from AP-42 (May 2008).

| *Applicable Requirements* |
|---|
| **List all applicable requirements for this emission unit. For each applicable requirement, include the underlying rule/regulation citation and/or construction permit with the condition number. (*Note: Title V permit condition numbers alone are not the underlying applicable requirements*). If an emission limit is calculated based on the type of source and design capacity or if a standard is based on a design parameter, this information should also be included.**<br><br>Refer to Attachment J. |
| _x_ Permit Shield |
| **For all applicable requirements listed above, provide monitoring/testing/recordkeeping/reporting which shall be used to demonstrate compliance. If the method is based on a permit or rule, include the condition number or citation. (Note: Each requirement listed above must have an associated method of demonstrating compliance. If there is not already a required method in place, then a method must be proposed.)**<br><br>Refer to Attachment J. |
| **Are you in compliance with all applicable requirements for this emission unit?** _x_ Yes ___No<br><br>If no, complete the **Schedule of Compliance Form** as **ATTACHMENT F.** |

(Reserved)

# ATTACHMENT E - Emission Unit Form

***Emission Unit Description***

| **Emission unit ID number:** | **Emission unit name:** | **List any control devices associated with this emission unit:** 8CS, C02, C11a, and C11b. |
|---|---|---|
| P004-1, P004-2, P004-3, P004-4, P004-5, P004-6, P004-7 | Battery # 8 - Charging, Topside Leaks, Door and Offtake Leaks, Underfire Stack, Pushing, Quenching, and Quenching. | |

**Provide a description of the emission unit (type, method of operation, design parameters, etc.):**
Coke battery #8 is a 6 meter coke oven battery with 79 ovens. Each oven has four charging holes, two doors and two offtakes. The underfiring of Battery #8 involves the combustion of clean coke oven gas which provides heat to the ovens for the coking process. Mobile Hood 8CS and Scrubber C02 control P004-5. Quenching Baffles C11a control P004-6. Quenching baffles C11b control P004-7.

| **Manufacturer:** | **Model number:** | **Serial number:** |
|---|---|---|
| Koppers | NA | NA |
| **Construction date:** | **Installation date:** | **Modification date(s):** |
| 01/01/1976 | 01/01/1976 | NA |

**Design Capacity (examples: furnaces - tons/hr, tanks - gallons):** 152.6 tons of coal charged/hour and 106.8 tons of coke/hour

| **Maximum Hourly Throughput:** | **Maximum Annual Throughput:** | **Maximum Operating Schedule:** |
|---|---|---|
| 152.6 tons of coal charged and 106.8 tons of coke/hour | 1,336,776 tons of coal charged | 8760 hours/year |

***Fuel Usage Data*** **(fill out all applicable fields)**

| **Does this emission unit combust fuel?** X Yes ___ No | **If yes, is it?** X Indirect Fired ___Direct Fired |
|---|---|
| **Maximum design heat input and/or maximum horsepower rating:** 477.79 MMBtu/hr | **Type and Btu/hr rating of burners:** Multi-burners 177,000 Btu/hr |

**List the primary fuel type(s) and if applicable, the secondary fuel type(s). For each fuel type listed, provide the maximum hourly and annual fuel usage for each.**

The coke oven gas used in the underfiring process is supplied from the by-product plant at the facility.
COG – 868,700 CFH and 7,609,812 Mcf per year
Mixed gases – 868,700 CFH and 7,609,812 Mcf per year

**Describe each fuel expected to be used during the term of the permit.**

| Fuel Type | Max. Sulfur Content | Max. Ash Content | BTU Value |
|---|---|---|---|
| Coke Oven Gas | 0.075% | Neg | 489 Btu/ft3 |
| Mixed Gas | Neg | Neg | |

| | | | |
|---|---|---|---|
| | | | |
| | | | |

***Emissions Data***

| Criteria Pollutants | Potential Emissions | |
|---|---|---|
| | PPH | TPY |
| Carbon Monoxide (CO) | See previous applications | See previous applications |
| Nitrogen Oxides ($NO_X$) | See previous applications | See previous applications |
| Lead (Pb) | 0.003 | 0.0132 |
| Particulate Matter ($PM_{2.5}$) | 16.1 | 70.6 |
| Particulate Matter ($PM_{10}$) | See previous applications | See previous applications |
| Total Particulate Matter (TSP) | See previous applications | See previous applications |
| Sulfur Dioxide ($SO_2$) | See previous applications | See previous applications |
| Volatile Organic Compounds (VOC) | See previous applications | See previous applications |

| Hazardous Air Pollutants | Potential Emissions | |
|---|---|---|
| | PPH | TPY |
| | See previous applications | See previous applications |
| | | |
| | | |
| | | |

| Regulated Pollutants other than Criteria and HAP | Potential Emissions | |
|---|---|---|
| | PPH | TPY |
| | | |
| | | |
| | | |

**List the method(s) used to calculate the potential emissions (include dates of any stack tests conducted, versions of software used, source and dates of emission factors, etc.).**

See previous applications, except for PM2.5 and Lead are from AP-42 (May 2008).

***Applicable Requirements***

**List all applicable requirements for this emission unit. For each applicable requirement, include the underlying rule/regulation citation and/or construction permit with the condition number. (*Note: Title V permit condition numbers alone are not the underlying applicable requirements*). If an emission limit is calculated based on the type of source and design capacity or if a standard is based on a design parameter, this information should also be included.**

Refer to Attachment J.

_x_ Permit Shield

**For all applicable requirements listed above, provide monitoring/testing/recordkeeping/reporting which shall be used to demonstrate compliance. If the method is based on a permit or rule, include the condition number**

| |
|---|
| **or citation. (Note: Each requirement listed above must have an associated method of demonstrating compliance. If there is not already a required method in place, then a method must be proposed.)**<br><br>Refer to Attachment J. |
| **Are you in compliance with all applicable requirements for this emission unit?** _x_ Yes ___No<br><br>If no, complete the **Schedule of Compliance Form** as **ATTACHMENT F**. |

(Reserved)

# ATTACHMENT E - Emission Unit Form

***Emission Unit Description***

| **Emission unit ID number:** | **Emission unit name:** | **List any control devices associated with this emission unit:** None |
|---|---|---|
| P017 | Boiler # 6 | |

**Provide a description of the emission unit (type, method of operation, design parameters, etc.):**
Boilers are used to produce steam for various processes throughout of facility.

| **Manufacturer:** | **Model number:** | **Serial number:** |
|---|---|---|
| Babcock and Wilcox | Sterling | W-0669-W |
| **Construction date:** | **Installation date:** | **Modification date(s):** |
| 1951 | 1951 | 12/30/2004 |

**Design Capacity (examples: furnaces - tons/hr, tanks - gallons):** 90 MMBtu/hr

| **Maximum Hourly Throughput:** | **Maximum Annual Throughput:** | **Maximum Operating Schedule:** |
|---|---|---|
| 90 MMBtu/hr | 788,400 MMBtu/yr | 8,232 hours/year (routine), 528 hours desulphurization maintenance |

***Fuel Usage Data*** **(fill out all applicable fields)**

| **Does this emission unit combust fuel?** _x_ Yes ___ No | **If yes, is it?** _x_ Indirect Fired ___Direct Fired |
|---|---|
| **Maximum design heat input and/or maximum horsepower rating:** 90 MMBtu/hr | **Type and Btu/hr rating of burners:** Coke Oven Gas Burner<br>Back-up Natural Gas Burner |

**List the primary fuel type(s) and if applicable, the secondary fuel type(s). For each fuel type listed, provide the maximum hourly and annual fuel usage for each.**
Coke Oven Gas – 788,400 MMBtu/year or 1612.3 mmcf
Natural Gas – secondary fuel 90 MMBtu/hour

**Describe each fuel expected to be used during the term of the permit.**

| Fuel Type | Max. Sulfur Content | Max. Ash Content | BTU Value |
|---|---|---|---|
| Coke Oven Gas | 0.075% | Neg | 489 Btu/ft3 |
| Natural Gas | Neg | Neg | 1000 Btu/ft3 |
| | | | |
| | | | |

***Emissions Data*** ***Emissions are for both P017 and P018***

| Criteria Pollutants | Potential Emissions | |
|---|---|---|
| | PPH | TPY |

| | | |
|---|---|---|
| Carbon Monoxide (CO) | 6.8 | 29.7 |
| Nitrogen Oxides ($NO_X$) | 29.5 | 129 |
| Lead (Pb) | 0 | 0 |
| Particulate Matter ($PM_{2.5}$) | 0.78 | 3.42 |
| Particulate Matter ($PM_{10}$) | 2.2 | 9.5 |
| Total Particulate Matter (TSP) | 2.2 | 9.5 |
| Sulfur Dioxide ($SO_2$) | 49.5(routine)/272.3(desulf) | 234.8 |
| Volatile Organic Compounds (VOC) | 0.5 | 2 |

| Hazardous Air Pollutants | Potential Emissions | |
|---|---|---|
| | PPH | TPY |
| | | |
| | | |
| | | |
| | | |

| Regulated Pollutants other than Criteria and HAP | Potential Emissions | |
|---|---|---|
| | PPH | TPY |
| | | |
| | | |
| | | |

**List the method(s) used to calculate the potential emissions (include dates of any stack tests conducted, versions of software used, source and dates of emission factors, etc.).**

PM, PM10, NOx based on AP-42 emission factors
VOC and Co based on AIRS emission factors
SO2 emissions based on H2S grain loading in the coke oven gas
PM2.5 based on AP-42 emission factors (Table 1.4-2, July 1998)

| *Applicable Requirements* |
|---|
| **List all applicable requirements for this emission unit. For each applicable requirement, include the underlying rule/regulation citation and/or construction permit with the condition number. (*Note: Title V permit condition numbers alone are not the underlying applicable requirements*). If an emission limit is calculated based on the type of source and design capacity or if a standard is based on a design parameter, this information should also be included.**<br><br>Refer to Attachment K. |
| _x_ Permit Shield |
| **For all applicable requirements listed above, provide monitoring/testing/recordkeeping/reporting which shall be used to demonstrate compliance. If the method is based on a permit or rule, include the condition number or citation. (Note: Each requirement listed above must have an associated method of demonstrating compliance. If there is not already a required method in place, then a method must be proposed.)**<br><br>Refer to Attachment K. |
| **Are you in compliance with all applicable requirements for this emission unit?** _x_ Yes ___ No<br><br>If no, complete the **Schedule of Compliance Form** as **ATTACHMENT F.** |

# ATTACHMENT E - Emission Unit Form

***Emission Unit Description***

| **Emission unit ID number:** | **Emission unit name:** | **List any control devices associated with this emission unit:** None |
|---|---|---|
| P018 | Boiler No. 7 | |

**Provide a description of the emission unit (type, method of operation, design parameters, etc.):**
Boilers are used to produce steam for various processes throughout the facility.

| **Manufacturer:** | **Model number:** | **Serial number:** |
|---|---|---|
| Babcock and Wilcox | Sterling | W-0669-W |
| **Construction date:** | **Installation date:** | **Modification date(s):** |
| 1951 | 1951 | 12/30/2004 |

**Design Capacity (examples: furnaces - tons/hr, tanks - gallons):** 90 MMBtu/hr

| **Maximum Hourly Throughput:** | **Maximum Annual Throughput:** | **Maximum Operating Schedule:** |
|---|---|---|
| 90 MMBtu/hour | 788,400 MMBtu/year | 8760 hours/year |

***Fuel Usage Data* (fill out all applicable fields)**

| **Does this emission unit combust fuel?** _x_ Yes ___ No | **If yes, is it?** _x_ Indirect Fired ___Direct Fired |
|---|---|
| **Maximum design heat input and/or maximum horsepower rating:** 90 MMBtu/hr | **Type and Btu/hr rating of burners:** Coke Oven Gas Burner<br>Backup Natural Gas Burner |

**List the primary fuel type(s) and if applicable, the secondary fuel type(s). For each fuel type listed, provide the maximum hourly and annual fuel usage for each.**
Coke Oven Gas – 788,400 MMBtu/yr or 1612.3 mmcf
Natural Gas, (secondary fuel) – 90 MMBtu/hr

**Describe each fuel expected to be used during the term of the permit.**

| Fuel Type | Max. Sulfur Content | Max. Ash Content | BTU Value |
|---|---|---|---|
| Coke Oven Gas | 0.075% | Neg | 489 Btu/ft3 |
| Natural Gas | Neg | Neg | 1000 Btu/ft3 |
| | | | |
| | | | |

***Emissions Data*** ***Emissions are for both P017 and P018***

| Criteria Pollutants | Potential Emissions | |
|---|---|---|
| | PPH | TPY |
| Carbon Monoxide (CO) | 6.8 | 29.7 |
| Nitrogen Oxides ($NO_X$) | 29.5 | 129.0 |

| | | |
|---|---|---|
| Lead (Pb) | 0 | 0 |
| Particulate Matter ($PM_{2.5}$) | 0.78 | 3.42 |
| Particulate Matter ($PM_{10}$) | 2.2 | 9.5 |
| Total Particulate Matter (TSP) | 2.2 | 9.5 |
| Sulfur Dioxide ($SO_2$) | 49.5 (routine) 272.3 (desulf) | 234.8 |
| Volatile Organic Compounds (VOC) | 0.5 | 2.0 |
| Hazardous Air Pollutants | Potential Emissions | |
| | PPH | TPY |
| | | |
| | | |
| | | |
| | | |
| Regulated Pollutants other than Criteria and HAP | Potential Emissions | |
| | PPH | TPY |
| | | |
| | | |
| | | |

**List the method(s) used to calculate the potential emissions (include dates of any stack tests conducted, versions of software used, source and dates of emission factors, etc.).**

PM, PM10, Nox based on AP-42 emission factors
VOC and CO based on AIRS emission factors
SO2 emissions based on H2S grain loading in the COG
PM2.5 based on AP-42 emission factors (Table 1.4-2, July 1998)

| *Applicable Requirements* |
|---|
| **List all applicable requirements for this emission unit. For each applicable requirement, include the underlying rule/regulation citation and/or construction permit with the condition number. (*Note: Title V permit condition numbers alone are not the underlying applicable requirements*). If an emission limit is calculated based on the type of source and design capacity or if a standard is based on a design parameter, this information should also be included.**<br><br>Refer to Attachment K. |
| _x_ Permit Shield |
| **For all applicable requirements listed above, provide monitoring/testing/recordkeeping/reporting which shall be used to demonstrate compliance. If the method is based on a permit or rule, include the condition number or citation. (Note: Each requirement listed above must have an associated method of demonstrating compliance. If there is not already a required method in place, then a method must be proposed.)**<br><br>Refer to Attachment K. |
| **Are you in compliance with all applicable requirements for this emission unit?** _x_ Yes ___No<br><br>If no, complete the **Schedule of Compliance Form** as **ATTACHMENT F**. |

# ATTACHMENT E - Emission Unit Form

***Emission Unit Description***

| **Emission unit ID number:** | **Emission unit name:** | **List any control devices associated with this emission unit:** None |
|---|---|---|
| P019 | Boiler No. 8 | |

**Provide a description of the emission unit (type, method of operation, design parameters, etc.):**
Boilers are used to produce steam for various processes throughout the facility.

| **Manufacturer:** | **Model number:** | **Serial number:** |
|---|---|---|
| NA | NA | NA |
| **Construction date:** | **Installation date:** | **Modification date(s):** |
| 1976 | 1976 | 04/15/2005 |

**Design Capacity (examples: furnaces - tons/hr, tanks - gallons):** 85 MMBtu/hr

| **Maximum Hourly Throughput:** | **Maximum Annual Throughput:** | **Maximum Operating Schedule:** |
|---|---|---|
| 85 MMBtu/hour | 744,600 MMBtu/year | 8760 hours/year |

***Fuel Usage Data*** **(fill out all applicable fields)**

| **Does this emission unit combust fuel?** _x_ Yes ___ No | **If yes, is it?** _x_ Indirect Fired ___Direct Fired |
|---|---|
| **Maximum design heat input and/or maximum horsepower rating:** 85 MMBtu/hr | **Type and Btu/hr rating of burners:** Natural Gas Burner |

**List the primary fuel type(s) and if applicable, the secondary fuel type(s). For each fuel type listed, provide the maximum hourly and annual fuel usage for each.**
Natural Gas – 744,600 MMBtu/yr or 744.6 MMCF

**Describe each fuel expected to be used during the term of the permit.**

| Fuel Type | Max. Sulfur Content | Max. Ash Content | BTU Value |
|---|---|---|---|
| Natural Gas | Neg | Neg | 1000 Btu/ft3 |

***Emissions Data***

| Criteria Pollutants | Potential Emissions | |
|---|---|---|
| | PPH | TPY |
| Carbon Monoxide (CO) | 7.2 | 31.3 |
| Nitrogen Oxides ($NO_X$) | 8.5 | 37.3 |
| Lead (Pb) | 0.000043 | 0.00019 |
| Particulate Matter ($PM_{2.5}$) | 0.324 | 1.42 |
| Particulate Matter ($PM_{10}$) | 0.7 | 2.9 |
| Total Particulate Matter (TSP) | 0.7 | 2.9 |

| | | |
|---|---|---|
| Sulfur Dioxide ($SO_2$) | 0.1 | 0.3 |
| Volatile Organic Compounds (VOC) | 0.5 | 2.1 |
| Hazardous Air Pollutants | Potential Emissions | |
| | PPH | TPY |
| | | |
| | | |
| | | |
| | | |
| Regulated Pollutants other than Criteria and HAP | Potential Emissions | |
| | PPH | TPY |
| | | |
| | | |
| | | |

**List the method(s) used to calculate the potential emissions (include dates of any stack tests conducted, versions of software used, source and dates of emission factors, etc.).**

Based on AP-42 emission factors
PM2.5 based on AP-42 emission factors (Table 1.4-2, July 1998)
Lead based on AP-42 (May 2008)

| *Applicable Requirements* |
|---|
| **List all applicable requirements for this emission unit. For each applicable requirement, include the underlying rule/regulation citation and/or construction permit with the condition number. (*Note: Title V permit condition numbers alone are not the underlying applicable requirements*). If an emission limit is calculated based on the type of source and design capacity or if a standard is based on a design parameter, this information should also be included.**<br><br>Refer to Attachment K. |
| _x_ Permit Shield |
| **For all applicable requirements listed above, provide monitoring/testing/recordkeeping/reporting which shall be used to demonstrate compliance. If the method is based on a permit or rule, include the condition number or citation. (Note: Each requirement listed above must have an associated method of demonstrating compliance. If there is not already a required method in place, then a method must be proposed.)**<br><br>Refer to Attachment K. |
| **Are you in compliance with all applicable requirements for this emission unit?** _x_ Yes ___No<br><br>If no, complete the **Schedule of Compliance Form** as **ATTACHMENT F**. |

# ATTACHMENT E - Emission Unit Form

***Emission Unit Description***

| **Emission unit ID number:** | **Emission unit name:** | **List any control devices associated with this emission unit:** None |
|---|---|---|
| S1 | Boiler No. 9 | |

**Provide a description of the emission unit (type, method of operation, design parameters, etc.):**
Boilers are used to produce steam for various processes throughout the facility.

| **Manufacturer:** | **Model number:** | **Serial number:** |
|---|---|---|
| Babcock and Wilcox | FM 103-97 | 201-3409 |
| **Construction date:** | **Installation date:** | **Modification date(s):** |
| 04/01/2004 | 12/30/2004 | 12/30/2004 |

**Design Capacity (examples: furnaces - tons/hr, tanks - gallons):** 98 MMBtu/hr

| **Maximum Hourly Throughput:** | **Maximum Annual Throughput:** | **Maximum Operating Schedule:** |
|---|---|---|
| 98 MMBtu/hour | 858,480 MMBtu/year | 8232 hrs (routine), 528 hrs desulfurization maintenance |

***Fuel Usage Data*** **(fill out all applicable fields)**

| **Does this emission unit combust fuel?** _x_ Yes ___ No | **If yes, is it?** _x_ Indirect Fired ___Direct Fired |
|---|---|
| **Maximum design heat input and/or maximum horsepower rating:** 98 MMBtu/hr | **Type and Btu/hr rating of burners:** Coke Oven Gas Burner<br>Back-up Natural Gas Burner |

**List the primary fuel type(s) and if applicable, the secondary fuel type(s). For each fuel type listed, provide the maximum hourly and annual fuel usage for each.**
Coke Oven Gas – 1,756 MMCF/yr
Natural Gas, (secondary fuel) – 859 MMCF/yr

**Describe each fuel expected to be used during the term of the permit.**

| Fuel Type | Max. Sulfur Content | Max. Ash Content | BTU Value |
|---|---|---|---|
| Coke Oven Gas | 0.075% | Neg | 489 Btu/ft3 |
| Natural Gas | Neg | Neg | 1000 Btu/ft3 |
| | | | |
| | | | |

***Emissions Data***

| Criteria Pollutants | Potential Emissions | |
|---|---|---|
| | PPH | TPY |
| Carbon Monoxide (CO) | 3.7 | 16.2 |
| Nitrogen Oxides ($NO_X$) | 16.1 | 70.3 |

| | | |
|---|---|---|
| Lead (Pb) | | |
| Particulate Matter ($PM_{2.5}$) | 1.13 | 4.95 |
| Particulate Matter ($PM_{10}$) | 1.2 | 5.2 |
| Total Particulate Matter (TSP) | 1.2 | 5.2 |
| Sulfur Dioxide ($SO_2$) | 27 (routine) 148.2 (Desulf) | 127.9 |
| Volatile Organic Compounds (VOC) | 0.3 | 1.1 |
| Hazardous Air Pollutants | Potential Emissions | |
| | PPH | TPY |
| | | |
| | | |
| | | |
| | | |
| Regulated Pollutants other than Criteria and HAP | Potential Emissions | |
| | PPH | TPY |
| | | |
| | | |
| | | |

**List the method(s) used to calculate the potential emissions (include dates of any stack tests conducted, versions of software used, source and dates of emission factors, etc.).**
PM, PM10, NOx based on AP-42 emission factors
VOC and CO based on AIRS emission factors
SO2 emissions based on H2S grain loading in the COG
PM2.5 based on AP-42 emission factors (Table 1.4-2, July 1998)

*Applicable Requirements*

**List all applicable requirements for this emission unit. For each applicable requirement, include the underlying rule/regulation citation and/or construction permit with the condition number. (*Note: Title V permit condition numbers alone are not the underlying applicable requirements*). If an emission limit is calculated based on the type of source and design capacity or if a standard is based on a design parameter, this information should also be included.**

Refer to Attachment K.

_x__ Permit Shield

**For all applicable requirements listed above, provide monitoring/testing/recordkeeping/reporting which shall be used to demonstrate compliance. If the method is based on a permit or rule, include the condition number or citation. (Note: Each requirement listed above must have an associated method of demonstrating compliance. If there is not already a required method in place, then a method must be proposed.)**

Refer to Attachment K.

**Are you in compliance with all applicable requirements for this emission unit?** _x_ Yes ___No

If no, complete the **Schedule of Compliance Form** as **ATTACHMENT F.**

# ATTACHMENT E - Emission Unit Form

***Emission Unit Description***

| **Emission unit ID number:** | **Emission unit name:** | **List any control devices associated with this emission unit:** None |
|---|---|---|
| S5 | Boiler No. 10 | |

**Provide a description of the emission unit (type, method of operation, design parameters, etc.):**
Boilers are used to produce steam for various processes throughout the facility.

| **Manufacturer:** | **Model number:** | **Serial number:** |
|---|---|---|
| Babcock and Wilcox | FM 103-97 | 201-3410 |
| **Construction date:** | **Installation date:** | **Modification date(s):** |
| 04/01/2004 | 12/30/2004 | 12/30/2004 |

**Design Capacity (examples: furnaces - tons/hr, tanks - gallons):** 98 MMBtu/hr

| **Maximum Hourly Throughput:** | **Maximum Annual Throughput:** | **Maximum Operating Schedule:** |
|---|---|---|
| 98 MMBtu/hour | 858,480 MMBtu/year | 8760 hours/year |

***Fuel Usage Data*** **(fill out all applicable fields)**

| **Does this emission unit combust fuel?** _x_ Yes ___ No | **If yes, is it?** _x_ Indirect Fired ___Direct Fired |
|---|---|
| **Maximum design heat input and/or maximum horsepower rating:** 98 MMBtu/hr | **Type and Btu/hr rating of burners:** Coke Oven Gas Burner<br>Back-up Natural Gas Burner |

**List the primary fuel type(s) and if applicable, the secondary fuel type(s). For each fuel type listed, provide the maximum hourly and annual fuel usage for each.**
Coke Oven Gas – 1,756 MMCF/yr
Natural Gas, (secondary fuel) – 859 MMCF/yr

**Describe each fuel expected to be used during the term of the permit.**

| Fuel Type | Max. Sulfur Content | Max. Ash Content | BTU Value |
|---|---|---|---|
| Coke Oven Gas | 0.075% | Neg | 489 Btu/ft3 |
| Natural Gas | Neg | Neg | 1000 Btu/ft3 |
| | | | |
| | | | |

***Emissions Data***

| Criteria Pollutants | Potential Emissions | |
|---|---|---|
| | PPH | TPY |
| Carbon Monoxide (CO) | 3.7 | 16.2 |
| Nitrogen Oxides ($NO_X$) | 16.1 | 70.3 |

| | | |
|---|---|---|
| Lead (Pb) | 0 | 0 |
| Particulate Matter ($PM_{2.5}$) | 1.13 | 4.95 |
| Particulate Matter ($PM_{10}$) | 1.2 | 5.2 |
| Total Particulate Matter (TSP) | 1.2 | 5.2 |
| Sulfur Dioxide ($SO_2$) | 27 (routine) 148.2 (Desulf) | 127.9 |
| Volatile Organic Compounds (VOC) | 0.3 | 1.1 |
| Hazardous Air Pollutants | Potential Emissions | |
| | PPH | TPY |
| | | |
| | | |
| | | |
| | | |
| Regulated Pollutants other than Criteria and HAP | Potential Emissions | |
| | PPH | TPY |
| | | |
| | | |
| | | |

**List the method(s) used to calculate the potential emissions (include dates of any stack tests conducted, versions of software used, source and dates of emission factors, etc.).**

PM, PM10, NOx based on AP-42 emission factors
VOC and CO based on AIRS emission factors
SO2 emissions based on H2S grain loading in the COG
PM2.5 based on AP-42 emission factors (Table 1.4-2, July 1998)

| *Applicable Requirements* |
|---|
| **List all applicable requirements for this emission unit. For each applicable requirement, include the underlying rule/regulation citation and/or construction permit with the condition number. (*Note: Title V permit condition numbers alone are not the underlying applicable requirements*). If an emission limit is calculated based on the type of source and design capacity or if a standard is based on a design parameter, this information should also be included.**<br><br>Refer to Attachment K. |
| _x_ Permit Shield |
| **For all applicable requirements listed above, provide monitoring/testing/recordkeeping/reporting which shall be used to demonstrate compliance. If the method is based on a permit or rule, include the condition number or citation. (Note: Each requirement listed above must have an associated method of demonstrating compliance. If there is not already a required method in place, then a method must be proposed.)**<br><br>Refer to Attachment K. |
| **Are you in compliance with all applicable requirements for this emission unit?** _x_ Yes ___No<br><br>If no, complete the **Schedule of Compliance Form** as **ATTACHMENT F.** |

# ATTACHMENT E - Emission Unit Form

***Emission Unit Description***

| **Emission unit ID number:** | **Emission unit name:** | **List any control devices associated with this emission unit:** None |
|---|---|---|
| P005 | Coal Crushing | |

**Provide a description of the emission unit (type, method of operation, design parameters, etc.):**
The coal crushing unit consists of two fully enclosed hammer mills that are used to crush the coal that is to be used in the coke oven batteries.

| **Manufacturer:** | **Model number:** | **Serial number:** |
|---|---|---|
| NA | NA | NA |
| **Construction date:** | **Installation date:** | **Modification date(s):** |
| 01/01/1917 | 01/01/1917 | 01/01/1948 |

**Design Capacity (examples: furnaces - tons/hr, tanks - gallons):** 500 tons of coal crushed/hour

| **Maximum Hourly Throughput:** | **Maximum Annual Throughput:** | **Maximum Operating Schedule:** |
|---|---|---|
| 500 tons of coal crushed/hour | 4,380,000 tons of coal crushed | 8760 hours/year |

***Fuel Usage Data*** **(fill out all applicable fields)**

| **Does this emission unit combust fuel?** ___Yes _X_ No | **If yes, is it?** ___ Indirect Fired ___Direct Fired |
|---|---|
| **Maximum design heat input and/or maximum horsepower rating:** | **Type and Btu/hr rating of burners:** |

**List the primary fuel type(s) and if applicable, the secondary fuel type(s). For each fuel type listed, provide the maximum hourly and annual fuel usage for each.**

**Describe each fuel expected to be used during the term of the permit.**

| Fuel Type | Max. Sulfur Content | Max. Ash Content | BTU Value |
|---|---|---|---|
| | | | |
| | | | |
| | | | |
| | | | |

| *Emissions Data* | | |
|---|---|---|
| Criteria Pollutants | Potential Emissions | |
| | PPH | TPY |
| Carbon Monoxide (CO) | | |
| Nitrogen Oxides ($NO_X$) | | |
| Lead (Pb) | | |
| Particulate Matter ($PM_{2.5}$) | 0.09 | 0.39 |
| Particulate Matter ($PM_{10}$) | 0.51 | 2.23 |
| Total Particulate Matter (TSP) | | |
| Sulfur Dioxide ($SO_2$) | | |
| Volatile Organic Compounds (VOC) | | |
| Hazardous Air Pollutants | Potential Emissions | |
| | PPH | TPY |
| | | |
| | | |
| | | |
| | | |
| Regulated Pollutants other than Criteria and HAP | Potential Emissions | |
| | PPH | TPY |
| | | |
| | | |
| | | |

**List the method(s) used to calculate the potential emissions (include dates of any stack tests conducted, versions of software used, source and dates of emission factors, etc.).**

PM10 emission factor taken from Draft March 2000 PM10 SIP Plan and based on the following:
PM emission factor = 0.02 lb/ton coal
PM10 fraction = 0.51
Refer to the Draft PM10 plan for specific details.
PM2.5 based on 0.00018 lb/ton PM10 factor in Table 12.2-8 in AP-42 (May 2008).

***Applicable Requirements***

**List all applicable requirements for this emission unit. For each applicable requirement, include the underlying rule/regulation citation and/or construction permit with the condition number. (*Note: Title V permit condition numbers alone are not the underlying applicable requirements*). If an emission limit is calculated based on the type of source and design capacity or if a standard is based on a design parameter, this information should also be included.**

Refer to Attachment L.

| |
|---|
| _x__ Permit Shield |
| **For all applicable requirements listed above, provide monitoring/testing/recordkeeping/reporting which shall be used to demonstrate compliance. If the method is based on a permit or rule, include the condition number or citation. (Note: Each requirement listed above must have an associated method of demonstrating compliance. If there is not already a required method in place, then a method must be proposed.)**<br><br>Refer to Attachment L. |
| **Are you in compliance with all applicable requirements for this emission unit?** _x_ Yes ___No<br><br>If no, complete the **Schedule of Compliance Form** as **ATTACHMENT F.** |

# ATTACHMENT E - Emission Unit Form

***Emission Unit Description***

| **Emission unit ID number:** | **Emission unit name:** | **List any control devices associated with this emission unit:** None |
|---|---|---|
| P006 (inclusive of 1, 1A, 2, Conv. 1, Conv. 2, 4, 5, Conv. A, Conv. B, Conv. B-1, Conv. 3, 10, 11, Conv. 4, Conv. C, 18, 19, 20, 21, 22, 23, C-1, C-2, C-3, C-4, C-5, C-6, C-7, Conv. D, Conv. E, 35, 36, Conv. H, Conv. L, Conv. M, 42, and 43. | Coal Handling | |

**Provide a description of the emission unit (type, method of operation, design parameters, etc.):**
Coal handling operations.

| **Manufacturer:** | **Model number:** | **Serial number:** |
|---|---|---|
| NA | NA | NA |
| **Construction date:** | **Installation date:** | **Modification date(s):** |
| 01/01/1917 | 01/01/1917 | 01/01/1948 |

**Design Capacity (examples: furnaces - tons/hr, tanks - gallons):** 500 tons coal crushed/hour

| **Maximum Hourly Throughput:** | **Maximum Annual Throughput:** | **Maximum Operating Schedule:** |
|---|---|---|
| 500 tons coal crushed/hour | 4,380,000 tons coal crushed/year | 8760 hours/year |

***Fuel Usage Data*** **(fill out all applicable fields)**

| **Does this emission unit combust fuel?** ___Yes _X_ No | **If yes, is it?** ___ Indirect Fired ___Direct Fired |
|---|---|
| **Maximum design heat input and/or maximum horsepower rating:** | **Type and Btu/hr rating of burners:** |

**List the primary fuel type(s) and if applicable, the secondary fuel type(s). For each fuel type listed, provide the maximum hourly and annual fuel usage for each.**

**Describe each fuel expected to be used during the term of the permit.**

| Fuel Type | Max. Sulfur Content | Max. Ash Content | BTU Value |
|---|---|---|---|
| | | | |
| | | | |
| | | | |
| | | | |

***Emissions Data***

| Criteria Pollutants | Potential Emissions | |
|---|---|---|
| | PPH | TPY |
| Carbon Monoxide (CO) | | |
| Nitrogen Oxides ($NO_X$) | | |
| Lead (Pb) | | |
| Particulate Matter ($PM_{2.5}$) | 0.012 | 0.053 |
| Particulate Matter ($PM_{10}$) | See previous applications | See previous applications |
| Total Particulate Matter (TSP) | See previous applications | See previous applications |
| Sulfur Dioxide ($SO_2$) | | |
| Volatile Organic Compounds (VOC) | | |

| Hazardous Air Pollutants | Potential Emissions | |
|---|---|---|
| | PPH | TPY |
| | | |
| | | |
| | | |
| | | |

| Regulated Pollutants other than Criteria and HAP | Potential Emissions | |
|---|---|---|
| | PPH | TPY |
| | | |
| | | |
| | | |

**List the method(s) used to calculate the potential emissions (include dates of any stack tests conducted, versions of software used, source and dates of emission factors, etc.).**

See previous applications.
PM2.5 based on 0.00002499 lb/ton AP-42 factor calculated from Table 13.2.4-1 (Nov 2006).

***Applicable Requirements***

**List all applicable requirements for this emission unit. For each applicable requirement, include the underlying rule/regulation citation and/or construction permit with the condition number. (*Note: Title V permit condition numbers alone are not the underlying applicable requirements*). If an emission limit is calculated based on the type of source and design capacity or if a standard is based on a design parameter, this information should also be included.**

Refer to Attachment L.

_x_ Permit Shield

**For all applicable requirements listed above, provide monitoring/testing/recordkeeping/reporting which shall be used to demonstrate compliance. If the method is based on a permit or rule, include the condition number or citation. (Note: Each requirement listed above must have an associated method of demonstrating compliance. If there is not already a required method in place, then a method must be proposed.)**

| |
|---|
| Refer to Attachment L. |
| **Are you in compliance with all applicable requirements for this emission unit?** _x_ Yes ___No<br><br>If no, complete the **Schedule of Compliance Form** as **ATTACHMENT F**. |

# ATTACHMENT E - Emission Unit Form

***Emission Unit Description***

| **Emission unit ID number:** | **Emission unit name:** | **List any control devices associated with this emission unit:** |
|---|---|---|
| P007-1 | Coke Sizing/Screening | C09 |

**Provide a description of the emission unit (type, method of operation, design parameters, etc.):**
Coke is sized and screened in two sizing and screening operations. Following the coke sizing and screening, the coke is either shipped to the blast furnace at the Ohio Plant, stored in piles or sold. Fines that are screened out of the coke sizing/screening operation are sold.

| **Manufacturer:** | **Model number:** | **Serial number:** |
|---|---|---|
| NA | NA | NA |

| **Construction date:** | **Installation date:** | **Modification date(s):** |
|---|---|---|
| 01/01/1917 | 01/01/1917 | 01/01/1976 |

**Design Capacity (examples: furnaces - tons/hr, tanks - gallons):** 330 tons/hour

| **Maximum Hourly Throughput:** | **Maximum Annual Throughput:** | **Maximum Operating Schedule:** |
|---|---|---|
| 330 tons/hour | | 8760 hours/year |

***Fuel Usage Data*** **(fill out all applicable fields)**

| **Does this emission unit combust fuel?** ___Yes _X_ No | **If yes, is it?** ___ Indirect Fired ___Direct Fired |
|---|---|
| **Maximum design heat input and/or maximum horsepower rating:** | **Type and Btu/hr rating of burners:** |

**List the primary fuel type(s) and if applicable, the secondary fuel type(s). For each fuel type listed, provide the maximum hourly and annual fuel usage for each.**

**Describe each fuel expected to be used during the term of the permit.**

| Fuel Type | Max. Sulfur Content | Max. Ash Content | BTU Value |
|---|---|---|---|
| | | | |
| | | | |
| | | | |
| | | | |

***Emissions Data***

| Criteria Pollutants | Potential Emissions |
|---|---|

| | PPH | TPY |
|---|---|---|
| Carbon Monoxide (CO) | | |
| Nitrogen Oxides ($NO_X$) | | |
| Lead (Pb) | | |
| Particulate Matter ($PM_{2.5}$) | 4.46 | 19.5 |
| Particulate Matter ($PM_{10}$) | See Previous Application | See Previous Application |
| Total Particulate Matter (TSP) | See Previous Application | See Previous Application |
| Sulfur Dioxide ($SO_2$) | | |
| Volatile Organic Compounds (VOC) | | |

| Hazardous Air Pollutants | Potential Emissions | |
|---|---|---|
| | PPH | TPY |
| | | |
| | | |
| | | |
| | | |

| Regulated Pollutants other than Criteria and HAP | Potential Emissions | |
|---|---|---|
| | PPH | TPY |
| | | |
| | | |
| | | |

**List the method(s) used to calculate the potential emissions (include dates of any stack tests conducted, versions of software used, source and dates of emission factors, etc.).**

PM10 emission factor taken from Draft March 2000 PM10 SIP Plan and based on the following:
PM emission factor = 0.09 lb/ton coal
PM10 fraction = 0.51
Refer to the Draft PM10 plan for specific details.
PM2.5 factor based on 0.0135 lb/ton.

***Applicable Requirements***

**List all applicable requirements for this emission unit. For each applicable requirement, include the underlying rule/regulation citation and/or construction permit with the condition number. (*Note: Title V permit condition numbers alone are not the underlying applicable requirements*). If an emission limit is calculated based on the type of source and design capacity or if a standard is based on a design parameter, this information should also be included.**

Refer to Attachment L.

_x_ Permit Shield

**For all applicable requirements listed above, provide monitoring/testing/recordkeeping/reporting which shall be used to demonstrate compliance. If the method is based on a permit or rule, include the condition number or citation. (Note: Each requirement listed above must have an associated method of demonstrating compliance. If there is not already a required method in place, then a method must be proposed.)**

| |
|---|
| Refer to Attachment L. |
| **Are you in compliance with all applicable requirements for this emission unit?** _x_ Yes ___No<br><br>If no, complete the **Schedule of Compliance Form** as **ATTACHMENT F.** |

# ATTACHMENT E - Emission Unit Form

***Emission Unit Description***

| **Emission unit ID number:** | **Emission unit name:** | **List any control devices associated with this emission unit:** None |
|---|---|---|
| P009 | Coal Storage Pile #1 | |

**Provide a description of the emission unit (type, method of operation, design parameters, etc.):**
4.7 acre coal storage pile.

| **Manufacturer:** | **Model number:** | **Serial number:** |
|---|---|---|
| NA | NA | NA |

| **Construction date:** | **Installation date:** | **Modification date(s):** |
|---|---|---|
| 01/01/1917 | 01/01/1917 | 01/01/1917 |

**Design Capacity (examples: furnaces - tons/hr, tanks - gallons):** 4.7 acres.

| **Maximum Hourly Throughput:** | **Maximum Annual Throughput:** | **Maximum Operating Schedule:** |
|---|---|---|
| | | 8760 hours/year |

***Fuel Usage Data*** **(fill out all applicable fields)**

| **Does this emission unit combust fuel?** ___Yes _X_ No | **If yes, is it?** ___ Indirect Fired ___Direct Fired |
|---|---|
| **Maximum design heat input and/or maximum horsepower rating:** | **Type and Btu/hr rating of burners:** |

**List the primary fuel type(s) and if applicable, the secondary fuel type(s). For each fuel type listed, provide the maximum hourly and annual fuel usage for each.**

**Describe each fuel expected to be used during the term of the permit.**

| Fuel Type | Max. Sulfur Content | Max. Ash Content | BTU Value |
|---|---|---|---|
| | | | |
| | | | |
| | | | |
| | | | |

***Emissions Data***

| Criteria Pollutants | Potential Emissions | |
|---|---|---|
| | PPH | TPY |

| | | |
|---|---|---|
| Carbon Monoxide (CO) | | |
| Nitrogen Oxides ($NO_X$) | | |
| Lead (Pb) | | |
| Particulate Matter ($PM_{2.5}$) | 0.051 | 0.223 |
| Particulate Matter ($PM_{10}$) | See previous applications | See previous applications |
| Total Particulate Matter (TSP) | See previous applications | See previous applications |
| Sulfur Dioxide ($SO_2$) | | |
| Volatile Organic Compounds (VOC) | | |

| Hazardous Air Pollutants | Potential Emissions | |
|---|---|---|
| | PPH | TPY |
| | | |
| | | |
| | | |
| | | |

| Regulated Pollutants other than Criteria and HAP | Potential Emissions | |
|---|---|---|
| | PPH | TPY |
| | | |

**List the method(s) used to calculate the potential emissions (include dates of any stack tests conducted, versions of software used, source and dates of emission factors, etc.).**

See previous applications.
PM2.5 based on 0.223 lb/ton AP-42 factor calculated from Table 13.2.4-1 (Nov 2006).

***Applicable Requirements***

**List all applicable requirements for this emission unit. For each applicable requirement, include the underlying rule/regulation citation and/or construction permit with the condition number. (*Note: Title V permit condition numbers alone are not the underlying applicable requirements*). If an emission limit is calculated based on the type of source and design capacity or if a standard is based on a design parameter, this information should also be included.**

Refer to Attachment L.

_x_ Permit Shield

**For all applicable requirements listed above, provide monitoring/testing/recordkeeping/reporting which shall be used to demonstrate compliance. If the method is based on a permit or rule, include the condition number or citation. (Note: Each requirement listed above must have an associated method of demonstrating compliance. If there is not already a required method in place, then a method must be proposed.)**

Refer to Attachment L.

**Are you in compliance with all applicable requirements for this emission unit?** _x_ Yes ___No

If no, complete the **Schedule of Compliance Form** as **ATTACHMENT F.**

# ATTACHMENT E - Emission Unit Form

***Emission Unit Description***

| **Emission unit ID number:** | **Emission unit name:** | **List any control devices associated with this emission unit:** None |
|---|---|---|
| P010 | Coal Storage Pile #2 | |

**Provide a description of the emission unit (type, method of operation, design parameters, etc.):**
4.7 acre coal storage pile.

| **Manufacturer:** | **Model number:** | **Serial number:** |
|---|---|---|
| NA | NA | NA |
| **Construction date:** | **Installation date:** | **Modification date(s):** |
| 01/01/1917 | 01/01/1917 | 01/01/1917 |

**Design Capacity (examples: furnaces - tons/hr, tanks - gallons):** 4.7 acres.

| **Maximum Hourly Throughput:** | **Maximum Annual Throughput:** | **Maximum Operating Schedule:** |
|---|---|---|
| | | 8760 hours/year |

***Fuel Usage Data*** **(fill out all applicable fields)**

| **Does this emission unit combust fuel?** ___Yes _X_ No | **If yes, is it?** ___ Indirect Fired ___Direct Fired |
|---|---|
| **Maximum design heat input and/or maximum horsepower rating:** | **Type and Btu/hr rating of burners:** |

**List the primary fuel type(s) and if applicable, the secondary fuel type(s). For each fuel type listed, provide the maximum hourly and annual fuel usage for each.**

**Describe each fuel expected to be used during the term of the permit.**

| Fuel Type | Max. Sulfur Content | Max. Ash Content | BTU Value |
|---|---|---|---|
| | | | |
| | | | |
| | | | |
| | | | |

***Emissions Data***

| Criteria Pollutants | Potential Emissions | |
|---|---|---|
| | PPH | TPY |

| | | |
|---|---|---|
| Carbon Monoxide (CO) | | |
| Nitrogen Oxides ($NO_X$) | | |
| Lead (Pb) | | |
| Particulate Matter ($PM_{2.5}$) | 0.051 | 0.223 |
| Particulate Matter ($PM_{10}$) | See previous applications | See previous applications |
| Total Particulate Matter (TSP) | See previous applications | See previous applications |
| Sulfur Dioxide ($SO_2$) | | |
| Volatile Organic Compounds (VOC) | | |
| Hazardous Air Pollutants | Potential Emissions | |
| | PPH | TPY |
| | | |
| | | |
| | | |
| | | |
| Regulated Pollutants other than Criteria and HAP | Potential Emissions | |
| | PPH | TPY |
| | | |

**List the method(s) used to calculate the potential emissions (include dates of any stack tests conducted, versions of software used, source and dates of emission factors, etc.).**

See previous applications.
PM2.5 based on 0.223 lb/ton AP-42 factor calculated from Table 13.2.4-1 (Nov 2006).

***Applicable Requirements***

**List all applicable requirements for this emission unit. For each applicable requirement, include the underlying rule/regulation citation and/or construction permit with the condition number. (*Note: Title V permit condition numbers alone are not the underlying applicable requirements*). If an emission limit is calculated based on the type of source and design capacity or if a standard is based on a design parameter, this information should also be included.**

Refer to Attachment L.

_x_ Permit Shield

**For all applicable requirements listed above, provide monitoring/testing/recordkeeping/reporting which shall be used to demonstrate compliance. If the method is based on a permit or rule, include the condition number or citation. (Note: Each requirement listed above must have an associated method of demonstrating compliance. If there is not already a required method in place, then a method must be proposed.)**

Refer to Attachment L.

**Are you in compliance with all applicable requirements for this emission unit?** _x_ Yes ___No

If no, complete the **Schedule of Compliance Form** as **ATTACHMENT F.**

# ATTACHMENT E - Emission Unit Form

***Emission Unit Description***

| **Emission unit ID number:** | **Emission unit name:** | **List any control devices associated with this emission unit:** None |
|---|---|---|
| P011 | Coke Storage Pile | |

**Provide a description of the emission unit (type, method of operation, design parameters, etc.):**
1.7 acre coke storage pile.

| **Manufacturer:** | **Model number:** | **Serial number:** |
|---|---|---|
| NA | NA | NA |
| **Construction date:** | **Installation date:** | **Modification date(s):** |
| 01/01/1917 | 01/01/1917 | 01/01/1917 |

**Design Capacity (examples: furnaces - tons/hr, tanks - gallons):** 1.7 acres.

| **Maximum Hourly Throughput:** | **Maximum Annual Throughput:** | **Maximum Operating Schedule:** |
|---|---|---|
| | | 8760 hours/year |

***Fuel Usage Data*** **(fill out all applicable fields)**

| **Does this emission unit combust fuel?** ___Yes _X__ No | **If yes, is it?** ___ Indirect Fired ___Direct Fired |
|---|---|
| **Maximum design heat input and/or maximum horsepower rating:** | **Type and Btu/hr rating of burners:** |

**List the primary fuel type(s) and if applicable, the secondary fuel type(s). For each fuel type listed, provide the maximum hourly and annual fuel usage for each.**

**Describe each fuel expected to be used during the term of the permit.**

| Fuel Type | Max. Sulfur Content | Max. Ash Content | BTU Value |
|---|---|---|---|
| | | | |
| | | | |
| | | | |
| | | | |

***Emissions Data***

| Criteria Pollutants | Potential Emissions | |
|---|---|---|
| | PPH | TPY |

| | | |
|---|---|---|
| Carbon Monoxide (CO) | | |
| Nitrogen Oxides ($NO_X$) | | |
| Lead (Pb) | | |
| Particulate Matter ($PM_{2.5}$) | 0.014 | 0.061 |
| Particulate Matter ($PM_{10}$) | See previous applications | See previous applications |
| Total Particulate Matter (TSP) | See previous applications | See previous applications |
| Sulfur Dioxide ($SO_2$) | | |
| Volatile Organic Compounds (VOC) | | |

| Hazardous Air Pollutants | Potential Emissions | |
|---|---|---|
| | PPH | TPY |
| | | |
| | | |
| | | |
| | | |

| Regulated Pollutants other than Criteria and HAP | Potential Emissions | |
|---|---|---|
| | PPH | TPY |
| | | |
| | | |
| | | |

**List the method(s) used to calculate the potential emissions (include dates of any stack tests conducted, versions of software used, source and dates of emission factors, etc.).**

See previous applications.

***Applicable Requirements***

**List all applicable requirements for this emission unit. For each applicable requirement, include the underlying rule/regulation citation and/or construction permit with the condition number. (*Note: Title V permit condition numbers alone are not the underlying applicable requirements*). If an emission limit is calculated based on the type of source and design capacity or if a standard is based on a design parameter, this information should also be included.**

Refer to Attachment L.
PM2.5 factor based on 0.061 lb/ton.

_x_ Permit Shield

**For all applicable requirements listed above, provide monitoring/testing/recordkeeping/reporting which shall be used to demonstrate compliance. If the method is based on a permit or rule, include the condition number or citation. (Note: Each requirement listed above must have an associated method of demonstrating compliance. If there is not already a required method in place, then a method must be proposed.)**

Refer to Attachment L.

| |
|---|
| **Are you in compliance with all applicable requirements for this emission unit?** _x_ Yes ___No<br><br>If no, complete the **Schedule of Compliance Form** as **ATTACHMENT F**. |

# ATTACHMENT E - Emission Unit Form

***Emission Unit Description***

| **Emission unit ID number:** | **Emission unit name:** | **List any control devices associated with this emission unit:** |
|---|---|---|
| P023 | Plant Roadways and Parking | DSCS and Sweeping |

**Provide a description of the emission unit (type, method of operation, design parameters, etc.):**
Unpaved roads, paved roads, parking lots, unloading areas.

| **Manufacturer:** | **Model number:** | **Serial number:** |
|---|---|---|
| NA | NA | NA |
| **Construction date:** | **Installation date:** | **Modification date(s):** |
| 01/01/1917 | 01/01/1917 | 01/01/1917 |

**Design Capacity (examples: furnaces - tons/hr, tanks - gallons):**

| **Maximum Hourly Throughput:** | **Maximum Annual Throughput:** | **Maximum Operating Schedule:** |
|---|---|---|
| | | |

***Fuel Usage Data*** **(fill out all applicable fields)**

| **Does this emission unit combust fuel?** ___Yes _x_ No | **If yes, is it?** ___ Indirect Fired ___Direct Fired |
|---|---|
| **Maximum design heat input and/or maximum horsepower rating:** | **Type and Btu/hr rating of burners:** |

**List the primary fuel type(s) and if applicable, the secondary fuel type(s). For each fuel type listed, provide the maximum hourly and annual fuel usage for each.**

**Describe each fuel expected to be used during the term of the permit.**

| Fuel Type | Max. Sulfur Content | Max. Ash Content | BTU Value |
|---|---|---|---|
| | | | |
| | | | |
| | | | |
| | | | |

***Emissions Data***

| Criteria Pollutants | Potential Emissions | |
|---|---|---|
| | PPH | TPY |
| Carbon Monoxide (CO) | | |
| Nitrogen Oxides ($NO_X$) | | |
| Lead (Pb) | | |

| | | |
|---|---|---|
| Particulate Matter ($PM_{2.5}$) | 0.377 | 1.65 |
| Particulate Matter ($PM_{10}$) | See previous applications | See previous applications |
| Total Particulate Matter (TSP) | See previous applications | See previous applications |
| Sulfur Dioxide ($SO_2$) | | |
| Volatile Organic Compounds (VOC) | | |

| Hazardous Air Pollutants | Potential Emissions | |
|---|---|---|
| | PPH | TPY |
| | | |
| | | |
| | | |
| | | |

| Regulated Pollutants other than Criteria and HAP | Potential Emissions | |
|---|---|---|
| | PPH | TPY |
| | | |
| | | |
| | | |

**List the method(s) used to calculate the potential emissions (include dates of any stack tests conducted, versions of software used, source and dates of emission factors, etc.).**

See previous applications.

***Applicable Requirements***

**List all applicable requirements for this emission unit. For each applicable requirement, include the underlying rule/regulation citation and/or construction permit with the condition number. (*Note: Title V permit condition numbers alone are not the underlying applicable requirements*). If an emission limit is calculated based on the type of source and design capacity or if a standard is based on a design parameter, this information should also be included.**

Refer to Attachment M.
PM2.5 emission factor based on AP-42 (13.2.1 and 13.2.2)

_x_ Permit Shield

**For all applicable requirements listed above, provide monitoring/testing/recordkeeping/reporting which shall be used to demonstrate compliance. If the method is based on a permit or rule, include the condition number or citation. (Note: Each requirement listed above must have an associated method of demonstrating compliance. If there is not already a required method in place, then a method must be proposed.)**

Refer to Attachment M.

**Are you in compliance with all applicable requirements for this emission unit?** _x_ Yes ___No

If no, complete the **Schedule of Compliance Form** as **ATTACHMENT F.**

# ATTACHMENT E - Emission Unit Form

***Emission Unit Description***

| **Emission unit ID number:** P012 | **Emission unit name:** Iron Ore Storage Pile | **List any control devices associated with this emission unit:** None |
|---|---|---|

**Provide a description of the emission unit (type, method of operation, design parameters, etc.):**
6.14 acre iron ore storage pile.

| **Manufacturer:** NA | **Model number:** NA | **Serial number:** NA |
|---|---|---|
| **Construction date:** 01/01/1944 | **Installation date:** 01/01/1944 | **Modification date(s):** 01/01/1944 |

**Design Capacity (examples: furnaces - tons/hr, tanks - gallons):** 6.14 acres.

| **Maximum Hourly Throughput:** | **Maximum Annual Throughput:** | **Maximum Operating Schedule:** 8760 hours/year |
|---|---|---|

***Fuel Usage Data*** **(fill out all applicable fields)**

| **Does this emission unit combust fuel?** ___Yes _X_ No | **If yes, is it?** ___ Indirect Fired ___Direct Fired |
|---|---|
| **Maximum design heat input and/or maximum horsepower rating:** | **Type and Btu/hr rating of burners:** |

**List the primary fuel type(s) and if applicable, the secondary fuel type(s). For each fuel type listed, provide the maximum hourly and annual fuel usage for each.**

**Describe each fuel expected to be used during the term of the permit.**

| Fuel Type | Max. Sulfur Content | Max. Ash Content | BTU Value |
|---|---|---|---|
| | | | |
| | | | |
| | | | |
| | | | |

***Emissions Data***

| Criteria Pollutants | Potential Emissions | |
|---|---|---|
| | PPH | TPY |

| | | |
|---|---|---|
| Carbon Monoxide (CO) | | |
| Nitrogen Oxides ($NO_X$) | | |
| Lead (Pb) | | |
| Particulate Matter ($PM_{2.5}$) | 0.066 | 0.29 |
| Particulate Matter ($PM_{10}$) | See previous applications | See previous applications |
| Total Particulate Matter (TSP) | See previous applications | See previous applications |
| Sulfur Dioxide ($SO_2$) | | |
| Volatile Organic Compounds (VOC) | | |

| Hazardous Air Pollutants | Potential Emissions | |
|---|---|---|
| | PPH | TPY |
| | | |
| | | |
| | | |
| | | |

| Regulated Pollutants other than Criteria and HAP | Potential Emissions | |
|---|---|---|
| | PPH | TPY |
| | | |
| | | |
| | | |

**List the method(s) used to calculate the potential emissions (include dates of any stack tests conducted, versions of software used, source and dates of emission factors, etc.).**

See previous applications.
PM2.5 based on 0.29 lb/ton AP-42 factor calculated from Table 13.2.4-1 (Nov 2006).

***Applicable Requirements***

**List all applicable requirements for this emission unit. For each applicable requirement, include the underlying rule/regulation citation and/or construction permit with the condition number. (*Note: Title V permit condition numbers alone are not the underlying applicable requirements*). If an emission limit is calculated based on the type of source and design capacity or if a standard is based on a design parameter, this information should also be included.**

Refer to Attachment L.

_x_ Permit Shield

**For all applicable requirements listed above, provide monitoring/testing/recordkeeping/reporting which shall be used to demonstrate compliance. If the method is based on a permit or rule, include the condition number or citation. (Note: Each requirement listed above must have an associated method of demonstrating compliance. If there is not already a required method in place, then a method must be proposed.)**

Refer to Attachment L.

| |
|---|
| **Are you in compliance with all applicable requirements for this emission unit?** _x_ Yes ___No<br><br>If no, complete the **Schedule of Compliance Form** as **ATTACHMENT F.** |

# ATTACHMENT E - Emission Unit Form

***Emission Unit Description***

| **Emission unit ID number:** | **Emission unit name:** | **List any control devices associated with this emission unit:** None |
|---|---|---|
| P013 | Blast Furnace Flue Dust/Filter Coke Storage Piles | |

**Provide a description of the emission unit (type, method of operation, design parameters, etc.):**
0.45 acre blast furnace flue dust/filter cake storage pile.

| **Manufacturer:** | **Model number:** | **Serial number:** |
|---|---|---|
| NA | NA | NA |

| **Construction date:** | **Installation date:** | **Modification date(s):** |
|---|---|---|
| 01/01/1944 | 01/01/1944 | 01/01/1944 |

**Design Capacity (examples: furnaces - tons/hr, tanks - gallons):** 0.45 acres.

| **Maximum Hourly Throughput:** | **Maximum Annual Throughput:** | **Maximum Operating Schedule:** |
|---|---|---|
| | | 8760 hours/year |

***Fuel Usage Data*** **(fill out all applicable fields)**

| **Does this emission unit combust fuel?** ___Yes _X_ No | **If yes, is it?** ___ Indirect Fired ___Direct Fired |
|---|---|
| **Maximum design heat input and/or maximum horsepower rating:** | **Type and Btu/hr rating of burners:** |

**List the primary fuel type(s) and if applicable, the secondary fuel type(s). For each fuel type listed, provide the maximum hourly and annual fuel usage for each.**

**Describe each fuel expected to be used during the term of the permit.**

| Fuel Type | Max. Sulfur Content | Max. Ash Content | BTU Value |
|---|---|---|---|
| | | | |
| | | | |
| | | | |
| | | | |

***Emissions Data***

| Criteria Pollutants | Potential Emissions | |
|---|---|---|
| | PPH | TPY |

| | | |
|---|---|---|
| Carbon Monoxide (CO) | | |
| Nitrogen Oxides ($NO_X$) | | |
| Lead (Pb) | | |
| Particulate Matter ($PM_{2.5}$) | 0.028 | 0.123 |
| Particulate Matter ($PM_{10}$) | See previous applications | See previous applications |
| Total Particulate Matter (TSP) | See previous applications | See previous applications |
| Sulfur Dioxide ($SO_2$) | | |
| Volatile Organic Compounds (VOC) | | |

| Hazardous Air Pollutants | Potential Emissions | |
|---|---|---|
| | PPH | TPY |
| | | |
| | | |
| | | |
| | | |

| Regulated Pollutants other than Criteria and HAP | Potential Emissions | |
|---|---|---|
| | PPH | TPY |
| | | |
| | | |
| | | |

**List the method(s) used to calculate the potential emissions (include dates of any stack tests conducted, versions of software used, source and dates of emission factors, etc.).**

See previous applications.
PM2.5 based on 0.121 lb/ton AP-42 factor calculated from Table 13.2.4-1 (Nov 2006).

***Applicable Requirements***

**List all applicable requirements for this emission unit. For each applicable requirement, include the underlying rule/regulation citation and/or construction permit with the condition number. (*Note: Title V permit condition numbers alone are not the underlying applicable requirements*). If an emission limit is calculated based on the type of source and design capacity or if a standard is based on a design parameter, this information should also be included.**

Refer to Attachment L.

_x_ Permit Shield

**For all applicable requirements listed above, provide monitoring/testing/recordkeeping/reporting which shall be used to demonstrate compliance. If the method is based on a permit or rule, include the condition number or citation. (Note: Each requirement listed above must have an associated method of demonstrating compliance. If there is not already a required method in place, then a method must be proposed.)**

Refer to Attachment L.

**Are you in compliance with all applicable requirements for this emission unit?** _x_ Yes ___No

If no, complete the **Schedule of Compliance Form** as **ATTACHMENT F**.

# ATTACHMENT E - Emission Unit Form

***Emission Unit Description***

| **Emission unit ID number:** | **Emission unit name:** | **List any control devices associated with this emission unit:** None |
|---|---|---|
| P014 | Roll Scale Storage Pile | |

**Provide a description of the emission unit (type, method of operation, design parameters, etc.):**
0.72 acre roll scale storage pile.

| **Manufacturer:** | **Model number:** | **Serial number:** |
|---|---|---|
| NA | NA | NA |
| **Construction date:** | **Installation date:** | **Modification date(s):** |
| 01/01/1944 | 01/01/1944 | 01/01/1944 |

**Design Capacity (examples: furnaces - tons/hr, tanks - gallons):** 0.72 acres.

| **Maximum Hourly Throughput:** | **Maximum Annual Throughput:** | **Maximum Operating Schedule:** |
|---|---|---|
| | | 8760 hours/year |

***Fuel Usage Data*** **(fill out all applicable fields)**

| **Does this emission unit combust fuel?** ___Yes _X_ No | **If yes, is it?** ___ Indirect Fired ___Direct Fired |
|---|---|
| **Maximum design heat input and/or maximum horsepower rating:** | **Type and Btu/hr rating of burners:** |

**List the primary fuel type(s) and if applicable, the secondary fuel type(s). For each fuel type listed, provide the maximum hourly and annual fuel usage for each.**

**Describe each fuel expected to be used during the term of the permit.**

| Fuel Type | Max. Sulfur Content | Max. Ash Content | BTU Value |
|---|---|---|---|
| | | | |
| | | | |
| | | | |
| | | | |

***Emissions Data***

| Criteria Pollutants | Potential Emissions | |
|---|---|---|
| | PPH | TPY |

| | | |
|---|---|---|
| Carbon Monoxide (CO) | | |
| Nitrogen Oxides ($NO_X$) | | |
| Lead (Pb) | | |
| Particulate Matter ($PM_{2.5}$) | 0.0078 | 0.034 |
| Particulate Matter ($PM_{10}$) | See previous applications | See previous applications |
| Total Particulate Matter (TSP) | See previous applications | See previous applications |
| Sulfur Dioxide ($SO_2$) | | |
| Volatile Organic Compounds (VOC) | | |

| Hazardous Air Pollutants | Potential Emissions | |
|---|---|---|
| | PPH | TPY |
| | | |
| | | |
| | | |
| | | |

| Regulated Pollutants other than Criteria and HAP | Potential Emissions | |
|---|---|---|
| | PPH | TPY |
| | | |
| | | |
| | | |

**List the method(s) used to calculate the potential emissions (include dates of any stack tests conducted, versions of software used, source and dates of emission factors, etc.).**

See previous applications.
PM2.5 emission factor based on 0.034 lb/ton.

***Applicable Requirements***

**List all applicable requirements for this emission unit. For each applicable requirement, include the underlying rule/regulation citation and/or construction permit with the condition number. (*Note: Title V permit condition numbers alone are not the underlying applicable requirements*). If an emission limit is calculated based on the type of source and design capacity or if a standard is based on a design parameter, this information should also be included.**

Refer to Attachment I.

_x_ Permit Shield

**For all applicable requirements listed above, provide monitoring/testing/recordkeeping/reporting which shall be used to demonstrate compliance. If the method is based on a permit or rule, include the condition number or citation. (Note: Each requirement listed above must have an associated method of demonstrating compliance. If there is not already a required method in place, then a method must be proposed.)**

Refer to Attachment I.

**Are you in compliance with all applicable requirements for this emission unit?** _x_ Yes ___No

If no, complete the **Schedule of Compliance Form** as **ATTACHMENT F**.

# ATTACHMENT E - Emission Unit Form

***Emission Unit Description***

| **Emission unit ID number:** | **Emission unit name:** | **List any control devices associated with this emission unit:** None |
|---|---|---|
| P015 | Limestone/Dolomite Storage Pile | |

**Provide a description of the emission unit (type, method of operation, design parameters, etc.):**
1.81 acre roll scale storage pile.

| **Manufacturer:** | **Model number:** | **Serial number:** |
|---|---|---|
| NA | NA | NA |

| **Construction date:** | **Installation date:** | **Modification date(s):** |
|---|---|---|
| 01/01/1944 | 01/01/1944 | 01/01/1944 |

**Design Capacity (examples: furnaces - tons/hr, tanks - gallons):** 1.81 acres.

| **Maximum Hourly Throughput:** | **Maximum Annual Throughput:** | **Maximum Operating Schedule:** |
|---|---|---|
| | | 8760 hours/year |

***Fuel Usage Data*** **(fill out all applicable fields)**

| **Does this emission unit combust fuel?** ___Yes _X__ No | **If yes, is it?** ___ Indirect Fired ___Direct Fired |
|---|---|
| **Maximum design heat input and/or maximum horsepower rating:** | **Type and Btu/hr rating of burners:** |

**List the primary fuel type(s) and if applicable, the secondary fuel type(s). For each fuel type listed, provide the maximum hourly and annual fuel usage for each.**

**Describe each fuel expected to be used during the term of the permit.**

| Fuel Type | Max. Sulfur Content | Max. Ash Content | BTU Value |
|---|---|---|---|
| | | | |
| | | | |
| | | | |
| | | | |

***Emissions Data***

| Criteria Pollutants | Potential Emissions | |
|---|---|---|
| | PPH | TPY |

| | | |
|---|---|---|
| Carbon Monoxide (CO) | | |
| Nitrogen Oxides ($NO_X$) | | |
| Lead (Pb) | | |
| Particulate Matter ($PM_{2.5}$) | 0.0064 | 0.028 |
| Particulate Matter ($PM_{10}$) | See previous applications | See previous applications |
| Total Particulate Matter (TSP) | See previous applications | See previous applications |
| Sulfur Dioxide ($SO_2$) | | |
| Volatile Organic Compounds (VOC) | | |

| Hazardous Air Pollutants | Potential Emissions | |
|---|---|---|
| | PPH | TPY |
| | | |
| | | |
| | | |
| | | |

| Regulated Pollutants other than Criteria and HAP | Potential Emissions | |
|---|---|---|
| | PPH | TPY |
| | | |
| | | |
| | | |

**List the method(s) used to calculate the potential emissions (include dates of any stack tests conducted, versions of software used, source and dates of emission factors, etc.).**

See previous applications.
PM2.5 based on 0.028 lb/ton AP-42 factor calculated from Table 13.2.4-1 (Nov 2006).

***Applicable Requirements***

**List all applicable requirements for this emission unit. For each applicable requirement, include the underlying rule/regulation citation and/or construction permit with the condition number. (*Note: Title V permit condition numbers alone are not the underlying applicable requirements*). If an emission limit is calculated based on the type of source and design capacity or if a standard is based on a design parameter, this information should also be included.**

Refer to Attachment I.

_x_ Permit Shield

**For all applicable requirements listed above, provide monitoring/testing/recordkeeping/reporting which shall be used to demonstrate compliance. If the method is based on a permit or rule, include the condition number or citation. (Note: Each requirement listed above must have an associated method of demonstrating compliance. If there is not already a required method in place, then a method must be proposed.)**

Refer to Attachment I.

| |
|---|
| **Are you in compliance with all applicable requirements for this emission unit?** _x_ Yes ___No<br><br>If no, complete the **Schedule of Compliance Form** as **ATTACHMENT F.** |

# ATTACHMENT E - Emission Unit Form

***Emission Unit Description***

| **Emission unit ID number:** | **Emission unit name:** | **List any control devices associated with this emission unit:** None |
|---|---|---|
| P020-3 | Raw Material Handling | |

**Provide a description of the emission unit (type, method of operation, design parameters, etc.):**
1.81 acre roll scale storage pile.

| **Manufacturer:** | **Model number:** | **Serial number:** |
|---|---|---|
| NA | NA | NA |
| **Construction date:** | **Installation date:** | **Modification date(s):** |
| 01/01/1944 | 01/01/1944 | 01/01/1944 |

**Design Capacity (examples: furnaces - tons/hr, tanks - gallons):** NA

| **Maximum Hourly Throughput:** | **Maximum Annual Throughput:** | **Maximum Operating Schedule:** |
|---|---|---|
| NA | NA | 8760 hours/year |

***Fuel Usage Data*** **(fill out all applicable fields)**

| **Does this emission unit combust fuel?** ___Yes _X__ No | **If yes, is it?** ___ Indirect Fired ___Direct Fired |
|---|---|
| **Maximum design heat input and/or maximum horsepower rating:** | **Type and Btu/hr rating of burners:** |

**List the primary fuel type(s) and if applicable, the secondary fuel type(s). For each fuel type listed, provide the maximum hourly and annual fuel usage for each.**

**Describe each fuel expected to be used during the term of the permit.**

| Fuel Type | Max. Sulfur Content | Max. Ash Content | BTU Value |
|---|---|---|---|
| | | | |
| | | | |
| | | | |
| | | | |

***Emissions Data***

| Criteria Pollutants | Potential Emissions | |
|---|---|---|
| | PPH | TPY |

| | | |
|---|---|---|
| Carbon Monoxide (CO) | | |
| Nitrogen Oxides ($NO_X$) | | |
| Lead (Pb) | | |
| Particulate Matter ($PM_{2.5}$) | 0.028 | 0.123 |
| Particulate Matter ($PM_{10}$) | See previous applications | See previous applications |
| Total Particulate Matter (TSP) | See previous applications | See previous applications |
| Sulfur Dioxide ($SO_2$) | | |
| Volatile Organic Compounds (VOC) | | |

| Hazardous Air Pollutants | Potential Emissions | |
|---|---|---|
| | PPH | TPY |
| | | |
| | | |
| | | |
| | | |

| Regulated Pollutants other than Criteria and HAP | Potential Emissions | |
|---|---|---|
| | PPH | TPY |
| | | |
| | | |
| | | |

**List the method(s) used to calculate the potential emissions (include dates of any stack tests conducted, versions of software used, source and dates of emission factors, etc.).**

See previous applications.
PM2.5 based on BF flue dust/filter and coke piles.

***Applicable Requirements***

**List all applicable requirements for this emission unit. For each applicable requirement, include the underlying rule/regulation citation and/or construction permit with the condition number. (*Note: Title V permit condition numbers alone are not the underlying applicable requirements*). If an emission limit is calculated based on the type of source and design capacity or if a standard is based on a design parameter, this information should also be included.**

Refer to Attachment I.

_x_ Permit Shield

**For all applicable requirements listed above, provide monitoring/testing/recordkeeping/reporting which shall be used to demonstrate compliance. If the method is based on a permit or rule, include the condition number or citation. (Note: Each requirement listed above must have an associated method of demonstrating compliance. If there is not already a required method in place, then a method must be proposed.)**

Refer to Attachment I.

**Are you in compliance with all applicable requirements for this emission unit?** _x_ Yes ___No

If no, complete the **Schedule of Compliance Form** as **ATTACHMENT F**.

# ATTACHMENT E - Emission Unit Form

***Emission Unit Description***

| **Emission unit ID number:** | **Emission unit name:** | **List any control devices associated with this emission unit:** None |
|---|---|---|
| P020-4 | Sinter Plant Barge Dock | |

**Provide a description of the emission unit (type, method of operation, design parameters, etc.):**
Sinter plant barge dock.

| **Manufacturer:** | **Model number:** | **Serial number:** |
|---|---|---|
| NA | NA | NA |
| **Construction date:** | **Installation date:** | **Modification date(s):** |
| 01/01/1942 | 01/01/1942 | 01/01/1942 |

**Design Capacity (examples: furnaces - tons/hr, tanks - gallons):** 500 tons/hr

| **Maximum Hourly Throughput:** | **Maximum Annual Throughput:** | **Maximum Operating Schedule:** |
|---|---|---|
| 500 tons/hr | | 8760 hours/year |

***Fuel Usage Data*** **(fill out all applicable fields)**

| **Does this emission unit combust fuel?** ___Yes _X__ No | **If yes, is it?** ___ Indirect Fired __Direct Fired |
|---|---|
| **Maximum design heat input and/or maximum horsepower rating:** | **Type and Btu/hr rating of burners:** |

**List the primary fuel type(s) and if applicable, the secondary fuel type(s). For each fuel type listed, provide the maximum hourly and annual fuel usage for each.**

**Describe each fuel expected to be used during the term of the permit.**

| Fuel Type | Max. Sulfur Content | Max. Ash Content | BTU Value |
|---|---|---|---|
| | | | |
| | | | |
| | | | |
| | | | |

***Emissions Data***

| Criteria Pollutants | Potential Emissions | |
|---|---|---|
| | PPH | TPY |

| | | |
|---|---|---|
| Carbon Monoxide (CO) | | |
| Nitrogen Oxides ($NO_X$) | | |
| Lead (Pb) | | |
| Particulate Matter ($PM_{2.5}$) | 0.012 | 0.053 |
| Particulate Matter ($PM_{10}$) | See previous applications | See previous applications |
| Total Particulate Matter (TSP) | See previous applications | See previous applications |
| Sulfur Dioxide ($SO_2$) | | |
| Volatile Organic Compounds (VOC) | | |

| Hazardous Air Pollutants | Potential Emissions | |
|---|---|---|
| | PPH | TPY |
| | | |
| | | |
| | | |
| | | |

| Regulated Pollutants other than Criteria and HAP | Potential Emissions | |
|---|---|---|
| | PPH | TPY |
| | | |
| | | |
| | | |

**List the method(s) used to calculate the potential emissions (include dates of any stack tests conducted, versions of software used, source and dates of emission factors, etc.).**

See previous applications.
PM2.5 based on 500 tons per hour coal handling.

***Applicable Requirements***

**List all applicable requirements for this emission unit. For each applicable requirement, include the underlying rule/regulation citation and/or construction permit with the condition number. (*Note: Title V permit condition numbers alone are not the underlying applicable requirements*). If an emission limit is calculated based on the type of source and design capacity or if a standard is based on a design parameter, this information should also be included.**

Refer to Attachment I.

_x_ Permit Shield

**For all applicable requirements listed above, provide monitoring/testing/recordkeeping/reporting which shall be used to demonstrate compliance. If the method is based on a permit or rule, include the condition number or citation. (Note: Each requirement listed above must have an associated method of demonstrating compliance. If there is not already a required method in place, then a method must be proposed.)**

Refer to Attachment I.

| |
|---|
| **Are you in compliance with all applicable requirements for this emission unit?** _x_ Yes ___No<br><br>If no, complete the **Schedule of Compliance Form** as **ATTACHMENT F.** |

# ATTACHMENT E - Emission Unit Form

***Emission Unit Description***

| **Emission unit ID number:** | **Emission unit name:** | **List any control devices associated with this emission unit:** C15 |
|---|---|---|
| P021, P021-1, P021-2, P021-3, P021-4, P021-5, P021-6, P021-7, P021-8, P021-9, P021-10, P021-11, P021-12, P021-13, P021-14, P021-15, P021-16, P021-17, P021-18, P021-19, P021-21, and P021-22.<br><br>Group (009) | By-Products Plant, Tar Bottom Final Coolers (1,2,3), Tar Intercepting Sump, Tar Storage (1,2), Light Oil Condenser, Light Oil Sump, Primary Light Oil Separator, Secondary Light Oil Separator, Light Oil Receiving/Pump Tanks, Light Oil Running Tank, Light Oil Storage Tank, Wash Oil Decanter, Wash Oil Circulating Tank, Wash Oil Muck Tank, Fresh Wash Oil Storage Tank, Excess Ammonia Liquor Tanks, Tar Decanter Tanks, Mother Liquor Tank, Flushing Liquor, Sulfuric Acid Plant Tail Gas Stack, Light Oil Loading, and Coal Tar Loading Station. | |

**Provide a description of the emission unit (type, method of operation, design parameters, etc.):**
By-Products plant including P021-19, sulfuric acid unit that is used to convert hydrogen sulfide into sulfuric acid which is used at the Follansbee facility.

| **Manufacturer:** | **Model number:** | **Serial number:** |
|---|---|---|
| NA | NA | NA |
| **Construction date:** | **Installation date:** | **Modification date(s):** |
| 01/01/1978 | 01/01/1978 | 01/01/1978 |

**Design Capacity (examples: furnaces - tons/hr, tanks - gallons):** 50 tons/day Sulfuric Acid Production

| **Maximum Hourly Throughput:** | **Maximum Annual Throughput:** | **Maximum Operating Schedule:** |
|---|---|---|
| | | 8760 hours/year |

***Fuel Usage Data*** **(fill out all applicable fields)**

| **Does this emission unit combust fuel?** ___Yes _X_ No | **If yes, is it?**<br><br>___ Indirect Fired ___Direct Fired |
|---|---|
| **Maximum design heat input and/or maximum horsepower rating:** | **Type and Btu/hr rating of burners:** |

**List the primary fuel type(s) and if applicable, the secondary fuel type(s). For each fuel type listed, provide the maximum hourly and annual fuel usage for each.**

**Describe each fuel expected to be used during the term of the permit.**

| Fuel Type | Max. Sulfur Content | Max. Ash Content | BTU Value |
|---|---|---|---|
| | | | |
| | | | |
| | | | |
| | | | |

***Emissions Data***

| Criteria Pollutants | Potential Emissions | |
|---|---|---|
| | PPH | TPY |
| Carbon Monoxide (CO) | | |
| Nitrogen Oxides ($NO_X$) | | |
| Lead (Pb) | 0.0026 | 0.012 |
| Particulate Matter ($PM_{2.5}$) | 5.25 | 23.0 |
| Particulate Matter ($PM_{10}$) | 5.25 | 23.0 |
| Total Particulate Matter (TSP) | | |
| Sulfur Dioxide ($SO_2$) | 84 | 367.92 |
| Volatile Organic Compounds (VOC) | | |

| Hazardous Air Pollutants | Potential Emissions | |
|---|---|---|
| | PPH | TPY |
| | | |
| | | |
| | | |
| | | |

| Regulated Pollutants other than Criteria and HAP | Potential Emissions | |
|---|---|---|
| | PPH | TPY |
| | | |
| | | |
| | | |

**List the method(s) used to calculate the potential emissions (include dates of any stack tests conducted, versions of software used, source and dates of emission factors, etc.).**

**P021-19**

PM10 emission factor taken from the AIRS Facility Subsystem Source Classification Codes and Emission factor Listing for Criteria Air Pollutants

SO2 Emission factor taken from WV regulation 10-03.
PM2.5 emissions based on 2.5 lb/ton factor.

***Applicable Requirements***

**List all applicable requirements for this emission unit. For each applicable requirement, include the underlying rule/regulation citation and/or construction permit with the condition number. (*Note: Title V permit condition numbers alone are not the underlying applicable requirements*). If an emission limit is calculated based on the type of source and design capacity or if a standard is based on a design parameter, this information should also be included.**

Refer to Attachment N.

_x__ Permit Shield

**For all applicable requirements listed above, provide monitoring/testing/recordkeeping/reporting which shall be used to demonstrate compliance. If the method is based on a permit or rule, include the condition number or citation. (Note: Each requirement listed above must have an associated method of demonstrating compliance. If there is not already a required method in place, then a method must be proposed.)**

Refer to Attachment N.

**Are you in compliance with all applicable requirements for this emission unit?** _x_ Yes ___No

If no, complete the **Schedule of Compliance Form** as **ATTACHMENT F**.

# ATTACHMENT E - Emission Unit Form

***Emission Unit Description***

| **Emission unit ID number:** | **Emission unit name:** | **List any control devices associated with this emission unit:** None |
|---|---|---|
| P024-1 | Excess COG Flare | |

**Provide a description of the emission unit (type, method of operation, design parameters, etc.):**
The excess coke oven gas flare is used to combust excess clean coke oven gas from the by-product recovery plant that is not used in other processes at the Follansbee plant or other Ohio facilities.

| **Manufacturer:** | **Model number:** | **Serial number:** |
|---|---|---|
| John Zink, Inc | EEF-QS-14 | NA |
| **Construction date:** | **Installation date:** | **Modification date(s):** |
| 9/8/1995 | 9/8/1995 | 9/8/1995 |

**Design Capacity (examples: furnaces - tons/hr, tanks - gallons):** 460 MMBtu/hour

| **Maximum Hourly Throughput:** | **Maximum Annual Throughput:** | **Maximum Operating Schedule:** |
|---|---|---|
| 460 MMBtu/hour | | 8760 hours/year |

***Fuel Usage Data*** **(fill out all applicable fields)**

| **Does this emission unit combust fuel?** _x_ Yes ___ No | **If yes, is it?** ___ Indirect Fired _x_ Direct Fired |
|---|---|
| **Maximum design heat input and/or maximum horsepower rating:** 525 Btu/cf | **Type and Btu/hr rating of burners:** |

**List the primary fuel type(s) and if applicable, the secondary fuel type(s). For each fuel type listed, provide the maximum hourly and annual fuel usage for each.**
Coke Oven Gas is the primary fuel type. Natural gas is used in the pilot.

**Describe each fuel expected to be used during the term of the permit.**

| Fuel Type | Max. Sulfur Content | Max. Ash Content | BTU Value |
|---|---|---|---|
| Coke Oven Gas | 0.075% | Neg | 525 Btu/ft3 |
| Mixed Gas | 0.69% | Neg | 1000 Btu/ft3 |
| | | | |
| | | | |

***Emissions Data***

| Criteria Pollutants | Potential Emissions | |
|---|---|---|
| | PPH | TPY |
| Carbon Monoxide (CO) | 62.2 | 273.3 |
| Nitrogen Oxides ($NO_X$) | 11.4 | 50.1 |

| | | |
|---|---|---|
| Lead (Pb) | | |
| Particulate Matter ($PM_{2.5}$) | 2.0 | 8.8 |
| Particulate Matter ($PM_{10}$) | 2.0 | 8.8 |
| Total Particulate Matter (TSP) | 2.0 | 8.8 |
| Sulfur Dioxide ($SO_2$) | 39.8/396 | 294 |
| Volatile Organic Compounds (VOC) | 23.5 | 103 |

| Hazardous Air Pollutants | Potential Emissions | |
|---|---|---|
| | PPH | TPY |
| | | |
| | | |
| | | |
| | | |

| Regulated Pollutants other than Criteria and HAP | Potential Emissions | |
|---|---|---|
| | PPH | TPY |
| | | |
| | | |
| | | |

**List the method(s) used to calculate the potential emissions (include dates of any stack tests conducted, versions of software used, source and dates of emission factors, etc.).**

PM10 emission factor taken from March 2000 PM10 SIP Plan and based on the following:
AP-42 emission factor = 0.012 lb/MMBtu
Fuel Btu Rating = 568 Btu/cf
PM10 fraction = 0.959
Refer to the March 2000 PM10 Plan for specific details.

SO2 emission factor based on worst case grain loading of coke oven gas; 48 weeks with 50 grains H2S/100 cf and 4 weeks with 350 grains/100 cf. SO2 emission factor = 196 lb SO2/mmcf of coke oven gas.

*Applicable Requirements*

**List all applicable requirements for this emission unit. For each applicable requirement, include the underlying rule/regulation citation and/or construction permit with the condition number. (*Note: Title V permit condition numbers alone are not the underlying applicable requirements*). If an emission limit is calculated based on the type of source and design capacity or if a standard is based on a design parameter, this information should also be included.**

Refer to Attachment N.

_x_ Permit Shield

**For all applicable requirements listed above, provide monitoring/testing/recordkeeping/reporting which shall be used to demonstrate compliance. If the method is based on a permit or rule, include the condition number or citation. (Note: Each requirement listed above must have an associated method of demonstrating compliance. If there is not already a required method in place, then a method must be proposed.)**

Refer to Attachment N.

**Are you in compliance with all applicable requirements for this emission unit?** _x_ Yes ___No

If no, complete the **Schedule of Compliance Form** as **ATTACHMENT F**.

# ATTACHMENT E - Emission Unit Form

***Emission Unit Description***

| **Emission unit ID number** | **Emission unit name:** | **List any control devices associated with this emission unit:** None |
|---|---|---|
| S6 | Emergency Diesel Fired Air Compressor | |

**Provide a description of the emission unit (type, method of operation, design parameters, etc.):**
Diesel fired air compressor to provide plant air during a utility outage. This unit shall operate no more than 500 hours per year.

| **Manufacturer:** | **Model number:** | **Serial number:** |
|---|---|---|
| Cummins Inc. | QSX15-C | NA |
| **Construction date:** | **Installation date:** | **Modification date(s):** |
| 06/15/2005 | 06/15/2005 | 06/30/2005 |

**Design Capacity (examples: furnaces - tons/hr, tanks - gallons):** 1300 scfm @ 150 psi

| **Maximum Hourly Throughput:** | **Maximum Annual Throughput:** | **Maximum Operating Schedule:** |
|---|---|---|
| 18.2 gals/hr | Compressed air 1300 SCFM @ 150 psia | No more than 500 hrs/yr |

***Fuel Usage Data*** **(fill out all applicable fields)**

| **Does this emission unit combust fuel?** _x_ Yes ___ No | **If yes, is it?** ___ Indirect Fired _x_ Direct Fired |
|---|---|
| **Maximum design heat input and/or maximum horsepower rating:** 600 HP | **Type and Btu/hr rating of burners:** 4.20 MMBtu/hr |

**List the primary fuel type(s) and if applicable, the secondary fuel type(s). For each fuel type listed, provide the maximum hourly and annual fuel usage for each.**
Diesel Fuel, 18.2 gallons/hr maximum.

**Describe each fuel expected to be used during the term of the permit.**

| Fuel Type | Max. Sulfur Content | Max. Ash Content | BTU Value |
|---|---|---|---|
| Diesel Fuel | 0.05% | Neg | NA |
| | | | |
| | | | |
| | | | |

***Emissions Data***

| Criteria Pollutants | Potential Emissions | |
|---|---|---|
| | PPH | TPY |
| Carbon Monoxide (CO) | 0.709 | 0.177 |

| | | |
|---|---|---|
| Nitrogen Oxides ($NO_X$) | 9.99 | 2.49 |
| Lead (Pb) | | |
| Particulate Matter ($PM_{2.5}$) | 0.124 | 0.031 |
| Particulate Matter ($PM_{10}$) | 0.124 | 0.031 |
| Total Particulate Matter (TSP) | 0.124 | 0.031 |
| Sulfur Dioxide ($SO_2$) | 0.104 | 0.026 |
| Volatile Organic Compounds (VOC) | 0.177 | 0.044 |
| Hazardous Air Pollutants | Potential Emissions | |
| | PPH | TPY |
| | | |
| | | |
| | | |
| | | |
| Regulated Pollutants other than Criteria and HAP | Potential Emissions | |
| | PPH | TPY |
| | | |
| | | |
| | | |

**List the method(s) used to calculate the potential emissions (include dates of any stack tests conducted, versions of software used, source and dates of emission factors, etc.).**

Manufacturers emission factor for PM, CO, NOx, SO2, and VOC used.
USEPA MACT background document called Regulatory Impact Analysis of the RICE engine NESHAP, EPA number 453/R-02-012 dated November 2002 provided HAP emission factor.
USEPA AP-42 Table 3.4-3 provided Formaldehyde emission factor

*Applicable Requirements*

**List all applicable requirements for this emission unit. For each applicable requirement, include the underlying rule/regulation citation and/or construction permit with the condition number. (*Note: Title V permit condition numbers alone are not the underlying applicable requirements*). If an emission limit is calculated based on the type of source and design capacity or if a standard is based on a design parameter, this information should also be included.**

Refer to Attachment O.

_x_ Permit Shield

**For all applicable requirements listed above, provide monitoring/testing/recordkeeping/reporting which shall be used to demonstrate compliance. If the method is based on a permit or rule, include the condition number or citation. (Note: Each requirement listed above must have an associated method of demonstrating compliance. If there is not already a required method in place, then a method must be proposed.)**

Refer to Attachment O.

**Are you in compliance with all applicable requirements for this emission unit?** _x_ Yes ___No

If no, complete the **Schedule of Compliance Form** as **ATTACHMENT F**.

# ATTACHMENT E - Emission Unit Form

***Emission Unit Description***

| **Emission unit ID number:** | **Emission unit name:** | **List any control devices associated with this emission unit:** None |
|---|---|---|
| S26 | Diesel Fired Emergency Generator | |

**Provide a description of the emission unit (type, method of operation, design parameters, etc.):**
Diesel fired generator to provide backup electrical power during a utility outrage. This Unit shall operate no more than 500 hours per year.

| **Manufacturer:** | **Model number:** | **Serial number:** |
|---|---|---|
| NA | NA | NA |
| **Construction date:** | **Installation date:** | **Modification date(s):** |
| 08/01/2004 | 12/30/2004 | 12/30/2004 |

**Design Capacity (examples: furnaces - tons/hr, tanks - gallons):** 350 KW or 527 HP

| **Maximum Hourly Throughput:** | **Maximum Annual Throughput:** | **Maximum Operating Schedule:** |
|---|---|---|
| 24.7 gals/hr | 12,350 gals | No more than 500 hrs/yr |

***Fuel Usage Data*** **(fill out all applicable fields)**

| **Does this emission unit combust fuel?** _x_ Yes ___ No | **If yes, is it?** ___ Indirect Fired _x_ Direct Fired |
|---|---|
| **Maximum design heat input and/or maximum horsepower rating:** 527 HP | **Type and Btu/hr rating of burners:** 3.67 MMBtu/hr |

**List the primary fuel type(s) and if applicable, the secondary fuel type(s). For each fuel type listed, provide the maximum hourly and annual fuel usage for each.**
Diesel Fuel, 24.7 gallons/hr maximum.

**Describe each fuel expected to be used during the term of the permit.**

| Fuel Type | Max. Sulfur Content | Max. Ash Content | BTU Value |
|---|---|---|---|
| Diesel Fuel | 0.05% | Neg | NA |
| | | | |
| | | | |
| | | | |

***Emissions Data***

| Criteria Pollutants | Potential Emissions | |
|---|---|---|
| | PPH | TPY |
| Carbon Monoxide (CO) | 0.364 | 0.09 |
| Nitrogen Oxides ($NO_X$) | 4.5 | 1.13 |

| | | |
|---|---|---|
| Lead (Pb) | | |
| Particulate Matter ($PM_{2.5}$) | 0.056 | 0.01 |
| Particulate Matter ($PM_{10}$) | 0.056 | 0.01 |
| Total Particulate Matter (TSP) | 0.056 | 0.01 |
| Sulfur Dioxide ($SO_2$) | 0.086 | 0.02 |
| Volatile Organic Compounds (VOC) | 0.061 | 0.02 |
| Hazardous Air Pollutants | Potential Emissions | |
| | PPH | TPY |
| | | |
| | | |
| | | |
| | | |
| Regulated Pollutants other than Criteria and HAP | Potential Emissions | |
| | PPH | TPY |
| | | |
| | | |
| | | |

**List the method(s) used to calculate the potential emissions (include dates of any stack tests conducted, versions of software used, source and dates of emission factors, etc.).**

Manufacturers' emission factor for PM, CO, NOx, SO2, and VOC used.

*Applicable Requirements*

**List all applicable requirements for this emission unit. For each applicable requirement, include the underlying rule/regulation citation and/or construction permit with the condition number. (*Note: Title V permit condition numbers alone are not the underlying applicable requirements*). If an emission limit is calculated based on the type of source and design capacity or if a standard is based on a design parameter, this information should also be included.**

Refer to Attachment O.

_x_ Permit Shield

**For all applicable requirements listed above, provide monitoring/testing/recordkeeping/reporting which shall be used to demonstrate compliance. If the method is based on a permit or rule, include the condition number or citation. (Note: Each requirement listed above must have an associated method of demonstrating compliance. If there is not already a required method in place, then a method must be proposed.)**

Refer to Attachment O.

**Are you in compliance with all applicable requirements for this emission unit?** _x_ Yes ___No

If no, complete the **Schedule of Compliance Form** as **ATTACHMENT F**.

# ATTACHMENT E - Emission Unit Form

***Emission Unit Description***

| **Emission unit ID number:** | **Emission unit name:** | **List any control devices associated with this emission unit:** None |
|---|---|---|
| P026 | Indirect Fired Combustion Units Throughout Plant | |

**Provide a description of the emission unit (type, method of operation, design parameters, etc.):**
Indirect fired combustion units throughout plant.

| **Manufacturer:** | **Model number:** | **Serial number:** |
|---|---|---|
| Varies | Varies | Varies |
| **Construction date:** | **Installation date:** | **Modification date(s):** |
| Varies | Varies | Varies |

**Design Capacity (examples: furnaces - tons/hr, tanks - gallons):**

| **Maximum Hourly Throughput:** | **Maximum Annual Throughput:** | **Maximum Operating Schedule:** |
|---|---|---|
| | | |

***Fuel Usage Data*** **(fill out all applicable fields)**

| **Does this emission unit combust fuel?** ___Yes _X_ No | **If yes, is it?** _X_ Indirect Fired ___Direct Fired |
|---|---|
| **Maximum design heat input and/or maximum horsepower rating:** Varies | **Type and Btu/hr rating of burners:** Varies |

**List the primary fuel type(s) and if applicable, the secondary fuel type(s). For each fuel type listed, provide the maximum hourly and annual fuel usage for each.**
Natural Gas

**Describe each fuel expected to be used during the term of the permit.**

| Fuel Type | Max. Sulfur Content | Max. Ash Content | BTU Value |
|---|---|---|---|
| Natural Gas | 0.01% | Neg | 1,000 Btu/ft3 |
| | | | |
| | | | |
| | | | |

***Emissions Data***

| Criteria Pollutants | Potential Emissions | |
|---|---|---|
| | PPH | TPY |
| Carbon Monoxide (CO) | See previous applications | See previous applications |
| Nitrogen Oxides ($NO_X$) | See previous applications | See previous applications |
| Lead (Pb) | See previous applications | See previous applications |

| | | |
|---|---|---|
| Particulate Matter ($PM_{2.5}$) | Negligible | Negligible |
| Particulate Matter ($PM_{10}$) | See previous applications | See previous applications |
| Total Particulate Matter (TSP) | See previous applications | See previous applications |
| Sulfur Dioxide ($SO_2$) | See previous applications | See previous applications |
| Volatile Organic Compounds (VOC) | See previous applications | See previous applications |
| Hazardous Air Pollutants | Potential Emissions | |
| | PPH | TPY |
| | | |
| | | |
| | | |
| | | |
| Regulated Pollutants other than Criteria and HAP | Potential Emissions | |
| | PPH | TPY |
| | | |
| | | |
| | | |

**List the method(s) used to calculate the potential emissions (include dates of any stack tests conducted, versions of software used, source and dates of emission factors, etc.).**
See previous applications.

| *Applicable Requirements* |
|---|
| **List all applicable requirements for this emission unit. For each applicable requirement, include the underlying rule/regulation citation and/or construction permit with the condition number. (*Note: Title V permit condition numbers alone are not the underlying applicable requirements*). If an emission limit is calculated based on the type of source and design capacity or if a standard is based on a design parameter, this information should also be included.**<br><br>Need to develop attachment. |
| _x_ Permit Shield |
| **For all applicable requirements listed above, provide monitoring/testing/recordkeeping/reporting which shall be used to demonstrate compliance. If the method is based on a permit or rule, include the condition number or citation. (Note: Each requirement listed above must have an associated method of demonstrating compliance. If there is not already a required method in place, then a method must be proposed.)**<br><br>Need to develop attachment. |
| **Are you in compliance with all applicable requirements for this emission unit?** _x_ Yes ___No<br><br>If no, complete the **Schedule of Compliance Form** as **ATTACHMENT F.** |

**ATTACHMENT F**

**Schedule of Compliance Form**

(Reserved)

(Reserved)

# ATTACHMENT G

## Air Pollution Control Device Form

# ATTACHMENT G - Air Pollution Control Device Form

| **Control device ID number:** OBSC | **List all emission units associated with this control device.** P001-5 Pushing from Coke Oven Batteries #1, #2, and #3. | |
|---|---|---|
| **Manufacturer:** NA | **Model number:** NA | **Installation date:** 01/01/1982 |

**Type of Air Pollution Control Device:**

| | | |
|---|---|---|
| __ Baghouse/Fabric Filter | ___ Venturi Scrubber | ___ Multiclone |
| ___ Carbon Bed Adsorber | ___ Packed Tower Scrubber | ___ Single Cyclone |
| ___ Carbon Drum(s) | ___ Other Wet Scrubber | ___ Cyclone Bank |
| ___ Catalytic Incinerator | ___ Condenser | ___ Settling Chamber |
| ___ Thermal Incinerator | ___ Flare | _X_ Other (describe) Shed |
| ___ Wet Plate Electrostatic Precipitator | | ___ Dry Plate Electrostatic Precipitator |

**List the pollutants for which this device is intended to control and the capture and control efficiencies.**

| Pollutant | Capture Efficiency | Control Efficiency |
|---|---|---|
| Particulate Matter | Adequate to meet visible | emissions standards |
| Metals | Adequate to meet visible | emissions standards |
| | | |
| | | |

**Explain the characteristic design parameters of this control device (flow rates, pressure drops, number of bags, size, temperatures, etc.).**
Battery length structure designed to capture and hold pushing fumes while being evacuated to particulate matter collector (fabric filter).

**Is this device subject to the CAM requirements of 40 C.F.R. 64?** ___ Yes _X_ No

If Yes, **Complete ATTACHMENT H**

If No, **Provide justification.** Source subject to NESHAP.

**Describe the parameters monitored and/or methods used to indicate performance of this control device.**

Trace amounts of metals may be incorporated with the particulate matter.

# ATTACHMENT G - Air Pollution Control Device Form

| **Control device ID number:** C01 | **List all emission units associated with this control device.** P001-5 Pushing from Coke Oven Batteries #1, #2, and #3 | |
|---|---|---|
| **Manufacturer:** Griffin Environmental Co. | **Model number:** NA | **Installation date:** 01/01/1982 |

**Type of Air Pollution Control Device:**

| | | |
|---|---|---|
| _x_ Baghouse/Fabric Filter | ___ Venturi Scrubber | ___ Multiclone |
| ___ Carbon Bed Adsorber | ___ Packed Tower Scrubber | ___ Single Cyclone |
| ___ Carbon Drum(s) | ___ Other Wet Scrubber | ___ Cyclone Bank |
| ___ Catalytic Incinerator | ___ Condenser | ___ Settling Chamber |
| ___ Thermal Incinerator | ___ Flare | ___ Other (describe) _____ |
| ___ Wet Plate Electrostatic Precipitator | | ___ Dry Plate Electrostatic Precipitator |

**List the pollutants for which this device is intended to control and the capture and control efficiencies.**

| Pollutant | Capture Efficiency | Control Efficiency |
|---|---|---|
| Particulate Matter | See "Shed" | 95% |
| Metals | See "Shed" | 95% |
| | | |
| | | |

**Explain the characteristic design parameters of this control device (flow rates, pressure drops, number of bags, size, temperatures, etc.).**
Filter bags currently used are made of 16oz./sq. yard polyester felt.
Cleaning method: pulse jet
14 Modules; 21,500 cfm (each)

**Is this device subject to the CAM requirements of 40 C.F.R. 64?** ___ Yes _X_ No

If Yes, **Complete ATTACHMENT H**

If No, **Provide justification.** Source subject to NESHAP.

**Describe the parameters monitored and/or methods used to indicate performance of this control device.**

Trace amounts of metals may be incorporated with the particulate matter.

# ATTACHMENT G - Air Pollution Control Device Form

| **Control device ID number:** C10 | **List all emission units associated with this control device.** P001-6 Battery 1,2, and 3 Quench Baffle | |
|---|---|---|
| **Manufacturer:** NA | **Model number:** NA | **Installation date:** |

**Type of Air Pollution Control Device:**

___ Baghouse/Fabric Filter ___ Venturi Scrubber ___ Multiclone

___ Carbon Bed Adsorber ___ Packed Tower Scrubber ___ Single Cyclone

___ Carbon Drum(s) ___ Other Wet Scrubber ___ Cyclone Bank

___ Catalytic Incinerator ___ Condenser ___ Settling Chamber

___ Thermal Incinerator ___ Flare _x_ Other (describe) Quench Baffle

___ Wet Plate Electrostatic Precipitator ___ Dry Plate Electrostatic Precipitator

**List the pollutants for which this device is intended to control and the capture and control efficiencies.**

| Pollutant | Capture Efficiency | Control Efficiency |
|---|---|---|
| Particulate Matter | Adequate to meet the NESHAP | standards |
| Metals | Adequate to meet the NESHAP | standards |
| | | |
| | | |

**Explain the characteristic design parameters of this control device (flow rates, pressure drops, number of bags, size, temperatures, etc.).**
Pyramid-shaped of overlapping slats covering greater than 95% of the area open to the atmosphere.

**Is this device subject to the CAM requirements of 40 C.F.R. 64?** ___ Yes _X_ No

If Yes, **Complete ATTACHMENT H**

If No, **Provide justification.** Source subject to NESHAP.

**Describe the parameters monitored and/or methods used to indicate performance of this control device.**

# ATTACHMENT G - Air Pollution Control Device Form

| **Control device ID number:** 8CS | **List all emission units associated with this control device.** P004-5 Pushing for Battery No. 8 | |
|---|---|---|
| **Manufacturer:** NA | **Model number:** NA | **Installation date:** 05/01/1976 |

**Type of Air Pollution Control Device:**

| | | |
|---|---|---|
| ___ Baghouse/Fabric Filter | __ Venturi Scrubber | ___ Multiclone |
| ___ Carbon Bed Adsorber | ___ Packed Tower Scrubber | ___ Single Cyclone |
| ___ Carbon Drum(s) | ___ Other Wet Scrubber | ___ Cyclone Bank |
| ___ Catalytic Incinerator | ___ Condenser | ___ Settling Chamber |
| ___ Thermal Incinerator | ___ Flare | _X_ Other (describe) Mobile Hood |
| ___ Wet Plate Electrostatic Precipitator | | ___ Dry Plate Electrostatic Precipitator |

**List the pollutants for which this device is intended to control and the capture and control efficiencies.**

| Pollutant | Capture Efficiency | Control Efficiency |
|---|---|---|
| Particulate Matter | 90% | See Scrubber |
| Metals | 90% | See Scrubber |
| | | |
| | | |

**Explain the characteristic design parameters of this control device (flow rates, pressure drops, number of bags, size, temperatures, etc.).**

**Is this device subject to the CAM requirements of 40 C.F.R. 64?** ___ Yes _X_ No

If Yes, **Complete ATTACHMENT H**

If No, **Provide justification.** Source subject to NESHAP.

**Describe the parameters monitored and/or methods used to indicate performance of this control device.**

# ATTACHMENT G - Air Pollution Control Device Form

| **Control device ID number:** C02 | **List all emission units associated with this control device.** P004-5 Pushing for Battery #8 | |
|---|---|---|
| **Manufacturer:** Air Pol | **Model number:** NA | **Installation date:** 05/01/1974 |

**Type of Air Pollution Control Device:**

| | | |
|---|---|---|
| ___ Baghouse/Fabric Filter | _x_ Venturi Scrubber | ___ Multiclone |
| ___ Carbon Bed Adsorber | ___ Packed Tower Scrubber | ___ Single Cyclone |
| ___ Carbon Drum(s) | ___ Other Wet Scrubber | ___ Cyclone Bank |
| ___ Catalytic Incinerator | ___ Condenser | ___ Settling Chamber |
| ___ Thermal Incinerator | ___ Flare | ___ Other (describe) _____ |
| ___ Wet Plate Electrostatic Precipitator | | ___ Dry Plate Electrostatic Precipitator |

**List the pollutants for which this device is intended to control and the capture and control efficiencies.**

| Pollutant | Capture Efficiency | Control Efficiency |
|---|---|---|
| Particulate Matter | See "Hood" | 90% |
| Metals | See "Hood" | 90% |
| | | |
| | | |

**Explain the characteristic design parameters of this control device (flow rates, pressure drops, number of bags, size, temperatures, etc.).**
Pressure Drop – 43.5" H2O
Type of scrubbing agent used - water
Twin fans at 170,000 ACFM and 1,500 GPM (water flow)

**Is this device subject to the CAM requirements of 40 C.F.R. 64?** ___ Yes _X_ No

If Yes, **Complete ATTACHMENT H**

If No, **Provide justification.** Source subject to NESHAP.

**Describe the parameters monitored and/or methods used to indicate performance of this control device.**

# ATTACHMENT G - Air Pollution Control Device Form

| **Control device ID number:** C11a | **List all emission units associated with this control device.** P004-6 Battery # 8 Quench Baffle-South Tower | |
|---|---|---|
| **Manufacturer:** NA | **Model number:** NA | **Installation date:** 1976 |

**Type of Air Pollution Control Device:**

| | | |
|---|---|---|
| ___ Baghouse/Fabric Filter | ___ Venturi Scrubber | ___ Multiclone |
| ___ Carbon Bed Adsorber | ___ Packed Tower Scrubber | ___ Single Cyclone |
| ___ Carbon Drum(s) | ___ Other Wet Scrubber | ___ Cyclone Bank |
| ___ Catalytic Incinerator | ___ Condenser | ___ Settling Chamber |
| ___ Thermal Incinerator | ___ Flare | _x_ Other (describe) Quench Baffle___ |
| ___ Wet Plate Electrostatic Precipitator | | ___ Dry Plate Electrostatic Precipitator |

**List the pollutants for which this device is intended to control and the capture and control efficiencies.**

| Pollutant | Capture Efficiency | Control Efficiency |
|---|---|---|
| Particulate Matter | 100% | 100% |
| Metals | 100% | 100% |
| | | |
| | | |

**Explain the characteristic design parameters of this control device (flow rates, pressure drops, number of bags, size, temperatures, etc.).**
Pyramid-shaped of overlapping slats covering greater than 95% of the area open to the atmosphere.

**Is this device subject to the CAM requirements of 40 C.F.R. 64?** ___ Yes _X_ No

If Yes, **Complete ATTACHMENT H**

If No, **Provide justification.** Source subject to NESHAP.

**Describe the parameters monitored and/or methods used to indicate performance of this control device.**

# ATTACHMENT G - Air Pollution Control Device Form

| **Control device ID number:** C11b | **List all emission units associated with this control device.** P004-7 Battery # 8 Quench Baffle-North Tower | |
|---|---|---|
| **Manufacturer:** NA | **Model number:** NA | **Installation date:** June 2006 |

**Type of Air Pollution Control Device:**

| | | |
|---|---|---|
| ___ Baghouse/Fabric Filter | ___ Venturi Scrubber | ___ Multiclone |
| ___ Carbon Bed Adsorber | ___ Packed Tower Scrubber | ___ Single Cyclone |
| ___ Carbon Drum(s) | ___ Other Wet Scrubber | ___ Cyclone Bank |
| ___ Catalytic Incinerator | ___ Condenser | ___ Settling Chamber |
| ___ Thermal Incinerator | ___ Flare | _x_ Other (describe) Quench Baffle |
| ___ Wet Plate Electrostatic Precipitator | | ___ Dry Plate Electrostatic Precipitator |

**List the pollutants for which this device is intended to control and the capture and control efficiencies.**

| Pollutant | Capture Efficiency | Control Efficiency |
|---|---|---|
| Particulate Matter | 100% | 100% |
| Metals | 100% | 100% |
| | | |
| | | |

**Explain the characteristic design parameters of this control device (flow rates, pressure drops, number of bags, size, temperatures, etc.).**

Pyramid-shaped of overlapping slats covering greater than 95% of the area open to the atmosphere.

**Is this device subject to the CAM requirements of 40 C.F.R. 64?** ___ Yes _X_ No

If Yes, **Complete ATTACHMENT H**

If No, **Provide justification.** Source subject to NESHAP.

**Describe the parameters monitored and/or methods used to indicate performance of this control device.**

# ATTACHMENT G - Air Pollution Control Device Form

| **Control device ID number:** C09 | **List all emission units associated with this control device.** P007-1 Coke Sizing/Screening | |
|---|---|---|
| **Manufacturer:** NA | **Model number:** NA | **Installation date:** 01/01/1982 |

**Type of Air Pollution Control Device:**

| | | |
|---|---|---|
| ___ Baghouse/Fabric Filter | ___ Venturi Scrubber | ___ Multiclone |
| ___ Carbon Bed Adsorber | ___ Packed Tower Scrubber | ___ Single Cyclone |
| ___ Carbon Drum(s) | ___ Other Wet Scrubber | ___ Cyclone Bank |
| ___ Catalytic Incinerator | ___ Condenser | ___ Settling Chamber |
| ___ Thermal Incinerator | ___ Flare | _X_ Other (describe) Full Enclosure |
| ___ Wet Plate Electrostatic Precipitator | | ___ Dry Plate Electrostatic Precipitator |

**List the pollutants for which this device is intended to control and the capture and control efficiencies.**

| Pollutant | Capture Efficiency | Control Efficiency |
|---|---|---|
| Particulate Matter 10 | | 90% |
| TSP | | 90% |
| | | |
| | | |

**Explain the characteristic design parameters of this control device (flow rates, pressure drops, number of bags, size, temperatures, etc.).**

**Is this device subject to the CAM requirements of 40 C.F.R. 64?** ___ Yes _X_ No

If Yes, **Complete ATTACHMENT H**

If No, **Provide justification.** Existing "enclosure" is not a control device under Part 64.

**Describe the parameters monitored and/or methods used to indicate performance of this control device.**

# ATTACHMENT G - Air Pollution Control Device Form

| **Control device ID number:** C15 | **List all emission units associated with this control device.** P021-19 Sulfuric Acid Plant | |
|---|---|---|
| **Manufacturer:** Bionomic Industries | **Model number:** NA | **Installation date:** 12/01/2005 |

**Type of Air Pollution Control Device:**

| | | |
|---|---|---|
| ___ Baghouse/Fabric Filter | ___ Venturi Scrubber | ___ Multiclone |
| ___ Carbon Bed Adsorber | ___ Packed Tower Scrubber | ___ Single Cyclone |
| ___ Carbon Drum(s) | ___ Other Wet Scrubber | ___ Cyclone Bank |
| ___ Catalytic Incinerator | ___ Condenser | ___ Settling Chamber |
| ___ Thermal Incinerator | ___ Flare | _x_ Other (describe) Caustic Scrubber |
| ___ Wet Plate Electrostatic Precipitator | | ___ Dry Plate Electrostatic Precipitator |

**List the pollutants for which this device is intended to control and the capture and control efficiencies.**

| Pollutant | Capture Efficiency | Control Efficiency |
|---|---|---|
| SO2 | 100% | 70% |
| | | |
| | | |
| | | |

**Explain the characteristic design parameters of this control device (flow rates, pressure drops, number of bags, size, temperatures, etc.).**
Scrubber stack is located adjacent to the existing stack in the sulfuric acid production area near the acid coolers. The stack has a diameter of 24 inches and is 70 feet above ground. The single stage caustic scrubber will have a design flow rate of 7,000 acfm and an actual operating flow rate of 4,000 acfm. Scrubber will be designed to operate at approximately 143 degrees Fahrenheit and with a pressure drop of 1 to 2 inches of H2O.

**Is this device subject to the CAM requirements of 40 C.F.R. 64?** ___ Yes _X_ No

If Yes, **Complete ATTACHMENT H**

If No, **Provide justification.** July 20, 2005 letter from John Benedict regarding applicability determination.

**Describe the parameters monitored and/or methods used to indicate performance of this control device.**

Monitor pH, scrubber recirculation flow rate and blowdown flow rate.

Performance control will be based on pH and blowdown rate.

# ATTACHMENT H

## Compliance Assurance Monitoring (CAM) Plan Form

(Reserved)

# ATTACHMENT H - Compliance Assurance Monitoring (CAM) Plan Form

For definitions and information about the CAM rule, please refer to 40 CFR Part 64. Additional information (including guidance documents) may also be found at http://www.epa.gov/ttn/emc/cam.html

## *CAM APPLICABILITY DETERMINATION*

1) Does the facility have a PSEU (Pollutant-Specific Emissions Unit considered separately with respect to **EACH** regulated air pollutant) that is subject to CAM (40 CFR Part 64), which must be addressed in this CAM plan submittal? To determine applicability, a PSEU must meet **all** of the following criteria (*If No, then the remainder of this form need not be completed*): ☐ YES ☒ NO

a. The PSEU is located at a major source that is required to obtain a Title V permit;

b. The PSEU is subject to an emission limitation or standard for the applicable regulated air pollutant that is NOT exempt;

LIST OF EXEMPT EMISSION LIMITATIONS OR STANDARDS:

- NSPS (40 CFR Part 60) or NESHAP (40 CFR Parts 61 and 63) proposed after 11/15/1990.
- Stratospheric Ozone Protection Requirements.
- Acid Rain Program Requirements.
- Emission Limitations or Standards for which a WVDEP Division of Air Quality Title V permit specifies a continuous compliance determination method, as defined in 40 CFR §64.1.
- An emission cap that meets the requirements specified in 40 CFR §70.4(b)(12).

c. The PSEU uses an add-on control device (as defined in 40 CFR §64.1) to achieve compliance with an emission limitation or standard;

d. The PSEU has potential pre-control device emissions of the applicable regulated air pollutant that are equal to or greater than the Title V Major Source Threshold Levels; AND

e. The PSEU is NOT an exempt backup utility power emissions unit that is municipally-owned.

## *BASIS OF CAM SUBMITTAL*

2) Mark the appropriate box below as to why this CAM plan is being submitted as part of an application for a Title V permit:

☐ RENEWAL APPLICATION. **ALL** PSEUs for which a CAM plan has NOT yet been approved need to be addressed in this CAM plan submittal.

☐ INITIAL APPLICATION (submitted after 4/20/98). **ONLY** large PSEUs (i. e., PSEUs with potential post-control device emissions of an applicable regulated air pollutant that are equal to or greater than Major Source Threshold Levels) need to be addressed in this CAM plan submittal.

☐ SIGNIFICANT MODIFICATION TO LARGE PSEUs. **ONLY** large PSEUs being modified after 4/20/98 need to be addressed in this cam plan submittal. For large PSEUs with an approved CAM plan, Only address the appropriate monitoring requirements affected by the significant modification.

## 3) [a] BACKGROUND DATA AND INFORMATION

Complete the following table for **all** PSEUs that need to be addressed in this CAM plan submittal. This section is to be used to provide background data and information for each PSEU In order to supplement the submittal requirements specified in 40 CFR §64.4. If additional space is needed, attach and label accordingly.

| PSEU DESIGNATION | DESCRIPTION | POLLUTANT | CONTROL DEVICE | [b] EMISSION LIMITATION or STANDARD | [c] MONITORING REQUIREMENT |
|---|---|---|---|---|---|
| | | | | | |
| | | | | | |
| | | | | | |
| | | | | | |
| | | | | | |
| | | | | | |
| | | | | | |
| EXAMPLE Boiler No. 1 | Wood-Fired Boiler | PM | Multiclone | 45CSR§2-4.1.c.; 9.0 lb/hr | Monitor pressure drop across multiclone: Weekly inspection of multiclone |

[a] If a control device is common to more than one PSEU, one monitoring plan may be submitted for the control device with the affected PSEUs identified and any conditions that must be maintained or monitored in accordance with 40 CFR §64.3(a). If a single PSEU is controlled by more than one control device similar in design and operation, one monitoring plan for the applicable control devices may be submitted with the applicable control devices identified and any conditions that must be maintained or monitored in accordance with 40 CFR §64.3(a).

[b] Indicate the emission limitation or standard for any applicable requirement that constitutes an emission limitation, emission standard, or standard of performance (as defined in 40 CFR §64.1).

[c] Indicate the monitoring requirements for the PSEU that are required by an applicable regulation or permit condition.

## *CAM MONITORING APPROACH CRITERIA*

Complete this section for **EACH** PSEU that needs to be addressed in this CAM plan submittal. This section may be copied as needed for each PSEU. This section is to be used to provide monitoring data and information for EACH indicator selected for EACH PSEU in order to meet the monitoring design criteria specified in 40 CFR §64.3 and §64.4. if more than two indicators are being selected for a PSEU or if additional space is needed, attach and label accordingly with the appropriate PSEU designation, pollutant, and indicator numbers.

| **4a) PSEU Designation:** | **4b) Pollutant:** | **4c) [a] Indicator No. 1:** | **4d) [a] Indicator No. 2:** |
|---|---|---|---|
| | | | |

| | | |
|---|---|---|
| **5a) GENERAL CRITERIA** Describe the MONITORING APPROACH used to measure the indicators: | | |
| [b] Establish the appropriate INDICATOR RANGE or the procedures for establishing the indicator range which provides a reasonable assurance of compliance: | | |
| **5b) PERFORMANCE CRITERIA** Provide the SPECIFICATIONS FOR OBTAINING REPRESENTATIVE DATA, such as detector location, installation specifications, and minimum acceptable accuracy: | | |
| [c] For new or modified monitoring equipment, provide VERIFICATION PROCEDURES, including manufacturer's recommendations, TO CONFIRM THE OPERATIONAL STATUS of the monitoring: | | |
| Provide QUALITY ASSURANCE AND QUALITY CONTROL (QA/QC) PRACTICES that are adequate to ensure the continuing validity of the data, (i.e., daily calibrations, visual inspections, routine maintenance, RATA, etc.): | | |
| [d] Provide the MONITORING FREQUENCY: | | |
| Provide the DATA COLLECTION PROCEDURES that will be used: | | |
| Provide the DATA AVERAGING PERIOD for the purpose of determining whether an excursion or exceedance has occurred: | | |

[a] Describe all indicators to be monitored which satisfies 40 CFR §64.3(a). Indicators of emission control performance for the control device and associated capture system may include measured or predicted emissions (including visible emissions or opacity), process and control device operating parameters that affect control device (and capture system) efficiency or emission rates, or recorded findings of inspection and maintenance activities.

[b] Indicator Ranges may be based on a single maximum or minimum value or at multiple levels that are relevant to distinctly different operating conditions, expressed as a function of process variables, expressed as maintaining the applicable indicator in a particular operational status or designated condition, or established as interdependent between more than one indicator. For CEMS, COMS, or PEMS, include the most recent certification test for the monitor.

[c] The verification for operational status should include procedures for installation, calibration, and operation of the monitoring equipment, conducted in accordance with the manufacturer's recommendations, necessary to confirm the monitoring equipment is operational prior to the commencement of the required monitoring.

[d] Emission units with post-control PTE ≥ 100 percent of the amount classifying the source as a major source (i.e., Large PSEU) must collect four or more values per hour to be averaged. A reduced data collection frequency may be approved in limited circumstances. Other emission units must collect data at least once per 24 hour period.

## *RATIONALE AND JUSTIFICATION*

Complete this section for **EACH** PSEU that needs to be addressed in this CAM plan submittal. This section may be copied as needed for each PSEU. This section is to be used to provide rationale and justification for the selection of EACH indicator and monitoring approach and EACH indicator range in order to meet the submittal requirements specified in 40 CFR §64.4.

| 6a) PSEU Designation: | 6b) Regulated Air Pollutant: |
|---|---|
| | |

7) **INDICATORS AND THE MONITORING APPROACH**: Provide the rationale and justification for the selection of the indicators and the monitoring approach used to measure the indicators. Also provide any data supporting the rationale and justification. Explain the reasons for any differences between the verification of operational status or the quality assurance and control practices proposed, and the manufacturer's recommendations. (If additional space is needed, attach and label accordingly with the appropriate PSEU designation and pollutant):

8) **INDICATOR RANGES**: Provide the rationale and justification for the selection of the indicator ranges. The rationale and justification shall indicate how **EACH** indicator range was selected by either a COMPLIANCE OR PERFORMANCE TEST, a TEST PLAN AND SCHEDULE, or by ENGINEERING ASSESSMENTS. Depending on which method is being used for each indicator range, include the specific information required below for that specific indicator range. (If additional space is needed, attach and label accordingly with the appropriate PSEU designation and pollutant):

- COMPLIANCE OR PERFORMANCE TEST (Indicator ranges determined from control device operating parameter data obtained during a compliance or performance test conducted under regulatory specified conditions or under conditions representative of maximum potential emissions under anticipated operating conditions. Such data may be supplemented by engineering assessments and manufacturer's recommendations). The rationale and justification shall INCLUDE a summary of the compliance or performance test results that were used to determine the indicator range, and documentation indicating that no changes have taken place that could result in a significant change in the control system performance or the selected indicator ranges since the compliance or performance test was conducted.

- TEST PLAN AND SCHEDULE (Indicator ranges will be determined from a proposed implementation plan and schedule for installing, testing, and performing any other appropriate activities prior to use of the monitoring). The rationale and justification shall INCLUDE the proposed implementation plan and schedule that will provide for use of the monitoring as expeditiously as practicable after approval of this CAM plan, except that in no case shall the schedule for completing installation and beginning operation of the monitoring exceed 180 days after approval.

- ENGINEERING ASSESSMENTS (Indicator Ranges or the procedures for establishing indicator ranges are determined from engineering assessments and other data, such as manufacturers' design criteria and historical monitoring data, because factors specific to the type of monitoring, control device, or PSEU make compliance or performance testing unnecessary). The rationale and justification shall INCLUDE documentation demonstrating that compliance testing is not required to establish the indicator range.

RATIONALE AND JUSTIFICATION:

# ATTACHMENT I

## Facility Wide Applicable Requirements

(Reserved)

3.1.1. **Open burning.** The open burning of refuse by any person, firm, corporation, association or public agency is prohibited except as noted in 45CSR§6-3.1.
**[45CSR§6-3.1.]**

3.1.2. **Open burning exemptions.** The exemptions listed in 45CSR§6-3.1 are subject to the following stipulation: Upon notification by the Secretary, no person shall cause, suffer, allow or permit any form of open burning during existing or predicted periods of atmospheric stagnation. Notification shall be made by such means as the Secretary may deem necessary and feasible.
**[45CSR§6-3.2.]**

3.1.3. **Asbestos.** The permittee is responsible for thoroughly inspecting the facility, or part of the facility, prior to commencement of demolition or renovation for the presence of asbestos and complying with 40 C.F.R. § 61.145, 40 C.F.R. § 61.148, and 40 C.F.R. § 61.150. The permittee must notify the Secretary at least ten (10) working days prior to the commencement of any asbestos removal on the forms prescribed by the Secretary if the permittee is subject to the notification requirements of 40 C.F.R. § 61.145(b)(3)(i). A copy of this notice is required to be sent to the USEPA, the Division of Waste Management and the Bureau for Public Health - Environmental Health.
**[40 C.F.R. 61]**

3.1.4. **Odor.** No person shall cause, suffer, allow or permit the discharge of air pollutants which cause or contribute to an objectionable odor at any location occupied by the public.
**[45CSR§4-3.1 State-Enforceable only.]**

3.1.5. **Permanent shutdown.** A source which has not operated at least 500 hours in one 12-month period within the previous five (5) year time period may be considered permanently shutdown, unless such source can provide to the Secretary, with reasonable specificity, information to the contrary. All permits may be modified or revoked and/or reapplication or application for new permits may be required for any source determined to be permanently shutdown.
**[45CSR§13-10.5 State-Enforceable only.]**

3.1.6. **Standby plan for reducing emissions.** When requested by the Secretary, the permittee shall prepare standby plans for reducing the emissions of air pollutants in accordance with the objectives set forth in Tables I, II, and III of 45CSR11.
**[45CSR§11-5.2]**

3.1.7. **Emission inventory.** The permittee is responsible for submitting, on an annual basis, an emission inventory in accordance with the submittal requirements of the Division of Air Quality. This report is to be submitted no later than July 1 of each year unless directed by DAQ.
**[W.Va. Code § 22-5-4(a)(14)]**

3.1.8. **Ozone-depleting substances.** For those facilities performing maintenance, service, repair or disposal of appliances, the permittee shall comply with the standards for recycling and emissions reduction pursuant to 40 C.F.R. Part 82, Subpart F, except as provided for Motor Vehicle Air Conditioners (MVACs) in Subpart B:

a. Persons opening appliances for maintenance, service, repair, or disposal must comply with the prohibitions and required practices pursuant to 40 C.F.R. §§ 82.154 and 82.156.

b. Equipment used during the maintenance, service, repair, or disposal of appliances must comply with the standards for recycling and recovery equipment pursuant to 40 C.F.R. § 82.158.

c. Persons performing maintenance, service, repair, or disposal of appliances must be certified by an approved technician certification program pursuant to 40 C.F.R. § 82.161.

**[40 C.F.R. 82, Subpart F]**

3.1.9. **Risk Management Plan.** Should this stationary source, as defined in 40 C.F.R. § 68.3, become subject to Part 68, then the owner or operator shall submit a risk management plan (RMP) by the date specified in 40 C.F.R. § 68.10 and shall certify compliance with the requirements of Part 68 as part of the annual compliance certification as required by 40 C.F.R. Part 70 or 71.
**[40 C.F.R. 68]**

3.1.10. No person shall cause, suffer, allow or permit emission of smoke and/or particulate matter into the open air from any process source operation which is greater than twenty (20) percent opacity, except as noted in subsections 45CSR§7- 3.2 (See Section 3.1.11), 3.3, 3.4, 3.5, 3.6, and 3.7.
**[45CSR§7-3.1.]**

3.1.11. The provisions of Section 3.1.10. [45CSR§7-3.1.] shall not apply to smoke and/or particulate matter emitted from any process source operation which is less than forty (40) percent opacity for any period or periods aggregating no more than five (5) minutes in any sixty (60) minute period.
**[45CSR§7-3.2.]**

3.1.12. No person shall cause, suffer, allow or permit particulate matter to be vented into the open air from any type source operation or duplicate source operation, or from all air pollution control equipment installed on any type source operation or duplicate source operation in excess of the quantity specified under the appropriate source operation type in Table 45-7A.
**[45CSR§7-4.1.]**

3.1.13. Any stack serving any process source operation or air pollution control equipment on any process source operation shall contain flow straightening devices or a vertical run of sufficient length to establish flow patterns consistent with acceptable stack sampling procedures.
**[45CSR§7-4.12.]**

3.1.14. No person shall cause, suffer, allow, or permit any manufacturing process generating fugitive particulate matter to operate that is not equipped with a system to minimize the emissions of fugitive particulate matter. To minimize means that a particulate capture or suppression system shall be installed to ensure the lowest fugitive particulate emissions reasonably achievable.
**[45CSR§7-5.1.]**

3.1.15. The owner or operator of a plant shall maintain dust control of the plant premises, and plant owned, leased or controlled access roads, by paving, application of asphalt, chemical dust suppressants or other suitable dust control measures. Good operating practices shall be implemented and when necessary dust suppressants shall be applied in relation to stockpiling and general material handling to prevent dust generation and atmospheric entrainment.
**[45CSR§7-5.2.]**

3.1.16. Due to unavoidable malfunction of equipment, emissions exceeding those set forth in this rule may be permitted by the Director for periods not to exceed ten (10) days upon specific application to the Director. Such application shall be made within twenty-four (24) hours of the malfunction. In cases of major equipment failure, additional time

periods may be granted by the Director provided a corrective program has been submitted by the owner or operator and approved by the Director.
**[45CSR§7-9.1.]**

3.1.17. Maintenance operations (as defined in 45CSR7) shall be exempt from the provisions of 45CSR§7-4 provided that at all times the owner or operator shall conduct maintenance operations in a manner consistent with good air pollution control practice for minimizing emissions. Determination of whether acceptable operating and maintenance procedures are being used will be based on information available to the Director which may

include, but is not limited to, monitoring results, opacity observations, review of operating and maintenance procedures and inspection of the source.
**[45CSR§7-10.3.]**

3.1.18. An owner or operator may apply for an alternative visible emission standard for start-up and shutdown periods, on a case-by-case basis, by filing a written petition with the Director. The Director may approve an alternative visible emission standard for start-ups and shutdowns to the visible emission standard required under 45CSR§7-3. The petition shall include a demonstration satisfactory to the Director:

a. That it is technologically or economically infeasible to comply with 45CSR§7-3;

b. That establishes the need for approval of a start-up or shutdown plan based upon information including, but not limited to, monitoring results, opacity observations, operating procedures and source inspections.

c. That the particulate matter weight emission standards under section 4 are being met, as determined in accordance with 45CSR7A - "Compliance Test Procedures For 45CSR7 - ' To Prevent and Control Particulate Air Pollution From Manufacturing Process Operations'"; and

d. That during periods of start-ups and shutdowns the owner or operator shall, to the extent practicable, maintain and operate any manufacturing process including associated air pollution control equipment in a manner consistent with good air pollution control practice for minimizing emissions. Determination of whether acceptable operating and maintenance procedures are being used will be based on information available to the Director which may include, but is not limited to, monitoring results, opacity observations, review of operating and maintenance procedures and inspection of the source. **[45CSR§7-10.4.]**

3.1.19. Reserved.

3.1.20. The emissions control program required under Section V.1. and V.2. of Consent Order (CO-SIP-91-29) shall be achieved in accordance with the following schedule:
**[CO-SIP-91-29, Section V., 3.]**

| Action | Schedule (To be Determined) |
|---|---|
| Initiate engineering design and prepare specifications: | To be determined when plan is approved. |
| Issue purchase orders for equipment and finalize controls for installation: | To be determined when plan is approved. |
| Begin construction (or commence control program): | To be determined when plan is approved. |
| Complete construction and demonstrate compliance: | Within 360 days of receipt of EPA notice of nonattainment determination. |

3.1.21 The owner or operator of fuel burning unit(s), manufacturing process source(s) or combustion source(s) shall demonstrate compliance with 45CSR§§10-3, 4 and 5 by testing and /or monitoring in accordance with one or more of the following: 40 C.F.R. Part 60, Appendix A, Method 6, Method 15, continuous emissions monitoring systems (CEMS) or fuel sampling and analysis as set forth in an approved monitoring plan for each emission unit. Compliance with this requirement is satisfied through compliance with the requirements of the approved 45CSR10 Monitoring Plan (Appendix A) submitted on September 28, 2001 and any amendments thereto.
**[45CSR§10-8.2.c, Batteries #1, #2, #3, and #8, Boilers #6, #7, and #8, #9 and #10, By-Product Plant]**

3.1.22. The owner or operator of fuel burning unit(s), manufacturing process source(s) or combustion source(s) subject to 45CSR§§10-3, 4 and 5 shall maintain on-site a record of all required monitoring data as established in a monitoring plan pursuant to 45CSR§10-8.2.c. Such records shall be made available to the Director or his duly authorized representative upon request. Such records shall be retained on-site for a minimum of five years. Compliance with this requirement is satisfied through compliance with the requirements of the approved 45CSR10 Monitoring Plan (Appendix A) submitted on September 28, 2001, and any amendments thereto.
**[45CSR§10-8.3.a, Batteries #1, #2, #3, and #8, Boilers #6, #7, and #8, #9 and #10, By-Product Plant]**

3.1.23 The owner or operator shall submit a periodic exception report to the Director, in a manner specified by the Director. Such an exception report shall provide details of all excursions outside the range of measured emissions or monitored parameters established in an approved monitoring plan and shall include, but not be limited to, the time of the excursion, the magnitude of the excursion, the duration of the excursion, the cause of the excursion and the corrective action taken. Compliance with this requirement is satisfied through compliance with the requirements of the approved 45CSR10 Monitoring Plan (Appendix A) submitted on September 28, 2001, and any amendments thereto.
**[45CSR§10-8.3.b, Batteries #1, #2, #3, and #8, Boilers #6, #7, and #8, #9 and #10, By-Product Plant]**

3.1.24. The owner or operator of a fuel burning unit(s) or a combustion source(s) shall maintain records of the operating schedule and the quantity and quality of fuel consumed in each unit in a manner specified by the Director. Such records are to be maintained on-site and made available to the Director or his duly authorized representative upon request. Compliance with this requirement is satisfied through compliance with the requirements of the approved 45CSR10 Monitoring Plan (Appendix A) submitted on September 28, 2001, and any amendments thereto.
**[45CSR§10-8.3.b, Batteries #1, #2, #3, and #8, Boilers #6, #7, and #8, #9 and #10, By-Product Plant]**

3.1.25. Due to unavoidable malfunction of equipment or inadvertent fuel shortages, emissions exceeding those provided for in this rule may be permitted by the Director for periods not to exceed ten (10) days upon specific application to the Director. Such application shall be made within twenty-four (24) hours of the equipment malfunction or fuel shortage. In cases of major equipment failure or extended shortages of conforming fuels, additional time periods may be granted by the Director provided a corrective program has been submitted by the owner or operator and approved by the Director.
**[45CSR§10-9.1., Batteries #1, #2, #3, and #8, Boilers #6, #7, and #8, #9 and #10, By-Product Plant]**

3.1.26. No person shall cause, suffer, allow, or permit the emission into open air from any source operation an in-stack sulfur dioxide concentration exceeding 2000 parts per million by volume (ppmv) from existing source operations, except as provided in subdivisions of 45CSR§10-4.1.

**[45CSR§10-4.1., Batteries #1, #2, #3, and #8, By-Product Plant]**

3.1.27. Total Allowable Emission Rates for Similar Units in Priority I and Priority II Regions -- No person shall cause, suffer, allow or permit the discharge of sulfur dioxide into the open air from all stacks located at one plant, measured in terms of pounds per hour, in excess of the amount determined as follows:

3.1.e. For Type 'b' and Type 'c' fuel burning units, the product of 3.1 and the total design heat inputs for such units discharging through those stacks in million BTU's per hour. **[45CSR§10-3.1., Boilers #6, #7, and #8, #9 and #10]**

3.1.28. No person shall cause, suffer, allow or permit the combustion of any refinery process gas stream or any other process gas stream that contains hydrogen sulfide in a concentration greater than 50 grains per 100 cubic feet of gas except in the case of a person operating in compliance with an emission control and mitigation plan approved by the Director and U. S. EPA. In certain cases very small units may be considered exempt from this requirement if, in the opinion of the Director, compliance would be economically unreasonable and if the contribution of the unit to the surrounding air quality could be considered negligible.
**[45CSR§10-5.1., Batteries #1, #2, #3, and #8, Boilers #6, #7, #9 and #10]**

3.1.29. Any owner or operator of a by-product coke production facility in existence on the effective date of 45CSR10 who can demonstrate to the Director that there is no practical alternative to scheduled maintenance (including shutdown) of desulfurization equipment may request the approval of an enforceable, temporary sulfur dioxide emissions control and mitigation plan for such maintenance period. In order for a plan under this paragraph to be approved the plan must meet the following conditions:

5.2.a. Provide that all feasible control measures and process changes will be employed at the coke production facility to reduce emissions of sulfur dioxide (including reduction of coke oven gas generation) during the control system outage.

5.2.b. Provide for a definitive reduction in sulfur dioxide emissions by the establishment of unit-specific allowable emission rates for all emissions units of the stationary source sufficient to prevent any violation of federal and state ambient air quality standards or applicable air quality increments for sulfur dioxide.

5.2.c. Provide that system down-time and excess sulfur dioxide emissions be reduced to the greatest extent possible by use of increased or contract maintenance personnel, maximized maintenance labor shifts and optimization of available spare parts inventories.

5.2.d. Provide for emissions and compliance monitoring as required by the Director in the approved plan during the maintenance periods and for the submission of reports of such monitoring and tests within time-frames specified by the Director in the approved plan. All approved plans shall require that a certified report of excess sulfur dioxide emissions from the by-product coke production facility and offsetting emission units be submitted to the Director within thirty (30) days after the end of the maintenance period.

5.2.e. Provide that no maintenance period exceed fourteen (14) days in length nor occur more than twice in any calendar year.

5.2.f. Provide at least two weeks notice of all scheduled maintenance periods, the anticipated length of the maintenance period, work to be completed, measures to be taken to minimize the length of desulfurization system down-time and such

other information as the Director may specify.

5.2.g. Provide for annual review, if necessary, modification or termination of the plan by the Director.

5.2.h. Provide that the Director may impose limitations on emission units that are more restrictive than those provided for in the plan as necessary to assure attainment of air quality standards for sulfur dioxide in light of data provided pursuant to 45CSR§10-5.2.f, or any other information available to the Director. **[45CSR§10-5.2., Batteries #1, #2, #3, and #8, Boilers #6, #7, and #8, #9 and #10]**

3.1.30. Compliance with the allowable hydrogen sulfide concentration limitations for combustion sources set forth in 45CSR10 shall be based on a block three (3) hour averaging time. **[45CSR§10-5.4., Batteries #1, #2, #3, and #8, Boilers #6, #7, #9 and #10]**

3.1.31. Due to unavoidable malfunction of equipment or inadvertent fuel shortages, emissions exceeding those provided for in 45CSR10 may be permitted by the Director for periods not to exceed ten (10) days upon specific application to the Director. Such application shall be made within twenty-four (24) hours of the equipment malfunction or fuel shortage. In cases of major equipment failure or extended shortages of conforming fuels, additional time periods may be granted by the Director provided a corrective program has been submitted by the owner or operator and approved by the Director. **[45CSR§10-9.1., Batteries #1, #2, #3, and #8, Boilers #6, #7, and #8, #9 and #10, By-Product Plant]**

3.1.32. Reserved.

3.1.33. Reserved.

3.1.34. Mineral acids shall not be released from any type source operation or duplicate source operation or from all air pollution control equipment installed on any type source operation or duplicate source operation in excess of the quantity given in Table 45-7B found at the end of 45CSR7. **[45CSR§7-4.2.]**

3.1.35. No person shall circumvent the provisions of 45CSR7 by adding additional gas to any exhaust or group of exhausts for the purpose of reducing the stack gas concentration. **[45CSR§7-4.3.]**

3.1.36. Potential Hazardous Material Emissions--Persons responsible for manufacturing process source operations from which hazardous particulate matter material may be emitted such as, but not limited to, lead, arsenic, beryllium and other such materials shall give the utmost care and consideration to the potential harmful effects of the emissions resulting from such activities. Evaluations of these facilities as to adequacy, efficiency and emission potential will be made on an individual basis by the Director working in conjunction with other appropriate governmental agencies. **[45CSR§7-4.13.]**

3.1.37. The permittee shall continuously maintain a system around this permitted facility to prevent the general public from accessing the facility. Permit R13-1939A was issued on August 19, 2003. **[45CSR13, R13-1939A, A.18.]**

## Monitoring Requirements

3.2.1. The permittee shall conduct monitoring/Record Keeping/reporting as follows. [Not required for open stockpiles, paved and unpaved roads and surfaces and activities regulated by 40 C.F.R. Part 63 Subpart L and Subpart CCCCC.]

a. Initially, the Method 22 test shall be performed once per week for fugitive particulate emission activities identified in Section 1.0. If no visible emissions are identified from the Method 22 during four (4) consecutive weeks, the emission checks need only be once per month. If visible emissions are identified from Method 22 at any test, then the permittee shall conduct an additional observation within 72-hours of the Method 22 using 45CSR7A to determine the opacity of the visible emissions being emitted from the fugitive particulate emission activities. Should the 45CSR7A observation indicate compliance, then this observation shall not compromise the Method 22 demonstration and shall be included in the count for four consecutive weeks. The permittee must start over with another four (4) consecutive weeks if visible emissions are detected that do not comply with 45CSR7 before going to monthly monitoring.

b. A record of each visible emissions observation shall be maintained, including any data required by 40 C.F.R. 60 Appendix A, Method 22 or 45CSR7A, whichever is appropriate. The record shall include, at a minimum, the date, time, name of the emission unit, the applicable visible emissions requirement, the results of the observation, and the name of the observer. Records shall be maintained on site for a period of no less than five (5) years stating any maintenance or corrective actions taken as a result of the weekly inspections, and the times the fugitive dust control system(s) are inoperable and any corrective actions taken.
**[45CSR§30-5.1.c.]**

3.2.2. a. Initially, the Method 22 test shall be performed once per week. If no visible emissions are identified from the Method 22 during four (4) consecutive weeks, the emission checks need only be once per month. If visible emissions are identified from Method 22 at any test, then the permittee shall conduct an additional observation within 72-hours of the Method 22 using 45CSR7A to determine the opacity of the visible emissions being emitted from the dust collectors. Should the 45CSR7A observation indicate compliance, then this observation shall not compromise the Method 22 demonstration and shall be included in the count for four consecutive weeks. The permittee must start over with another four (4) consecutive weeks if visible emissions are detected that do not comply with 45CSR7 before going to monthly monitoring.

b. Initially, the permittee shall conduct weekly visual emission observations on all dust collectors and the permitee shall maintain instrumentation on all dust collectors for pressure drop observations. The permittee shall maintain records of the maintenance performed on each baghouse. These records shall include all maintenance work performed on each dust collector including the frequency of bag/filter change outs. Records shall state the date and time of each dust collector inspection, the inspection results, and corrective action taken, if any. Records shall be maintained on site for five

(5) years from the record creation date. **[45CSR§30-5.1.c.]**

3.2.3. At the request of the Director the owner and/or operator of a source shall install such stack gas monitoring devices as the Director deems necessary to determine compliance with the provisions of 45CSR10. The data from such devices shall be readily available at the source location or such other reasonable location that the Director may specify. At the request of the Director, or his or her duly authorized representative, such data shall be made available for inspection or copying. Failure to promptly provide such data shall constitute a violation of 45CSR10.
**[45CSR§10-8.2.a., Batteries #1, #2, #3, and #8, Boilers #6, #7, ~~and~~ #8, #9 and #10, By-Product Plant]**

## Testing Requirements

3.3.1. **Stack testing.** As per provisions set forth in this permit or as otherwise required by the Secretary, in accordance with the West Virginia Code, underlying regulations, permits and orders, the permittee shall conduct test(s) to determine compliance with the emission limitations set forth in this permit and/or established or set forth in underlying documents. The Secretary, or his duly authorized representative, may at his option witness or conduct such test(s). Should the Secretary exercise his option to conduct such test(s), the operator shall provide all necessary sampling connections and sampling ports to be located in such manner as the Secretary may require, power for test equipment and the required safety equipment, such as scaffolding, railings and ladders, to comply with generally accepted good safety practices. Such tests shall be conducted in accordance with the methods and procedures set forth in this permit or as otherwise approved or specified by the Secretary in accordance with the following:

a. The Secretary may on a source-specific basis approve or specify additional testing or alternative testing to the test methods specified in the permit for demonstrating compliance with 40 C.F.R. Parts 60, 61, and 63 in accordance with the Secretary's delegated authority and any established equivalency determination methods which are applicable. If a testing method is specified or approved which effectively replaces a test method specified in the permit, the permit will be revised in accordance with 45CSR§30-6.4. or 45CSR§30-6.5 as applicable.

b. The Secretary may on a source-specific basis approve or specify additional testing or alternative testing to the test methods specified in the permit for demonstrating compliance with applicable requirements which do not involve federal delegation. In specifying or approving such alternative testing to the test methods, the Secretary, to the extent possible, shall utilize the same equivalency criteria as would be used in approving such changes under Section 3.3.1.a. of this permit. If a testing method is specified or approved which effectively replaces a test method specified in the permit, the permit will be revised in accordance with 45CSR§30-6.4. or 45CSR§30-6.5 as applicable.

c. All periodic tests to determine mass emission limits from or air pollutant concentrations in discharge stacks and such other tests as specified in this permit shall be conducted in accordance with an approved test protocol. Unless previously approved, such protocols shall be submitted to the Secretary in writing at least thirty (30) days prior to any testing and shall contain the information set forth by the Secretary. In addition, the permittee shall notify the Secretary at least fifteen (15) days prior to any testing so the Secretary may have the opportunity to observe such tests. This notification shall include the actual date and time during which the test will be conducted and, if appropriate, verification that the tests will fully conform to a referenced protocol previously approved by the Secretary. **[WV Code § 22-5-4(a)(15)]**

3.3.2. Compliance with all total particulate matter mass emission standards under Regulation 2 (45 CSR

2), Regulation 7 (45 CSR 7), and CO-SIP-91-29 shall be demonstrated in accordance with test procedures set forth in TP-2 - "Compliance Test Procedures for Regulation 2 - 'To Prevent and Control Particulate Air Pollution From Combustion of Fuel in Indirect Heat Exchangers'", and 45 CSR 7A (TP-4) - "Compliance Test Procedures for Regulation 7 - 'To Prevent and Control Particulate Air Pollution From Manufacturing Process Operations'", except as follows:

a. Particulate mass emission tests for process emission sources subject to Regulation 7 (45 CSR 7) and CO-SIP-91-29 shall be conducted only in accordance with 40 CFR 60, Appendix A, Methods 1 through 5 unless alternative procedures or procedural variances are approved by the Director and USEPA.

b. All minor exceptions and variances to the test procedures set forth in TP-2 shall be approved by the Director and all alternative procedures and procedural variances shall be approved by the Director and USEPA. **[CO-SIP-91-29, Section IV., 1.]**

3.3.3. Compliance with all $PM_{10}$ mass emission standards under CO-SIP-91-29 shall be demonstrated in accordance with test procedures set forth in 40 CFR 51, Appendix M, Methods 201, 201A and 202 or as approved by WV DEP.
**[CO-SIP-91-29, Section IV., 2.]**

3.3.4. The Company shall submit a test protocol as required by TP-2 and 45 CSR 7A (TP-4) at least thirty (30) days prior to any test to determine compliance with the provisions of CO-SIP-91-29 or Commission regulations and shall notify the Director of the dates of all such compliance tests at least fifteen (15) days prior to testing.
**[CO-SIP-91-29, Section IV., 3.]**

3.3.5. Compliance with the visible emissions standards of Regulation 2 (45 CSR 2) and any visible emission limitations established in CO-SIP-91-29 shall be determined by observers certified in accordance with 40 CFR 60, Appendix A, Method 9 and following the observation procedures of Method 9. In determining compliance with the visible emission standards under 45CSR2 and any visible emissions limitations established in CO-SIP-91-29, each visible emission observation shall represent a fifteen (15) second period and visible emission observations shall not be averaged.
**[CO-SIP-91-29, Section IV., 4.]**

3.3.6. Prior to the installation of calibrated stack gas monitoring devices, sulfur dioxide emission rates shall be calculated on an equivalent fuel sulfur content basis.
**[45CSR§10-8.2.b, Batteries #1, #2, #3, and #8, Boilers #6, #7, and #8, #9 and #10]**

3.3.7. At such reasonable times as the Director may designate, the owner or operator of any fuel burning unit(s), manufacturing process source(s) or combustion source(s) may be required to conduct or have conducted tests to determine the compliance of such source(s) with the emission limitations of 45CSR10 sections 3, 4 or 5. Such tests shall be conducted in accordance with the appropriate test method set forth in 40 C.F.R. Part 60, Appendix A, Method 6, Method 15 or other equivalent EPA testing method approved by the Director. The Director, or his or her duly authorized representative, may at his or her option witness or conduct such tests. Should the Director exercise his or her option to conduct such tests, the operator will provide all necessary sampling connections and sampling ports to be located in such manner as the Director may require, power for test equipment, and the required safety equipment such as scaffolding, railings, and ladders to

comply with generally accepted good safety practices.
**[45CSR10-8.1.a., Batteries #1, #2, #3, and #8, Boilers #6, #7, and #8, #9 and #10, By-Product Plant]**

3.3.8. The Director, or his duly authorized representative, may conduct such other tests as he or she may deem necessary to evaluate air pollution emissions other than those noted in section 3 of 45CSR10.
**[45CSR§10-8.1.b., Batteries #1, #2, #3, and #8, Boilers #6, #7, and #8, #9 and #10, By-Product Plant]**

## Recordkeeping Requirements

3.4.1. **Monitoring information.** The permittee shall keep records of monitoring information that include the following:

a. The date, place as defined in this permit and time of sampling or measurements;
b. The date(s) analyses were performed;
c. The company, person or entity that performed the analyses;
d. The analytical techniques or methods used;
e. The results of the analyses; and
f. The operating conditions existing at the time of sampling or measurement.

**[45CSR§30-5.1.c.2.A.]**

3.4.2. **Retention of records.** The permittee shall retain records of all required monitoring data and support information for a period of at least five (5) years from the date of monitoring sample, measurement, report, application, or record creation date. Support information includes all calibration and maintenance records and all original strip-chart recordings for continuous monitoring instrumentation, and copies of all reports required by the permit. Where appropriate, records may be maintained in computerized form in lieu of the above records.
**[45CSR§30-5.1.c.2.B.]**

3.4.3. **Odors.** For the purposes of 45CSR4, the permittee shall maintain a record of all odor complaints received. Such record shall contain an assessment of the validity of the complaints as well as any corrective actions taken.
**[45CSR§30-5.1.c. State-Enforceable only.]**

3.4.4. In accordance with ~~Wheeling-Pittsburgh Steel~~ the permittee's 45CSR10 Monitoring Plan that was submitted on September 28, 2001, ~~Wheeling-Pittsburgh Steel~~ permittee will maintain sulfur content statements on-site for a period of at least five (5) years in accordance with 45CSR10A, Section 7. ~~Wheeling-Pittsburgh Steel~~ The permittee will submit a "Monitoring Summary Report" and an "Excursion and Monitoring Plan Performance Report" on a quarterly basis to the Director by the 30th day of the month following the calendar quarter. ~~Wheeling-Pittsburgh Steel~~ The permittee's 45CSR10 Monitoring Plan is attached in Appendix A.
**[45CSR§10-8.3., Batteries #1, #2, #3, and #8, Boilers #6, #7, and #8, #9 and #10, By-Product Plant]**

## Reporting Requirements

3.5.1. **Responsible official.** Any application form, report, or compliance certification required by this permit to be submitted to the DAQ and/or USEPA shall contain a certification by the responsible official that states that, based on information and belief formed after reasonable inquiry, the statements and information in the document are true, accurate and complete.
**[45CSR§§30-4.4. *and* 5.1.c.3.D.]**

3.5.2. A permittee may request confidential treatment for the submission of reporting required under 45CSR§30-5.1.c.3. pursuant to the limitations and procedures of W.Va. Code § 22-5-10 and 45CSR31.
**[45CSR§30-5.1.c.3.E.]**

3.5.3. All notices, requests, demands, submissions and other communications required or permitted to be made to the Secretary of DEP and/or USEPA shall be made in writing and shall be deemed to have been duly given when delivered by hand, or mailed first class with postage prepaid to the address(es) set forth below or to such other person or address as the Secretary of the Department of Environmental Protection may designate:

**If to the DAQ:**

Director
WVDEP
Division of Air Quality
7012 MacCorkle Avenue, SE
Charleston, WV 25304-2943

Phone: 304/926-3727
FAX: 304/926-3739

**If to the US EPA:**

Associate Director
Office of Enforcement and Permits Review (3AP12)
U. S. Environmental Protection Agency
Region III
1650 Arch Street
Philadelphia, PA 19103-2029

3.5.4. **Certified emissions statement.** The permittee shall submit a certified emissions statement and pay fees on an annual basis in accordance with the submittal requirements of the Division of Air Quality. A receipt for the appropriate fee shall be maintained on the premises for which the receipt has been issued, and shall be made immediately available for inspection by the Secretary or his/her duly authorized representative. The certified emissions statement and pay fees are to be submitted on July 1 of each year unless directed by DAQ.
**[45CSR§30-8.]**

3.5.5. **Compliance certification.** The permittee shall certify compliance with the conditions of this permit on the forms provided by the DAQ. In addition to the annual compliance certification, the

permittee may be required to submit certifications more frequently under an applicable requirement of this permit. The annual certification shall be submitted to the DAQ and USEPA on or before March 15 of each year, and shall certify compliance for the period ending December 31. The permittee shall maintain a copy of the certification on site for five (5) years from submittal of the certification.
**[45CSR§30-5.3.e.]**

3.5.6. **Semi-annual monitoring reports.** The permittee shall submit reports of any required monitoring on September 15 for the reporting period January 1 to June 30 and March 15 for the reporting period July 1 to December 31. All instances of deviation from permit requirements must be clearly identified in such reports. All required reports must be certified by a responsible official consistent with 45CSR§30-4.4.
**[45CSR§30-5.1.c.3.A.]**

3.5.7. **Emergencies.** For reporting emergency situations, refer to Section 2.17 of this permit.

3.5.8. **Deviations.**

a. In addition to monitoring reports required by this permit, the permittee shall promptly submit supplemental reports and notices in accordance with the following:

1. Any deviation resulting from an emergency or upset condition, as defined in 45CSR§30-5.7., shall be reported by telephone or telefax within one (1) working day of the date on which the permittee becomes aware of the deviation, if the permittee desires to assert the affirmative defense in accordance with 45CSR§30-5.7. A written report of such deviation, which shall include the probable cause of such deviations, and any corrective actions or preventative measures taken, shall be submitted and certified by a responsible official within ten (10) days of the deviation.

2. Any deviation that poses an imminent and substantial danger to public health, safety, or the environment shall be reported to the Secretary immediately by telephone (1-800-642-3074) or telefax (Section 3.5.3.). A written report of such deviation, which shall include the probable cause of such deviation, and any corrective actions or preventative measures taken, shall be submitted by the responsible official within ten (10) days of the deviation.

3. Deviations for which more frequent reporting is required under this permit shall be reported on the more frequent basis.

4. All reports of deviations shall identify the probable cause of the deviation and any corrective actions or preventative measures taken.

**[45CSR§30-5.1.c.3.C.]**

b. The permittee shall, in the reporting of deviations from permit requirements, including those attributable to upset conditions as defined in this permit, report the probable cause of such deviations and any corrective actions or preventive measures taken in accordance with any rules of the Secretary.
**[45CSR§30-5.1.c.3.B.]**

c. Every report submitted under this subsection shall be certified by a responsible official.
**[45CSR§30.5.1.c.3.D.]**

3.5.9. **New applicable requirements.** If any applicable requirement is promulgated during the term of this permit, the permittee will meet such requirements on a timely basis, or in accordance with a more detailed schedule if required by the applicable requirement.
**[45CSR§30-4.3.h.1.B.]**

# ATTACHMENT J

## Source Specific Requirements for Batteries 1, 2, 3, and 8

(Reserved)

(Reserved)

4.1.1.a The permitted facility must be constructed and operated in accordance with information filed in Permit Application No. 90. The Director may suspend or revoke a permit if the plans and specifications upon which the approval was based are not adhered to. *(P004)* **[45CSR13, R13-0090]**

4.1.1b The total combined emissions vented through Emission Point 1E shall be limited to the pollutants and associated emission rates shown in the following table 4.1.1:

| Pollutant | Emission Limits | |
|---|---|---|
| | Hourly (lbs/hr) | Annual (tons/yr) |
| PM | 36.8 | 161.0 |
| PM10 | 3.6 | 15.8 |
| PM2.5 | 2.2 | 9.8 |
| Lead | 0.0004 | 0.002 |

1-All PM emission rates based on AP-42 Emission Factors (Table 12.2-12, 5/2008)

For P001-6, compliance with all annual limits set forth within this permit shall be determined using a twelve month rolling total. A twelve month rolling total shall mean the sum of the measured operating parameter at any given time during the previous twelve (12) consecutive calendar months.

4.1.2. On and after the date of entry of CO-SIP-91-29 dated November 14, 1991, total particulate matter which includes $PM_{10}$ emissions from all exhaust vent(s) on the baghouse (CO1) controlling pushing emissions from Coke Oven Batteries 1, 2 and 3 shall not exceed 2.14 lb/hr.
**[CO-SIP-91-29, Section III.3., P001-5]**

4.1.3. Total particulate matter and $PM_{10}$ emissions from coke oven battery combustion stacks shall not exceed the following limitations:

| Stack ID | Total Particulate in (lb/hr) | $PM_{10}$ in (lb/hr) |
|---|---|---|
| No. 1 Battery (Stack 05) | 1.40 | 1.35 |
| No. 2 Battery (Stack 05) | 1.40 | 1.35 |
| No. 3 Battery (Stack 05) | 1.58 | 1.52 |
| No. 8 Battery (Stack 06) | 6.93 | 6.65 |

**[CO-SIP-91-29, Section III.4.A.]**

4.1.4. Compliance with the emission limitations of Section 4.1.3. [Section III.4.A.] shall be achieved on and after November 14, 1991.
**[CO-SIP-91-29, Section III.4.B.]**

4.1.5. Except as provided in 40 C.F.R. §§ 63.304 (b)(4), (b)(5), and (b)(7) and in 40 C.F.R. §63.305, on and after the dates specified below, no owner or operator shall cause to be discharged or allow to be discharged to the atmosphere coke oven emissions from a by-product coke oven battery that exceed any of the following emission limitations:

(2) On and after January 1, 1998;

(i) For coke oven doors:

(A) 4.3 percent leaking coke oven doors for each tall by-product coke oven battery and for each by-product coke oven battery owned or operated by a foundry coke producer, as determined by the procedures in Section 4.3.3. (1) [40 C.F.R. § 63.309(d)(1)]; and

(B) 3.8 percent leaking coke oven doors on each by-product coke oven battery not subject to the emission limitation in Section 4.1.5. (2)(i)(A) [40 C.F.R. § 63.304 (b)(2)(i)(A)], as determined by the procedures in Section 4.3.3. (1) [40 C.F.R. § 63.309(d)(1)];

(ii) 0.4 percent leaking topside port lids, as determined by the procedures in Section 4.3.3. (1) [40 C.F.R. § 63.309(d)(1)];

(iii) 2.5 percent leaking offtake system(s), as determined by the procedures in Section 4.3.3. (1) [40 C.F.R. § 63.309(d)(1)]; and

(iv) 12 seconds of visible emissions per charge, as determined by the procedures in Section 4.3.3. (2) [40 C.F.R. § 63.309(d)(2)].

(3) On and after January 1, 2010, unless the Administrator promulgates more stringent limits pursuant to section 112(i)(8)(C) of the Clean Air Act;

(i) 4.0 percent leaking coke oven doors on each tall by-product coke oven battery and for each by-product coke oven battery owned or operated by a foundry coke producer, as determined by the procedures in Section 4.3.3. (1) [40 C.F.R. § 63.309(d)(1)]; and

(ii) 3.3 percent leaking coke oven doors for each by-product coke oven battery not subject to the emission limitation in Section 4.1.5. (3)(i) [40 C.F.R. § 63.304 (b)(3)(i)], as determined by the procedures in Section 4.3.3. (1) [40 C.F.R. § 63.309(d)(1)].

**[45CSR34, 40 C.F.R. § 63.304 (b)]**

4.1.6. *Work practice plan.* The permittee shall implement the submitted work practice plan to achieve compliance with the applicable visible emission limitations.

(2) The Administrator may require revisions to the initial plan only where the Administrator finds either that the plan does not address each subject area listed in Section 4.1.7. [40 C.F.R. § 63.306 (b)] of for each emission point subject to a visible emission standard under 40 C.F.R. Part 63 Subpart L, or that the plan is unenforceable because it contains requirements that are unclear.

(3) During any period of time that an owner or operator is required to implement the provisions of a plan for a particular emission point, the failure to implement one or more obligations under the plan and/or any recordkeeping requirement(s) under Section 4.4.1. (4) [40 C.F.R. § 63.311(f)(4)] for the emission point during a particular day is a single violation.

**[45CSR34, 40 C.F.R. § 63.306 (a)]**

4.1.7. *Plan components.* The owner or operator shall organize the work practice plan to indicate clearly which parts of the plan pertain to each emission point subject to visible emission standards under 40 C.F.R. Part 63 Subpart L. Each of the following provisions, at a minimum, shall be addressed in the plan:

(1) An initial and refresher training program for all coke plant operating personnel with responsibilities that impact emissions, including contractors, in job requirements related to emission control and the requirements of 40 C.F.R. Part 63 Subpart L, including work practice requirements. Contractors with responsibilities that impact emission control may be trained by the owner or operator or by qualified contractor personnel; however, the owner or operator shall ensure that the contractor training program complies with the requirements of this section. The training program in the plan must include:

(i) A list, by job title, of all personnel that are required to be trained and the emission point(s) associated with each job title;

(ii) An outline of the subjects to be covered in the initial and refresher training for each group of personnel;

(iii) A description of the training method(s) that will be used (e.g., lecture, video tape);

(iv) A statement of the duration of initial training and the duration and frequency of refresher training;

(v) A description of the methods to be used at the completion of initial or refresher training to demonstrate and document successful completion of the initial and refresher training; and

(vi) A description of the procedure to be used to document performance of plan requirements pertaining to daily operation of the coke oven battery and its emission control equipment, including a copy of the form to be used, if applicable, as required under the plan provisions implementing Section 4.1.7. (7) [40 C.F.R. § 63.306 (b) (7)].

(2) Procedures for controlling emissions from coke oven doors on by-product coke oven batteries, including:

(i) A program for the inspection, adjustment, repair, and replacement of coke oven doors and jambs, and any other equipment for controlling emissions from coke oven doors, including a defined frequency of inspections, the method to be used to evaluate conformance with operating specifications for each type of equipment, and the method to be used to audit the effectiveness of the inspection and repair program for preventing exceedances;

(ii) Procedures for identifying leaks that indicate a failure of the emissions control equipment to function properly, including a clearly defined chain of command for communicating information on leaks and procedures for corrective action;

(iii) Procedures for cleaning all sealing surfaces of each door and jamb, including identification of the equipment that will be used and a

specified schedule or frequency for the cleaning of sealing surfaces;

(iv) For batteries equipped with self-sealing doors, procedures for use of supplemental gasketing and luting materials, if the owner or operator elects to use such procedures as part of the program to prevent exceedances;

(v) For batteries equipped with hand-luted doors, procedures for luting and reluting, as necessary to prevent exceedances;

(vi) Procedures for maintaining an adequate inventory of the number of spare coke oven doors and jambs located onsite; and

(vii) Procedures for monitoring and controlling collecting main back pressure, including corrective action if pressure control problems occur.

(3) Procedures for controlling emissions from charging operations on by-product coke oven batteries, including:

(i) Procedures for equipment inspection, including the frequency of inspections, and replacement or repair of equipment for controlling emissions from charging, the method to be used to evaluate conformance with operating specifications for each type of equipment, and the method to be used to audit the effectiveness of the inspection and repair program for preventing exceedances;

(ii) Procedures for ensuring that the larry car hoppers are filled properly with coal;

(iii) Procedures for the alignment of the larry car over the oven to be charged;

(iv) Procedures for filling the oven (e.g., procedures for staged or sequential charging);

(v) Procedures for ensuring that the coal is leveled properly in the oven; and

(vi) Procedures and schedules for inspection and cleaning of offtake systems (including standpipes, standpipe caps, goosenecks, dampers, and mains), oven roofs, charging holes, topside port lids, the steam supply system, and liquor sprays.

(4) Procedures for controlling emissions from topside port lids on by-product coke oven batteries, including:

(i) Procedures for equipment inspection and replacement or repair of topside port lids and port lid mating and sealing surfaces, including the frequency of inspections, the method to be used to evaluate conformance with operating specifications for each type of equipment, and the method to be used to audit the effectiveness of the inspection and repair program for preventing exceedances; and

(ii) Procedures for sealing topside port lids after charging, for identifying topside port lids that leak, and procedures for resealing.

(5) Procedures for controlling emissions from offtake system(s) on by-product coke oven batteries, including:

(i) Procedures for equipment inspection and replacement or repair of offtake system components, including the frequency of inspections, the method to be used to evaluate conformance with operating specifications for each type of equipment, and the method to be used to audit the effectiveness of the inspection and repair program for preventing exceedances;

(ii) Procedures for identifying offtake system components that leak and procedures for sealing leaks that are detected; and

(iii) Procedures for dampering off ovens prior to a push.

(7) Procedures for maintaining, for each emission point subject to visible emission limitations under 40 C.F.R. Part 63 Subpart L, a daily record of the performance of plan requirements pertaining to the daily operation of the coke oven battery and its emission control equipment, including:

(i) Procedures for recording the performance of such plan requirements; and

(ii) Procedures for certifying the accuracy of such records by the owner or operator.

(8) Any additional work practices or requirements specified by the Administrator according to Section 4.1.9. [40 C.F.R. § 63.306 (d)].

**[45CSR34, 40 C.F.R. § 63.306 (b)]**

4.1.8. *Implementation of work practice plans.* On and after November 15, 1993, the owner or operator of a coke oven battery shall implement the provisions of the coke oven emission control work practice plan according to the following requirements:

(1) The owner or operator of a coke oven battery subject to visible emission limitations under 40 C.F.R. Part 63 Subpart L on and after November 15, 1993, shall:

(i) Implement the provisions of the work practice plan pertaining to a particular emission point following the second independent exceedance of the visible emission limitation for the emission point in any consecutive 6-month period, by no later than 3 days after receipt of written notification of the second such exceedance from the certified observer. For the purpose of Section 4.1.8. (1)(i) [40 C.F.R. § 63.306 (c)(1)(i)], the second exceedance is "independent" if either of the following criteria is met:

(A) The second exceedance occurs 30 days or more after the first exceedance;

(B) In the case of coke oven doors, topside port lids, and offtake systems, the 29-run average, calculated by excluding the highest value in the 30-day period, exceeds the value of the applicable emission limitation; or

(C) In the case of charging emissions, the 29-day logarithmic average, calculated in accordance with Method 303 in appendix A to 40 C.F.R. 63 by excluding the valid daily set of observations in the 30-day period that had the highest arithmetic average, exceeds the value of the applicable emission limitation.

(i) Continue to implement such plan provisions until the visible emission limitation for the emission point is achieved for 90 consecutive days if work practice requirements are implemented pursuant to Section 4.1.8. (1)(i) [40 C.F.R. § 63.306 (c)(1)(i)]. After the visible emission limitation for a particular emission point is achieved for 90 consecutive days, any exceedances prior to the beginning of the 90 days are not included in making a determination under Section 4.1.8. (1)(i) [40 C.F.R. § 63.306 (c)(1)(i)].

**[45CSR34, 40 C.F.R. § 63.306 (c)]**

4.1.9. *Revisions to plan.* Revisions to the work practice emission control plan will be governed by the provisions in this Section 4.1.9. and Section 4.1.6. (2) [40 C.F.R. § 63.306 (d) and (a)(2)].

(1) The Administrator may request the owner or operator to review and revise as needed the work practice emission control plan for a particular emission point if there are 2 exceedances of the applicable visible emission limitation in the 6-month period that starts 30 days after the owner or operator is required to implement work practices under Section 4.1.8. [40 C.F.R. § 63.306 (c)]. In the case of a coke oven battery subject to visual emission limitations under 40 C.F.R. Part 63 Subpart L, the second exceedance must be independent under the criteria in Section 4.1.8. (1)(i) [40 C.F.R. § 63.306 (c)(1)(i)].

(2) The Administrator may not request the owner or operator to review and revise the plan more than twice in any 12 consecutive month period for any particular emission point unless the Administrator disapproves the plan according to the provisions in Section 4.1.9. (6) [40 C.F.R. § 63.306 (d)(6)].

(3) If the certified observer calculates that a second exceedance (or, if applicable, a second independent exceedance) has occurred, the certified observer shall notify the owner or operator. No later than 10 days after receipt of such a notification, the owner or operator shall notify the Administrator of any finding of whether work practices are related to the cause or the solution of the problem. This notification is subject to review by the Administrator according to the provisions in Section 4.1.9. (6) [40 C.F.R. § 63.306 (d)(6)].

(4) The owner or operator shall submit a revised work practice plan within 60 days of notification from the Administrator under Section 4.1.9. (1) [40 C.F.R. § 63.306 (d)(1)], unless the Administrator grants an extension of time to submit the revised plan.

(5) If the Administrator requires a plan revision, the Administrator may require the plan to address a subject area or areas in addition to those in Section 4.1.9. [40 C.F.R. § 63.306 (d)], if the Administrator determines that without plan coverage of such an additional subject area, there is a reasonable probability of further exceedances of the visible emission limitation for the emission point for which a plan revision is required.

(6) The Administrator may disapprove a plan revision required under in Section 4.1.9. [40 C.F.R. § 63.306 (d)] if the Administrator determines that the revised plan is inadequate to prevent exceedances of the visible emission limitation under 40 C.F.R. Part 63 Subpart L for the emission point for which a plan revision is required or, in the case of a battery not subject to visual emission limitations under 40 C.F.R. Part 63 Subpart L, other federally enforceable emission limitations for such emission point. The Administrator may also disapprove the finding that may be submitted pursuant to in Section 4.1.9. (3) [40 C.F.R. § 63.306 (d)(3)] if the Administrator determines that a revised plan is needed to prevent exceedances of the applicable visible emission limitations.

**[45CSR34, 40 C.F.R. § 63.306 (d)]**

4.1.10. Coke oven emissions shall not be vented to the atmosphere through bypass/bleeder stacks, except through the flare system
**[45CSR34, 40 C.F.R. § 63.307 (a)(2)]**

4.1.11. Each flare installed pursuant to this section shall meet the following requirements:

(1) Each flare shall be designed for a net heating value of 8.9 MJ/scm (240 Btu/scf) if a flare is steam-assisted or air-assisted, or a net value of 7.45 MJ/scm (200 Btu/scf) if the flare is non-assisted.

(2) Each flare shall have either a continuously operable pilot flame or an electronic igniter that meets the requirements of in Section 4.1.11. (3) [40 C.F.R. § 63.307 (b)(4)].

(4) Each flare installed to meet the requirements of Section 4.1.11. [40 C.F.R. § 63.307 (b)] that does not have an electronic igniter shall be operated with a pilot flame present at all times as determined by Section 4.3.6. (2) [40 C.F.R. § 63.309(h)(2)].

**[45CSR34, 40 C.F.R. § 63.307 (b)]**

4.1.12. Each flare installed to meet the requirements of Section 4.1.10 to 4.1.13. [40 C.F.R. § 63.307] shall be operated with no visible emissions, as determined by the methods specified in Section 4.3.6. (1) [40 C.F.R. § 63.309(h)(1)], except for periods not to exceed a total of 5 minutes during any 2 consecutive hours.
**[45CSR34, 40 C.F.R. § 63.307 (c)]**

4.1.13. Any emissions resulting from the installation of flares shall not be used in making new source review determinations under part C and part D of title I of the Clean Air Act.
**[45CSR34, 40 C.F.R. § 63.307 (f)]**

4.1.14. On and after November 15, 1993, the owner or operator of a by-product coke oven battery shall inspect the collecting main for leaks at least once daily according to the procedures in Method 303 in appendix A to 40 C.F.R Part 63.
**[45CSR34, 40 C.F.R. § 63.308 (a)]**

4.1.15. The owner or operator shall record the time and date a leak is first observed, the time and date the leak is temporarily sealed, and the time and date of repair.
**[45CSR34, 40 C.F.R. § 63.308 (b)]**

4.1.16. The owner or operator shall temporarily seal any leak in the collecting main as soon as

possible after detection, but no later than 4 hours after detection of the leak.
**[45CSR34, 40 C.F.R. § 63.308 (c)]**

4.1.17. The owner or operator shall initiate a collecting main repair as expeditiously as possible, but no later than 5 calendar days after initial detection of the leak. The repair shall be completed within 15 calendar days after initial detection of the leak unless an alternative schedule is approved by the Administrator.
**[45CSR34, 40 C.F.R. § 63.308 (d)]**

4.1.18. At all times including periods of startup, shutdown, and malfunction, the owner or operator shall operate and maintain the coke oven battery and its pollution control equipment required under 40 C.F.R. Part 63 Subpart
L, in a manner consistent with good air pollution control practices for minimizing emissions to the levels required by any applicable performance standards under 40 C.F.R. Part 63 Subpart L. Failure to adhere to the requirement of this paragraph shall not constitute a separate violation if a violation of an applicable performance or work practice standard has also occurred.
**[45CSR34, 40 C.F.R. § 63.310 (a)]**

4.1.19. Each owner or operator of a coke oven battery shall develop and implement according to Section 4.1.20. [40 C.F.R. § 63.310 (c)], a written startup, shutdown, and malfunction plan that describes procedures for operating the battery, including associated air pollution control equipment, during a period of a startup, shutdown, or malfunction in a manner consistent with good air pollution control practices for minimizing emissions, and procedures for correcting malfunctioning process and air pollution control equipment as quickly as practicable.
**[45CSR34, 40 C.F.R. § 63.310 (b)]**

4.1.20. During a period of startup, shutdown, or malfunction:

(1) The owner or operator of a coke oven battery shall operate the battery (including associated air pollution control equipment) in accordance with the procedure specified in the startup, shutdown, and malfunction plan; and

(2) Malfunctions shall be corrected as soon as practicable after their occurrence, in accordance with the plan.

**[45CSR34, 40 C.F.R. § 63.310 (c)]**

4.1.21. In order for the provisions of Section 4.1.26. [40 C.F.R. § 63.310 (i)] to apply with respect to the observation (or set of observations) for a particular day, notification of a startup, shutdown, or a malfunction shall be made by the owner or operator:

(1) If practicable, to the certified observer if the observer is at the facility during the occurrence; or

(2) To the enforcement agency, in writing, within 24 hours of the occurrence first being documented by a company employee, and if the notification under Section 4.1.21. (1) [40 C.F.R. § 63.310 (d)(1)] was not made, an explanation of why no such notification was made.

**[45CSR34, 40 C.F.R. § 63.310 (d)]**

4.1.22. Within 14 days of the notification made under Section 4.1.21. [40 C.F.R. § 63.310 (d)], or after a startup or shutdown, the owner or operator shall submit a written report to the applicable permitting authority that:

(1) Describes the time and circumstances of the startup, shutdown, or malfunction; and

(2) Describes actions taken that might be considered inconsistent with the startup, shutdown, or malfunction plan.

**[45CSR34, 40 C.F.R. § 63.310 (e)]**

4.1.23. The owner or operator shall maintain a record of internal reports which form the basis of each malfunction notification under Section 4.1.21. [40 C.F.R. § 63.310 (d)].
**[45CSR34, 40 C.F.R. § 63.310 (f)]**

4.1.24. To satisfy the requirements of Section 4.1.18 to 4.1.26. [40 C.F.R. § 63.310.] to develop a startup, shutdown, and malfunction plan, the owner or operator may use the standard operating procedures manual for the battery, provided the manual meets all the requirements for Section 4.1.18 to 4.1.26. [40 C.F.R. § 63.310.] and is made available for inspection at reasonable times when requested by the Administrator.
**[45CSR34, 40 C.F.R. § 63.310 (g)]**

4.1.25. The Administrator may require reasonable revisions to a startup, shutdown, and malfunction plan, if the Administrator finds that the plan:

(1) Does not address a startup, shutdown, or malfunction event that has occurred;

(2) Fails to provide for the operation of the source (including associated air pollution control equipment) during a startup, shutdown, or malfunction event in a manner consistent with good air pollution control practices for minimizing emissions; or

(3) Does not provide adequate procedures for correcting malfunctioning process and/or air pollution control equipment as quickly as practicable.

**[45CSR34, 40 C.F.R. § 63.310 (h)]**

4.1.26. If the owner or operator demonstrates to the satisfaction of the Administrator that a startup, shutdown, or malfunction has occurred, then an observation occurring during such startup, shutdown, or malfunction shall not:

(1) Constitute a violation of relevant requirements of 40 C.F.R. Part 63 Subpart L;

(2) Be used in any compliance determination under Section 4.3.1. through 4.3.7. [40 C.F.R. § 63.309]; or

(3) Be considered for purposes of Section 4.1.6. through 4.1.9. [40 C.F.R.§ 63.306], until the Administrator has resolved the claim that a startup, shutdown, or malfunction has occurred. If the Administrator determines that a startup, shutdown, or malfunction has not occurred, such observations may be used for purposes of Section 4.1.6. through 4.1.9. [40 C.F.R.§ 63.306], regardless of whether the owner or operator further contests such determination. The owner's or operator's receipt of written notification from the Administrator that a startup, shutdown, or malfunction has not occurred will serve, where applicable under Section 4.1.6. through 4.1.9. [40 C.F.R.§ 63.306], as written notification from the certified observer that an exceedance has occurred.

**[45CSR34, 40 C.F.R. § 63.310 (i)]**

4.1.27. The owner or operator shall comply with all applicable State implementation plan emission limits and (subject to any expiration date) all federally enforceable emission limitations which are contained in an order, decree, permit, or settlement agreement for the control of emissions from offtake systems, topside port lids, coke oven doors, and charging operations in effect on September 15, 1992.
**[45CSR34, 40 C.F.R. § 63.312 (a)]**

4.1.28. Nothing in 40 C.F.R. Part 63 Subpart L shall affect the enforcement of such State implementation plan emission limitations (or, subject to any expiration date, such federally enforceable emission limitations contained in an order, decree, permit, or settlement agreement) in effect on September 15, 1992.
**[45CSR34, 40 C.F.R. § 63.312 (b)]**

4.1.29. Except as specified in Section 4.1.13. [40 C.F.R. § 63.307(f)], nothing in 40 C.F.R. Part 63 Subpart L shall limit or affect any authority or obligation of Federal, State, or local agencies to establish emission limitations or other requirements more stringent than those specified in 40 C.F.R. Part 63 Subpart L.
**[45CSR34, 40 C.F.R. § 63.312 (d)]**

4.1.30. Except as provided in Sec. 6302 (c), section 112 (g) of the Clean Act shall not apply to sources subject to 40 C.F.R. Part 63 Subpart L.
**[45CSR34, 40 C.F.R. § 63.312 (e)]**

4.1.31. Existing By-Product Coke Production Facility--No person shall cause, suffer, allow or permit the emission of smoke and/or particulate matter into the open air in excess of the following provisions from the operation of a by-product coke production facility in production on the effective date of 45CSR7 or a by-product coke production facility which is constructed as a replacement for a by-product coke production facility which shut down not more than three (3) years prior to the effective date of 45CSR7:

a. Charging emissions from charging of any four consecutive ovens shall not exceed an aggregate time of more than one hundred (100) seconds.

b. Pushing emissions from pushing shall be vented into air pollution control equipment. Particulate matter emissions discharged from this air pollution control equipment shall not exceed a mass particulate rate as determined by the following formula:

$$E=C^{.09}$$

Where E = particulate matter emissions rate in pounds per push and C = actual charge of coal in tons per oven.

b.1. The smoke and/or particulate matter emissions discharged from this air pollution control equipment and noncaptured pushing emissions shall not exceed twenty percent (20%) opacity.

c. Transport emissions from an open quench car shall not exceed ten percent (10%) opacity.

d. Coke side sheds and similar structures used to capture pushing emissions shall be designed and operated so as to prevent the escape of smoke and/or particulate

matter from points other than the stack of the air pollution control equipment.

e. Coke oven topside emissions shall not exceed the following:

e.1. No more than two percent (2%) of the charging ports or charging port lids shall have smoke and/or particulate matter emissions excluding the last oven charged.

e.2. No more than ten percent (10%) of the off-take piping shall have smoke and/or particulate matter emissions.

e.3. No smoke and/or particulate matter emissions are permitted from the coke oven gas collector main or any other topside point except as provided by Sections 4.1.31. e.1. or 4.1.31. e.2. [45CSR§§7-.3.3.e.1 or 7-3.3.e.2].

f. No more than ten percent (10%) of the door areas of operating coke ovens shall have door area emissions, excluding the door areas representing the last oven charged.

a. Quench towers shall employ as a minimum good baffle design with make-up water from the receiving stream, except that the blowdown from scrubbers of a pushing emission control system, dedicated to a specific battery, may be used as make-up water for the quench tower of that battery so long as suspended solids do not exceed two hundred (200) milligrams per liter. For batteries which this section applies the receiving stream shall be the Ohio River.

h. Smoke and/or particulate matter emissions from combustion stacks shall meet the requirements of Sections 3.1.10. and 3.1.11. [45CSR§§7-.3.1 and 7- 3.2] and shall not exceed a concentration of 0.040 grains per dry standard cubic foot.

i. Good operating practices must be maintained to prevent the atmospheric entrainment of particulate matter resulting from the spillage or other deposition of coal and/or coke.

**[45CSR§7-3.3.]**

4.1.32. Sulfur dioxide emissions from pushing at Coke Oven Batteries #1, #2 and #3 shall not exceed 10.48 pounds per hour.
**[45CSR13, R13-1939A, A.23.]**

4.1.33. Sulfur dioxide emissions from pushing at Coke Oven Battery #8 shall not exceed 15.72 pounds per hour.
**[45CSR13, R13-1939A, A.24.]**

4.1.34. Compliance with the allowable emission limits stated in Sections 4.1.32. and 4.1.33. of this permit shall be calculated using a emission factor of 0.1078 pounds per tons of coal charged and multiplied by the hourly average tons of coal charged to the batteries each month.
**[45CSR13, R13-1939A, A.25.]**

4.1.35. The permitted quenching operation (Source P001-6, E1 and P004-7) shall comply with the following applicable requirements of 40CFR63, Subpart CCCCC - *National Emissions Standards for Hazardous Air Pollutants for Coke Ovens: Pushing, Quenching, and Battery Stacks*, with the exception of any more stringent limitations set forth in this

permit.

**§ 63.7290 What emission limitations must I meet for capture systems and control devices applied to pushing emissions?**

(a) You must not discharge to the atmosphere emissions of particulate matter from a control device applied to pushing emissions from a new or existing coke oven battery that exceed the applicable limit in paragraphs (a)(1) through (2) of this section:

(1) 0.01 grain per dry standard cubic foot (gr/dscf) if a cokeside shed is used to capture emissions *(P001-6 only)*;

(2) 0.02 pound per ton (lb/ton) of coke if a moveable hood vented to a stationary control device is used to capture emissions *(E1 and P004-7 only)*;

(b) You must meet each operating limit in paragraphs (b)(1) and (3) of this section that applies to you for a new or existing coke oven battery.

(1) For each venturi scrubber applied to pushing emissions, you must maintain the daily average pressure drop and scrubber water flow rate at or above the minimum levels established during the initial performance test *(E1 and P004-7 only)*.

(3) For each capture system applied to pushing emissions, you must maintain the daily average volumetric flow rate at the inlet of the control device at or above the minimum level established during the initial performance test; or

(i) For each capture system that uses an electric motor to drive the fan, you must maintain the daily average fan motor amperes at or above the minimum level established during the initial performance test; and

(ii) For each capture system that does not use a fan driven by an electric motor, you must maintain the daily average static pressure at the inlet to the control device at an equal or greater vacuum than the level established during the initial performance test or maintain the daily average fan revolutions per minute (RPM) at or above the minimum level established during the initial performance test.

**§ 63.7291 What work practice standards must I meet for fugitive pushing emissions if I have a by-product coke oven battery with vertical flues?**

(a) You must meet each requirement in paragraphs (a)(1) through (7) of this section for each new or existing by-product coke oven battery with vertical flues.

(1) Observe and record the opacity of fugitive pushing emissions from each oven at least once every 90 days. If an oven cannot be observed during a 90-day period due to circumstances that were not reasonably avoidable, you must observe the opacity of the first push of that oven following the close of the 90-day period that is capable of being observed in accordance with the procedures in §63.7334(a), and you must document why the oven was not observed within a 90-day period. All opacity observations of fugitive pushing emissions for batteries with vertical flues must be made using the procedures in §63.7334(a).

(2) If two or more batteries are served by the same pushing equipment and total no more than 90 ovens, the batteries as a unit can be considered a single battery.

(3) Observe and record the opacity of fugitive pushing emissions for at least four consecutive pushes per battery each day. Exclude any push during which the observer's view is obstructed or obscured by interferences and observe the next available push to complete the set of four pushes. If necessary due to circumstances that were not reasonably avoidable, you may observe fewer than four consecutive pushes in a day; however, you must observe and record as many consecutive pushes as possible and document why four consecutive pushes could not be observed. You may observe and record one or more non-consecutive pushes in addition to any consecutive pushes observed in a day.

(4) Do not alter the pushing schedule to change the sequence of consecutive pushes to be observed on any day. Keep records indicating the legitimate operational reason for any change in your pushing schedule which results in a change in the sequence of consecutive pushes observed on any day.

(5) If the average opacity for any individual push exceeds 30 percent opacity for any short battery or 35 percent opacity for any tall battery, you must take corrective action and/or increase coking time for that oven. You must complete corrective action or increase coking time within either 10 calendar days or the number of days determined using Equation 1 of this section, whichever is greater:

$X = 0.55 * Y$ (Eq. 1)

Where:

X = Number of calendar days allowed to complete corrective action or increase coking time; and

Y = Current coking time for the oven, hours.

For the purpose of determining the number of calendar days allowed under Equation 1 of this section, day one is the first day following the day you observed an opacity in excess of 30 percent for any short battery or 35 percent for any tall battery. Any fraction produced by Equation 1 of this section must be counted as a whole day. Days during which the oven is removed from service are not included in the number of days allowed to complete corrective action.

(6) (i) You must demonstrate that the corrective action and/or increased coking time was successful. After a period of time no longer than the number of days allowed in paragraph (a)(5) of this section, observe and record the opacity of the first two pushes for the oven capable of being observed using the procedures in §63.7334(a). The corrective action and/or increased coking time was successful if the average opacity for each of the two pushes is 30 percent or less for a short battery or 35 percent or less for a tall battery. If the corrective action and/or increased coking time was successful, you may return the oven to the 90-day reading rotation described in paragraph (a)(1) of this section. If the average opacity of either push exceeds 30 percent for a short battery or 35 percent for a tall battery, the corrective action and/or increased coking time was unsuccessful, and you must complete additional corrective action and/or increase coking time

for that oven within the number of days allowed in paragraph (a)(5) of this section.

(ii) After implementing any additional corrective action and/or increased coking time required under paragraph (a)(6)(i) or (a)(7)(ii) of this section, you must demonstrate that corrective action and/or increased coking time was successful. After a period of time no longer than the number of days allowed in paragraph (a)(5) of this section, you must observe and record the opacity of the first two pushes for the oven capable of being observed using the procedures in §63.7334(a). The corrective action and/or increased coking time was successful if the average opacity for each of the two pushes is 30 percent or less for a short battery or 35 percent or less for a tall battery. If the corrective action and/or increased coking time was successful, you may return the oven to the 90-day reading rotation described in paragraph (a)(1) of this section. If the average opacity of either push exceeds 30 percent for a short battery or 35 percent for a tall battery, the corrective action and/or increased coking time was unsuccessful, and you must follow the procedures in paragraph (a)(6)(iii) of this section.

(iii) If the corrective action and/or increased coking time was unsuccessful as described in paragraph (a)(6)(ii) of this section, you must repeat the procedures in paragraph (a)(6)(ii) of this section until the corrective action and/or increased coking time is successful. You must report to the permitting authority as a deviation each unsuccessful attempt at corrective action and/or increased coking time under paragraph (a)(6)(ii) of this section.

(7) (i) If at any time you place an oven on increased coking time as a result of fugitive pushing emissions that exceed 30 percent for a short battery or 35 percent for a tall battery, you must keep the oven on the increased coking time until the oven qualifies for decreased coking time using the procedures in paragraph (a)(7)(ii) or (a)(7)(iii) of this section.

(ii) To qualify for a decreased coking time for an oven placed on increased coking time in accordance with paragraph (a)(5) or (6) of this section, you must operate the oven on the decreased coking time. After no more than two coking cycles on the decreased coking time, you must observe and record the opacity of the first two pushes that are capable of being observed using the procedures in §63.7334(a). If the average opacity for each of the two pushes is 30 percent or less for a short battery or 35 percent or less for a tall battery, you may keep the oven on the decreased coking time and return the oven to the 90-day reading rotation described in paragraph (a)(1) of this section. If the average opacity of either push exceeds 30 percent for a short battery or 35 percent for a tall battery, the attempt to qualify for a decreased coking time was unsuccessful. You must then return the oven to the previously established increased coking time, or implement other corrective action(s) and/or increased coking time. If you implement other corrective action and/or a coking time that is shorter than the previously established increased coking time, you must follow the procedures in paragraph (a)(6)(ii) of this section to confirm that the corrective action(s) and/or increased coking time was successful.

(iii) If the attempt to qualify for decreased coking time was unsuccessful as described in paragraph (a)(7)(ii) of this section, you may again attempt to qualify for decreased coking time for the oven. To do this, you must operate the oven on the decreased coking time. After no more than two coking cycles on the decreased coking time, you must observe and record the opacity of the first two pushes that are capable of being observed using the procedures in §63.7334(a).

If the average opacity for each of the two pushes is 30 percent or less for a short battery or 35 percent or less for a tall battery, you may keep the oven on the decreased coking time and return the oven to the 90-day reading rotation described in paragraph (a)(1) of this section. If the average opacity of either push exceeds 30 percent for a short battery or 35 percent for a tall battery, the attempt to qualify for a decreased coking time was unsuccessful. You must then return the oven to the previously established increased coking time, or implement other corrective action(s) and/or increased coking time. If you implement other corrective action and/or a coking time that is shorter than the previously established increased coking time, you must follow the procedures in paragraph (a)(6)(ii) of this section to confirm that the corrective action(s) and/or increased coking time was successful.

(iv) You must report to the permitting authority as a deviation the second and any subsequent consecutive unsuccessful attempts on the same oven to qualify for decreased coking time as described in paragraph (a)(7)(iii) of this section.

(c)As provided in §63.6(g), you may request to use an alternative to the work practice standards in paragraph (a) of this section.

**§ 63.7294 What work practice standard must I meet for soaking?**

(a) For each new and existing by-product coke oven battery, you must prepare and operate at all times according to a written work practice plan for soaking. Each plan must include measures and procedures to:

(1) Train topside workers to identify soaking emissions that require corrective actions.

(2) Damper the oven off the collecting main prior to opening the standpipe cap.

(3) Determine the cause of soaking emissions that do not ignite automatically, including emissions that result from raw coke oven gas leaking from the collecting main through the damper, and emissions that result from incomplete coking.

(4) If soaking emissions are caused by leaks from the collecting main, take corrective actions to eliminate the soaking emissions. Corrective actions may include, but are not limited to, reseating the damper, cleaning the flushing liquor piping, using aspiration, putting the oven back on the collecting main, or igniting the emissions.

(5) If soaking emissions are not caused by leaks from the collecting main, notify a designated responsible party. The responsible party must determine whether the soaking emissions are due to incomplete coking. If incomplete coking is the cause of the soaking emissions, you must put the oven back on the collecting main until it is completely coked or you must ignite the emissions.

(b) As provided in §63.6(g), you may request to use an alternative to the work practice standard in paragraph (a) of this section.

**§ 63.7295 What requirements must I meet for quenching?**

(a) You must meet the requirements in paragraphs (a)(1) and (2) of this section for each quench tower and backup quench station at a new or existing coke oven battery.

(1) For the quenching of hot coke, you must meet the requirements in paragraph (a)(1)(i) or (ii) of this section.

(i) The concentration of total dissolved solids (TDS) in the water used for quenching must not exceed 1,100 milligrams per liter (mg/L) (Compliance with Requirement 4.1.36(3) will demonstrate compliance with §63.7295(a)(1)(i)); or

(ii) The sum of the concentrations of benzene, benzo(a)pyrene, and naphthalene in the water used for quenching must not exceed the applicable site-specific limit approved by the permitting authority.

(2) You must use acceptable makeup water, as defined in §63.7352, as makeup water for quenching.

(b) For each quench tower at a new or existing coke oven battery and each backup quench station at a new coke oven battery, you must meet each of the requirements in paragraphs (b)(1) through (4) of this section.

(1) You must equip each quench tower with baffles such that no more than 5 percent of the cross sectional area of the tower may be uncovered or open to the sky.

(2) You must wash the baffles in each quench tower once each day that the tower is used to quench coke, except as specified in paragraphs (b)(2)(i) and (ii) of this section.

(i) You are not required to wash the baffles in a quench tower if the highest measured ambient temperature remains less than 30 degrees Fahrenheit throughout that day (24-hour period). If the measured ambient temperature rises to 30 degrees Fahrenheit or more during the day, you must resume daily washing according to the schedule in your operation and maintenance plan.

(ii) You must continuously record the ambient temperature on days that the baffles were not washed.

(3) You must inspect each quench tower monthly for damaged or missing baffles and blockage.

(4) You must initiate repair or replacement of damaged or missing baffles within 30 days and complete as soon as practicable.

(c) As provided in §63.6(g), you may request to use an alternative to the work practice standards in paragraph (b) of section.

**§ 63.7296 What emission limitations must I meet for battery stacks?**

You must not discharge to the atmosphere any emissions from any battery stack at a new or existing by-product coke oven battery that exhibit an opacity greater than the applicable limit in paragraphs (a) and (b) of this section.

(a) Daily average of 15 percent opacity for a battery on a normal coking cycle.

(b) Daily average of 20 percent opacity for a battery on batterywide extended coking.

**§ 63.7300 What are my operation and maintenance requirements?**

(a) As required by §63.6(e)(1)(i), you must always operate and maintain your affected source, including air pollution control and monitoring equipment, in a manner consistent with good air pollution control practices for minimizing emissions at least to the levels required by this subpart.

(b) You must prepare and operate at all times according to a written operation and maintenance plan for the general operation and maintenance of new or existing by-product coke oven batteries. Each plan must address, at a minimum, the elements listed in paragraphs (b)(1) through (6) of this section.

(1) Frequency and method of recording underfiring gas parameters.

(2) Frequency and method of recording battery operating temperature, including measurement of individual flue and cross-wall temperatures.

(3) Procedures to prevent pushing an oven before it is fully coked.

(4) Procedures to prevent overcharging and undercharging of ovens, including measurement of coal moisture, coal bulk density, and procedures for determining volume of coal charged.

(5) Frequency and procedures for inspecting flues, burners, and nozzles.

(6) Schedule and procedures for the daily washing of baffles.

(c) You must prepare and operate at all times according to a written operation and maintenance plan for each capture system and control device applied to pushing emissions from a new or existing coke oven battery. Each plan must address at a minimum the elements in paragraphs (c)(1) through (3) of this section.

(1) Monthly inspections of the equipment that are important to the performance of the total capture system (*e.g.*, pressure sensors, dampers, and damper switches). This inspection must include observations of the physical appearance of the equipment (*e.g.*, presence of holes in ductwork or hoods, flow constrictions caused by dents or accumulated dust in ductwork, and fan erosion). In the event a defect or deficiency is found in the capture system (during a monthly inspection or between inspections), you must complete repairs within 30 days after the date that the defect or deficiency is discovered. If you determine that the repairs cannot be completed within 30 days, you must submit a written request for an extension of time to complete the repairs that must be received by the permitting authority not more than 20 days after the date that the defect or deficiency is discovered. The request must contain a description of the defect or deficiency, the steps needed and taken to correct the problem, the interim steps being taken to mitigate the emissions impact of the defect or deficiency, and a proposed schedule for completing the repairs. The request shall be deemed approved unless and until such time as the permitting authority notifies you that it objects to the request. The permitting authority may consider all relevant factors in deciding whether to approve or deny the request (including feasibility

and safety). Each approved schedule must provide for completion of repairs as expeditiously as practicable, and the permitting authority may request modifications to the proposed schedule as part of the approval process.

(2) Preventative maintenance for each control device, including a preventative maintenance schedule that is consistent with the manufacturer's instructions for routine and long-term maintenance.

(3) Corrective action for all baghouses applied to pushing emissions. In the event a bag leak detection system alarm is triggered, you must initiate corrective action to determine the cause of the alarm within 1 hour of the alarm, initiate corrective action to correct the cause of the problem within 24 hours of the alarm, and complete the corrective action as soon as practicable. Actions may include, but are not limited to:

(i) Inspecting the baghouse for air leaks, torn or broken bags or filter media, or any other condition that may cause an increase in emissions.

(ii) Sealing off defective bags or filter media.

(iii) Replacing defective bags or filter media or otherwise repairing the control device.

(iv) Sealing off a defective baghouse compartment.

(v) Cleaning the bag leak detection system probe, or otherwise repairing the bag leak detection system.

(vi) Shutting down the process producing the particulate emissions.

**§ 63.7310 What are my general requirements for complying with this subpart?**

(a) You must be in compliance with the emission limitations, work practice standards, and operation and maintenance requirements in this subpart at all times, except during periods of startup, shutdown, and malfunction as defined in §63.2.

(b) During the period between the compliance date specified for your affected source in §63.7283 and the date upon which continuous monitoring systems have been installed and certified and any applicable operating limits have been set, you must maintain a log detailing the operation and maintenance of the process and emissions control equipment.

(c) You must develop a written startup, shutdown, and malfunction plan according to the provisions in §63.6(e)(3).

**§ 63.7323 What procedures must I use to establish operating limits?**

(a) For a venturi scrubber applied to pushing emissions from a coke oven battery, you must establish site-specific operating limits for pressure drop and scrubber water flow rate

according to the procedures in paragraphs (a)(1) and (2) of this section *(E1 and P004-7 only)*.

(1) Using the continuous parameter monitoring systems (CPMS) required in §63.7330(b), measure and record the pressure drop and scrubber water flow rate for each particulate matter test run during periods of pushing. A minimum of one pressure drop measurement and one scrubber water flow rate measurement must be obtained for each push.

(2) Compute and record the average pressure drop and scrubber water flow rate for each test run. Your operating limits are the lowest average pressure drop and scrubber water flow rate values recorded during any of the three runs that meet the applicable emission limit.

(c) For a capture system applied to pushing emissions from a coke oven battery, you must establish a site-specific operating limit according to the procedures in paragraphs (c)(1), (2), or (3) of this section *(P001-6 only)*.

(1) If you elect the operating limit in §63.7290(b)(3) for volumetric flow rate, measure and record the total volumetric flow rate at the inlet of the control device during each push sampled for each particulate matter test run. Your operating limit is the lowest volumetric flow rate recorded during any of the three runs that meet the emission limit.

(2) If you elect the operating limit in §63.7290(b)(3)(i) for fan motor amperes, measure and record the fan motor amperes during each push sampled for each particulate matter test run. Your operating limit is the lowest fan motor amperes recorded during any of the three runs that meet the emission limit.

(3) If you elect the operating limit in §63.7290(b)(3)(ii) for static pressure or fan RPM, measure and record the static pressure at the inlet of the control device or fan RPM during each push sampled for each particulate matter test run. Your operating limit for static pressure is the minimum vacuum recorded during any of the three runs that meets the emission limit. Your operating limit for fan RPM is the lowest fan RPM recorded during any of the three runs that meets the emission limit.

(e) You may change the operating limit for a venturi scrubber, capture system, or mobile control device that captures emissions during pushing if you meet the requirements in paragraphs (e)(1) through (3) of this section.

(1) Submit a written notification to the Administrator of your request to conduct a new performance test to revise the operating limit.

(2) Conduct a performance test to demonstrate that emissions of particulate matter from the control device do not exceed the applicable limit in §63.7290(a).

(3) Establish revised operating limits according to the applicable procedures in paragraphs (a) and (c) of this section.

**[45CSR13, R13-2591A, 4.1.9. , 45CSR34 and 40CFR63, Subpart CCCCC]**

4.1.36. The following operating limits and conditions are specific to the operation of the South Quench Tower (Source E1) and the backup North Quench Tower (Source P004-7) employed by Battery No. 8:

(1) Coke product from Battery No. 8 shall be charged to the South Quench Tower or the backup North Quench Tower. Coke product shall never be charged to both quench towers simultaneously.

(2) The facility shall provide makeup water from MACT acceptable sources as defined by 40CFR63.7352. *Acceptable makeup water* means surface water from a river, lake, or stream; water meeting drinking water standards; storm water runoff and production area clean up water except for water from the by-product recovery plant area; process wastewater treated to meet effluent limitations guidelines in 40 CFR part 420; water from any of these sources that has been used only for non-contact cooling or in water seals; or water from scrubbers used to control pushing emissions. **[§ 63.7295(a)(2)]**

(3) The makeup water administered in the quenching process shall have a total dissolved solids concentration less than 800 milligrams per liter and total suspended solids concentration of less than 100 milligrams per liter. **[45CSR§7-3.4.g.]**

(4) Product charged to the quench towers shall not exceed a maximum hourly rate of 175 tons per hour, or a total combined maximum annual rate of 1,238,376 tons per year.

(5) The total combined emissions vented though Emission Point Stack 08a and Stack 08b shall be limited to the pollutants and associated emission rates shown in the following table:

| Pollutant | Proposed Emissions[2] | |
|---|---|---|
| | Hourly (lbs/hr) | Annual[1] (tons/yr) |
| PM | 94.5 | 334.4 |
| $PM_{10}$ | 9.3 | 32.8 |
| Benzo(a)Pyrene | 0.03 | 0.1 |
| Naphthalene | 0.03 | 0.1 |
| Benzene | 0.02 | 0.05 |
| Lead | 0.01 | 0.003 |

1- Annual emissions are based on a maximum permitted throughput of 1,238,376 tons per year.
2- All emission rates based on AP-42 emission standards.

**[45CSR13, R13-2591A, 4.1.10. and 45CSR34]**

4.1.37. Compliance with all annual limits set forth in Requirements 4.1.35. and 4.1.36. shall be determined using a twelve month rolling total. A twelve month rolling total shall mean the sum of the measured operating parameter at any given time during the previous twelve (12) consecutive calendar months.
**[45CSR13, R13-2591A, 4.1.11. 45CSR34 and 40CFR63, Subpart CCCCC]**

## Monitoring Requirements

4.2.1 See Section 3.2

4.2.2. For the purpose of determining compliance with the baffle washing requirements set forth in Section 4.1.35. of this permit, the baffles must be washed once each day that the tower is employed in the coke quenching operation, except during periods when the ambient temperature remains less than 30 degrees Fahrenheit throughout that day (24-hour period). During days that the baffles are not washed, the permittee shall conduct continuous monitoring of the ambient temperature.
**[40 CFR63.7342(d) and 45CSR13, R13-2591A, 4.2.4.]**

4.2.3. For the purpose of determining compliance with the throughput limits set forth in Section 4.1.36(4) of this permit, the permittee shall monitor the maximum averaged hourly and total annual coke product through the Battery 8 quench towers, and shall monitor the combined total amount of coal charged into Batteries 1,2, and 3 on a hourly and monthly basis. This monthly total shall be sum with the previous eleven months total to get a 12 month rolling total. Such records shall be maintained in accordance with this permit.
**[45CSR13, R13-2591A, 4.2.5.]**

4.2.4. The permitted quenching operation (Source P001-6, E1 and P004-7) shall comply with the following monitoring requirements of 40CFR63, Subpart CCCCC - *National Emissions Standards for Hazardous Air Pollutants for Coke Ovens: Pushing, Quenching, and Battery Stacks*, with the exception of any more stringent limitations set forth in this permit.

4.2.5. The permittee shall inspect the Battery #8 E1 quench tower monthly for damaged or missing baffles and blockage. Repairs of damaged or missing baffles must initiate within 30 days of the detection and be completed as soon as practicable. Such records of inspections and repairs shall be maintained in accordance with conditions in this permit.

**§ 63.7330 What are my monitoring requirements?**

(a) For each baghouse applied to pushing emissions from a coke oven battery, you must at all times monitor the relative change in particulate matter loadings using a bag leak detection system according to the requirements in §63.7331(a) and conduct inspections at their specified frequency according to the requirements in paragraphs (a)(1) through (8) of this section *(P001-6 only)*.

(1) Monitor the pressure drop across each baghouse cell each day to ensure pressure drop is within the normal operating range identified in the manual;

(2) Confirm that dust is being removed from hoppers through weekly visual inspections or equivalent means of ensuring the proper functioning of removal mechanisms;

(3) Check the compressed air supply for pulse-jet baghouses each day;

(4) Monitor cleaning cycles to ensure proper operation using an appropriate methodology;

(5) Check bag cleaning mechanisms for proper functioning through monthly visual inspection or equivalent means;

(6) Make monthly visual checks of bag tension on reverse air and shaker-type baghouses to ensure that bags are not kinked (kneed or bent) or laying on their sides. You do not have to make this check for shaker-type baghouses using self-tensioning (spring-loaded) devices;

(7) Confirm the physical integrity of the baghouse through quarterly visual inspections of the baghouse interior for air leaks; and

(8) Inspect fans for wear, material buildup, and corrosion through quarterly visual inspections, vibration detectors, or equivalent means.

(b) For each venturi scrubber applied to pushing emissions, you must at all times monitor the pressure drop and water flow rate using a CPMS according to the requirements in §63.7331(e) *(E1 and P004-7 only).*

(d) For each capture system applied to pushing emissions, you must at all times monitor the volumetric flow rate according to the requirements in §63.7331(g), the fan motor amperes according to the requirements in §63.7331(h), or the static pressure or the fan RPM according to the requirements in §63.7331(i).

(e) For each by-product coke oven battery, you must monitor at all times the opacity of emissions exiting each stack using a COMS according to the requirements in §63.7331(j).

**§ 63.7331 What are the installation, operation, and maintenance requirements for my monitors?**

(a) For each baghouse applied to pushing emissions, you must install, operate, and maintain each bag leak detection system according to the requirements in paragraphs (a)(1) through (7) of this section *(P001-6 only).*

(1) The system must be certified by the manufacturer to be capable of detecting emissions of particulate matter at concentrations of 10 milligrams per actual cubic meter (0.0044 grains per actual cubic foot) or less;

(2) The system must provide output of relative changes in particulate matter loadings;

(3) The system must be equipped with an alarm that will sound when an increase in relative particulate loadings is detected over a preset level. The alarm must be located such that it can be heard by the appropriate plant personnel;

(4) Each system that works based on the triboelectric effect must be installed, operated, and maintained in a manner consistent with the guidance document, "Fabric Filter Bag Leak Detection Guidance" (EPA–454/R–98–015, September 1997). You may install, operate, and maintain other types of bag leak detection systems in a manner consistent with the manufacturer's written specifications and recommendations;

(5) To make the initial adjustment of the system, establish the baseline output by adjusting the sensitivity (range) and the averaging period of the device. Then, establish the alarm set points and the alarm delay time;

(6) Following the initial adjustment, do not adjust the sensitivity or range, averaging period, alarm set points, or alarm delay time, except as detailed in your operation and maintenance plan. Do not increase the sensitivity by more than 100 percent or decrease the sensitivity by more than 50 percent over a 365-day period unless a responsible official certifies, in writing, that the baghouse has been inspected and found to be in good operating condition; and

(7) Where multiple detectors are required, the system's instrumentation and alarm may be shared among detectors.

(b) For each CPMS required in §63.7330, you must develop and make available for inspection upon request by the permitting authority a site-specific monitoring plan that addresses the requirements in paragraphs (b)(1) through (6) of this section *(E1 and P004-7 only).*

(1) Installation of the CPMS sampling probe or other interface at a measurement location relative to each affected process unit such that the measurement is representative of control of the exhaust emissions (e.g., on or downstream of the last control device);

(2) Performance and equipment specifications for the sample interface, the parametric signal analyzer, and the data collection and reduction system;

(3) Performance evaluation procedures and acceptance criteria (e.g., calibrations);

(4) Ongoing operation and maintenance procedures in accordance with the general requirements of §§63.8(c)(1), (3), (4)(ii), (7), and (8);

(5) Ongoing data quality assurance procedures in accordance with the general requirements of §63.8(d); and

(6) Ongoing recordkeeping and reporting procedures in accordance the general requirements of §§63.10(c), (e)(1), and (e)(2)(i).

(c) You must conduct a performance evaluation of each CPMS in accordance with your site-specific monitoring plan *(E1 and P004-7 only).*

(d) You must operate and maintain the CPMS in continuous operation according to the site-specific monitoring plan *(E1 and P004-7 only).*

(e) For each venturi scrubber applied to pushing emissions, you must install, operate, and maintain CPMS to measure and record the pressure drop across the scrubber and scrubber water flow rate during each push according to the requirements in paragraphs (b) through (d) of this section except as specified in paragraphs (e)(1) through (3) of this section *(E1 and P004-7 only).*

(1) Each CPMS must complete a measurement at least once per push;

(2) Each CPMS must produce valid data for all pushes; and

(3) Each CPMS must determine and record the daily (24-hour) average of all recorded readings.

(g) If you elect the operating limit in §63.7290(b)(3) for a capture system applied to pushing emissions, you must install, operate, and maintain a device to measure the total volumetric flow rate at the inlet of the control device.

(h) If you elect the operating limit in §63.7290(b)(3)(i) for a capture system applied to pushing emissions, you must install, operate, and maintain a device to measure the fan motor amperes.

(i) If you elect the operating limit in §63.7290(b)(3)(ii) for a capture system applied to pushing emissions, you must install, operate and maintain a device to measure static pressure at the inlet of the control device or the fan RPM.

(j) For each by-product coke oven battery, you must install, operate, and maintain a COMS to measure and record the opacity of emissions exiting each stack according to the requirements in paragraphs (j)(1) through (5) of this section.

(1) You must install, operate, and maintain each COMS according to the requirements in §63.8(e) and Performance Specification 1 in 40 CFR part 60, appendix B. Identify periods the COMS is out-of-control, including any periods that the COMS fails to pass a daily calibration drift assessment, quarterly performance audit, or annual zero alignment audit.

(2) You must conduct a performance evaluation of each COMS according to the requirements in §63.8 and Performance Specification 1 in appendix B to 40 CFR part 60;

(3) You must develop and implement a quality control program for operating and maintaining each COMS according to the requirements in §63.8(d). At minimum, the quality control program must include a daily calibration drift assessment, quarterly performance audit, and an annual zero alignment audit of each COMS;

(4) Each COMS must complete a minimum of one cycle of sampling and analyzing for each successive 10-second period and one cycle of data recording for each successive 6-minute period. You must reduce the COMS data as specified in §63.8(g)(2).

(5) You must determine and record the hourly and daily (24-hour) average opacity according to the procedures in §63.7324(b) using all the 6-minute averages collected for periods during which the COMS is not out-of-control.

**§ 63.7332 How do I monitor and collect data to demonstrate continuous compliance?**

(a) Except for monitor malfunctions, associated repairs, and required quality assurance or control activities (including as applicable, calibration checks and required zero and span adjustments), you must monitor continuously (or collect data at all required intervals) at all times the affected source is operating.

(b) You may not use data recorded during monitoring malfunctions, associated repairs, and required quality assurance or control activities in data averages and calculations used to report emission or operating levels, or in fulfilling a minimum data availability

requirement, if applicable. You must use all the data collected during all other periods in assessing compliance. A monitoring malfunction is any sudden, infrequent, not reasonably preventable failure of the monitor to provide valid data. Monitoring failures that are caused in part by poor maintenance or careless operation are not malfunctions.

**§ 63.7333 How do I demonstrate continuous compliance with the emission limitations that apply to me?**

(a) For each control device applied to pushing emissions and subject to the emission limit in §63.7290(a), you must demonstrate continuous compliance by meeting the requirements in paragraphs (a)(1) and (2) of this section:

(1) Maintaining emissions of particulate matter at or below the applicable limits in paragraphs §63.7290(a)(1) through (4); and

(2) Conducting subsequent performance tests to demonstrate continuous compliance no less frequently than twice during each term of your title V operating permit (at mid-term and renewal).

(b) For each venturi scrubber applied to pushing emissions and subject to the operating limits in §63.7290(b)(1), you must demonstrate continuous compliance by meeting the requirements in paragraphs (b)(1) through (3) of this section *(E1 and P004-7 only)*.

(1) Maintaining the daily average pressure drop and scrubber water flow rate at levels no lower than those established during the initial or subsequent performance test.

(2) Operating and maintaining each CPMS according to §63.7331(b) and recording all information needed to document conformance with these requirements.

(3) Collecting and reducing monitoring data for pressure drop and scrubber water flow rate according to §63.7331(e)(1) through (3).

(d) For each capture system applied to pushing emissions and subject to the operating limit in §63.7290(b)(3), you must demonstrate continuous compliance by meeting the requirements in paragraph (d)(1), (2), or (3) of this section:

(1) If you elect the operating limit for volumetric flow rate in §63.7290(b)(3):

(i) Maintaining the daily average volumetric flow rate at the inlet of the control device at or above the minimum level established during the initial or subsequent performance test; and

(ii) Checking the volumetric flow rate at least every 8 hours to verify the daily average is at or above the minimum level established during the initial or subsequent performance test and recording the results of each check.

(2) If you elect the operating limit for fan motor amperes in §63.7290(b)(3)(i):

(i) Maintaining the daily average fan motor amperages at or above the minimum level established during the initial or subsequent performance test; and

(ii) Checking the fan motor amperage at least every 8 hours to verify the daily average is at or above the minimum level established during the initial or subsequent performance test and recording the results of each check.

(3) If you elect the operating limit for static pressure or fan RPM in §63.7290(b)(3)(ii):

(i) Maintaining the daily average static pressure at the inlet to the control device at an equal or greater vacuum than established during the initial or subsequent performance test or the daily average fan RPM at or above the minimum level established during the initial or subsequent performance test; and

(ii) Checking the static pressure or fan RPM at least every 8 hours to verify the daily average static pressure at the inlet to the control device is at an equal or greater vacuum than established during the initial or subsequent performance test or the daily average fan RPM is at or above the minimum level established during the initial or subsequent performance test and recording the results of each check.

(e) Beginning on the first day compliance is required under §63.7283, you must demonstrate continuous compliance for each by-product coke oven battery subject to the opacity limit for stacks in §63.7296(a) by meeting the requirements in paragraphs (e)(1) and (2) of this section:

(1) Maintaining the daily average opacity at or below 15 percent for a battery on a normal coking cycle or 20 percent for a battery on batterywide extended coking; and

(2) Operating and maintaining a COMS and collecting and reducing the COMS data according to §63.7331(j).

(f) Beginning on the first day compliance is required under §63.7283, you must demonstrate continuous compliance with the TDS limit for quenching in §63.7295(a)(1)(i) by meeting the requirements in paragraphs (f)(1) and (2) of this section:

(1) Maintaining the TDS content of the water used to quench hot coke at 1,100 mg/L or less; and

(2) Determining the TDS content of the quench water at least weekly according to the requirements in §63.7325(a) and recording the sample results.

(g) Beginning on the first day compliance is required under §63.7283, you must demonstrate continuous compliance with the constituent limit for quenching in §63.7295(a)(1)(ii) by meeting the requirements in paragraphs (g)(1) and (2) of this section:

(1) Maintaining the sum of the concentrations of benzene, benzo(a)pyrene, and naphthalene in the water used to quench hot coke at levels less than or equal to the site-specific limit approved by the permitting authority; and

(2) Determining the sum of the constituent concentrations at least monthly according to the requirements in §63.7325(c) and recording the sample results.

***[45CSR34 and 40CFR63, Subpart CCCCC]***

## Testing Requirements

4.3.1. Except as otherwise provided, a daily performance test shall be conducted each day, 7 days per week for each new and existing coke oven battery, the results of which shall be used in accordance with procedures specified in 40 C.F.R. Part 63 Subpart L to determine compliance with each of the applicable visible emission limitations for coke oven doors, topside port lids, offtake systems, and charging operations in 40 C.F.R. Part 63 Subpart L. If a facility pushes and charges only at night, then that facility must, at its option, change their schedule and charge during daylight hours or provide adequate lighting so that visible emission inspections can be made at night. "Adequate lighting" will be determined by the enforcement agency.

(1) Each performance test is to be conducted according to the procedures and requirements in this section and in Method 303 or 303A in appendix A to 40 C.F.R. Part 63 or Methods 9 and 22 in appendix A to 40 C.F.R. Part 60 (where applicable).

(2) Each performance test is to be conducted by a certified observer.

(3) The certified observer shall complete any reasonable safety-training program offered by the owner or operator prior to conducting any performance test at a coke oven battery.

**[45CSR34, 40 C.F.R. § 63.309 (a)]**

4.3.2. The certified observer shall conduct each performance test according to the requirements in this paragraph:

(1) The certified observer shall conduct one run each day to observe and record visible emissions from each coke oven door, topside port lid, and offtake system on each coke oven battery. The certified observer also shall conduct five runs to observe and record the seconds of visible emissions per charge for five consecutive charges from each coke oven battery. The observer may perform additional runs as needed to obtain and record a visible emissions value (or set of values) for an emission point that is valid under Method 303 or Method 303A in appendix A to 40 C.F.R. Part 63. Observations from fewer than five consecutive charges shall constitute a valid set of charging observations only in accordance with the procedures and conditions specified in sections 3.8 and 3.9 of Method 303 in appendix A to 40 C.F.R. Part 63.

(2) If a valid visible emissions value (or set of values) is not obtained for a performance test, there is no compliance determination for that day. Compliance determinations will resume on the next day that a valid visible emissions value (or set of values) is obtained.

(3) After each performance test for a by-product coke oven battery, the certified observer shall check and record the collecting main pressure according to the procedures in section 6.3 of Method 303 in appendix A to 40 C.F.R. Part 63.

(i) The owner or operator shall demonstrate pursuant to Method 303 in appendix A to 40 C.F.R. Part 63 the accuracy of the pressure measurement device upon request of the certified observer;

(ii) The owner or operator shall not adjust the pressure to a level below the range of normal operation during or prior to the inspection;

(6) In no case shall the owner or operator knowingly block a coke oven door, or any portion of a door for the purpose of concealing emissions or preventing observations by the certified observer.

**[45CSR34, 40 C.F.R. § 63.309 (c)]**

4.3.3. Using the observations obtained from each performance test, the enforcement agency shall compute and record, in accordance with the procedures and requirements of Method 303 or 303A in appendix A to 40 C.F.R. Part 63, for each day of operations on which a valid emissions value (or set of values) is obtained:

(1) The 30-run rolling average of the percent leaking coke oven doors, topside port lids, and offtake systems on each coke oven battery, using the equations in sections 4.5.3.2, 5.6.5.2, and 5.6.6.2 of Method 303 (or section 3.4.3.2 of Method 303A) in appendix A to 40 C.F.R. Part 63;

(2) For by-product coke oven battery charging operations, the logarithmic 30-day rolling average of the seconds of visible emissions per charge for each battery, using the equation in section 3.9 of Method 303 in appendix A to 40 C.F.R. Part 63;

(5) For an approved alternative emission limitation for coke oven doors according to 40 C.F.R. §63.305, the weekly or monthly observation of the percent leaking coke oven doors using Method 303 in appendix A to 40 C.F.R. Part 63, the percent opacity of visible emissions from the control device for the shed using Method 9 in appendix A to 40 C.F.R. Part 60, and visible emissions from the shed using Method 22 in appendix A to 40 C.F.R. Part 60;

**[45CSR34, 40 C.F.R. § 63.309 (d)]**

4.3.4. The certified observer shall make available to the implementing agency as well as to the owner or operator, a copy of the daily inspection results by the end of the day and shall make available the calculated rolling average for each emission point to the owner or operator as soon as practicable following each performance test. The information provided by the certified observer is not a compliance determination. For the purpose of notifying an owner or operator of the results obtained by a certified observer, the person does not have to be certified.
**[45CSR34, 40 C.F.R. § 63.309 (e)]**

4.3.5. Compliance shall not be determined more often than the schedule provided for performance tests under Section 4.3.1. to 4.3.7. [40 C.F.R. § 63.309]. If additional valid emissions observations are obtained (or in the case of charging, valid sets of emission observations), the arithmetic average of all valid values (or valid sets of values) obtained during the day shall be used in any computations performed to determine compliance

under Section 4.3.3. [40 C.F.R. § 63.309 (d)] or determinations under Section 4.1.6. – 4.1.9. [40 C.F.R. § 63.306].
**[45CSR34, 40 C.F.R. § 63.309 (f)]**

4.3.6. For a flare installed to meet the requirements of Section 4.1.11. [40 C.F.R. § 63.307(b)]:

(1) Compliance with the provisions in Section 4.1.12. [40 C.F.R. §63.307(c)] (visible emissions from flares) shall be determined using Method 22 in appendix A to 40 C.F.R. Part 60, with an observation period of 2 hours; and

(2) Compliance with the provisions in Section 4.1.11. (4) [40 C.F.R. § 63.307(b)(4)] (flare pilot light) shall be determined using a thermocouple or any other equivalent device.

**[45CSR34, 40 C.F.R. § 63.309 (h)]**

4.3.7. No observations obtained during any program for training or for certifying observers under 40 C.F.R. Part 63 Subpart L shall be used to determine compliance with the requirements of 40 C.F.R. Part 63 Subpart L or any other federally enforceable standard.
**[45CSR34, 40 C.F.R. § 63.309 (i)]**

*4.3.8. For the purpose of determining compliance with the water quality requirements set forth by Section 4.1.36(2) and 4.1.36(3) of this permit, and the particulate matter emission limits set forth by Section 4.1.36(5) of this permit, the permittee shall monitor the concentration of total dissolved solids and total suspended solids within the makeup water supplied to the quench towers. The permittee shall conduct monthly water quality testing. Testing shall be performed to determine the maximum concentration of total dissolved solids within the makeup water feed.*
***[45CSR13, R13-2591A, 4.3.1.]***

4.3.9. The permitted quenching operation (Source P001-6, E1 and P004-7) shall comply with the following testing requirements of 40CFR63, Subpart CCCCC - *National Emissions Standards for Hazardous Air Pollutants for Coke Ovens: Pushing, Quenching, and Battery Stacks*, with the exception of any more stringent limitations set forth in this permit.

**§ 63.7320 By what date must I conduct performance tests or other initial compliance demonstrations?**

(a) As required in §63.7(a)(2), you must conduct a performance test to demonstrate compliance with each limit in §63.7290(a) for emissions of particulate matter from a control device applied to pushing emissions that applies to you within 180 calendar days after the compliance date that is specified in §63.7283.

(b) You must conduct performance tests to demonstrate compliance with the TDS limit or constituent limit for quench water in §63.7295(a)(1) and each opacity limit in §63.7297(a) for a by-product coke oven battery stack by the compliance date that is specified in §63.7283.

(c) For each work practice standard and operation and maintenance requirement that applies to you, you must demonstrate initial compliance within 30 calendar days after the compliance date that is specified in §63.7283.

§ 63.7321 When must I conduct subsequent performance tests?

For each control device subject to an emission limit for particulate matter in §63.7290(a), you must conduct subsequent performance tests no less frequently than twice (at mid-term and renewal) during each term of your title V operating permit.

**§ 63.7322 What test methods and other procedures must I use to demonstrate initial compliance with the emission limits for particulate matter?**

(a) You must conduct each performance test that applies to your affected source according to the requirements in paragraph (b) of this section.

(b) To determine compliance with the emission limit for particulate matter from a control device applied to pushing emissions where a cokeside shed is the capture system, follow the test methods and procedures in paragraphs (b)(1) and (2) of this section *(P001-6)*. To determine compliance with a process-weighted mass rate of particulate matter (lb/ton of coke) from a control device applied to pushing emissions where a cokeside shed is not used, follow the test methods and procedures in paragraphs (b)(1) through (4) of this section *(EI and P004-7)*.

(1) Determine the concentration of particulate matter according to the following test methods in appendix A to 40 CFR part 60.

(i) Method 1 to select sampling port locations and the number of traverse points. Sampling sites must be located at the outlet of the control device and prior to any releases to the atmosphere.

(ii) Method 2, 2F, or 2G to determine the volumetric flow rate of the stack gas.

(iii) Method 3, 3A, or 3B to determine the dry molecular weight of the stack gas.

(iv) Method 4 to determine the moisture content of the stack gas.

(v) Method 5 or 5D, as applicable, to determine the concentration of front half particulate matter in the stack gas.

(2) During each particulate matter test run, sample only during periods of actual pushing when the capture system fan and control device are engaged. Collect a minimum sample volume of 30 dry standard cubic feet of gas during each test run. Three valid test runs are needed to comprise a performance test. Each run must start at the beginning of a push and finish at the end of a push (i.e., sample for an integral number of pushes).

(3) Determine the total combined weight in tons of coke pushed during the duration of each test run according to the procedures in your source test plan for

calculating coke yield from the quantity of coal charged to an individual oven *(E1 and P004-7 only).*

(4) Compute the process-weighted mass emissions ($E_p$) for each test run using Equation 1 of this section as follows *(E1 and P004-7 only)*:

$$E_p = \frac{C \times Q \times T}{P \times K} \qquad \text{(Eq. 1)}$$

Where:

$E_p$ = Process weighted mass emissions of particulate matter, lb/ton;

C = Concentration of particulate matter, gr/dscf;

Q = Volumetric flow rate of stack gas, dscf/hr;

T = Total time during a run that a sample is withdrawn from the stack during pushing, hr;

P = Total amount of coke pushed during the test run, tons; and

K = Conversion factor, 7,000 gr/lb.

**§ 63.7324 What procedures must I use to demonstrate initial compliance with the opacity limits?**

(a) You must conduct each performance test that applies to your affected source according to the requirements in paragraph (b) of this section.

(b) To determine compliance with the daily average opacity limit for stacks of 15 percent for a by-product coke oven battery on a normal coking cycle or 20 percent for a by-product coke oven battery on batterywide extended coking, follow the test methods and procedures in paragraphs (b)(1) through (3) of this section.

(1) Using the continuous opacity monitoring system (COMS) required in §63.7330(e), measure and record the opacity of emissions from each battery stack for a 24-hour period.

(2) Reduce the monitoring data to hourly averages as specified in §63.8(g)(2).

(3) Compute and record the 24-hour (daily) average of the COMS data.

**§ 63.7325 What test methods and other procedures must I use to demonstrate initial compliance with the TDS or constituent limits for quench water?**

(a) If you elect the TDS limit for quench water in §63.7295(a)(1)(i), you must conduct each performance test that applies to your affected source according to the conditions in paragraphs (a)(1) and (2) of this section.

(1) Take the quench water sample from a location that provides a representative sample of the quench water as applied to the coke (e.g., from the header that feeds water to the quench tower reservoirs). Conduct sampling under normal and representative operating conditions.

(2) Determine the TDS concentration of the sample using Method 160.1 in 40 CFR part 136.3 (see "residue—filterable"), except that you must dry the total filterable residue at 103 to 105 °C (degrees Centigrade) instead of 180 °C.

(b) If at any time you elect to meet the alternative requirements for quench water in §63.7295(a)(1)(ii), you must establish a site-specific constituent limit according to the procedures in paragraphs (b)(1) through (4) of this section.

(1) Take a minimum of nine quench water samples from a location that provides a representative sample of the quench water as applied to the coke (e.g., from the header that feeds water to the quench tower reservoirs). Conduct sampling under normal and representative operating conditions.

(2) For each sample, determine the TDS concentration according to the requirements in paragraph (a)(2) of this section and the concentration of benzene, benzo(a)pyrene, and naphthalene using the applicable methods in 40 CFR part 136 or an approved alternative method.

(3) Determine and record the highest sum of the concentrations of benzene, benzo(a)pyrene, and naphthalene in any sample that has a TDS concentration less than or equal to the TDS limit of 1,100 mg/L. This concentration is the site-specific constituent limit.

(4) Submit the site-specific limit, sampling results, and all supporting data and calculations to your permitting authority for review and approval.

(c) If you elect the constituent limit for quench water in §63.7295(a)(1)(ii), you must conduct each performance test that applies to your affected source according to the conditions in paragraphs (c)(1) and (2) of this section.

(1) Take a quench water sample from a location that provides a representative sample of the quench water as applied to the coke (e.g., from the header that feeds water to the quench tower reservoirs). Conduct sampling under normal and representative operating conditions.

(2) Determine the sum of the concentration of benzene, benzo(a)pyrene, and naphthalene in the sample using the applicable methods in 40 CFR part 136 or an approved alternative method.

**§ 63.7326 How do I demonstrate initial compliance with the emission limitations that apply to me?**

(a) For each coke oven battery subject to the emission limit for particulate matter from a control device applied to pushing emissions, you have demonstrated initial compliance if you meet the requirements in paragraphs (a)(1) through (4) of this section that apply to you.

(1) The concentration of particulate matter, measured in accordance with the performance test procedures in §63.7322(b)(1) and (2), did not exceed 0.01 gr/dscf for a control device where a cokeside shed is used to capture pushing emissions *(P001-6 only)* or the process-weighted mass rate of particulate matter (lb/ton of coke), measured in accordance with the performance test procedures in §63.7322(b)(1) through (4), did not exceed:

(i) 0.02 lb/ton of coke if a moveable hood vented to a stationary control device is used to capture emissions *(E1 and P004-7 only)*

(2) for each venturi scrubber applied to pushing emissions, you have established appropriate site-specific operating limits and have a record of the pressure drop and scrubber water flow rate measured during the performance test in accordance with §63.7323(a) *(E1 and P004-7 only)*

(4) For each capture system applied to pushing emissions, you have established an appropriate site-specific operating limit, and:

(i) If you elect the operating limit in §63.7290(b)(3) for volumetric flow rate, you have a record of the total volumetric flow rate at the inlet of the control device measured during the performance test in accordance with §63.7323(c)(1); or

(ii) If you elect the operating limit in §63.7290(b)(3)(i) for fan motor amperes, you have a record of the fan motor amperes during the performance test in accordance with §63.7323(c)(2); or

(iii) If you elect the operating limit in §63.7290(b)(3)(ii) for static pressure or fan RPM, you have a record of the static pressure at the inlet of the control device or fan RPM measured during the performance test in accordance with §63.7323(c)(3).

(b) For each new or existing by-product coke oven battery subject to the opacity limit for stacks in §63.7296(a), you have demonstrated initial compliance if the daily average opacity, as measured according to the performance test procedures in §63.7324(b), is no more than 15 percent for a battery on a normal coking cycle or 20 percent for a battery on batterywide extended coking.

(c) For each new or existing by-product coke oven battery subject to the TDS limit or constituent limits for quench water in §63.7295(a)(1),

(1) You have demonstrated initial compliance with the TDS limit in §63.7295(a)(1)(i) if the TDS concentration, as measured according to the performance test procedures in §63.7325(a), does not exceed 1,100 mg/L.

(2) You have demonstrated initial compliance with the constituent limit in §63.7295(a)(1)(ii) if:

(i) You have established a site-specific constituent limit according to the procedures in §63.7325(b); and

(ii) The sum of the constituent concentrations, as measured according to the performance test procedures in §63.7325(c), is less than or equal to the site-specific limit.

***[45CSR34 and 40CFR63, Subpart CCCCC]***

## Recordkeeping Requirements

4.4.1.a. *Recordkeeping.* The owner or operator shall maintain files of all required information in a permanent form suitable for inspection at an onsite location for at least 1 year and must thereafter be accessible within 3 working days to the Administrator for the time period specified in 40 C.F.R §70.6(a)(3)(ii)(B). Copies of the work practice plan developed under Sections 4.1.6. – 4.1.9. [40 C.F.R. § 63.306] and the startup, shutdown, and malfunction plan developed under Sections 4.1.18. – 4.1.26. [40 C.F.R. §63.310] shall be kept onsite at all times. The owner or operator shall maintain the following information:

(3) A copy of the work practice plan required by Sections 4.1.6. – 4.1.9. [40 C.F.R. § 63.306] and any revision to the plan;

(4) If the owner or operator is required under Sections 4.1.8. [40 C.F.R.§ 63.306(c)] to implement the provisions of a work practice plan for a particular emission point, the following records regarding the implementation of plan requirements for that emission point during the implementation period;

(i) Copies of all written and audiovisual materials used in the training, the dates of each class, the names of the participants in each class, and documentation that all appropriate personnel have successfully completed the training required under Sections 4.1.7. (1) [40 C.F.R. § 63.306(b)(1)];

(ii) The records required to be maintained by the plan provisions implementing Sections 4.1.8. (7) [40 C.F.R. § 63.306(b)(7)];

(iii) Records resulting from audits of the effectiveness of the work practice program for the particular emission point, as required under Sections 4.1.7. (2)(i) [40 C.F.R. § 63.306(b)(2)(i)], ( 3)(i) [40 C.F.R. 63.306(b)(3)(i)], (4)(i) [40 C.F.R. § 63.306(b)(4)(i)], or (5)(i) [40 C.F.R. § 63.306(b)(5)(i)]; and

(iv) If the plan provisions for coke oven doors must be implemented, records of the inventory of doors and jambs as required under Sections 4.1.8. (2)(vi) [40 C.F.R. § 63.306(b)(2)(vi)]; and

(5) The design drawings and engineering specifications for the bypass/bleeder stack

flare system or approved alternative control device or system as required under Sections 4.1.10. – 4.1.13. [40 C.F.R. § 63.307].

(6) Records specified in Sections 4.1.23. [40 C.F.R. § 63.310(f)] regarding the basis of each malfunction notification.

**[45CSR34, 40 C.F.R. § 63.311 (f)]**

4.4.1.b. Record of Monitoring for Battery #8 Quench Tower (E1). The permittee shall keep the permittee shall keep records of monitoring information that include the following:

a.The date, place as defined in this permit and time of sampling or measurements;
b.The date(s) analyses were performed;
c.The company or entity that performed the analyses;
d.The analytical techniques or methods used;
e.The results of the analyses; and
f.The operating conditions existing at the time of sampling or measurement

4.4.1.c. Record of Maintenance of Air Pollution Control Equipment. For the E1 Quench Tower, the permittee shall maintain accurate records of all required pollution control equipment inspection and/or preventative maintenance procedures.

4.4.1.d. Record of Malfunctions of Air Pollution Control Equipment. For the E1 Quench Tower, the permittee shall maintain records of the occurrence and duration of any malfunction or operational shutdown of the air pollution control equipment during which excess emissions occur. For each such case, the following information shall be recorded:

a.The equipment involved.
b.Steps taken to minimize emissions during the event.
c.The duration of the event.
d.The estimated increase in emissions during the event.

For each such case associated with an equipment malfunction, the additional information shall also be recorded:

e.The cause of the malfunction. Steps taken to correct the malfunction.
g.Any changes or modifications to equipment or procedures that would help prevent future recurrences of the malfunction.

4.4.1.e. For the purpose of documenting the monitoring requirements associated with the E1 quench tower set forth in this permit, the permittee shall maintain the following records:

Operating schedule of the quench tower.

4.4.2. Records required to be maintained and reports required to be filed with the Administrator under 40 C.F.R. Part 63 Subpart L shall be made available in accordance with the requirements of this paragraph by the owner or operator to the authorized collective bargaining representative of the employees at a coke oven battery, for inspection and copying.

(1) Requests under Section 4.4.2. [40 C.F.R. § 63.311(g)] shall be submitted in writing, and shall identify the records or reports that are subject to the request with reasonable specificity;

(2) The owner or operator shall produce the reports for inspection and copying

within a reasonable period of time, not to exceed 30 days. A reasonable fee may be charged for copying (except for the first copy of any document), which shall not exceed the copying fee charged by the Administrator under 40 C.F.R. Part 2;

(3) Nothing in Section 4.4.2. [40 C.F.R. § 63.311(g)] shall require the production for inspection or copying of any portion of a document that contains trade secrets or confidential business information that the Administrator would be prohibited from disclosing to the public under 40 C.F.R. Part 2; and

(4) The inspection or copying of a document under Section 4.4.2. [40 C.F.R. § 63.311(g)] shall not in any way affect any property right of the owner or operator in such document under laws for the protection of intellectual property, including the copyright laws.

**[45CSR34, 40 C.F.R. § 63.311 (g)]**

4.4.3. The permittee shall maintain records of tons of coal charged to each of the coke oven batteries to be used in determining compliance with the requirements set forth in Sections 4.1.33. and 4.1.34. Records shall be expressed in tons of coal charged per day and be totaled at the end of each month. The permittee shall maintain these records for a period of 5 years.
**[45CSR13, R13-1939A, B.5.]**

4.4.4. For the purpose of documenting the monitoring requirements associated with the quench towers set forth in Section 4.2.2. and 4.2.3. of this permit, the permittee shall maintain the following records:

(1) Operating schedule of each quench tower.

(2) Total dissolved solids concentration and total suspended solids concentration of makeup water.

(3) Baffle inspection and cleaning, and the ambient temperature when applicable.

***[45CSR13, R13-2591A, 4.4.3.]***

4.4.5. The permitted quenching operation (Source P001-6, E1 and P004-7) shall comply with the following recordkeeping requirements of 40CFR63, Subpart CCCCC - *National Emissions Standards for Hazardous Air Pollutants for Coke Ovens: Pushing, Quenching, and Battery Stacks*, with the exception of any more stringent limitations set forth in this permit.

**§ 63.7334 How do I demonstrate continuous compliance with the work practice standards that apply to me?**

(a) For each by-product coke oven battery with vertical flues subject to the work practice standards for fugitive pushing emissions in §63.7291(a), you must demonstrate continuous compliance according to the requirements of paragraphs (a)(1) through (8) of this section:

(1) Observe and record the opacity of fugitive emissions for four consecutive pushes per operating day, except you may make fewer or non-consecutive observations as permitted by §63.7291(a)(3). Maintain records of the pushing schedule for each oven and records indicating the legitimate operational reason for any change in the pushing schedule according to §63.7291(a)(4).

(2) Observe and record the opacity of fugitive emissions from each oven in a battery at least once every 90 days. If an oven cannot be observed during a 90-day period, observe and record the opacity of the first push of that oven following the close of the 90-day period that can be read in accordance with the procedures in paragraphs (a)(1) through (8) of this section.

(3) Make all observations and calculations for opacity observations of fugitive pushing emissions in accordance with Method 9 in appendix A to 40 CFR part 60 using a Method 9 certified observer unless you have an approved alternative procedure under paragraph (a)(7) of this section.

(4) Record pushing opacity observations at 15-second intervals as required in section 2.4 of Method 9 (appendix A to 40 CFR part 60). The requirement in section 2.4 of Method 9 for a minimum of 24 observations does not apply, and the data reduction requirements in section 2.5 of Method 9 do not apply. The requirement in §63.6(h)(5)(ii)(B) for obtaining at least 3 hours of observations (thirty 6-minute averages) to demonstrate initial compliance does not apply.

(5) If fewer than six but at least four 15-second observations can be made, use the average of the total number of observations to calculate average opacity for the push. Missing one or more observations during the push (e.g., as the quench car passes behind a building) does not invalidate the observations before or after the interference for that push. However, a minimum of four 15-second readings must be made for a valid observation.

(6) Begin observations for a push at the first detectable movement of the coke mass. End observations of a push when the quench car enters the quench tower.

(i) For a battery without a cokeside shed, observe fugitive pushing emissions from a position at least 10 meters from the quench car that provides an unobstructed view and avoids interferences from the topside of the battery. This may require the observer to be positioned at an angle to the quench car rather than perpendicular to it. Typical interferences to avoid include emissions from open standpipes and charging. Observe the opacity of emissions above the battery top with the sky as the background where possible. Record the oven number of any push not observed because of obstructions or interferences.

(ii) For a battery with a cokeside shed, the observer must be in a position that provides an unobstructed view and avoids interferences from the topside of the battery. Typical interferences to avoid include emissions from open standpipes and charging. Observations must include any fugitive emissions that escape from the top of the shed, from the ends of the shed, or from the area where the shed is joined to the battery. If the observer does not have a clear view to identify when a push starts or ends, a second person can be positioned to signal the start or end of the push and notify the observer when to start or end the observations. Radio communications with other plant personnel (e.g., pushing ram

operator or quench car operator) may also serve to notify the observer of the start or end of a push. Record the oven number of any push not observed because of obstructions or interferences.

(iii) You may reposition after the push to observe emissions during travel if necessary.

(7) If it is infeasible to implement the procedures in paragraphs (a)(1) through (6) of this section for an oven due to physical obstructions, nighttime pushes, or other reasons, you may apply to your permitting authority for permission to use an alternative procedure. The application must provide a detailed explanation of why it is infeasible to use the procedures in paragraphs (a)(1) through (6) of this section, identify the oven and battery numbers, and describe the alternative procedure. An alternative procedure must identify whether the coke in that oven is not completely coked, either before, during, or after an oven is pushed.

(8) For each oven observed that exceeds an opacity of 30 percent for any short battery or 35 percent for any tall battery, you must take corrective action and/or increase the coking time in accordance with §63.7291(a). Maintain records documenting conformance with the requirements in §63.7291(a).

(d) For each by-product coke oven battery subject to the work practice standard for soaking in §63.7294(a), you must demonstrate continuous compliance by maintaining records that document conformance with requirements in §63.7294(a)(1) through (5).

(e) For each coke oven battery subject to the work practice standard for quenching in §63.7295(b), you must demonstrate continuous compliance according to the requirements of paragraphs (e)(1) through (3) of this section:

(1) Maintaining baffles in each quench tower such that no more than 5 percent of the cross-sectional area of the tower is uncovered or open to the sky as required in §63.7295(b)(1);

(2) Maintaining records that document conformance with the washing, inspection, and repair requirements in §63.7295(b)(2), including records of the ambient temperature on any day that the baffles were not washed; and

(3) Maintaining records of the source of makeup water to document conformance with the requirement for acceptable makeup water in §63.7295(a)(2).

**§ 63.7335 How do I demonstrate continuous compliance with the operation and maintenance requirements that apply to me?**

(a) For each by-product coke oven battery, you must demonstrate continuous compliance with the operation and maintenance requirements in §63.7300(b) by adhering at all times to the plan requirements and recording all information needed to document conformance.

(b) For each coke oven battery with a capture system or control device applied to pushing emissions, you must demonstrate continuous compliance with the operation and maintenance requirements in §63.7300(c) by meeting the requirements of paragraphs (b)(1) through (3) of this section:

(1) Making monthly inspections of capture systems according to §63.7300(c)(1) and recording all information needed to document conformance with these requirements;

(2) Performing preventative maintenance for each control device according to §63.7300(c)(2) and recording all information needed to document conformance with these requirements; and

(3) Initiating and completing corrective action for a bag leak detection system alarm according to §63.7300(c)(3) and recording all information needed to document conformance with these requirements. This includes records of the times the bag leak detection system alarm sounds, and for each valid alarm, the time you initiated corrective action, the corrective action(s) taken, and the date on which corrective action is completed.

(c) To demonstrate continuous compliance with the operation and maintenance requirements for a baghouse applied to pushing emissions from a coke oven battery in §63.7331(a), you must inspect and maintain each baghouse according to the requirements in §63.7331(a)(1) through (8) and record all information needed to document conformance with these requirements. If you increase or decrease the sensitivity of the bag leak detection system beyond the limits specified in §63.7331(a)(6), you must include a copy of the required written certification by a responsible official in the next semiannual compliance report.

*(d) You must maintain a current copy of the operation and maintenance plans required in §63.7300(b) and (c) onsite and available for inspection upon request. You must keep the plans for the life of the affected source or until the affected source is no longer subject to the requirements of this subpart.*

**§ 63.7342 What records must I keep?**

(a) You must keep the records specified in paragraphs (a)(1) through (3) of this section.

(1) A copy of each notification and report that you submitted to comply with this subpart, including all documentation supporting any initial notification or notification of compliance status that you submitted, according to the requirements in §63.10(b)(2)(xiv).

(2) The records in §63.6(e)(3)(iii) through (v) related to startup, shutdown, and malfunction.

(3) Records of performance tests, performance evaluations, and opacity observations as required in §63.10(b)(2)(viii).

(b) For each COMS or CEMS, you must keep the records specified in paragraphs (b)(1) through (4) of this section.

(1) Records described in §63.10(b)(2)(vi) through (xi).

(2) Monitoring data for COMS during a performance evaluation as required in §63.6(h)(7)(i) and (ii).

(3) Previous (that is, superceded) versions of the performance evaluation plan as required in §63.8(d)(3).

(4) Records of the date and time that each deviation started and stopped, and whether the deviation occurred during a period of startup, shutdown, or malfunction or during another period.

(c) You must keep the records in §63.6(h)(6) for visual observations.

(d) You must keep the records required in §§63.7333 through 63.7335 to show continuous compliance with each emission limitation, work practice standard, and operation and maintenance requirement that applies to you.

**§ 63.7343 In what form and how long must I keep my records?**

(a) You must keep your records in a form suitable and readily available for expeditious review, according to §63.10(b)(1).

(b) As specified in §63.10(b)(1), you must keep each record for 5 years following the date of each occurrence, measurement, maintenance, corrective action, report, or record.

(c) You must keep each record on site for at least 2 years after the date of each occurrence, measurement, maintenance, corrective action, report, or record, according to §63.10(b)(1). You can keep the records offsite for the remaining 3 years.

***[45CSR34 and 40CFR63, Subpart CCCCC]***

## Reporting Requirements

4.5.1. After the effective date of an approved permit in a State under 40 C.F.R. Part 70, the

owner or operator shall submit all notifications and reports required by 40 C.F.R. Part 63 Subpart L to the State permitting authority. Use of information provided by the certified observer shall be a sufficient basis for notifications required under 40 C.F.R. §70.5(c)(9) and the reasonable inquiry requirement of 40 C.F.R. §70.5(d).
**[45CSR34, 40 C.F.R. § 63.311 (a)]**

4.5.2. *Notifications.* The owner or operator shall provide written notification(s) to the Administrator of:

(1) Intention to construct a new coke oven battery (including reconstruction of an existing coke oven battery and construction of a greenfield coke oven battery), a brownfield coke oven battery, or a padup rebuild coke oven battery, including the anticipated date of startup

**[45CSR34, 40 C.F.R. § 63.311 (c)]**

4.5.3. *Semiannual compliance certification.* The owner or operator of a coke oven battery shall include the following information in the semiannual compliance certification:

(1) Certification, signed by the owner or operator, that no coke oven gas was vented, except through the bypass/ bleeder stack flare system of a by-product coke oven battery during the reporting period or that a venting report has been submitted according to the requirements in Section 4.5.4. [40 C.F.R. § 63.311 (e)];

(2) Certification, signed by the owner or operator, that a startup, shutdown, or malfunction event did not occur for a coke oven battery during the reporting period or that a startup, shutdown, and malfunction event did occur and a report was submitted according to the requirements in Section 4.1.22. [40 C.F.R. § 63.310(e)]; and

(3) Certification, signed by the owner or operator, that work practices were implemented if applicable under Section 4.1.6. – 4.1.9. [40 C.F.R. § 63.306].

**[45CSR34, 40 C.F.R. § 63.311 (d)]**

4.5.4. *Report for the venting of coke oven gas other than through a flare system.* The owner or operator shall report any venting of coke oven gas through a bypass/bleeder stack that was not vented through the bypass/bleeder stack flare system to the Administrator as soon as practicable but no later than 24 hours after the beginning of the event. A written report shall be submitted within 30 days of the event and shall include a description of the event and, if applicable, a copy of the notification for a hazardous substance release required pursuant to 40 C.F.R. § 302.6.
**[45CSR34, 40 C.F.R. § 63.311 (e)]**

4.5.5.The permitted quenching operation (Source P001-6, E1 and P004-7) shall comply with the following reporting requirements of 40CFR63, Subpart CCCCC - *National Emissions Standards for Hazardous Air Pollutants for Coke Ovens: Pushing, Quenching, and Battery Stacks*, with the exception of any more stringent limitations set forth in this permit.

**§ 63.7326 How do I demonstrate initial compliance with the emission limitations that apply to me?**

(d) For each by-product coke oven battery stack subject to an opacity limit in §63.7296(a) and each by-product coke oven battery subject to the requirements for quench water in §63.7295(a)(1), you must submit a notification of compliance status containing the results of the COMS performance test for battery stacks and the quench water performance test (TDS or constituent limit) according to §63.7340(e)(1). For each particulate matter emission limitation that applies to you, you must submit a notification of compliance status containing the results of the performance test according to §63.7340(e)(2).

**§ 63.7327 How do I demonstrate initial compliance with the work practice standards that apply to me?**

(a) For each by-product coke oven battery with vertical flues subject to the work practice standards for fugitive pushing emissions in §63.7291(a), you have demonstrated initial compliance if you certify in your notification of compliance status that you will meet each of the work practice requirements beginning no later than the compliance date that is specified in §63.7283.

(d) For each by-product coke oven battery subject to the work practice standards for soaking in §63.7294, you have demonstrated initial compliance if you have met the requirements of paragraphs (d)(1) and (2) of this section:

(1) You have prepared and submitted a written work practice plan in accordance with §63.7294(a); and

(2) You certify in your notification of compliance status that you will meet each of the work practice requirements beginning no later than the compliance date that is specified in §63.7283.

(e) For each coke oven battery, you have demonstrated initial compliance with the work practice standards for quenching in §63.7295(b) if you certify in your notification of compliance status that you have met the requirements of paragraphs (e)(1) and (2) of this section:

(1) You have installed the required equipment in each quench tower; and

(2) You will meet each of the work practice requirements beginning no later than the compliance date that is specified in §63.7283.

(f) For each work practice standard that applies to you, you must submit a notification of compliance status according to the requirements in §63.7340(e)(1).

**§ 63.7328 How do I demonstrate initial compliance with the operation and maintenance requirements that apply to me?**

You have demonstrated initial compliance if you certify in your notification of compliance status that you have met the requirements of paragraphs (a) through (d) of this section:

(a) You have prepared the operation and maintenance plans according to the requirements in §63.7300(b) and (c);

(b) You will operate each by-product coke oven battery and each capture system and control device applied to pushing emissions from a coke oven battery according to the procedures in the plans beginning no later than the compliance date that is specified in §63.7283;

(c) You have prepared a site-specific monitoring plan according to the requirements in §63.7331(b); and

(d) You submit a notification of compliance status according to the requirements in §63.7340(e).

**§ 63.7336 What other requirements must I meet to demonstrate continuous compliance?**

(a) Deviations. You must report each instance in which you did not meet each emission limitation in this subpart that applies to you. This includes periods of startup, shutdown, and malfunction. You must also report each instance in which you did not meet each work practice standard or operation and maintenance requirement in this subpart that applies to you. These instances are deviations from the emission limitations (including operating limits), work practice standards, and operation and maintenance requirements in this subpart. These deviations must be reported according to the requirements in §63.7341.

(b) Startup, shutdowns, and malfunctions.

(1) Consistent with §§63.6(e) and 63.7(e)(1), deviations that occur during a period of startup, shutdown, or malfunction are not violations if you demonstrate to the Administrator's satisfaction that you were operating in accordance with §63.6(e)(1).

(2) The Administrator will determine whether deviations that occur during a period of startup, shutdown, or malfunction are violations, according to the provisions in §63.6(e).

**§ 63.7340 What notifications must I submit and when?**

(a) You must submit all of the notifications in §§63.6(h)(4) and (5), 63.7(b) and (c), 63.8(e) and (f)(4), and 63.9(b) through (h) that apply to you by the specified dates.

(d) If you are required to conduct a performance test, you must submit a notification of intent to conduct a performance test at least 60 calendar days before the performance test is scheduled to begin as required in §63.7(b)(1).

(e) If you are required to conduct a performance test, opacity observation, or other initial compliance demonstration, you must submit a notification of compliance status according to §63.9(h)(2)(ii).

(1) For each initial compliance demonstration that does not include a performance test, you must submit the notification of compliance status before the close of business on the 30th calendar day following the completion of the initial compliance demonstration (December 10, 2006).

(2) For each initial compliance demonstration that does include a performance test, you must submit the notification of compliance status, including the performance test results, before the close of business on the 60th calendar day following completion of the performance test according to §63.10(d)(2).

**§ 63.7341 What reports must I submit and when?**

(a) Compliance report due dates. Unless the Administrator has approved a different schedule, you must submit quarterly compliance reports for battery stacks and semiannual compliance reports for all other affected sources to your permitting authority according to the requirements in paragraphs (a)(1) through (4) of this section.

(1) The first quarterly compliance report for battery stacks must cover the period beginning on the compliance date that is specified for your affected source in §63.7283 and ending on the last date of the third calendar month. Each subsequent compliance report must cover the next calendar quarter.

(2) The first semiannual compliance report must cover the period beginning on the compliance date that is specified for your affected source in §63.7283 and ending on June 30 or December 31, whichever date comes first after the compliance date that is specified for your affected source. Each subsequent compliance report must cover the semiannual reporting period from January 1 through June 30 or the semiannual reporting period from July 1 through December 31.

(3) All quarterly compliance reports for battery stacks must be postmarked or delivered no later than one calendar month following the end of the quarterly reporting period. All semiannual compliance reports must be postmarked or delivered no later than July 31 or January 31, whichever date is the first date following the end of the semiannual reporting period.

(4) For each affected source that is subject to permitting regulations pursuant to 40 CFR part 70 or 40 CFR part 71, and if the permitting authority has established dates for submitting semiannual reports pursuant to 40 CFR 70.6(a)(3)(iii)(A) or 40 CFR 71.6(a)(3)(iii)(A), you may submit the first and subsequent compliance reports according to the dates the permitting authority has established instead of according to the dates in paragraphs (a)(1) through (3) of this section.

(b) Quarterly compliance report contents. Each quarterly report must provide information on compliance with the emission limitations for battery stacks in §63.7296. The reports must include the information in paragraphs (c)(1) through (3), and as applicable, paragraphs (c)(4) through (8) of this section.

(c) Semiannual compliance report contents. Each compliance report must provide information on compliance with the emission limitations, work practice standards, and operation and maintenance requirements for all affected sources except battery stacks. The reports must include the information in paragraphs (c)(1) through (3) of this section, and as applicable, paragraphs (c)(4) through (8) of this section.

(1) Company name and address.

(2) Statement by a responsible official, with the official's name, title, and signature, certifying the truth, accuracy, and completeness of the content of the report.

(3) Date of report and beginning and ending dates of the reporting period.

(4) If you had a startup, shutdown, or malfunction during the reporting period and you took actions consistent with your startup, shutdown, and malfunction plan, the compliance report must include the information in §63.10(d)(5)(i).

(5) If there were no deviations from the continuous compliance requirements in §63.7333(e) for battery stacks, a statement that there were no deviations from the emission limitations during the reporting period. If there were no deviations from the continuous compliance requirements in §§63.7333 through 63.7335 that apply to you (for all affected sources other than battery stacks), a statement that there were no deviations from the emission limitations, work practice standards, or operation and maintenance requirements during the reporting period.

(6) If there were no periods during which a continuous monitoring system (including COMS, continuous emission monitoring system (CEMS), or CPMS) was out-of-control as specified in §63.8(c)(7), a statement that there were no periods during which a continuous monitoring system was out-of-control during the reporting period.

(7) For each deviation from an emission limitation in this subpart (including quench water limits) and for each deviation from the requirements for work practice standards in this subpart that occurs at an affected source where you are not using a continuous monitoring system (including a COMS, CEMS, or CPMS) to comply with the emission limitations in this subpart, the compliance report must contain the information in paragraphs (c)(4) and (7)(i) and (ii) of this section. This includes periods of startup, shutdown, and malfunction.

(i) The total operating time of each affected source during the reporting period.

(ii) Information on the number, duration, and cause of deviations (including unknown cause, if applicable) as applicable and the corrective action taken.

(8) For each deviation from an emission limitation occurring at an affected source where you are using a continuous monitoring system (including COMS, CEMS, or CPMS) to comply with the emission limitation in this subpart, you must include the information in paragraphs (c)(4) and (8)(i) through (xii) of this section. This includes periods of startup, shutdown, and malfunction.

(i) The date and time that each malfunction started and stopped.

(ii) The date and time that each continuous monitoring system (including COMS, CEMS, or CPMS) was inoperative, except for zero (low-level) and high-level checks.

(iii) The date, time, and duration that each continuous monitoring system (including COMS, CEMS, or CPMS) was out-of-control, including the information in §63.8(c)(8).

(iv) The date and time that each deviation started and stopped, and whether each deviation occurred during a period of startup, shutdown, or malfunction or during another period.

(v) A summary of the total duration of the deviation during the reporting period and the total duration as a percent of the total source operating time during that reporting period.

(vi) A breakdown of the total duration of the deviations during the reporting period into those that are due to startup, shutdown, control equipment problems, process problems, other known causes, and other unknown causes.

(vii) A summary of the total duration of continuous monitoring system downtime during the reporting period and the total duration of continuous monitoring system downtime as a percent of the total source operating time during the reporting period.

(viii) An identification of each HAP that was monitored at the affected source.

(ix) A brief description of the process units.

(x) A brief description of the continuous monitoring system.

(xi) The date of the latest continuous monitoring system certification or audit.

(xii) A description of any changes in continuous monitoring systems, processes, or controls since the last reporting period.

(d) Immediate startup, shutdown, and malfunction report. If you had a startup, shutdown, or malfunction during the semiannual reporting period that was not consistent with your startup, shutdown, and malfunction plan, you must submit an immediate startup, shutdown, and malfunction report according to the requirements in §63.10(d)(5)(ii).

(e) Part 70 monitoring report. If you have obtained a title V operating permit for an affected source pursuant to 40 CFR part 70 or 40 CFR part 71, you must report all deviations as defined in this subpart in the semiannual monitoring report required by 40 CFR 70.6(a)(3)(iii)(A) or 40 CFR 71.6(a)(3)(iii)(A). If you submit a compliance report for an affected source along with, or as part of, the semiannual monitoring report required by 40 CFR 70.6(a)(3)(iii)(A) or 40 CFR 71.6(a)(3)(iii)(A), and the compliance report includes all the required information concerning deviations from any emission limitation or work practice standard in this subpart, submission of the compliance report satisfies any obligation to report the same deviations in the semiannual monitoring report. However, submission of a compliance report does not otherwise affect any obligation you may have to report deviations from permit requirements to your permitting authority (P001-6, E1 and P004-7)

Attachment J – Source Specific Requirement for Batteries 1, 2, 3, and 8

***[45CSR13, R13-2591A, 4.5.2., 45CSR34 and 40CFR63, Subpart CCCCC]***

# ATTACHMENT K

## Source Specific Requirements for Boilers 6, 7, 8, 9, and 10

(Reserved)

5.1.1. Reserved.

5.1.2. If US EPA has not promulgated a standard pursuant to 40 C.F.R. 63 for industrial, commercial, institutional boilers and process heaters, the facility shall submit a Part 1 112(j) "equivalent emission limitation by permit" application for case-by-case MACT determination containing the information required in 40 C.F.R. §63.53(a). The Part 1 112(j) application shall identify each affected unit, and address HAP emissions from each of the boilers and process heaters. If the facility determines there are no affected units (boilers or process heaters), a statement of non-applicability must be submitted in lieu of a Part 1 application. A Part 2 112(j) "equivalent emission limitation by permit" application for case-by-case MACT determination containing information required in 40 C.F.R. §63.53(b) is due subsequent to the submittal of the Part 1 application. All 112(j) "equivalent emission limitation by permit" applications must be submitted to both WVDEP-Division of Air Quality, and Chief of Permits and Technical Branch, US EPA Region III, Mail Code 3AP11, 1650 Arch Street, Philadelphia, PA, 19103-2029.

5.1.3. No person shall cause, suffer, allow or permit emission of smoke and/or particulate matter into the open air from any fuel burning unit which is greater than ten (10) percent opacity based on a six minute block average. **[45CSR§2-3.1]**

5.1.4. Compliance with the visible emission requirements of Section 5.1.3. [45CSR§2-3.1.] shall be determined in accordance with 40 C.F.R. Part 60, Appendix A, Method 9 or by using measurements from continuous opacity monitoring systems approved by the Director. The Director may require the installation, calibration, maintenance and operation of continuous opacity monitoring systems and may establish policies for the evaluation of continuous opacity monitoring results and the determination of compliance with the visible emission requirements of Section 5.1.3. [45CSR§2-3.1.]. Continuous opacity monitors shall not be required on fuel burning units which employ wet scrubbing systems for emission control. **[45CSR§2-3.2]**

5.1.5. If the owner or operator of a fuel burning unit can demonstrate to the satisfaction of the Director that compliance with Section 5.1.3. [45CSR§2-3.1.] cannot practically be achieved with respect to soot blowing operations or during the cleaning of a fire box, the Director may formally approve an alternative visible emission standard applicable to the fuel burning unit for soot blowing periods; provided that the exception period shall not exceed a total of six (6) six minute time periods in a calendar day with visible emissions limited to thirty percent (30%) opacity, as determined in accordance with 40 CFR Part 60, Appendix A, Method 9, or by using measurements from a certified continuous opacity monitoring system. **[45CSR§2-3.3]**

5.1.6. The Director may approve an alternative visible emission standard to that required under Section 5.1.3. [45CSR§2-3.1.], not to exceed twenty (20) percent opacity, upon the filing of a written petition by the owner or operator, which petition shall include a demonstration satisfactory to the Director:

a. That it is technologically or economically infeasible to comply with Section 5.1.3. [45CSR§2-3.1.];

b. That emissions from the fuel burning unit for which an alternative visible emission standard is proposed impact no area in which the National Ambient Air Quality Standards for particulate matter are being exceeded nor will any such emissions cause or contribute to a violation of the National Ambient Air Quality Standards for particulate matter in an area which currently meets such standards;

c. That the particulate weight emission standards under section 4 of this rule are being met, as determined in accordance with the Appendix to this rule – "Compliance Test Procedures for 45CSR2";

d. That the fuel burning unit for which an alternative visible emission standard is proposed is at all times operated and maintained in accordance with the provisions of Section 5.1.11. [45CSR§2-9.2.];

(Reserved)

e. That the fuel burning unit for which an alternative visible emission standard is proposed and its associated air pollution control equipment are incapable of being adjusted or operated at normal operating loads to meet the applicable visible emission standard;

f. That the owner or operator will install, calibrate, maintain and operate a continuous opacity monitoring system approved by the Director, for the fuel burning unit for which an alternative visible emission standard is proposed, and will submit the results of such monitoring system to the Director on a calendar monthly basis in a format approved by the Director, provided that this provision shall not apply to fuel burning units which employ wet scrubbing systems for emission control; and

g. That all other requirements of law and rules enforced by the Director will be met. **[45CSR§2-3.4]**

5.1.7. No person shall cause, suffer, allow or permit the discharge of particulate matter into the open air from all fuel burning units located at one plant, measured in terms of pounds per hour in excess of the amount determined as follows:

b. For Type 'b' fuel burning units, the product of 0.09 and the total design heat inputs for such units in million B.T.U.'s per hour, provided however that no more than six hundred (600) pounds per hour of particulate matter shall be discharged into the open air from all such units. Limit for the three boilers is 21.24 lb/hr. **[45CSR§2-4.1.]**

5.1.8. Subject to the provisions of 45CSR2, allowable emission rates for individual stacks shall be determined by the owner and/or operator and registered with the Director at the request of, and on forms provided by, the Director. Such rates shall be subject to review and approval by the Director.

a. The approved set of individual stack allowable emission rates shall become an official part of the compliance schedule and/or any permits concerning such source(s), and shall not be changed without the prior written approval of the Director. **[45CSR§2-4.2.]**

5.1.9. If the number of similar fuel burning units located at one plant, each of which is meeting the requirements of 45CSR2, is expanded by the addition of a new unit(s), the total allowable emission rate for the new unit(s) shall be determined by the following formula. However, the maximum allowable emission rates given in Section 5.1.7. [45CSR§4- 4.1.] are not to be exceeded:

$$\mathbf{R_e = [(1 - (H_{et} - H_e) / H_{et}) R_{et}]}$$

Where,

$R_e$ is the total allowable emission rate in pounds per hour for the new fuel burning unit(s);

$H_{et}$ is the total design heat input in million B.T.U.'s per hour of the existing and new similar units;

$R_{et}$ is the total allowable emission rate in pounds per hour corresponding to $H_{et}$; and

$H_e$ is the total design heat input in million B.T.U.'s per hour for the new fuel burning unit(s).

**[45CSR§2-4.3.]**

5.1.10. The visible emission standards set forth in Section 5.1.3. to 5.1.6. [45 CSR§2-3.] shall apply at all times except in periods of start-ups, shutdowns and malfunctions. Where the Director believes that start-ups and shutdowns are excessive in duration and/or frequency, the Director may require an owner or operator to provide a written report demonstrating that such frequent start-ups and shutdowns are necessary.
**[45CSR§2-9.1.]**

5.1.11. At all times, including periods of start-ups, shutdowns and malfunctions, owners and operators shall, to the extent practicable, maintain and operate any fuel burning unit(s) including associated air pollution control equipment in a manner consistent with good air pollution control practice for minimizing emissions. Determination of whether acceptable operating and maintenance procedures are being used will be based on information available to the Director which may include, but is not limited to, monitoring results, visible emission observations, review of operating and maintenance procedures and inspection of the source.
**[45CSR§2-9.2.]**

5.1.12. The owner or operator of a fuel burning unit(s) subject to this rule shall report to the Director any malfunction of such unit or its air pollution control equipment which results in any excess particulate matter emission rate or excess opacity (i.e., emissions exceeding the standards in Section 5.1.3. to 5.1.9. [45CSR§§2-3 and 4]) as provided in one of the following subdivisions:

a. Excess opacity periods meeting the following conditions may be reported on a quarterly basis unless otherwise required by the Director:

a.1. The excess opacity period does not exceed thirty (30) minutes within any 24-hour period; and

a.2. Excess opacity does not exceed 40%.

b. The owner or operator shall report to the Director any malfunction resulting in excess particulate matter or excess opacity, not meeting the criteria set forth in Section 5.1.12.a. [45CSR§2-9.3.a], by telephone, telefax, or e-mail by the end of the next business day after becoming aware of such condition. The owner or operator shall file a certified written report concerning the malfunction with the Director within thirty (30) days providing the following information:

b.1. A detailed explanation of the factors involved or causes of the malfunction;

b.2. The date and time of duration (with starting and ending times) of the period of excess emissions;

b.3. An estimate of the mass of excess emissions discharged during the

malfunction period;

b.4. The maximum opacity measured or observed during the malfunction;

b.5. Immediate remedial actions taken at the time of the malfunction to correct or mitigate the effects of the malfunction; and

b.6. A detailed explanation of the corrective measures or program that will be implemented to prevent a recurrence of the malfunction and a schedule for such implementation.

**[45CSR§2-9.3.]**

5.1.13. A malfunction, as defined under this rule, constitutes an affirmative defense to an action brought for noncompliance with the weight emission standards under 45CSR§2-4 if the owner or operator demonstrates to the satisfaction of the Director that the requirements of Sections 5.1.12. and 5.1.13. [45CSR§§2-9.2 and 9.3] have been met.
**[45CSR§2-9.4.]**

5.1.14. In any enforcement proceeding, the owner or operator seeking to establish the occurrence of a malfunction has the burden of proof.
**[45CSR§2-9.5.]**

5.1.15. In the event of an unavoidable shortage of fuel having characteristics or specifications necessary for a fuel burning unit to comply with the visible emission standards set forth in 45CSR§2-3 or any emergency situation or condition creating a threat to public safety or welfare, the Director may grant an exception to the otherwise applicable visible emission standards for a period not to exceed fifteen (15) days, provided that visible emissions during the exception period do not exceed a maximum six (6) minute average of thirty (30) percent and that a reasonable demonstration is made by the owner or operator that the emission standards under 45CSR§2-4 will not be exceeded during the exemption period.
**[45CSR§2-10.1.]**

5.1.16. Boiler #5 (Emission Point ID Stack 11) shall not be operated unless the permittee obtain the proper permit from the Director prior to restarting the boiler.
**[45CSR13, R13-1939A, A.21.]**

5.1.17. The permittee shall fire only natural gas at coke plant boiler #8 (Emission Point ID Stack 12), unless an applicable permit is obtained from the Director.
**[45CSR13, R13-1939A, A.22.]**

5.1.18. For the purposes of maintaining compliance with the sulfur dioxide emission limits in Sections 8.1.5. and 5.1.1., the hydrogen sulfide concentration level in the COG stream from the by-products plant shall not exceed 50 grains of hydrogen sulfide per one hundred (100) cubic feet of COG except as noted in Section 8.1.8. Compliance with the allowable hydrogen sulfide concentration level shall be based on three (3) hour averaging periods.
**[45CSR13, R13-1939A, A.5.]**

## Monitoring Requirements

5.2.1. The owner or operator of a fuel burning unit(s) shall monitor compliance with Sections 5.1.3 – 5.1.6. [45CSR§2-3] as set forth in an approved monitoring plan for each emission unit. Such monitoring plan(s) shall include, but not be limited to, one or more of the following: continuous measurement of emissions, monitoring of emission control equipment, periodic parametric monitoring, or such other monitoring as approved by the Director.

a.1. Direct measurement with a certified continuous opacity monitoring system (COMS) shall be deemed to satisfy the requirements for a monitoring plan. Such COMS shall be installed, calibrated, operated and maintained as specified in 40 C.F.R. Part 60, Appendix B, Performance Specification 1 (PS1). COMS meeting the requirements of 40 C.F.R. Part 75 (Acid Rain) will be deemed to have satisfied the requirements of PS1.

a.2. Monitoring plans pursuant to Sections 5.2.1. [45CSR§2-8.2.a.] shall be submitted to the Director within six (6) months of the effective date of 45CSR2. Approval or denial of such plans shall be within twelve (12) months of the effective date of 45CSR2 or six (6) months after receipt of the monitoring plan, whichever is later. The owner or operator may presume approval until notified otherwise.

a.3. Excursions outside the range of operating parameters associated with control or process equipment which are established in an approved monitoring plan will not necessarily constitute a violation of 45CSR2.

**[45CSR§2-8.2.a.]**

5.2.2. For the purpose of determining compliance with the operating and emission limits set forth by Section 5.1.19., 5.1.20, 5.1.21, and 5.1.22., of this permit, the permittee shall monitor the fuel consumption and operating schedule of Sources P017, P018, P019, S1 and S5.

**[45CSR13, R13-2591A, 4.2.1.]**

5.2.3. For the purpose of determining compliance with the continuous hydrogen sulfide monitoring requirements set forth by Section 5.1.19 – 5.1.21. of this permit, the permittee shall operate and maintain existing continuous hydrogen sulfide monitors in accordance with the requirements set forth by 40 CFR 60.13; 40 CFR Part 60, Appendix B - Performance Specifications 7; and 40 CFR Part 60, Appendix F - Quality Assurance Procedure Number 1.

**[45CSR13, R13-2591A, 4.2.2.]**

5.2.4. For the purpose of determining compliance with the carbon monoxide concentration limits set forth by Section 5.1.20(6) and 5.1.21(6) of this permit, the permittee shall install, operate, and maintain flue gas oxygen analyzers and fuel flow meters for Boiler #9 and Boiler #10. Emissions data electronically recorded and maintained by these monitoring systems shall include the hourly and three-hour block average value of the oxygen content and fuel flow.

**[45CSR13, R13-2591A, 4.2.3.]**

## Testing Requirements

5.3.1. See Sections 3.3.2. through 3.3.5. (see Attachment I)

5.3.2. The owner or operator of a fuel burning unit(s) shall demonstrate compliance with Sections 5.1.3. – 5.1.6. [45CSR§2-3] by periodic testing in accordance with 40 C.F.R. Part 60, Appendix A, Method 9, or a certified continuous opacity monitoring system, as approved by the Director, and Sections 5.1.7. – 5.1.9. [45CSR§2-4] by periodic particulate matter stack testing, conducted in accordance with the appropriate test method set forth in the 45CSR2 Appendix or other equivalent EPA approved method approved by the Director. The owner or operator shall conduct such testing at a frequency to be established by the Director.
**[45CSR§2-8.1.a.]**

5.3.3. At such reasonable times as the Director may designate, the owner or operator of any fuel burning unit(s) may be required to conduct or have conducted tests to determine the compliance of such unit(s) with the emission limitations of Sections 5.1.7. – 5.1.9. [45CSR§2-4]. Such tests shall be conducted in accordance with the appropriate method set forth in the 45CSR2 Appendix or other equivalent EPA approved method approved by the Director. The Director, or his duly authorized representative, may at his option witness or conduct such tests. Should the Director exercise his option to conduct such tests, the operator will provide all necessary sampling connections and sampling ports located in such manner as the Director may require, power for test equipment, and the required safety equipment such as scaffolding, railings and ladders to comply with generally accepted good safety practices.

b.1. Sufficient information on temperatures, velocities, pressures, weights and dimensional values shall be reported to the Director, with such necessary commentary as he may require to allow an accurate evaluation of the reported test results and the conditions under which they were obtained.
**[45CSR§2-8.1.b.]**

5.3.4. The Director, or his duly authorized representative, may conduct such other tests as he may deem necessary to evaluate air pollution emissions other than those noted in Section 5.1.7. [45CSR§2-4.1].
**[45CSR§2-8.1.c.]**

## Recordkeeping Requirements

5.4.1. The owner or operator of a fuel burning unit(s) shall maintain on-site all records of monitored data established in the monitoring plan pursuant to Section 5.2.1. [45CSR§2-8.2.a.]. Such records shall be made available to the Director or his duly authorized representative upon request. Such records shall be retained on-site for a minimum of five years.
**[45CSR§2-8.3.a.]**

5.4.2. The owner or operator shall maintain records of the operating schedule and the quantity and quality of fuel consumed in each fuel burning unit in a manner to be established by the Director. Such records are to be maintained on-site and made available to the Director or his duly authorized representative upon request.
**[45CSR§2-8.3.c.]**

5.4.3. Where appropriate the owner or operator of a fuel burning unit(s) may maintain such records in electronic form.
**[45CSR§2-8.3.d.]**

5.4.4. For the purpose of documenting the monitoring activities of Section 5.2.2. of this permit, the permittee shall maintain records of the fuel consumption and operating schedules for each boiler affected by Section 5 of this permit.
**[45CSR13, R13-2591A, 4.4.1.]**

5.4.5. For the purpose of documenting the continuous monitoring activities of Section 5.2.3. and 5.2.4. of this permit, the permittee shall maintain records of the recorded emissions data for each of the affected emission points. **[45CSR13, R13-2591A, 4.4.2.]**

## Reporting Requirements

5.5.1. The owner or operator shall submit a periodic exception report to the Director, in a manner and at a frequency to be established by the Director. Such exception report shall provide details of all excursions outside the range of measured emissions or monitored parameters established in an approved monitoring plan, and shall include, but not be limited to, the time of the excursion, the magnitude of the excursion, the duration of the excursion, the cause of the excursion and the corrective action taken. **[45CSR§2-8.3.b.]**

(Reserved)

# ATTACHMENT L

## Source Specific Requirements for Coal Handling and Coke Sizing/Screening

(Reserved)

6.1.1. Total particulate matter and $PM_{10}$ emissions from Coal Crushing/Crusher shall not exceed 1.0 lb/hr and 0.51 lb/hr, respectively.
**[CO-SIP-91-29, Section III.1.A.]**

6.1.2. The coal crusher is housed within a fully enclosed structure that shall be maintained to achieve and assure a minimum 90% control efficiency of potential (uncontrolled) emissions of total particulate matter and $PM_{10}$.
**[CO-SIP-91-29, Section III.1.B.]**

6.1.3. There shall be no visible emissions from any point of the building housing the Coal Crushing/Crusher operations.
**[CO-SIP-91-29, Section III.1.C.]**

6.1.4. Compliance with Sections 6.1.1, 6.1.2., and 6.1.3.[Sections III.1.A., B. and C.] shall be demonstrated on and after November 14, 1991.
**[CO-SIP-91-29, Section III.1.D.]**

6.1.5. Compliance with 6.1.1, 6.1.2., and 6.1.3.[Sections III.1.A., B. and C.] shall be determined in accordance with the provisions of Sections 3.3.2. through 3.3.5.and Appendix B(B1) of this permit. Only visible emission standards shall be applicable for emission control by passive (non-evacuated) full enclosure.
**[CO-SIP-91-29, Section III.1.E.]**

6.1.6. Total particulate matter and $PM_{10}$ emissions from Coke Sizing and Screening operations at Stations No. 1 and No. 2 shall not exceed 1.48 lb/hr and 0.76 lb/hr, respectively from each station.
**[CO-SIP-91-29, Section III.2.A.]**

6.1.7. Coke Sizing and Screening operations at Stations No. 1 and No. 2 shall be performed within the existing fully enclosed structures that shall be maintained so as to achieve and assure a minimum 90% control efficiency of potential (uncontrolled) emissions of total particulate matter and $PM_{10}$.
**[CO-SIP-91-29, Section III.2.B.]**

6.1.8. There shall be no visible emissions exceeding 5% opacity from any point of the structures housing the Coke Sizing and Screening operations at Stations No. 1 and No. 2.
**[CO-SIP-91-29, Section III.2.C.]**

6.1.9. Compliance with Sections 6.1.6, 6.1.7., and 6.1.8. [Sections III.2.A., B., and C.] shall be achieved on and after the date of entry of this Consent Order.
**[CO-SIP-91-29, Section III.2.D.]**

6.1.10. Compliance with Sections 6.1.6, 6.1.7., and 6.1.8. [Sections III.2.A., B. and C.] shall be determined in accordance with provisions of Sections 6.3.1. through 6.3.3. [Section IV] and Appendix B (B1) of this Consent Order. Only visible emission standards shall be applicable for emission control by passive (non-evacuated) full enclosure.
**[CO-SIP-91-29, Section III.2.E.]**

Attachment L – Source Specific Requirements for Coal Handling and Coke Sizing and Screening

**Monitoring Requirements**

6.2.1. See Section 3.2 (see Attachment I)

**Testing Requirements**

6.2.2. 6.3.1 See Sections 3.3.2. through 3.3.4. (see Attachment I)

**Recordkeeping Requirements**

6.2.3. 6.4.1. See Section 3.4 (see Attachment I)

**Reporting Requirements**

6.5.1. See Section 3.5 (see Attachment I)

# ATTACHMENT M

## Source Specific Requirements for Plant Roadways and Parking

(Reserved)

(Reserved)

7.1.1. The Company shall continue to comply with dust control measures on all unpaved roads identified in this Section in a manner that achieves and assures 95% control efficiency as determined by methodology set forth in the USEPA reference document Control of Open Fugitive Dust Sources (EPA/450/3-88-008), Section 3.0, Unpaved Roads and in accordance with the following:

1. All unpaved roads in Appendix C, Table 1, shall be treated at least every three weeks (tri-weekly) following the initial establishment of chemical ground inventory with a chemical dust suppressant (petroleum resin emulsion, asphalt emulsions or acrylic cements) on a year-round (12 month) basis, except as provided under Section 7.1.1.5. and 7.1.12.

2. Tri-weekly applications shall be accomplished within twenty-three (23) days of prior applications except as provided under Section 7.1.1. 5.

4. A minimum ground inventory of 0.25 gallons of concentrate per square yard of road surface, as specified in Section 3.0 of the USEPA reference document *Control of Open Fugitive Dust Sources* (EPA/450/3-88-008) shall be maintained.

5. Tri-weekly applications of dust suppressant may be delayed by not more than three (3) days from any scheduled date upon which the unpaved road surface is frozen, snow covered, or has experienced $\geq$ 0.25 inches of rainfall.

In the event of persistent adverse weather conditions such as freezing, snow cover, or excessive rainfall, the Company may petition the Director verbally with written confirmation provided in quarterly report for extended exemptions which may be granted as deemed appropriate by the Director. **[CO-SIP-91-29, Section III.5.A.]**

7.1.2. The Company shall continue to comply with dust control measures on all unpaved parking lots, laydown, entrance, loading, unloading areas, berms, and irregular paved surfaces that can not be adequately cleaned under the provisions of Section 7.1.7. through 7.1.9. in accordance with the following:

1. After the initial treatment to establish the required ground inventory of chemical dust suppressant within the first 2 months of the unpaved surface dust control program, all unpaved areas and irregular paved surfaces identified in Table 1 of Appendix C shall be treated with chemical dust suppressant (petroleum resin emulsion, asphalt emulsion or acrylic cements) at least at the frequencies set forth in Appendix C, Table 1 on a year round (12 month) basis.

2. Monthly and quarterly applications shall be made before the end of the first full week of the month/quarter except that the Company may seek extensions of time due to persistent adverse weather conditions in accordance with Section 7.1.1.5.

3. For each monthly/quarterly application after the initial 2 month treatment period, the concentrated dust suppressant shall be diluted at a ratio of not more than seven (7) parts water to one (1) part concentrate and the resulting solution shall be applied at a minimum coverage rate of 0.5 gallons per square yard of surface area. **[CO-SIP-91-29, Section III.5.B.]**

7.1.3. Compliance with Sections 7.1.1. and 7.1.2. shall be determined in accordance with procedures described in Appendix B(2) of this permit.
**[CO-SIP-91-29, Section III.5.C.]**

7.1.4. Control Equipment

The Company shall assure the availability, required scheduling, and proper maintenance of spray trucks that are designed and equipped, at minimum with a 2,000 gallon capacity tank, a spray bar system capable of applying the dust suppressant solution at a coverage rate of at least 1.3 gallons per square yard of surface, a certified flow metering device calibrated in units of gallons per minute, and apparatus that will facilitate manual application of the solution to areas not readily accessible by the spray truck.
**[CO-SIP-91-29, Section III.5.D.]**

7.1.5. The Company shall continue to implement the dust control measures of Sections 7.1.1. through 7.1.4.
**[CO-SIP-91-29, Section III.5.F.]**

7.1.6. The Company shall implement, maintain, and comply with dust control measures on all paved roads identified in this Section in a manner that achieves and assures 95% control efficiency as determined by methodology set forth in the USEPA reference document *Control of Open Fugitive Dust Sources* (EPA/450/3-88-008), Section 2.0, Paved Roads, and in accordance with the following:

1. All paved roads identified in Table 1 of Appendix C of this permit shall be cleaned via concurrent water flushing and vacuum sweeping on a daily, year-round (12 month) basis except as provided under Section 7.1.7.1.a. and b.

   a. Daily flushing and sweeping may be suspended only under the following adverse weather conditions:

| Weather Condition | Permitted Exemption |
|---|---|
| ≥ 0.25 inches rainfall | Flushing |
| Freezing surface | Flushing |
| Snow cover | Flushing and sweeping |

   All such suspensions shall be reported and verified as required under Sections 7.4.2. through 7.4.5. (Recordkeeping and Reporting).

   b. Irregular paved surfaces that cannot feasibly or adequately be cleaned by vacuum sweeping shall be chemically sprayed in accordance with provisions of Sections 7.1.1. through 7.1.5. **[CO-SIP-91-29, Section III.6.A.]**

7.1.7. Compliance with Section 7.1.7. shall be determined in accordance with procedures set forth in Appendix C of this permit.
**[CO-SIP-91-29, Section III.6.B.]**

7.1.8. Control Equipment

1. The Company shall assure the availability, required scheduling, and proper maintenance of vacuum sweeping trucks. These trucks shall be equipped with an adequate water tank and a spray bar mounted ahead of the brooms unless separate vehicles are utilized for flushing. The collection hopper of the vacuum truck shall be designed and maintained so as to prevent fugitive dust emissions.

2. Material collected by the vacuum sweeping truck shall be handled and disposed of in a manner that minimizes fugitive dust emissions, including but not limited to, wet dumping and chemical treatment or stabilization of stored material. **[CO-SIP-91-29, Section III.6.C.]**

7.1.9. The Company shall continue to implement the dust control measures of Sections 7.1.7. through 7.1.9.
**[CO-SIP-91-29, Section III.6.E.]**

7.1.10. The Company has the right to petition the Director and the USEPA for written approval of definitive treatment methods, treatment schedules and procedures or reporting requirements different from those required herein. Such alternative practices must be demonstrated to the Commission and USEPA to result in equivalent dust control effectiveness in accordance with *Control of Open Fugitive Dust Sources* (EPA/450/3-88-008). Notwithstanding the provision of Section 7.3.1. (Paragraph VI.1.) of Consent Order (CO-SIP-91-29), the Company reserves the right to contest any disapproval of such petition in the appropriate judicial forum.
**[CO-SIP-91-29, Section III.7.A.]**

7.1.11. In the event that the Company certifies that all of a roadway or parking area identified in Appendix C has been discontinued, the dust suppression or surface cleaning program for that road or parking lot may be terminated or reduced. If the Company begins to utilize any new roadway, parking lot or other vehicular activity area not shown in Appendix C, it must notify the Director in the reports required under Consent Order (CO-SIP-91-29) and treat or clean the road or area in accordance with the procedures contained herein.
**[CO-SIP-91-29, Section III.7.B.]**

7.1.12. The Director shall not be precluded from requiring adjustments, including increased chemical suppressant application or cleaning, if on-site inspections reveal that the program contained herein does not prevent excessive visible dust entrainment and emissions from a particular road or surface.
**[CO-SIP-91-29, Section III.7.C.]**

7.1.13. In the event that an unpaved road or area that has been chemically treated becomes completely hardened and cemented by such treatment so as to become like a paved road as demonstrated by observation, by compaction tests and silt analyses or in the event that the Company paves any unpaved haul road or area, that road or area may be treated as a paved surface and cleaned in accordance with the procedures outlined in Sections 7.1.7. through 7.1.9.
**[CO-SIP-91-29, Section III.7.D.]**

## Monitoring Requirements

7.2.1. See Section 3.2.

## Testing Requirements

7.3.1. See Sections 5.3.1 through 5.3.4. and Appendix B of this permit.

## Recordkeeping Requirements

7.4.1. The Company shall maintain records relative to the program to control emissions from unpaved roads, parking lots, laydown, entrance, unloading areas and berms identified in Appendix C, Table 1. These records shall include, at a minimum, the following information:

a. Control equipment maintenance records.

b. Scheduled and unscheduled equipment malfunctions and downtime.

c. Meteorological log to include average daily temperature, daily precipitation and unusual meteorological occurrences.

d. The date, type and quantity received for each delivery of chemical dust suppressants.

e. For each dust suppressant application date, start and stop times, average truck speed, number of passes and amount of solution applied for each unpaved road, area or berm identified in Appendix C, Table 1.

f. Identification of areas where manual spraying was utilized. **[CO-SIP-91-29, Section III.5.E.1.]**

7.4.2. Records in Sections 7.4.1. and 7.4.5. shall be retained by the Company for three (3) years and shall be made available to the Director or his representative upon request. **[CO-SIP-91-29, Section III.5.E.2., 6.D.2.]**

7.4.3. A calendar quarterly report shall be submitted to the Director. The report shall contain all of the information cited in Sections 7.4.1. and 7.4.5. and a description of any deviations from the control program and the reasons for such deviations. The report shall be certified to be accurate by management and shall be submitted by the end of the month following the calendar quarter. **[CO-SIP-91-29, Section III.5.E.3. and 6.D.3.]**

7.4.4. The Company shall notify the Director, in writing, of any non-compliance with Sections 7.1.1. through 7.1.5. and Sections 7.1.6. through 7.1.9. Such notice shall be submitted quarterly and shall include a detailed explanation of the cause of such non-compliance, all remedial actions required, and the date by which compliance was or will be re-established. **[CO-SIP-91-29, Section III.5.E.4. and 6.D.4.]**

7.4.5. The Company shall maintain daily records for the paved road cleaning program, Sections 7.1.6. through 7.1.9.. These records shall include, at a minimum, the following information:

a. Control equipment maintenance records.

b. Scheduled and unscheduled equipment malfunctions and downtime.

c. Meteorological log to include average daily temperature, daily precipitation and unusual meteorological occurrences.

d. Qualitative description of the road surface conditions.

e. Start and stop times, average truck speed, number of passes and estimation of amount of water used for each paved road identified in Appendix C, Table 2.

f. Identification of areas where chemical treatment was utilized.

g. Qualitative descriptions of areas of unusually high silt loadings from spills and track-ons.

h. Total amount of dust collected by vacuum trucks in pounds or tons.
**[CO-SIP-91-29, Section III.6.D.1.]**

## Reporting Requirements

7.5.1. See Section 3.5.

# ATTACHMENT N

## Source Specific Requirements for By-Product Plant

(Recessed)

(Reserved)

8.1.1. Emissions from the coal tar loading station (ID P021-22), Emission Point ID F34, shall not exceed the following:

| POLLUTANT | lb/hr | ton/yr |
|---|---|---|
| BENZENE | 1.89 | .426 |
| TOLUENE | .42 | .094 |
| XYLENES | .09 | .022 |
| INDENE | .07 | .017 |
| NAPHTHALENES | .17 | .038 |
| STYRENE | .04 | .010 |
| | | |

**[45CSR13, R13-1652, (A) 1.]**

8.1.2. Fill rate of rail tank cars shall not exceed 20,000 gallons per hour, 40,000 gallons per day, and 6 million gallons per year of coal tar. **[45CSR13, R13-1652, (A) 2.]**

8.1.3. The permittee shall continue the established leak detection and repair program as per Subparts L and V of 40 C.F.R. Part 61. **[45CSR13, R13-1652, (A) 3.]**

8.1.4. The permitted facility must be constructed and operated in accordance with information filed in Permit Application No. 1652. The Director may suspend or revoke a permit if the plans and specifications upon which the approval was based are not adhered to. **[45CSR13, R13-1652, General Requirements 3.]**

8.1.5. Maximum emissions to the atmosphere from the Excess Coke Oven Gas (COG) Flare (Emission Point P024-1) shall not exceed the following limits:

| Pollutant | Hourly Emissions (lb/hr) | Maximum Hourly Emissions during the Desulfurization Outage (lb/hr) | Annual Emissions* (tpy) |
|---|---|---|---|
| Carbon Monoxide | 62.2 | 62.2 | 273.3 |
| Nitrogen Oxides | 11.4 | 11.4 | 50.1 |
| Particulate Matter | 2.0 | 2.0 | 8.8 |
| PM-10 | 2.0 | 2.0 | 8.8 |
| Sulfur Dioxide | 39.8 | 396* | 294.0 |
| Volatile Organic Compounds | 23.5 | 23.5 | 103.0 |

* Annual Emission accounts for the desulfurization unit being down 672 hours per year for schedule maintenance and maximum hydrogen sulfide concentration of 479 grains per 100 cu. ft. of COG

**[45CSR13, R13-1939A, A.1.]**

8.1.6. For the purposes of maintaining compliance with the annual emission limits in Section 8.1.5., the daily flow rate of COG to the excess COG flare (Emission Point P024-1) shall not exceed 7.1 MM standard cubic feet per day over a thirty day rolling average. The permittee shall keep daily records of flow rate of COG to the flare and correct the measured flow rate to a standard temperature of 68$^{0}$F. Compliance shall be determine using a thirty day rolling average. **[45CSR13, R13-1939A, A.2.]**

8.1.7. For the purposes of maintaining compliance with the sulfur dioxide emission limits in Sections 8.1.5. and 5.1.1., the hydrogen sulfide concentration level in the COG stream from the by-products plant shall not exceed 50 grains of hydrogen sulfide per one hundred (100) cubic feet of COG except as noted in Section 8.1.8. Compliance with the allowable hydrogen sulfide concentration level shall be based on three (3) hour averaging periods. **[45CSR13, R13-1939A, A.5.]**

8.1.8. For the purpose of maintaining compliance with the sulfur dioxide emission limits in Sections 8.1.5. and 5.1.1., while the desulfurization unit is down for scheduled maintenance, the permittee shall calculate and record the hourly sulfur dioxide emission rate of the flare and boilers #6 and #7 over a 24-hour period using the recorded mean hydrogen sulfide concentration level and the recorded standard flow rate for the respective day. Such records shall be maintained on site for a period of at least five years and be made available to the Director or his/her duly authorized representative upon request. **[45CSR13, R13-1939A, A.6.]**

8.1.9. The permittee shall be limited to a maximum of twenty-eight (28) days in any calendar year for planned maintenance outages of the desulfurization unit in the coke by-products recovery plant. No single scheduled outage period shall extend beyond 336 hours. The start of a planned maintenance shall begin at the time of the first hour of a three-hour average concentration that is greater than 50 grains of $H_2S$/100 cubic feet of COG. The planned maintenance shall be concluded when at the time of the first hour of a three-hour average concentration that is less than or equal to 50 grains of $H_2S$/100 cubic feet of COG. **[45CSR13, R13-1939A, A.7.]**

8.1.10. The permittee shall notify the Director in writing thirty (30) days prior to undertaking any planned maintenance outage of the desulfurization unit. Such notice shall include, at a minimum, a detailed explanation of each and every maintenance and/or repair activity intended to be undertaken and a schedule for completion of each such activity, as well as evidence of compliance with the Sections 8.1.11. and 8.1.12..
**[45CSR13, R13-1939A, A.8.]**

8.1.11. The permittee shall select the period for the planned maintenance outage that would prevent to the greatest extent practicable any violation of the National Ambient Air Quality Standard ("NAAQS") for sulfur dioxide, utilizing, at a minimum, air quality dispersion modeling to determine what periods represent the most favorable dispersion of excess sulfur dioxide emissions. To ensure maintenance of the 24-hour NAAQS for $SO_2$, a modeling target for $SO_2$ concentration for the high 24-hour value of 265 $\mu g/m^3$ shall be used to provide a margin of 100 $\mu g/m^3$ for other source impacts within the immediate vicinity of this facility.
**[45CSR13, R13-1939A, A.9.]**

8.1.12. Prior to any planned maintenance outage of the desulfurization unit, the permittee shall prepare and submit a $SO_2$ mitigation plan to the Director outlining what measures the permittee will employ during the outage to ensure continued attainment of the NAAQS. This plan shall include the employment of all feasible control measures and process changes at the Follansbee Facility to reduce $SO_2$ emissions from the Follansbee Facility, including, but not limited to reduction of the coke production rate at the Coke Oven Batteries #1, #2, #3 and #8. **[45CSR13, R13-1939A, A.10.]**

8.1.13. No latter than thirty (30) days after completing a planned maintenance outage of the desulfurization unit, the permittee shall submit a report identifying the sulfur dioxide impacts associated with the planned maintenance outage of the desulfurization unit. This report shall include any deviation of the $SO_2$ mitigation plan that was submitted for the respective outage period. **[45CSR13, R13-1939A, A.11.]**

8.1.14. Visible emissions from the excess COG flare (Emission Point P024-1) shall not exceed twenty percent (20%) opacity except upon the first eight (8) minutes of starting the thermal oxidizer then the visible emissions from this emission point shall not exceed forty percent (40%) opacity for this time period. The permittee shall demonstrate compliance with this condition by taking visual observations using U.S. EPA Method 22 once a month. Should the permittee observe visible emissions from the flare using Method 22, then the permittee shall conduct an additional observation within 24-hours of the Method 22 using U.S. EPA Method 9 to determine the opacity of the visible emissions being emitted from the flare. **[45CSR13, R13-1939A, A.12.]**

8.1.15. The permittee shall operate and maintain a continuous hydrogen sulfide monitor and recorder for the purpose of monitoring the hydrogen sulfide concentration of the sweetened COG before being routed to any combustion unit or source utilizing COG. This monitor shall be installed and maintained in accordance with Performance Specification 7-Specifications and Test Procedures for Hydrogen Sulfide Continuous Emission Monitoring System in Stationary Sources of Appendix B of 40 C.F.R. 60. The permittee shall develop and implement quality assurance measures and procedures to ensure the accuracy of this monitor in accordance with Appendix F to Part 60-Quality Assurance Procedures of Chapter 40 of the Code of Federal Regulations. Such records of the measurements and calibration reports shall be maintained on site for a period of at least five years and be made available to the Director or his/her duly authorized representative upon request. **[45CSR13, R13-1939A, A.14.]**

8.1.16. The permittee shall maintain in accordance with the manufacture's instructions flow-measuring devices for the purpose of measuring and recording the amount of COG consumed by the excess COG flare and Boilers #6 and #7. The permittee shall keep daily records of the amount of COG consumed by the above mentioned units. Such records shall be maintained on site for a period of at least five years and be made available to the Director or his/her duly authorized representative upon request.
**[45CSR13, R13-1939A, A.15.]**

8.1.17. The permittee shall maintain the automatic re-ignition system in accordance with the manufacture's specifications. **[45CSR13, R13-1939A, A.16.]**

8.1.18. The permittee shall not vent any un-combusted COG into the open atmosphere through excess COG flare (Emission Point P024-1). The permittee shall record the date and time of an event when the flare was not in operation and COG was being emitted to the atmosphere at Emission Point P024-1. The permittee shall submit a report explaining this event and measures the permittee is taking to prevent the event from re-occurring. Such records shall be maintained on site for a period of at least five years and be made available to the Director or his/her duly authorized representative upon request.
**[45CSR13, R13-1939A, A.17.]**

8.1.19. The permittee shall continuously maintain a system around this permitted facility to prevent the general public from accessing the facility. **[45CSR13, R13-1939A, A.18.]**

8.1.20. Compliance with the allowable emission limits stated in Section 8.1.5. of this permit shall be calculated using the appropriate amount of COG combustion by the excess COG flare on a volumetric basis, higher heat value of 568 Btu/cu. ft. for COG, and the following factors: Carbon Monoxide (0.37 lb/MM Btu), Nitrogen oxides (0.068 lb/MM Btu), Particulate Matter (0.012 lb/MM Btu) Particulate Matter 10 microns (0.012 lb/MM Btu), Volatile Organic Compounds (0.14 lb/MM Btu). The permittee shall determine the amount of each pollutant emitted on monthly basis using the above mentioned information and appropriate engineering calculations. The permittee shall keep a 12 month rolling total for each of above mentioned pollutants.
**[45CSR13, R13-1939A, A.19.]**

8.1.21. The following condition only applies when the permittee is conducting an approved planned maintenance outage as permitted in Secrion 8.1.10. of this permit. In the event of unforeseen circumstance beyond the control of the permittee, the permittee may exceed the $SO_2$ emission limit for the flare as stated in Section 8.1.5. of this permit in order to prevent an anticipated excursion of the $SO_2$ NAAQS from occurring in the local area , which include the city of Weirton, WV. The permittee shall document in the Desulfurization System Outage Report the unforeseen circumstances, $SO_2$ emissions rate calculation, and modeling results to document the necessity of the temporary increase in the flare's $SO_2$ allowable emissions rate. **[45CSR13, R13-1939A, A.20.]**

8.1.22. The permitted facility shall be constructed and operated in accordance with information filed in Permit Application R13-1939A, R13-1939 and any amendments thereto. The Director may suspend or revoke a permit if the plans and specifications upon which the approval was based are not adhered to. **[45CSR13, R13-1939A, C.3.]**

8.1.23. Incinerators, including all associated equipment and grounds, shall be designed, operated and maintained so as to prevent the emission of objectionable odors.
**[45CSR§6-4.6., 45CSR13, R13-1939A, B.3.]**

8.1.24. The permittee shall comply with all applicable provisions of 45CSR4, 45CSR6, 45CSR10, 45CSR13, 45CSR14, and 45CSR30, provided that the permittee shall comply with any more stringent requirements as may be forth under Sections 8.1.5. through 8.1.21. of this permit. **[45CSR13, R13-1939A, B.1.]**

8.1.25. Any owner or operator of a by-product coke production facility in existence on the effective date of 45CSR10 who can demonstrate to the Director that there is no practical alternative to scheduled maintenance (including shutdown) of desulfurization equipment may request the approval of an enforceable, temporary sulfur dioxide emissions control and mitigation plan for such maintenance period. In order for a plan under 45CSR§10-5 to be approved the plan must meet the following conditions:

10-5.2.b. Provide for a definitive reduction in sulfur dioxide emissions by the establishment of unit-specific allowable emission rates for all emissions units of the stationary source sufficient to prevent any violation of federal and state ambient air quality standards or applicable air quality increments for sulfur dioxide.

10-5.2.c. Provide that system down-time and excess sulfur dioxide emissions be reduced to the greatest extent possible by use of increased or contract maintenance personnel, maximized maintenance labor shifts and optimization of available spare parts inventories.

10-5.2.g. Provide for annual review, if necessary, modification or termination of the plan by the Director.

10-5.2.h. Provide that the Director may impose limitations on emission units that are more restrictive than those provided for in the plan as necessary to assure attainment of air quality standards for sulfur dioxide in light of data provided pursuant to 45CSR§10-5.2.f, or any other information available to the Director.

**[45CSR§10-5.2., 45CSR13, R13-1939A, B.4.]**

8.1.26. The Director shall, in making a determination concerning plan modification or termination, review the plant's compliance history and records to determine whether the plan has prevented or minimized, to the extent feasible, desulfurization system outages and excess emissions. The initial approval of the plan and any modification of the plan shall be accomplished as a revision to the State Implementation Plan.
**[45CSR§10-5.3., 45CSR13, R13-1939A, B.4.]**

8.1.27. Due to unavoidable malfunction of equipment or inadvertent fuel shortages, emissions exceeding those provided for in this rule may be permitted by the Director for periods not to exceed ten (10) days upon specific application to the Director. Such application shall be made within twenty-four (24) hours of the equipment malfunction or fuel shortage. In cases of major equipment failure or extended shortages of conforming fuels, additional time periods may be granted by the Director provided a corrective program has been submitted by the owner or operator and approved by the Director. **[45CSR§10-9.1., 45CSR13, R13-1939A, B.4.]**

8.1.28. The provisions of 40 C.F.R. Part 61 Subpart L apply to each of the following sources at furnace coke by-product recovery plants: tar decanters, tar storage tanks, tar-intercepting sumps, flushing-liquor circulation tanks, light-oil sumps, light-oil condensers, light-oil decanters, wash-oil decanters, wash-oil circulation tanks, naphthalene processing, final coolers, final-cooler cooling towers, and the following equipment that are intended to operate in benzene service: pumps, valves, exhausters, pressure relief devices, sampling connection systems, open-ended valves or lines, flanges or other connectors, and control devices or systems required by Section 8.1.39. – 8.1.46. [40 C.F.R. § 61.135].
**[45CSR15, 40 C.F.R. § 61.130 (a)]**

8.1.29. The provisions of 40 C.F.R. Part 61 Subpart L also apply to benzene storage tanks, BTX storage tanks, light-oil storage tanks, and excess ammonia-liquor storage tanks at furnace coke by-product recovery plants. **[45CSR15, 40 C.F.R. § 61.130 (b)]**

8.1.30. Each owner or operator of a furnace coke byproduct recovery plant shall enclose and seal all openings on each process vessel, tar storage tank, and tar-intercepting sump.
**[45CSR15, 40 C.F.R. § 61.132 (a)(1)]**

8.1.31. The owner or operator shall duct gases from each process vessel, tar storage tank, and tar-intercepting sump to the gas collection system, gas distribution system, or other enclosed point in the by-product recovery process where the benzene in the gas will be recovered or destroyed. This control system shall be designed and operated for no detectable emissions, as indicated by an instrument reading of less than 500 ppm above background and visual inspections, as determined by the methods specified in Section 8.3.5. [40 C.F.R. § 61.245(c)] [40 C.F.R. Part 61 Subpart V]. This system can be designed as a closed, positive pressure, gas blanketing system.

(i) Except, the owner or operator may elect to install, operate, and maintain a pressure relief device, vacuum relief device, an access hatch, and a sampling port on each process vessel, tar storage tank, and tar-intercepting sump. Each access hatch and sampling port must be equipped with a gasket and a cover, seal, or lid that must be kept in a closed position at all times, unless in actual use.

(ii) The owner or operator may elect to leave open to the atmosphere the portion of the liquid surface in each tar decanter necessary to permit operation of a sludge conveyor. If the owner or operator elects to maintain an opening on part of the liquid surface of the tar decanter, the owner or operator shall install, operate, and maintain a water leg seal on the tar decanter roof near the sludge discharge chute to ensure enclosure of the major portion of liquid surface not necessary for the operation of the sludge conveyor.
**[45CSR15, 40 C.F.R. § 61.132 (a)(2)]**

8.1.32. Following the installation of any additional control equipment used to meet the requirements of Section 8.1.30. and 8.1.31. [40 C.F.R. § 61.132 (a)], the owner or operator shall monitor the connections and seals on each control system to determine if it is operating with no detectable emissions, using Method 21 (40 CFR part 60, appendix A) and procedures specified in Section 8.3.5. [40 C.F.R. § 61.245(c)] [40 C.F.R. Part 61 Subpart V], and shall visually inspect each source (including sealing materials) and the ductwork of the control system for evidence of visible defects such as gaps or tears. This monitoring and inspection shall be conducted on a semiannual basis and at any other time after the control system is repressurized with blanketing gas following removal of the cover or opening of the access hatch.

(1) If an instrument reading indicates an organic chemical concentration more than 500 ppm above a background concentration, as measured by Method 21 (40 CFR part 60, appendix A), a leak is detected.

(2) If visible defects such as gaps in sealing materials are observed during a visual inspection, a leak is detected.

(3) When a leak is detected, it shall be repaired as soon as practicable, but not later than 15 calendar days after it is detected.

(4) A first attempt at repair of any leak or visible defect shall be made no later than 5 calendar days after each leak is detected.
**[45CSR15, 40 C.F.R. § 61.132 (b)]**

8.1.33. The owner or operator shall conduct a maintenance inspection of the control system used to meet the requirements of Section 8.1.30. and 8.1.31. [40 C.F.R. § 61.132 (a)] on an annual basis for evidence of system abnormalities, such as blocked or plugged lines, sticking valves, plugged condensate traps, and other maintenance defects that could result in abnormal system operation. The owner or operator shall make a first attempt at repair within 5 days, with repair within 15 days of detection.
**[45CSR15, 40 C.F.R. § 61.132 (c)]**

8.1.34. Each owner or operator of a furnace coke by-product recovery plant also shall comply with the requirements of Section 8.1.30. - 8.1.33. [40 C.F.R. §§ 61.132 (a) -(c)] for each benzene storage tank, BTX storage tank, light-oil storage tank, and excess ammonia-liquor storage tank. **[45CSR15, 40 C.F.R. § 61.132 (d)]**

8.1.35. Each owner or operator of a light-oil sump shall enclose and seal the liquid surface in the sump to form a closed system to contain the emissions.

(1) Except, the owner or operator may elect to install, operate, and maintain a vent on the light-oil sump cover. Each vent pipe must be equipped with a water leg seal, a pressure relief device, or vacuum relief device.

(2) Except, the owner or operator may elect to install, operate, and maintain an access hatch on each light-oil sump cover. Each access hatch must be equipped with a gasket and a cover, seal, or lid that must be kept in a closed position at all times, unless in actual use.

(3) The light-oil sump cover may be removed for periodic maintenance but must be replaced (with seal) at completion of the maintenance operation.
**[45CSR15, 40 C.F.R. § 61.133 (a)]**

8.1.36. The venting of steam or other gases from the by-product process to the light-oil sump is not permitted. **[45CSR15, 40 C.F.R. § 61.133 (b)]**

8.1.37. Following the installation of any control equipment used to meet the requirements of Section 8.1.35. [40 C.F.R. § 61.133 (a)], the owner or operator shall monitor the connections and seals on each control system to determine if it is operating with no detectable emissions, using Method 21 (40 CFR part 60, appendix A) and the procedures specified in Section 8.3.5. [40 C.F.R. § 61.245(c)] [40 C.F.R. Part 61 Subpart V], and shall visually inspect each source (including sealing materials) for evidence of visible defects such as gaps or tears. This monitoring and inspection shall be conducted semiannually and at any other time the cover is removed.

(1) If an instrument reading indicates an organic chemical concentration more than 500 ppm above a background concentration, as measured by Method 21 (40 CFR part 60, appendix A), a leak is detected.

(2) If visible defects such as gaps in sealing materials are observed during a visual inspection, a leak is detected.

(3) When a leak is detected, it shall be repaired as soon as practicable, but not later than 15 calendar days after it is detected.

(4) A first attempt at repair of any leak or visible defect shall be made no later than 5 calendar days after each leak is detected.
**[45CSR15, 40 C.F.R. § 61.133 (c)]**

8.1.38. No ("zero") emissions are allowed from naphthalene processing, final coolers and final-cooler cooling towers at coke by-product recovery plants.
**[45CSR15, 40 C.F.R. § 61.134 (a)]**

8.1.39. Each owner or operator of equipment in benzene service shall comply with the requirements of 40 CFR part 61, subpart V, except as provided in Sections 8.1.39. – 8.1.46. [40 C.F.R. § 61.135.]. **[45CSR15, 40 C.F.R. § 61.135 (a)]**

8.1.40. The provisions of Sections 8.1.61. – 8.1.68. [40 C.F.R. § 61.242-3] and 40 C.F.R. § 61.242-9 of subpart V do not apply to 40 C.F.R. Part 61 Subpart L.
**[45CSR15, 40 C.F.R. § 61.135 (b)]**

8.1.41. Each piece of equipment in benzene service to which 40 C.F.R. Part 61 Subpart L applies shall be marked in such a manner that it can be distinguished readily from other pieces of equipment in benzene service.
**[45CSR15, 40 C.F.R. § 61.135 (c)]**

8.1.42. Each exhauster shall be monitored quarterly to detect leaks by the methods specified in Section 8.3.4. [40 C.F.R. § 61.245(b)] except as provided in Sections 8.2.3. and Sections 8.1.43-8.1.45. [40 C.F.R. §61.136(d) and 40 C.F.R. §§ 61.135 (e)-(g)].

(1) If an instrument reading of 10,000 ppm or greater is measured, a leak is detected.

(2) When a leak is detected, it shall be repaired as soon as practicable, but no later than 15 calendar days after it is detected, except as provided in Section 8.1.93. and 8.1.94. [40 C.F.R. § 61.242-10 (a) and (b)]. A first attempt at repair shall be made no later than 5 calendar days after each leak is detected.
**[45CSR15, 40 C.F.R. § 61.135 (d)]**

8.1.43. Each exhauster equipped with a seal system that includes a barrier fluid system and that prevents leakage of process fluids to the atmosphere is exempt from the requirements of Section 8.1.42. [40 C.F.R. § 61.135 (d)] provided the following requirements are met:

(1) Each exhauster seal system is:

(i) Operated with the barrier fluid at a pressure that is greater than the exhauster stuffing box pressure; or

(ii) Equipped with a barrier fluid system that is connected by a closed vent system to a control device that complies with the requirements of Section 8.1.98. – 8.1.106. [40 C.F.R. § 61.242-11]; or

(iii) Equipped with a system that purges the barrier fluid into a process stream with zero benzene emissions to the atmosphere.

(2) The barrier fluid is not in benzene service.

(3) Each barrier fluid system shall be equipped with a sensor that will detect failure of the seal system, barrier fluid system, or both.

(4) (i) Each sensor as described in Section 8.1.43 (3) [40 C.F.R. § 61.135 (e)(3)] shall be checked daily or shall be equipped with an audible alarm.

(ii) The owner or operator shall determine, based on design considerations and operating experience, a criterion that indicates failure of the seal system, the barrier fluid system, or both.

(5) If the sensor indicates failure of the seal system, the barrier system, or both (based on the criterion determined under Section 8.1.43. (4)(ii) [40 C.F.R. § 61.135 (e)(4)(ii)], a leak is detected.

(6) (i) When a leak is detected, it shall be repaired as soon as practicable, but not later than 15 calendar days after it is detected, except as provided in Section 8.1.93. – 8.1.97. [40 C.F.R. §61.242-10].

(ii) A first attempt at repair shall be made no later than 5 calendar days after each leak is detected.

**[45CSR15, 40 C.F.R. § 61.135 (e)]**

8.1.44. An exhauster is exempt from the requirements of Section 8.1.42. [40 C.F.R. § 61.135 (d)] if it is equipped with a closed vent system capable of capturing and transporting any leakage from the seal or seals to a control device that complies with the requirements of Section 8.1.98. – 8.1.106. [40 C.F.R. § 61.242-11] except as provided in Section 8.1.45. [40 C.F.R. § 61.135 (g)]. **[45CSR15, 40 C.F.R. § 61.135 (f)]**

8.1.45. Any exhauster that is designated, as described in Section 8.4.8. [40 C.F.R. § 61.246(e)] for no detectable emissions, as indicated by an instrument reading of less than 500 ppm above background, is exempt from the requirements of Section 8.1.42. [40 C.F.R. § 61.135 (d)] if the exhauster:

(1) Is demonstrated to be operating with no detectable emissions, as indicated by an instrument reading of less than 500 ppm above background, as measured by the methods specified in Section 8.3.5. [40 C.F.R. §61.245(c)]; and

(2) Is tested for compliance with Section 8.1.45. (1) [40 C.F.R. § 61.135 (g)(1)] initially upon designation, annually, and at other times requested by the Administrator.
**[45CSR15, 40 C.F.R. § 61.135 (g)]**

8.1.46 Any exhauster that is in vacuum service is excluded from the requirements of 40 C.F.R. Part 61 Subpart L if it is identified as required in Section 8.4.8. (5) [40 C.F.R. § 61.246(e)(5)]. **[45CSR15, 40 C.F.R. § 61.135 (h)]**

8.1.47. The provisions of 40 C.F.R. Part 61 Subpart V apply to each of the following sources that are intended to operate in volatile hazardous air pollutant (VHAP) service: pumps, compressors, pressure relief devices, sampling connection systems, open-ended valves or lines, valves, connectors, surge control vessels, bottoms receivers, and control devices or systems required by 40 C.F.R. Part 61 Subpart V.
**[45CSR15, 40 C.F.R. § 61.240 (a), 40 C.F.R. Part 61 Subpart V]**

8.1.48. The provisions of 40 C.F.R. Part 61 Subpart V apply to the sources listed in Section 8.1.47. [40 C.F.R. §61.240 (a)] after the date of promulgation of a specific subpart in part 61. **[45CSR15, 40 C.F.R. § 61.240 (b), 40 C.F.R. Part 61 Subpart V]**

8.1.49. Each owner or operator subject to the provisions of 40 C.F.R. Part 61 subpart V shall demonstrate compliance with the requirements of Section 8.1.49. - 8.1.106. [40 C.F.R. §§61.242-1 to 61.242-11] for each new and existing source as required in 40 CFR 61.05, except as provided in 40 C.F.R. §§61.243 and 61.244.
**[45CSR15, 40 C.F.R. § 61.242-1 (a)]**

8.1.50. Compliance with 40 C.F.R. Part 61 subpart V will be detemined by review of records, review of performance test results, and inspection using the methods and procedures specified in Section 8.3.3. – 8.3.6. [40 C.F.R. §61.245].
**[45CSR15, 40 C.F.R. § 61.242-1 (b)]**

8.1.51. (1) An owner or operator may request a determination of alternative means of emission limitation to the requirements of Sections 8.1.54. – 8.1.68. [40 C.F.R. §§61.242-2 and 61.242-3], Sections 8.1.73. – 8.1.92. [40 C.F.R. §§61.242-5, 61.242-6, 61.242-7, 61.242-8] and 40 C.F.R. § 61.242-9, and Sections 8.1.98. – 8.1.106. [40 C.F.R. §61.242-11] as provided in 40 C.F.R. §61.244.

(2) If the Administrator makes a determination that a means of emission limitation is at least a permissible alternative to the requirements of Sections 8.1.54. – 8.1.68. [40 C.F.R. §§61.242-2, 61.242-3], Sections 8.1.73. – 8.1.92. [40 C.F.R. §§61.242-5, 61.242-6, 61.242-7, 61.242-8] and 40 C.F.R. § 61.242-9, and Sections 8.1.98. – 8.1.106. [40 C.F.R. §61.242-11], an owner or operator shall comply with the requirements of that determination.
**[45CSR15, 40 C.F.R. § 61.242-1 (c)]**

8.1.52. Each piece of equipment to which 40 C.F.R. Part 61 subpart V applies shall be marked in such a manner that it can be distinguished readily from other pieces of equipment.
**[45CSR15, 40 C.F.R. § 61.242-1 (d)]**

8.1.53. Equipment that is in vacuum service is excluded from the requirements of Section 8.1.54. to 8.1.106. [40 C.F.R. §61.242-2, to §61.242-11] if it is identified as required in Section 8.4.8. (5) [40 C.F.R. §61.246(e)(5)].
**[45CSR15, 40 C.F.R. § 61.242-1 (e)]**

8.1.54. (1) Each pump shall be monitored monthly to detect leaks by the methods specified in Section 8.3.4. [40 C.F.R. §61.245(b)], except as provided in Section 8.1.51. and Sections 8.1.57. – 8.1.59. [40 C.F.R. §61.242-1(c) and 40 C.F.R. § 63.242-2 (d), (e), and (g)].

(2) Each pump shall be checked by visual inspection each calendar week for indications of liquids dripping from the pump seal.

**[45CSR15, 40 C.F.R. § 61.242-2 (a)]**

8.1.55. (1) If an instrument reading of 10,000 ppm or greater is measured, a leak is detected.

(2) If there are indications of liquids dripping from the pump seal, a leak is detected.

**[45CSR15, 40 C.F.R. § 61.242-2 (b)]**

8.1.56. (1) When a leak is detected, it shall be repaired as soon as practicable, but not later than 15 calendar days after it is detected, except as provided in Sections 8.1.93. – 8.1.97. [40 C.F.R. §61.242-10].

(2) A first attempt at repair shall be made no later than 5 calendar days after each leak is detected.

**[45CSR15, 40 C.F.R. § 61.242-2 (c)]**

8.1.57. Each pump equipped with a dual mechanical seal system that includes a barrier fluid system is exempt from the requirements of Section 8.1.54. and 8.1.55. [40 C.F.R. §61.242-2 (a) and (b)], provided the following requirements are met:

(1) Each dual mechanical seal system is:

(i) Operated with the barrier fluid at a pressure that is at all times greater than the pump stuffing box pressure; or

(ii) Equipped with a barrier fluid degassing reservoir that is routed to a process or fuel gas system or connected by a closed-vent system to a control device that complies with the requirements of Section 8.1.98. –

8.1.106. [40 C.F.R. §61.242-11]; or

(iii) Equipped with a system that purges the barrier fluid into a process stream with zero VHAP emissions to atmosphere.

(2) The barrier fluid is not in VHAP service and, if the pump is covered by standards under 40 CFR part 60, is not in VOC service.

(3) Each barrier fluid system is equipped with a sensor that will detect failure of the seal system, the barrier fluid system, or both.

(4) Each pump is checked by visual inspection each calendar week for indications of liquids dripping from the pump seal.

(i) If there are indications of liquid dripping from the pump seal at the time of the weekly inspection, the pump shall be monitored as specified in Section 8.3.3. – 8.3.6. [40 C.F.R. §61.245] to determine the presence of VOC and VHAP in the barrier fluid.

(ii) If the monitor reading (taking into account any background readings) indicates the presence of VHAP, a leak is detected. For the purpose of this paragraph, the monitor may be calibrated with VHAP, or may employ a gas chromatography column to limit the response of the monitor to VHAP, at the option of the owner or operator.

(iii) If an instrument reading of 10,000 ppm or greater (total VOC) is measured, a leak is detected.

(5) Each sensor as described in Section 8.1.57. (3) [40 C.F.R. § 61.242-2 (d)(3)] is checked daily or is equipped with an audible alarm.

(6) (i) The owner or operator determines, based on design considerations and operating experience, criteria applicable to the presence and frequency of drips and to the sensor that indicates failure of the seal system, the barrier fluid system, or both.

(ii) If indications of liquids dripping from the pump seal exceed the criteria established in Section 8.1.57. (6)(i) [40 C.F.R. §61.242-2 (d)(6)(i)], or if, based on the criteria established in Section 8.1.57. (6)(i) [40 C.F.R. §61.242-2 (d)(6)(i)], the sensor indicates failure of the seal system, the barrier fluid system, or both, a leak is detected.

(iii) When a leak is detected, it shall be repaired as soon as practicable, but no later than 15 calendar days after it is detected, except as provided in Section 8.1.93. – 8.1.97. [40 C.F.R. §61.242-10].

(iv) A first attempt at repair shall be made no later than five calendar days after each leak is detected.

**[45CSR15, 40 C.F.R. § 61.242-2 (d)]**

8.1.58. Any pump that is designated, as described in Section 8.4.8. (2) [40 C.F.R. §61.246 (e)(2)], for no detectable emissions, as indicated by an instrument reading of less than 500 ppm above background, is exempt from the requirements of Section 8.1.54., 8.1.56., and 8.1.57. [40 C.F.R. § 61.242-2 (a), (c), and (d)] if the pump:

(1) Has no externally actuated shaft penetrating the pump housing,

(2) Is demonstrated to be operating with no detectable emissions, as indicated by an instrument reading of less than 500 ppm above background, as measured by the method specified in Section 8.3.5. [40 C.F.R. §61.245(c)], and

(3) Is tested for compliance with Section 8.1.58. (2) [40 C.F.R. § 61.242-2 (e)(2)] initially upon designation, annually, and at other times requested by the Administrator.

**[45CSR15, 40 C.F.R. § 61.242-2 (e)]**

8.1.59. Any pump that is designated, as described in Section 8.4.9. (1) [40 C.F.R. §61.246(f)(1)], as an unsafe-to-monitor pump is exempt from the monitoring and inspection requirements of Section 8.1.54. and Section 8.1.57. (4) through (6) [40 C.F.R. § 61.242-2 (a) and 40 C.F.R. §61.242-2 (d)(4) through (6)] if:

(1) The owner or operator of the pump demonstrates that the pump is unsafe-to-monitor because monitoring personnel would be exposed to an immediate danger as a consequence of complying with section 8.1.54. [40 C.F.R. § 61.242-2 (a)]; and

(2) The owner or operator of the pump has a written plan that requires monitoring of the pump as frequently as practicable during safe-to-monitor times but not more frequently than the periodic monitoring schedule otherwise applicable, and repair of the equipment according to the procedures in 8.1.56. [40 C.F.R. § 61.242-2 (c)]; if a leak is detected.

**[45CSR15, 40 C.F.R. § 61.242-2 (g)]**

8.1.60. Any pump that is located within the boundary of an unmanned plant site is exempt from the weekly visual inspection requirement of Sections 8.1.54. (2) and 8.1.57. (4) [40 C.F.R. §§61.242-2 (a)(2) and (d)(4)] of this section, and the daily requirements of Section 8.1.57. (5) [40 C.F.R. §§61.242-2 (d)(5)], provided that each pump is visually inspected as often as practicable and at least monthly.
**[45CSR15, 40 C.F.R. § 61.242-2 (h)]**

8.1.61. Each compressor shall be equipped with a seal system that includes a barrier fluid system and that prevents leakage of process fluid to atmosphere, except as provided in Section 8.1.51., 8.1.68. [40 C.F.R. §61.242-1(c), §61.242-3 (i)] and §61.242-3 (h).
**[45CSR15, 40 C.F.R. § 61.242-3 (a)]**

8.1.62. Each compressor seal system as required in Section 8.1.61. [40 C.F.R. §61.242-3 (a)] shall be:

(1) Operated with the barrier fluid at a pressure that is greater than the compressor stuffing box pressure; or

(2) Equipped with a barrier fluid system degassing reservoir that is routed to a process or fuel gas system or connected by a closed-vent system to a control device that complies with the requirements of Section 8.1.98. – 8.1.106. [40 C.F.R. §61.242-11]; or

(3) Equipped with a system that purges the barrier fluid into a process stream with zero VHAP emissions to atmosphere.

**[45CSR15, 40 C.F.R. § 61.242-3 (b)]**

8.1.63. The barrier fluid shall not be in VHAP service and, if the compressor is covered by standards under 40 CFR Part 60, shall not be in VOC service.
**[45CSR15, 40 C.F.R. § 61.242-3 (c)]**

8.1.64. Each barrier fluid system as described in Section 8.1.61. – 8.1.63. [40 C.F.R. §61.242-3 (a)-(c)] shall be equipped with a sensor that will detect failure of the seal system, barrier fluid system, or both.
**[45CSR15, 40 C.F.R. § 61.242-3 (d)]**

8.1.65. (1) Each sensor as required in Section 8.1.64. [40 C.F.R. §61.242-3 (d)] shall be checked daily or shall be equipped with an audible alarm unless the compressor is located within the boundary of an unmanned plant site.

(2) The owner or operator shall determine, based on design considerations and operating experience, a criterion that indicates failure of the seal system, the barrier fluid system, or both.

**[45CSR15, 40 C.F.R. § 61.242-3 (e)]**

8.1.66. If the sensor indicates failure of the seal system, the barrier fluid system, or both based on the criterion determined under Section 8.1.65. (2) [40 C.F.R. §61.242-3 (e)(2)] , a leak is detected. **[45CSR15, 40 C.F.R. § 61.242-3 (f)]**

8.1.67. (1) When a leak is detected, it shall be repaired as soon as practicable, but not later than 15 calendar days after it is detected, except as provided in Section 8.1.93. – 8.1.97. [40 C.F.R. §61.242-10].

(2) A first attempt at repair shall be made no later than 5 calendar days after eack leak is detected.

**[45CSR15, 40 C.F.R. § 61.242-3 (g)]**

8.1.68. Any Compressor that is designated, as described in Section 8.4.8. (2) [40 C.F.R § 61.246(e)(2)], for no detectable emission as indicated by an instrument reading of less than 500 ppm above background is exempt from the requirements of Section 8.1.61. – 8.1.67. [40 C.F.R. §61.242-3 (a)-(g)] if the compressor:

(1) Is demonstrated to be operating with no detectable emissions, as indicated by an instrument reading of less than 500 ppm above background, as measured by the method specified in Section 8.3.5. [40 C.F.R. §61.245(c)]; and

(2) Is tested for compliance with Section 8.1.68. (1) [40 C.F.R. § 61.242-3 (i)(1)] initially upon designation, annually, and at other times requested by the Administrator.

**[45CSR15, 40 C.F.R. § 61.242-3 (i)]**

8.1.69 Except during pressure releases, each pressure relief device in gas/vapor service shall be operated with no detectable emissions, as indicated by an instrument reading of less than 500 ppm above background, as measured by the method specified in Section 8.3.5. [40 C.F.R. §61.245(c)].
**[45CSR15, 40 C.F.R. § 61.242-4 (a)]**

8.1.70. (1) After each pressure release, the pressure relief device shall be returned to a condition of no detectable emissions, as indicated by an instrument reading of less than 500 ppm above background, as soon as practicable, but no later than 5 calendar days after each pressure release, except as provided in Section 8.1.93. – 8.1.97. [40 C.F.R. §61.242-10].

(2) No later than 5 calendar days after the pressure release, the pressure relief device shall be monitored to confirm the condition of no detectable emissions, as indicated by an instrument reading of less than 500 ppm above background, as measured by the method specified in 8.3.5. [40 C.F.R. §61.245(c)].

**[45CSR15, 40 C.F.R. § 61.242-4 (b)]**

8.1.71. Any pressure relief device that is routed to a process or fuel gas system or equipped with a closed-vent system capable of capturing and transporting leakage from the pressure relief device to a control device as described in Section 8.1.98. - 8.1.106. [40 C.F.R. §61.242-11] is exempt from the requirements of Section 8.1.69. and 8.1.70. [40 C.F.R. § 61.242-4 (a) and (b)].
**[45CSR15, 40 C.F.R. § 61.242-4 (c)]**

8.1.72. (1) Any pressure relief device that is equipped with a rupture disk upstream of the pressure relief device is exempt from the requirements of Section 8.1.69. and 8.1.70. [40 C.F.R. § 61.242-4 (a) and (b)], provided the owner or operator complies with the requirements in Section 8.1.72. (2) [40 C.F.R. § 61.242-4 (d)(2)].

(2) After each pressure release, a new rupture disk shall be installed upstream of the pressure relief device as soon as practicable, but no later than 5 calendar days after each pressure release, except as provided in Section 8.1.93. – 8.1.97. [40 C.F.R §61.242-10].

**[45CSR15, 40 C.F.R. § 61.242-4 (d)]**

8.1.73. Each sampling connection system shall be equipped with a closed-purge, closed-loop, or closed vent system, except as provided in Section 8.1.51. [40 C.F.R. §61.242-1(c)]. Gases displaced during filling of the sample container are not required to be collected or captured.
**[45CSR15, 40 C.F.R. § 61.242-5 (a)]**

8.1.74. Each closed-purge, closed-loop, or closed vent system as required in Section 8.1.73. [40 C.F.R. § 61.242-5 (a)] shall comply with the requirements specified in Sections 8.1.74. (1) through (4) [40 C.F.R. §61.242-5 (b)(1) through (4)]:

(1) Return the purged process fluid directly to the process line; or

(2) Collect and recycle the purged process fluid; or

(3) Be designed and operated to capture and transport all the purged process fluid to a control device that complies with the requirements of Section 8.1.98. – 8.1.106. [40 C.F.R. §61.242-11]; or

(4) Collect, store, and transport the purged process fluid to any of the following systems or facilities:

(i) A waste management unit as defined in 40 C.F.R. §63.111 if the waste management unit is subject to and operated in compliance with the

provisions of 40 CFR part 63, subpart G, applicable to Group 1 wastewater streams; or

(i) A treatment, storage, or disposal facility subject to regulation under 40 C.F.R. part 262, 264, 265, or 266; or

(iii) A facility permitted, licensed, or registered by a State to manage municipal or industrial solid waste, if the process fluids are not hazardous waste as defined in 40 C.F.R. part 261.

**[45CSR15, 40 C.F.R. § 61.242-5 (b)]**

8.1.75. In-situ sampling systems and sampling systems without purges are exempt from the requirements of Section 8.1.73 and 8.1.74. [40 C.F.R. §§61.242-5 (a) and (b)].
**[45CSR15, 40 C.F.R. § 61.242-5 (c)]**

8.1.76. (1) Each open-ended valve or line shall be equipped with a cap, blind flange, plug, or a second valve, except as provided in Section 8.1.51. [40 C.F.R. §61.242-1(c)].

(2) The cap, blind flange, plug, or second valve shall seal the open end at all times except during operations requiring process fluid flow through the open-ended valve or line.

**[45CSR15, 40 C.F.R. § 61.242-6 (a)]**

8.1.77. Each open-ended valve or line equipped with a second valve shall be operated in a manner such that the valve on the process fluid end is closed before the second valve is closed.
**[45CSR15, 40 C.F.R. § 61.242-6 (b)]**

8.1.78. When a double block and bleed system is being used, the bleed valve or line may remain open during operations that require venting the line between the block valves but shall comply with Section 8.1.76. [40 C.F.R. §61.242-6(a)] at all other times.
**[45CSR15, 40 C.F.R. § 61.242-6 (c)]**

8.1.79. Open-ended valves or lines in an emergency shutdown system which are designed to open automatically in the event of a process upset are exempt from the requirements of Sections 8.1.76., 8.1.77., and 8.1.78. [40 C.F.R. §§61.242-6 (a), (b) and (c)].
**[45CSR15, 40 C.F.R. § 61.242-6 (d)]**

8.1.80. Open-ended valves or lines containing materials which would autocatalytically polymerize or would present an explosion, serious overpressure, or other safety hazard if capped or equipped with a double block and bleed system as specified in Sections 8.1.76., 8.1.77., and 8.1.78. [40 C.F.R. §§61.242-6 (a), (b) and (c)] are exempt from the requirements of Sections 8.1.76., 8.1.77., and 8.1.78. [40 C.F.R. §§61.242-6 (a), (b) and (c)].
**[45CSR15, 40 C.F.R. § 61.242-6 (e)]**

8.1.81. Each valve shall be monitored monthly to detect leaks by the method specified in Section 8.1.74. [40 C.F.R. §61.245(b)] and shall comply with Section 8.1.82. – 8.1.85. [40 C.F.R. §61.242-7 (b)-(e)], except as provided in Section 8.1.86., 8.1.87., and 8.1.88. [40 C.F.R. §61.242-7 (f), (g) and (h)], 40 C.F.R. §61.243-1 or Section 8.1.51. [40 C.F.R. §61.242-

1(c)] and 40 C.F.R. §61.243-2.
**[45CSR15, 40 C.F.R. § 61.242-7 (a)]**

8.1.82. If an instrument reading of 10,000 ppm or greater is measured, a leak is detected.
**[45CSR15, 40 C.F.R. § 61.242-7 (b)]**

8.1.83. (1) Any valve for which a leak is not detected for 2 successive months may be monitored the first month of every quarter, beginning with the next quarter, until a leak is detected.

(2) If a leak is detected, the valve shall be monitored monthly until a leak is not detected for 2 successive months.

**[45CSR15, 40 C.F.R. § 61.242-7 (c)]**

8.1.84 (1) When a leak is detected, it shall be repaired as soon as practicable, but no later than 15 calendar days after the leak is detected, except as provided in Section 8.1.93. – 8.1.97. [40 C.F.R. §61.242-10].

(2) A first attempt at repair shall be made no later than 5 calendar days after each leak is detected.

**[45CSR15, 40 C.F.R. § 61.242-7 (d)]**

8.1.85. First attempts at repair include, but are not limited to, the following best practices where practicable:

(1) Tightening of bonnet bolts;

(2) Replacement of bonnet bolts;

(3) Tightening of packing gland nuts; and

(4) Injection of lubricant into lubricated packing.

**[45CSR15, 40 C.F.R. § 61.242-7 (e)]**

8.1.86. Any valve that is designated, as described in Section 8.4.8. (2) [40 C.F.R. § 61.246(e)(2)], for no detectable emissions, as indicated by an instrument reading of less than 500 ppm above background, is exempt from the requirements of Section 8.1.81. [40 C.F.R. § 61.242-7 (a)] if the valve:

(1) Has no external actuating mechanism in contact with the process fluid;

(2) Is operated with emissions less than 500 ppm above background, as measured by the method specified in Section 8.3.5. [40 C.F.R. § 61.245(c)]; and

(3) Is tested for compliance with Section 8.1.86. (2) [40 C.F.R. § 61.242-7 (f)(2)] initially upon designation, annually, and at other times requested by the Administrator.

**[45CSR15, 40 C.F.R. § 61.242-7 (f)]**

8.1.87. Any valve that is designated, as described in Section 8.4.9. (1) [40 C.F.R. § 61.246 (f) (1)], as an unsafe-to-monitor valve is exempt from the requirements of Section 8.1.81. [40 C.F.R. § 61.242-7 (a)] if:

(1) The owner or operator of the valve demonstrates that the valve is unsafe to monitor because monitoring personnel would be exposed to an immediate danger as a consequence of complying with Section 8.1.81. [40 C.F.R. § 61.242-7 (a)]; and

(2) The owner or operator of the valve has a written plan that requires monitoring of the valve as frequent as practicable during safe-to-monitor times.

**[45CSR15, 40 C.F.R. § 61.242-7 (g)]**

8.1.88. Any valve that is designated, as described in Section 8.4.9. (2) [40 C.F.R. § 61.246(f)(2)], as a difficult-to-monitor valve is exempt from the requirements of Section 8.1.81. [40 C.F.R. § 61.242-7 (a)] if:

(1) The owner or operator of the valve demonstrates that the valve cannot be monitored without elevating the monitoring personnel more than 2 meters above a support surface;

(2) The process unit within which the valve is located is an existing process unit; and

(3) The owner or operator of the valve follows a written plan that requires monitoring of the valve at least once per calendar year.

**[45CSR15, 40 C.F.R. § 61.242-7 (h)]**

8.1.89. If evidence of a potential leak is found by visual, audible, olfactory, or any other detection method at pressure relief devices in liquid service and connectors, the owner or operator shall follow either one of the following procedures, except as provided in Section 8.1.51. [40 C.F.R. §61.242-1(c)]:

(1) The owner or operator shall monitor the equipment within 5 days by the method specified in Section 8.3.4. [40 C.F.R. § 61.245 (b)] and shall comply with the requirements of Section 8.1.90. through 8.1.92. [40 C.F.R. § 61.242-8 (b) through (d)].

(2) The owner or operator shall eliminate the visual, audible, olfactory, or other indication of a potential leak.

**[45CSR15, 40 C.F.R. § 61.242-8 (a)]**

8.1.90. If an instrument reading of 10,000 ppm or greater is measured, a leak is detected.
**[45CSR15, 40 C.F.R. § 61.242-8 (b)]**

8.1.91. (1) When a leak is detected, it shall be repaired as soon as practicable, but not later than 15 calendar days after it is detected, except as provided in Section 8.1.93. – 8.1.97. [40 C.F.R. §61.242-10].

(2) The first attempt at repair shall be made no later than 5 calendar days after each leak is detected.

**[45CSR15, 40 C.F.R. § 61.242-8 (c)]**

8.1.92. First attempts at repair include, but are not limited to, the best practices described under Section 8.1.85. [40 C.F.R. §61.242-7 (e)].

**[45CSR15, 40 C.F.R. § 61.242-8 (d)]**

8.1.93. Delay of repair of equipment for which leaks have been detected will be allowed if repair within 15 days is technically infeasible without a process unit shutdown. Repair of this equipment shall occur before the end of the next process unit shutdown.
**[45CSR15, 40 C.F.R. § 61.242-10 (a)]**

8.1.94. Delay of repair of equipment for which leaks have been detected will be allowed for equipment that is isolated from the process and that does not remain in VHAP service.
**[45CSR15, 40 C.F.R. § 61.242-10 (b)]**

8.1.95. Delay of repair for valves will be allowed if:

(1) The owner or operator demonstrates that emissions of purged material resulting from immediate repair are greater than the fugitive emissions likely to result from delay of repair, and

(2) When repair procedures are effected, the purged material is collected and destroyed or recovered in a control device complying with Section 8.1.98. – 8.1.106. [40 C.F.R. §61.242-11].

**[45CSR15, 40 C.F.R. § 61.242-10 (c)]**

8.1.96. Delay of repair for pumps will be allowed if:

(1) Repair requires the use of a dual mechanical seal system that includes a barrier fluid system, and

(2) Repair is completed as soon as practicable, but not later than 6 months after the leak was detected.

**[45CSR15, 40 C.F.R. § 61.242-10 (d)]**

8.1.97. Delay of repair beyond a process unit shutdown will be allowed for a valve if valve assembly replacement is necessary during the process unit shutdown, valve assembly supplies have been depleted, and valve assembly

supplies had been sufficiently stocked before the supplies were depleted. Delay of repair beyond the next process unit shutdown will not be allowed unless the next process unit shutdown occurs sooner than 6 months after the first process unit shutdown.
**[45CSR15, 40 C.F.R. § 61.242-10 (e)]**

8.1.98. Owners or operators of closed-vent systems and control devices used to comply with provisions of 40 C.F.R. Part 61 Subpart V shall comply with the provisions of Sections 8.1.98. – 8.1.106. [40 C.F.R. § 61.242-11], except as provided in Section 8.1.51. [40 C.F.R. § 61.242-1(c)].
**[45CSR15, 40 C.F.R. § 61.242-11 (a)]**

8.1.99. Except as provided in Section 8.1.102 through 8.1.104 [40 C.F.R. §§ 61.242-11 (i) through (k)], each closed vent system shall be inspected according to the procedures and schedule specified in Section 8.1.99. (1) [40 C.F.R. § 61.242-11 (f)(1)] or 40 C.F.R. § 61.242-11 (f) (2), as applicable.

(1) If the vapor collection system or closed vent system is constructed of hard-piping, the owner or operator shall comply with the following requirements:

(i) Conduct an initial inspection according to the procedures in Section 8.3.4. [40 C.F.R. §61.245(b)]; and

(ii) Conduct annual visual inspections for visible, audible, or olfactory indications of leaks.

**[45CSR15, 40 C.F.R. § 61.242-11 (f)]**

8.1.100. Leaks, as indicated by an instrument reading greater than 500 parts per million by volume above background or by visual inspections, shall be repaired as soon as practicable except as provided in Section 8.1.101. [40 C.F.R. § 61.242-11 (h)].

(1) A first attempt at repair shall be made no later than 5 calendar days after the leak is detected.

(2) Repair shall be completed no later than 15 calendar days after the leak is detected.

**[45CSR15, 40 C.F.R. § 61.242-11 (g)]**

8.1.101. Delay of repair of a closed vent system for which leaks have been detected is allowed if the repair is technically infeasible without a process unit shutdown, or if the owner or operator determines that emissions resulting from immediate repair would be greater than the fugitive emissions likely to result from delay of repair. Repair of such equipment shall be complete by the end of the next process unit shutdown.
**[45CSR15, 40 C.F.R. § 61.242-11 (h)]**

8.1.102. If a vapor collection system or closed vent system is operated under a vacuum, it is exempt from the inspection requirements of Section 8.1.99. (1)(i) [40 C.F.R. § 61.242-11 (f)(1)(i)] and 40 C.F.R. § 61.242-11 (f)(2).
**[45CSR15, 40 C.F.R. § 61.242-11 (i)]**

8.1.103. Any parts of the closed vent system that are designated, as described in Section 8.1.105. (1) [40 C.F.R. §61.242-11 (l)], as unsafe-to-inspect are exempt from the inspection requirements of Section 8.1.99. (1)(i) [40 C.F.R. § 61.242-11 (f)(1)(i)] and 40 C.F.R. § 61.242-11 (f) (2) if they comply with the following requirements:

(1) The owner or operator determines that the equipment is unsafe-to-inspect because inspecting personnel would be exposed to an imminent or potential danger as a consequence of complying with Section 8.1.99. (1)(i) [40 C.F.R. §61.242-11 (f)(1)(i)] or 40 C.F.R. § 61.242-11 (f) (2); and

(2) The owner or operator has a written plan that requires inspection of the equipment as frequently as practicable during safe-to-inspect times.

**[45CSR15, 40 C.F.R. § 61.242-11 (j)]**

8.1.104. Any parts of the closed vent system that are designated, as described in Section 8.1.105. (2) [40 C.F.R. §61.242-11 (l)(2)], as difficult-to-inspect are exempt from the inspection requirements of Section 8.1.99. (1)(i) [40 C.F.R. §61.242-11 (f)(1)(i)] and 40 C.F.R. § 61.242-11 (f) (2) if they comply with the following requirements:

(1) The owner or operator determines that the equipment cannot be inspected without elevating the inspecting personnel more than 2 meters above a support surface; and

(2) The owner or operator has a written plan that requires inspection of the equipment at least once every 5 years. A closed vent system is exempt from inspection if it is operated under a vacuum.

**[45CSR15, 40 C.F.R. § 61.242-11 (k)]**

8.1.105. The owner or operator shall record the following information:

(1) Identification of all parts of the closed vent system that are designated as unsafe-to-inspect, an explanation of why the equipment is unsafe-to-inspect, and the plan for inspecting the equipment.

(2) Identification of all parts of the closed vent system that are designated as difficult-to-inspect, an explanation of why the equipment is difficult-to-inspect, and the plan for inspecting the equipment.

(3) For each inspection during which a leak is detected, a record of the information specified in Section 8.4.6. [40 C.F.R. §61.246(c)].

(4) For each inspection conducted in accordance with Section 8.3.4. [40 C.F.R. §61.245(b)] during which no leaks are detected, a record that the inspection was performed, the date of the inspection, and a statement that no leaks were detected.

(5) For each visual inspection conducted in accordance with Section 8.1.99. (1)(ii) [40 C.F.R. §61.242-11 (f)(1)(ii)] during which no leaks are detected, a record that the inspection was performed, the date of the inspection, and a statement that no leaks were detected.

**[45CSR15, 40 C.F.R. § 61.242-11 (l)]**

8.1.106. Closed vent systems and control devices used to comply with provisions of 40 C.F.R. Part 61 Subpart V shall be operated at all times when emissions may be vented to them.
**[45CSR15, 40 C.F.R. § 61.242-11 (m)]**

8.1.107. The provisions of 40 C.F.R. Part 61 Subpart FF apply to owners and operators of chemical manufacturing plants, coke by-product recovery plants, and petroleum refineries.
**[45CSR15, 40 C.F.R. § 61.340 (a)]**

8.1.108. The provisions of 40 C.F.R. Part 61 Subpart FF apply to owners and operators of hazardous waste treatment, storage, and disposal facilities that treat, store, or dispose of hazardous waste generated by any facility listed in Section 8.1.107. [40 C.F.R. §61.340 (a)]. The waste streams at hazardous waste treatment, storage, and disposal facilities subject to the provisions of 40 C.F.R. Part 61 Subpart FF are the benzene-containing hazardous waste from any facility listed in Section 8.1.107. [40 C.F.R. §61.340 (a)]. A hazardous waste treatment, storage, and disposal facility is a facility that must obtain a hazardous waste management permit under subtitle C of the Solid Waste Disposal Act.
**[45CSR15, 40 C.F.R. § 61.340 (b)]**

8.1.109. An owner or operator of a facility at which the total annual benzene quantity from facility waste is less than 10 megagrams per year (Mg/yr) (11 ton/yr) shall be exempt from the requirements of 40 C.F.R. §61.342 (b) and (c). The total annual benzene quantity from facility waste is the sum of the annual benzene quantity for each waste stream at the facility that has a flow-weighted annual average water content greater than 10 percent or

that is mixed with water, or other wastes, at any time and the mixture has an annual average water content greater than 10 percent. The benzene quantity in a waste stream is to be counted only once without multiple counting if other waste streams are mixed with or generated from the original waste stream. Other specific requirements for calculating the total annual benzene waste quantity are as follows:

(1) Wastes that are exempted from control under 40 C.F.R §§61.342(c)(2) and 61.342(c)(3) are included in the calculation of the total annual benzene quantity if they have an annual average water content greater than 10 percent, or if they are mixed with water or other wastes at any time and the mixture has an annual average water content greater than 10 percent.

(2) The benzene in a material subject to 40 C.F.R. Part 61 Subpart FF that is sold is included in the calculation of the total annual benzene quantity if the material has an annual average water content greater than 10 percent.

(3) Benzene in wastes generated by remediation activities conducted at the facility, such as the excavation of contaminated soil, pumping and treatment of groundwater, and the recovery of product from soil or groundwater, are not included in the calculation of total annual benzene quantity for that facility. If the facility's total annual benzene quantity is 10 Mg/yr (11 ton/yr) or more, wastes generated by remediation activities are subject to the requirements of 40 C.F.R §§61.342 (c) through (h). If the facility is managing remediation waste generated offsite, the benzene in this waste shall be included in the calculation of total annual benzene quantity in facility waste, if the waste streams have an annual average water content greater than 10 percent, or if they are mixed with water or other wastes at any time and the mixture has an annual average water content greater than 10 percent.

(4) The total annual benzene quantity is determined based upon the quantity of benzene in the waste before any waste treatment occurs to remove the benzene except as specified in Section 8.3.9. (1) (i) (A) through (C) [40 CF.R. §61.355 (c) (1) (i) (A) through (C)].

**[45CSR15, 40 C.F.R. § 61.342 (a)]**

8.1.110. Compliance with 40 C.F.R. Part 61 Subpart FF will be determined by review of facility records and results from tests and inspections using methods and procedures specified in Sections 8.3.7. – 8.3.9. [40 C.F.R. §61.355] of 40 C.F.R. Part 61 Subpart FF.
**[45CSR15, 40 C.F.R. § 61.342 (g)]**

8.1.111. Permission to use an alternative means of compliance to meet the requirements of 40 C.F.R. §§61.342 through 61.352 of 40 C.F.R. Part 61 Subpart FF may be granted by the Administrator as provided in 40 C.F.R. §61.353 of 40 C.F.R. Part 61 Subpart FF.
**[45CSR15, 40 C.F.R. § 61.342 (h)]**

## Monitoring Requirements

8.2.1. Each owner or operator subject to the provisions of 40 C.F.R. Part 61 Subpart L shall demonstrate compliance with the requirements of Sections 8.1.30 – 8.1.46. [40 C.F.R. §§61.132 through 61.135] for each new and existing source, except as provided under 40 C.F.R §§61.243-1 and 61.243-2.
**[45CSR15, 40 C.F.R. § 61.136 (a)]**

8.2.2. Compliance with 40 C.F.R. Part 61 Subpart L shall be determined by a review of records, review of performance test results, inspections, or any combination thereof, using the methods and procedures specified in Sections 8.3.1. – 8.3.2. [40 C.F.R. § 61.137.].
**[45CSR15, 40 C.F.R. § 61.136 (b)]**

8.2.3. (1) An owner or operator may request permission to use an alternative means of emission limitation to meet the requirements in Sections 8.1.30. – 8.1.37. and 8.1.39 - 8.1.46. [40 C.F.R. §§61.132, 61.133, and 61.135] of 40 C.F.R. Part 61 Subpart L and Sections 8.1.54. – 8.1.60., 8.1.73. – 8.1.92., and 8.1.98 – 8.1.106. [40 C.F.R. §§61.242-2, -5, -6, -7, -8, and –11] of 40 C.F.R. Part 61 Subpart V. Permission to use an alternative means of emission limitation shall be requested as specified in 40 C.F.R. § 61.12(d).

(2) When the Administrator evaluates requests for permission to use alternative means of emission limitation for sources subject to Sections 8.1.30. – 8.1.37. [40 C.F.R. §§61.132 and 61.133] (except tar decanters) the Administrator shall compare test data for the means of emission limitation to a benzene control efficiency of 98 percent. For tar decanters, the Administrator shall compare test data for the means of emission limitation to a benzene control efficiency of 95 percent.

(3) For any requests for permission to use an alternative to the work practices required under Sections 8.1.39.- 8.1.46. [40 C.F.R. §61.135], the provisions of 40 C.F.R. §61.244(c) shall apply. **[45CSR15, 40 C.F.R. § 61.136 (d)]**

## Testing Requirements

8.3.1. Each owner or operator subject to the provisions of 40 C.F.R. Part 61 Subpart L shall comply with the requirements in Sections 8.3.3. – 8.3.6. [40 C.F.R. § 61.245 of 40 C.F.R. Part 61, Subpart V]. **[45CSR15, 40 C.F.R. § 61.137 (a)]**

8.3.2. To determine whether or not a piece of equipment is in benzene service, the methods in Section 8.3.6. [40 C.F.R. § 61.245(d)] shall be used, except that, for exhausters, the percent benzene shall be 1 percent by weight, rather than the 10 percent by weight described in Section 8.3.6. [40 C.F.R. § 61.245(d)]. **[45CSR15, 40 C.F.R. § 61.137 (b)]**

8.3.3. Each owner or operator subject to the provisions of 40 C.F.R. Part 61 Subpart V shall comply with the test methods and procedures requirements provided in Sections 8.3.4., 8.3.5., and 8.3.6. [40 C.F.R. §§ 61.245 (b), 61.245 (c), and 61.245 (d)] **[45CSR15, 40 C.F.R. § 61.245 (a)]**

8.3.4. Monitoring, as required in Sections 8.1.54. – 8.1.106. [40 C.F.R. §61.242], 40 C.F.R. 61.243, 40 C.F.R. 61.244, and Sections 8.1.39. – 8.1.46. [40 C.F.R. 61.135], shall comply with the following requirements:

(1) Monitoring shall comply with Method 21 of appendix A of 40 CFR part 60.

(2) The detection instrument shall meet the performance criteria of Method 21.

(3) The instrument shall be calibrated before use on each day of its use by the procedures specified in Method 21.

(4) Calibration gases shall be:

(i) Zero air (less than 10 ppm of hydrocarbon in air); and

(ii) A mixture of methane or n-hexane and air at a concentration of approximately, but less than, 10,000 ppm methane or n-hexane.

(5) The instrument probe shall be traversed around all potential leak interfaces as close to the interface as possible as described in Method 21.

**[45CSR15, 40 C.F.R. § 61.245 (b)]**

8.3.5. When equipment is tested for compliance with or monitored for no detectable emissions, the owner or operator shall comply with the following requirements:

(1) The requirements of Sections 8.3.4. (1) – (4) [40. C.F.R. §61.245 (b) (1) through (4)] shall apply.

(2) The background level shall be determined, as set forth in Method 21.

(3) The instrument probe shall be traversed around all potential leak interfaces as close to the interface as possible as described in Method 21.

(4) The arithmetic difference between the maximum concentration indicated by the instrument and the background level is compared with 500 ppm for determining compliance.

**[45CSR15, 40 C.F.R. § 61.245 (c)]**

8.3.6. (1) Each piece of equipment within a process unit that can conceivably contain equipment in VHAP service is presumed to be in VHAP service unless an owner or operator demonstrates that the piece of equipment is not in VHAP service. For a piece of equipment to be considered not in VHAP service, it must be determined that the percent VHAP content can be reasonably expected never to exceed 10 percent by weight. For purposes of determining the percent VHAP content of the process fluid that is contained in or contacts equipment, procedures that conform to the methods described in ASTM Method D-2267 (incorporated by the reference as specified in 40 C.F.R. §61.18) shall be used.

(2) (i) An owner or operator may use engineering judgment rather than the procedures in Section 8.3.6. (1) [40 C.F.R. §61.245 (d)(1)] to demonstrate that the percent VHAP content does not exceed 10 percent by weight, provided that the engineering judgment demonstrates that the VHAP content clearly does not exceed 10 percent by weight. When an owner or operator and the Administrator do not agree on whether a piece of equipment is not in VHAP service, however, the procedures in Section 8.3.6. (1) [40 C.F.R. §61.245 (d)(1)] shall be used to resolve the disagreement.

(ii) If an owner or operator determines that a piece of equipment is in VHAP service, the determination can be revised only after following the procedures in Section 8.3.6. (1) [40 C.F.R. §61.245 (d)(1)].

(3) Samples used in determining the percent VHAP content shall be representative of the process fluid that is contained in or contacts the equipment or the gas being combusted in the flare.

**[45CSR15, 40 C.F.R. § 61.245 (d)]**

8.3.7. An owner or operator shall determine the total annual benzene quantity from facility waste by the following procedure:

(1) For each waste stream subject to 40 C.F.R. Part 61 Subpart FF having a flow-weighted annual average water content greater than 10 percent water, on a volume basis as total water, or is mixed with water or other wastes at any time and the resulting mixture has an annual average water content greater than 10 percent as specified in Section 8.1.109. [40 C.F.R. §61.342(a)], the owner or operator shall:

(i) Determine the annual waste quantity for each waste stream using the procedures specified in Section 8.3.8. [40 C.F.R. §61.355 (b)].

(ii) Determine the flow-weighted annual average benzene concentration for each waste stream using the procedures specified in Section 8.3.9. [40 C.F.R. §61.355 (c)].

(iii) Calculate the annual benzene quantity for each waste stream by multiplying the annual waste quantity of the waste stream times the flow-weighted annual average benzene concentration.

(2) Total annual benzene quantity from facility waste is calculated by adding together the annual benzene quantity for each waste stream generated during the

year and the annual benzene quantity for each process unit turnaround waste annualized according to Section 8.3.8. (4) [40 C.F.R. §61.355 (b)(4)].

(4) If the total annual benzene quantity from facility waste is less than 10 Mg/yr (11 ton/yr) but is equal to or greater than 1 Mg/yr (1.1 ton/yr), then the owner or operator shall:

(i) Comply with the recordkeeping requirements of Section 8.4.13. and 8.4.14. [40 C.F.R. §61.356] and reporting requirements of Sections 8.5.10. and 8.5.11. [40 C.F.R. §61.357] of 40 C.F.R. Part 61 Subpart FF; and

(ii) Repeat the determination of total annual benzene quantity from facility waste at least once per year and whenever there is a change in the process generating the waste that could cause the total annual benzene quantity from facility waste to increase to 10 Mg/yr (11 ton/yr) or more.

**[45CSR15, 40 C.F.R. § 61.355 (a)]**

8.3.8. For purposes of the calculation required by Section 8.3.7. [40 C.F.R. §61.355 (a)], an owner or operator shall determine the annual waste quantity at the point of waste generation, unless otherwise provided in Section 8.3.8. (1) – (4) [40 C.F.R. §61.355 (b) (1), (2), (3), and (4)], by one of the methods given in Section 8.3.8. (5) – (7) [40 C.F.R. §61.355 (b) (5) through (7)].

(1) The determination of annual waste quantity for sour water streams that are processed in sour water strippers shall be made at the point that the water exits the sour water stripper.

(2) The determination of annual waste quantity for wastes at coke by-product plants subject to and complying with the control requirements of Sections 8.1.30. – 8.1.34., Sections 8.1.35. – 8.1.37., and Section 8.1.38. [40 C.F.R. §61.132, 61.133, 61.134, or 61.139 of subpart L of part 61] shall be made at the location that the waste stream exits the process unit component or waste management unit controlled by that subpart or at the exit of the ammonia still, provided that the following conditions are met:

(i) The transfer of wastes between units complying with the control requirements of 40 C.F.R. Part 61 Subpart L, process units, and the ammonia still is made through hard piping or other enclosed system.

(ii) The ammonia still meets the definition of a sour water stripper in 40 C.F.R. §61.341.

(3) The determination of annual waste quantity for wastes that are received at hazardous waste treatment, storage, or disposal facilities from offsite shall be made at the point where the waste enters the hazardous waste treatment, storage, or disposal facility.

(4) The determination of annual waste quantity for each process unit turnaround waste generated only at 2 year or greater intervals, may be made by dividing the total quantity of waste generated during the most recent process unit turnaround by the time period (in the nearest tenth of a year) between the turnaround resulting in generation of the waste and the most recent preceding process

turnaround for the unit. The resulting annual waste quantity shall be included in the calculation of the annual benzene quantity as provided in Section 8.3.7. (1)(iii) [40 C.F.R. §61.355 (a)(1)(iii)] for the year in which the turnaround occurs and for each subsequent year until the unit undergoes the next process turnaround. For estimates of total annual benzene quantity as specified in the 90-day report, required under Section 8.5.10. (1) [40 C.F.R. §61.357(a)(1)], the owner or operator shall estimate the waste quantity generated during the most recent turnaround, and the time period between turnarounds in accordance

with good engineering practices. If the owner or operator chooses not to annualize process unit turnaround waste, as specified in this paragraph, then the process unit turnaround waste quantity shall be included in the calculation of the annual benzene quantity for the year in which the turnaround occurs.

(5) Select the highest annual quantity of waste managed from historical records representing the most recent 5 years of operation or, if the facility has been in service for less than 5 years but at least 1 year, from historical records representing the total operating life of the facility;

(6) Use the maximum design capacity of the waste management unit; or

(7) Use measurements that are representative of maximum waste generation rates.

**[45CSR15, 40 C.F.R. § 61.355 (b)]**

8.3.9. For the purposes of the calculation required by Section 8.3.7. [40 C.F.R. §§61.355(a) of Subpart FF], an owner or operator shall determine the flow-weighted annual average benzene concentration in a manner that meets the requirements given in Section 8.3.9. (1)[40 C.F.R. §61.355 (c)(1)], using either of the methods given in Section 8.3.9. (2) and (3) [40 C.F.R. §61.355 (c)(2) and (c)(3)].

(1) The determination of flow-weighted annual average benzene concentration shall meet all of the following criteria:

(i) The determination shall be made at the point of waste generation except for the specific cases given in Section 8.3.9. (1)(i)(A) through (D) [40 C.F.R. §61.355 (c)(1)(i)(A) through (D)].

(A) The determination for sour water streams that are processed in sour water strippers shall be made at the point that the water exits the sour water stripper.

(B) The determination for wastes at coke by-product plants subject to and complying with the control requirements of Sections 8.1.30. – 8.1.34., Sections 8.1.35. – 8.1.37., and Section 8.1.38. [40 C.F.R. §61.132, 61.133, 61.134, or 61.139 of subpart L of Part 61] shall be made at the location that the waste stream exits the process unit component or waste management unit controlled by that subpart or at the exit of the ammonia still, provided that the following conditions are met:

(*I*) The transfer of wastes between units complying with the control requirements of subpart L of this part, process units, and the ammonia still is made through

hard piping or other enclosed system.

(2) The ammonia still meets the definition of a sour water stripper in 40 C.F.R. §61.341.

(C) The determination for wastes that are received from offsite shall be made at the point where the waste enters the hazardous waste treatment, storage, or disposal facility.

(D) The determination of flow-weighted annual average benzene concentration for process unit turnaround waste shall be made using either of the methods given in Section 8.3.9. (2) or (3) [40 C.F.R. §61.355 (c)(2) or (c)(3)]. The resulting flow-weighted annual average benzene concentration shall be included in the calculation of annual benzene quantity as provided in Section 8.3.7. (1)(iii) [40 C.F.R. §61.355 (a)(1)(iii)] for the year in which the turnaround occurs and for each subsequent year until the unit undergoes the next process unit turnaround.

(ii) Volatilization of the benzene by exposure to air shall not be used in the determination to reduce the benzene concentration.

(iii) Mixing or diluting the waste stream with other wastes or other materials shall not be used in the determination -- to reduce the benzene concentration.

(iv) The determination shall be made prior to any treatment of the waste that removes benzene, except as specified in Section 8.3.9. (1)(i)(A) through (D) [40 C.F.R. §61.355 (c)(1)(i)(A) through (D)].

(v) For wastes with multiple phases, the determination shall provide the weighted-average benzene concentration based on the benzene concentration in each phase of the waste and the relative proportion of the phases.

(2) *Knowledge of the waste.* The owner or operator shall provide sufficient information to document the flow-weighted annual average benzene concentration of each waste stream. Examples of information that could constitute knowledge include material balances, records of chemicals purchases, or previous test results provided the results are still relevant to the current waste stream conditions. If test data are used, then the owner or operator shall provide documentation describing the testing protocol and the means by which sampling variability and analytical variability were accounted for in the determination of the flow-weighted annual average benzene concentration for the waste stream. When an owner or operator and the Administrator do not agree on determinations of the flow-weighted annual average benzene concentration based on knowledge of the waste, the procedures under Section 8.3.9. (3) [40 C.F.R. §61.355 (c)(3)] shall be used to resolve the disagreement.

(3) Measurements of the benzene concentration in the waste stream in accordance with the following procedures:

(i) Collect a minimum of three representative samples from each waste stream. Where feasible, samples shall be taken from an enclosed pipe prior to the waste being exposed to the atmosphere.

(ii) For waste in enclosed pipes, the following procedures shall be used:

(A) Samples shall be collected prior to the waste being exposed to the atmosphere in order to minimize the loss of benzene prior to sampling.

(B) A static mixer shall be installed in the process line or in a by-pass line unless the owner or operator demonstrates that installation of a static mixer in the line is not necessary to accurately determine the benzene concentration of the waste stream.

(C) The sampling tap shall be located within two pipe diameters of the static mixer outlet.

(D) Prior to the initiation of sampling, sample lines and cooling coil shall be purged with at least four volumes of waste.

(E) After purging, the sample flow shall be directed to a sample container and the tip of the sampling tube shall be kept below the surface of the waste during sampling to minimize contact with the atmosphere.

(F) Samples shall be collected at a flow rate such that the cooling coil is able to maintain a waste temperature less than 10 °C (50 °F).

(G) After filling, the sample container shall be capped immediately (within 5 seconds) to leave a minimum headspace in the container.

(H) The sample containers shall immediately be cooled and maintained at a temperature below 10 °C (50 °F) for transfer to the laboratory.

(iii) When sampling from an enclosed pipe is not feasible, a minimum of three representative samples shall be collected in a manner to minimize exposure of the sample to the atmosphere and loss of benzene prior to sampling.

(iv) Each waste sample shall be analyzed using one of the following test methods for determining the benzene concentration in a waste stream:

(A) Method 8020, Aromatic Volatile Organics, in "Test Methods for Evaluating Solid Waste, Physical/Chemical Methods," EPA Publication No. SW-846 (incorporation by reference as specified in 40 C.F.R. §61.18);

(B) Method 8021, Volatile Organic Compounds in Water by Purge and Trap Capillary Column Gas Chromatography with Photoionization and Electrolytic Conductivity Detectors in Series in "Test Methods for Evaluating Solid Waste, Physical/Chemical Methods," EPA Publication No. SW-846 (incorporation by reference as specified in 40 C.F.R. §61.18);

(C) Method 8240, Gas Chromatography/Mass Spectrometry for Volatile Organics in "Test Methods for Evaluating Solid Waste, Physical/Chemical Methods," EPA Publication No. SW-846 (incorporation by reference as specified in 40 C.F.R. §61.18);

(D) Method 8260, Gas Chromatography/Mass Spectrometry for Volatile Organics: Capillary Column Technique in "Test Methods for Evaluating Solid Waste, Physical/Chemical Methods," EPA Publication No. SW-846 (incorporation by reference as specified in 40 C.F.R. §61.18);

(E) Method 602, Purgeable Aromatics, as described in 40 CFR part 136, appendix A, Test Procedures for Analysis of Organic Pollutants, for wastewaters for which this is an approved EPA methods; or

(F) Method 624, Purgeables, as described in 40 CFR part 136, appendix A, Test Procedures for Analysis of Organic Pollutants, for wastewaters for which this is an approved EPA method.

(ii) The flow-weighted annual average benzene concentration shall be calculated by averaging the results of the sample analyses as follows:

$$C = (1/Q_t) \times \sum_{i=1}^{n} Q_i C_i$$

Where:

C[bar]=Flow-weighted annual average benzene concentration for waste stream, ppmw.

$Q_t$=Total annual waste quantity for waste stream, kg/yr (lb/yr).

n=Number of waste samples (at least 3).

$Q_i$=Annual waste quantity for waste stream represented by Ci, kg/yr (lb/yr).

$C_i$=Measured concentration of benzene in waste sample i, ppmw.

**[45CSR15, 40 C.F.R. § 61.355 (c)]**

## Recordkeeping Requirements

8.4.1. The following information pertaining to the design of control equipment installed to comply with Sections 8.1.30. – 8.1.38. [40 C.F.R. §§ 61.132 through 61.134] shall be recorded and kept in a readily accessible location:

(1) Detailed schematics, design specifications, and piping and instrumentation diagrams.

(2) The dates and descriptions of any changes in the design specifications.

**[45CSR15, 40 C.F.R. § 61.138 (a)]**

8.4.2. The following information pertaining to sources subject to Sections 8.1.30. – 8.1.34. [40 C.F.R. § 61.132] and sources subject to Sections 8.1.35. – 8.1.37. [40 C.F.R. § 61.133] shall be recorded and maintained for 2 years following each semiannual (and other) inspection and each annual maintenance inspection:

(1) The date of the inspection and the name of the inspector.

(2) A brief description of each visible defect in the source or control equipment and the method and date of repair of the defect.

(3) The presence of a leak, as measured using the method described in Section 8.3.5. [40 C.F.R. § 61.245(c)]. The record shall include the date of attempted and actual repair and method of repair of the leak.

(4) A brief description of any system abnormalities found during the annual maintenance inspection, the repairs made, the date of attempted repair, and the date of actual repair.

**[45CSR15, 40 C.F.R. § 61.138 (b)]**

8.4.3. Each owner or operator of a source subject to Section 8.1.39. – 8.1.46. [40 C.F.R. § 61.135] shall comply with Sections 8.4.4. – 8.4.12. [40 C.F.R. § 61.246].
**[45CSR15, 40 C.F.R. § 61.138 (c)]**

8.4.4. (1) Each owner or operator subject to the provisions of 40 C.F.R. Part 16 Subpart V shall comply with the recordkeeping requirements of Sections 8.4.4. – 8.4.12. [40 C.F.R. § 61.246].

(2) An owner or operator of more than one process unit subject to the provisions of 40 C.F.R. Part 61 Subpart V may comply with the recordkeeping requirements for these process units in one recordkeeping system if the system identifies each record by each process unit.

**[45CSR15, 40 C.F.R. § 61.246 (a)]**

8.4.5. When each leak is detected as specified in Sections 8.1.54. – 8.1.68. [40 C.F.R §§61.242-2 and 61.242-3], Sections 8.1.81. – 8.1.92. [40 C.F.R §§61.242-7 and 61.242-8], and Sections 8.1.39. – 8.1.46. [40 C.F.R §61.135], the following requirements apply:

(1) A weatherproof and readily visible identification, marked with the equipment identification number, shall be attached to the leaking equipment.

(2) The identification on a valve may be removed after it has been monitored for 2 successive months as specified in Section 8.1.83. [40 C.F.R. §61.242-7(c)] and no leak has been detected during those 2 months.

(3) The identification on equipment, except on a valve, may be removed after it has been repaired.

**[45CSR15, 40 C.F.R. § 61.246 (b)]**

8.4.6. When each leak is detected as specified in Sections 8.1.54. – 8.1.68. [40 C.F.R §§61.242-2 and 61.242-3], Sections 8.1.81. – 8.1.92. [40 C.F.R §§61.242-7 and 61.242-8], and Sections 8.1.39. – 8.1.46. [40 C.F.R §61.135], the following information shall be recorded in a log and shall be kept for 2 years in a readily accessible location:

(1) The instrument and operator identification numbers and the equipment identification number.

(2) The date the leak was detected and the dates of each attempt to repair the leak.

(3) Repair methods applied in each attempt to repair the leak.

(4) "Above 10,000" if the maximum instrument reading measured by the methods specified in Section 8.3.3. [40 C.F.R. §61.245(a)] after each repair attempt is equal to or greater than 10,000 ppm.

(5) "Repair delayed" and the reason for the delay if a leak is not repaired within 15 calendar days after discovery of the leak.

(6) The signature of the owner or operator (or designate) whose decision it was that repair could not be effected without a process shutdown.

(7) The expected date of successful repair of the leak if a leak is not repaired within 15 calendar days.

(8) Dates of process unit shutdowns that occur while the equipment is unrepaired.

(9) The date of successful repair of the leak.

**[45CSR15, 40 C.F.R. § 61.246 (c)]**

8.4.7. The following information pertaining to the design requirements for closed-vent systems and control devices described in Sections 8.1.98. – 8.1.106. [40 C.F.R. §61.242-11] shall be recorded and kept in a readily accessible location:

(1) Detailed schematics, design specifications, and piping and instrumentation diagrams.

(2) The dates and descriptions of any changes in the design specifications.

(3) Periods when the closed-vent systems and control devices required in Sections 8.1.54. – 8.1.75. [40 C.F.R. §§61.242-2, 61.242-3, 61.242-4, 61.242-5] and 40 C.F.R. §61.242-9 are not operated as designed, including periods when a flare pilot light does not have a flame.

(4) Dates of startups and shutdowns of the closed-vent systems and control devices required in Sections 8.1.54. – 8.1.75. [40 C.F.R. §§61.242-2, 61.242-3, 61.242-4, 61.242-5] and 40 C.F.R. §61.242-9.

**[45CSR15, 40 C.F.R. § 61.246 (d)]**

8.4.8. The following information pertaining to all equipment to which a standard applies shall be recorded in a log that is kept in a readily accessible location:

(1) A list of identification numbers for equipment (except welded fittings) subject to the requirements of 40 C.F.R. Part 61 Subpart V.

(2) (i) A list of identification numbers for equipment that the owner or operator elects to designate for no detectable emissions as indicated by an instrument reading of less than 500 ppm above background.

(ii) The designation of this equipment for no detectable emissions shall be signed by the owner or operator.

(3) A list of equipment identification numbers for pressure relief devices required to comply with Section 8.1.69. [40 C.F.R. §61.242-4(a)].

(4) (i) The dates of each compliance test required in Sections 8.1.58., 8.1.68., 8.1.69. – 8.1.72., 8.1.86., and 8.1.45. [40 C.F.R. §§61.242-2(e), 61.242-3(i), 61.242-4, 61.242-7(f), and 61.135(g)].

(ii) The background level measured during each compliance test.

(iii) The maximum instrument reading measured at the equipment during each compliance test.

(5) A list of identification numbers for equipment in vacuum service.

**[45CSR15, 40 C.F.R. § 61.246 (e)]**

8.4.9. The following information pertaining to all valves subject to the requirements of Sections 8.1.87. and 8.1.88. [40 C.F.R. §61.242-7(g) and (h)] and to all pumps subject to the requirements of Sections 8.1.59. [40 C.F.R. §61.242-2(g)] shall be recorded in a log that is kept in a readily accessible location:

(1) A list of identification numbers for valves and pumps that are designated as unsafe to monitor, an explanation for each valve or pump stating why the valve or pump is unsafe to monitor, and the plan for monitoring each valve or pump.

(2) A list of identification numbers for valves that are designated as difficult to monitor, an explanation for each valve stating why the valve is difficult to monitor, and the planned schedule for monitoring each valve.

**[45CSR15, 40 C.F.R. § 61.246 (f)]**

8.4.10. The following information shall be recorded in a log that is kept in a readily accessible location:

(1) Design criterion required in Sections 8.1.57. (5), 8.1.65. (2), and 8.1.43. (4) [40 C.F.R. §§61.242-2(d)(5), 61.242-3(e)(2), and 61.135(e)(4)] and an explanation of the design criterion; and

(2) Any changes to this criterion and the reasons for the changes.

**[45CSR15, 40 C.F.R. § 61.246 (h)]**

8.4.11. The following information shall be recorded in a log that is kept in a readily accessible location for use in determining exemptions as provided in the applicability section of 40 C.F.R. Part 61 Subpart V and other specific subparts:

(1) An analysis demonstrating the design capacity of the process unit, and

(2) An analysis demonstrating that equipment is not in VHAP service.

**[45CSR15, 40 C.F.R. § 61.246 (i)]**

8.4.12. Information and data used to demonstrate that a piece of equipment is not in VHAP service shall be recorded in a log that is kept in a readily accessible location.
**[45CSR15, 40 C.F.R. § 61.246 (j)]**

8.4.13. Each owner or operator of a facility subject to the provisions of 40 C.F.R. Part 61 Subpart FF shall comply with the recordkeeping requirements of Sections 8.4.13. – 8.4.14. [40 C.F.R. § 61.356]. Each record shall be maintained in a readily accessible location at the facility site for a period not less than two years from the date the information is recorded unless otherwise specified.
**[45CSR15, 40 C.F.R. § 61.356 (a)]**

8.4.14. Each owner or operator shall maintain records that identify each waste stream at the facility subject to 40 C.F.R. Part 61 Subpart FF, and indicate whether or not the waste stream is controlled for benzene emissions in accordance with 40 C.F.R. Part 61 Subpart FF. In addition the owner or operator shall maintain the following records:

(1) For each waste stream not controlled for benzene emissions in accordance with 40 C.F.R. Part 61 Subpart FF, the records shall include all test results, measurements, calculations, and other documentation used to determine the following information for the waste stream: waste stream identification, water content, whether or not the waste stream is a process wastewater stream, annual waste quantity, range of benzene concentrations, annual average flow-weighted benzene concentration, and annual benzene quantity.

(2) For each waste stream exempt from 40 C.F.R. §61.342(c)(1) in accordance with 40 C.F.R. §61.342(c)(3), the records shall include:

(i) All measurements, calculations, and other documentation used to determine that the continuous flow of process wastewater is less than 0.02 liters (0.005 gallons) per minute or the annual waste quantity of process wastewater is less than 10 Mg/yr (11 ton/yr) in accordance with 40 C.F.R. §61.342(c)(3)(i), or

(ii) All measurements, calculations, and other documentation used to determine that the sum of the total annual benzene quantity in all exempt waste streams does not exceed 2.0 Mg/yr (2.2 ton/yr) in accordance with 40 C.F.R. §61.342(c)(3)(ii).

(3) For each facility where the annual waste quantity for process unit turnaround waste is determined in accordance with Section 8.3.8. (5) [40 C.F.R. §61.355(b)(5)], the records shall include all test results, measurements, calculations, and other documentation used to determine the following information: identification of each process unit at the facility that undergoes turnarounds, the date of the most recent turnaround for each process unit, identification of each process unit turnaround waste, the water content of each process unit turnaround waste, the annual waste quantity determined in accordance with Section 8.3.8. (5) [40 C.F.R. §61.355(b)(5)], the range of benzene concentrations in the waste, the annual average flow-weighted benzene concentration of the waste, and the annual benzene quantity calculated in accordance with Section 8.3.7. (1)(iii) [40 C.F.R. §61.355 (a)(1)(iii)].

**[45CSR15, 40 C.F.R. § 61.356 (b)]**

## Reporting Requirements

8.5.1. The permittee shall review and determine on a monthly basis if there were any exceedance of the conditions set forth under Sections 3.1.19., 3.1.38., 4.1.32. – 4.1.34., 5.1.1. - 5.1.2., and 5.1.16. - 5.1.18., 8.1.5. - 8.1.21. of this permit. Should the permittee determine that a exceedance occurred, then the permittee shall submit a written report describing what the exceedance was and what measures the permittee has taken to prevent the exceedance from re-occurring.
**[45CSR13, R13-1939A, B.7.]**

8.5.2. A report shall be submitted to the Administrator semiannually starting 6 months after the initial reports required in 40 C.F.R.§ 61.138(e) and 40 C.F.R § 61.10, which includes the following information:

(1) For sources subject to Sections 8.1.30. – 8.1.34. [40 C.F.R. § 61.132] and sources subject to Sections 8.1.35. – 8.1.37. [40 C.F.R. § 61.133],

(i) A brief description of any visible defect in the source or ductwork,

(ii) The number of leaks detected and repaired, and

(iii) A brief description of any system abnormalities found during each annual maintenance inspection that occurred in the reporting period and the repairs made.

(2) For equipment in benzene service subject to Section 8.1.39. [40 C.F.R.§ 61.135(a)], information required by Section 8.5.7. [40 C.F.R. § 61.247(b)].

(3) For each exhauster subject to Sections 8.1.39. – 8.1.46. [40 C.F.R. § 61.135] for each quarter during the semiannual reporting period,

(i) The number of exhausters for which leaks were detected as described in Sections 8.1.42. and 8.1.43. (5) [40 C.F.R. §61.135 (d) and (e)(5)],

(ii) The number of exhausters for which leaks were repaired as required in Sections 8.1.42. and 8.1.43. (6) [40 C.F.R. §61.135 (d) and (e)(6)].

(iii) The results of performance tests to determine compliance with Section 8.1.45. [40 C.F.R. § 61.135(g)] conducted within the semiannual reporting period.

(4) A statement signed by the owner or operator stating whether all provisions of 40 C.F.R. Part 61 Subpart L, have been fulfilled during the semiannual reporting period.

(6) Revisions to items reported according to 40 C.F.R. § 61.138 (e) if changes have occurred since the initial report or subsequent revisions to the initial report.

**Note:**

Compliance with the requirements of 40 C.F.R. § 61.10(c) is not required for revisions documented under Section 8.4.1. - 8.4.3. and 8.5.2.-8.5.5. [40 C.F.R. § 61.138].

**[45CSR15, 40 C.F.R. § 61.138 (f)]**

8.5.3. In the first report submitted as required in 40 C.F.R. § 61.138(e), the report shall include a reporting schedule stating the months that semiannual reports shall be submitted. Subsequent reports shall be submitted according to that schedule unless a revised schedule has been submitted in a previous semiannual report.
**[45CSR15, 40 C.F.R. § 61.138 (g)]**

8.5.4. An owner or operator electing to comply with the provisions of 40 C.F.R. §§ 61.243-1 and 61.243-2 shall notify the Administrator of the alternative standard selected 90 days before implementing either of the provisions.
**[45CSR15, 40 C.F.R. § 61.138 (h)]**

8.5.5. An application for approval of construction or modification, as required under 40 C.F.R. §§ 61.05(a) and 61.07, will not be required for sources subject to Sections 8.1.39. – 8.1.46. [40 C.F.R. § 61.135] if:

(1) The new source complies with Sections 8.1.39. – 8.1.46. [40 C.F.R. § 61.135], and

(2) In the next semiannual report required by Section 8.5.2. [40 C.F.R. § 61.138(f)], the information described in 40 C.F.R. § 61.138(e)(4) is reported.

**[45CSR15, 40 C.F.R. § 61.138 (i)]**

8.5.6. The statement is to contain the following information for each source:

(i) Equipment identification number and process unit identification.

(ii) Type of equipment (for example, a pump or pipeline valve).

(iii) Percent by weight VHAP in the fluid at the equipment.

(iv) Process fluid state at the equipment (gas/vapor or liquid).

(v) Method of compliance with the standard (for example, "monthly leak detection and repair" or "equipped with dual mechanical seals").

**[45CSR15, 40 C.F.R. § 61.247 (a) (5)]**

8.5.7. A report shall be submitted to the Administrator semiannually starting 6 months after the initial report required in 40 C.F.R. §61.247 (a), that includes the following information:

(1) Process unit identification.

(2) For each month during the semiannual reporting period,

(i) Number of valves for which leaks were detected as described in Section 8.1.82. [40 C.F.R. §61.242-7(b)] of 40 C.F.R. §61.243-2.

(ii) Number of valves for which leaks were not repaired as required in Section 8.1.82. [40 C.F.R. §61.242-7(b)].

(iii) Number of pumps for which leaks were detected as described in Section 8.1.55. and 8.1.57. (6) [40 C.F.R. §61.242-2(b) and (d)(6)].

(iv) Number of pumps for which leaks were not repaired as required in Section 8.1.56. and 8.1.57. (6) [40 C.F.R. §61.242-2(c) and (d)(6)].

(v) Number of compressors for which leaks were detected as described in Section 8.1.66. [40 C.F.R. §61.242-3(f)].

(vi) Number of compressors for which leaks were not repaired as required in Section 8.1.67. [40 C.F.R. §61.242-3(g)].

(vii) The facts that explain any delay of repairs and, where appropriate, why a process unit shutdown was technically infeasible.

(3) Dates of process unit shutdowns which occurred within the semiannual reporting period.

(4) Revisions to items reported according to 40 C.F.R. §61.247 (a)(1) if changes have occurred since the initial report or subsequent revisions to the initial report.

**Note:**

Compliance with the requirements of 40 C.F.R. §61.10(c) is not required for revisions documented under this Section 8.5.7. [40 C.F.R. §61.247 (b)].

(5) The results of all performance tests and monitoring to determine compliance with no detectable emissions and with 40 C.F.R. §§61.243 - 1 and 61.243 - 2 conducted within the semiannual reporting period.

**[45CSR15, 40 C.F.R. § 61.247 (b)]**

8.5.8. In the first report submitted as required in 40 C.F.R. §61.247 (a), the report shall include a reporting schedule stating the months that semiannual reports shall be submitted. Subsequent reports shall be submitted according to that schedule, unless a revised schedule has been submitted in a previous semiannual report.
**[45CSR15, 40 C.F.R. § 61.247 (c)]**

8.5.9. An application for approval of construction or modification, 40 C.F.R. §§61.05(a) and 61.07, will not be required if –

(1) The new source complies with the standard, Sections 8.1.49. – 8.1.106. [40 C.F.R. §61.242];

(2) The new source is not part of the construction of a process unit; and

(3) In the next semiannual report required by Section 8.5.7. [40 C.F.R. §61.247 (b)], the information in Section 8.5.6. (5) [40 C.F.R. §61.247 (a)(5)] is reported.

**[45CSR15, 40 C.F.R. § 61.247 (e)]**

8.5.10. Each owner or operator of a chemical plant, petroleum refinery, coke by-product recovery plant, and any facility managing wastes from these industries shall submit to the Administrator within 90 days after January 7, 1993, or by the initial startup for a new source with an initial startup after the effective date, a report that summarizes the regulatory status of each waste stream subject to Sections 8.1.49. and 8.1.106. [40 C.F.R. §61.342] and is determined by the procedures specified in Section 8.3.9. [40 C.F.R. §61.355(c)] to contain benzene. Each owner or operator subject to 40 C.F.R. Part 61 Subpart FF who has no benzene onsite in wastes, products, by-products, or intermediates shall submit an initial report that is a statement to this effect. For all other owners or operators subject to 40 C.F.R. Part 61 Subpart L, the report shall include the following information:

(1) Total annual benzene quantity from facility waste determined in accordance with Section 8.3.7. [40 C.F.R. §61.355(a)] of 40 C.F.R. Part 61 Subpart FF.

(2) A table identifying each waste stream and whether or not the waste stream will be controlled for benzene emissions in accordance with the requirements of 40 C.F.R. Part 61 Subpart FF.

(3) For each waste stream identified as not being controlled for benzene emissions in accordance with the requirements of 40 C.F.R. Part 61 Subpart FF the following information shall be added to the table:

(i) Whether or not the water content of the waste stream is greater than 10 percent;

(ii) Whether or not the waste stream is a process wastewater stream, product tank drawdown, or landfill leachate;

(iii) Annual waste quantity for the waste stream;

(iv) Range of benzene concentrations for the waste stream;

(v) Annual average flow-weighted benzene concentration for the waste stream; and

(vi) Annual benzene quantity for the waste stream.

(4) The information required in Section 8.5.10. (1), (2), and (3) [40 C.F.R. §61.357 (a) (1), (2), and (3)] should represent the waste stream characteristics based on current configuration and operating conditions. An owner or operator only needs to list in the report those waste streams that contact materials containing benzene. The report does not need to include a description of the controls to be installed to comply with the standard or other information required in 40 C.F.R. §61.10(a). **[45CSR15, 40 C.F.R. § 61.357 (a)]**

8.5.11. If the total annual benzene quantity from facility waste is less than 10 Mg/yr (11 ton/yr) but is equal to or greater than 1 Mg/yr (1.1 ton/yr), then the owner or operator shall submit to the Administrator a report that updates the information listed in Section 8.5.10. (1) through (3) [40 C.F.R. §61.357 (a) (1) through (3)]. The report shall be submitted annually and whenever there is a change in the process generating the waste stream that could cause the total annual benzene quantity from facility waste to increase to 10 Mg/yr (11 ton/yr) or more. If the information in the annual report required by Sections 8.5.10. (1) through (3) [40 C.F.R. §§ 61.357 (a)(1) through (a)(3)] is not changed in the following year, the owner or operator may submit a statement to that effect.
**[45CSR15, 40 C.F.R. § 61.357 (c)]**

# ATTACHMENT O

## Source Specific Requirements for Emergency Air Compressor and Emergency Generator

(Reserved)

(Reserved)

9.1.1. The emergency backup air compressor shall be permanently installed emergency diesel-fired backup air compressor set (S6) with a maximum rating of 600 hp.
**[45CSR13, R13-2632, 4.1.1.]**

9.1.2. The emergency backup air compressor (S6) should be limited to a maximum operating schedule of 500 hours per year each in emergency situations and for routine testing and maintenance. Of this 500 hours, only 50 hours per year each can be used for non-emergency situations as defined in 40 CFR §§63.6675 (Part 63 Subpart ZZZZ).
**[40CFR§§63.6675 and 45CSR13, R13-2632, 4.1.2.]**

9.1.3. The emergency backup air compressor S6 shall be limited to using a maximum of 18.2 gallons per hour and 9,100 gallons per year of #2 diesel fuel. Compliance with the annual fuel usage limit shall be determined using a rolling yearly total. A rolling yearly total shall mean the sum of the fuel usage at any given time for the previous twelve (12) consecutive calendar months.
**[45CSR13, R13-2632, 4.1.3.]**

9.1.4. The emissions from the emergency backup air compressor (S6) shall not exceed the limits shown in the following table:

| Emission Unit ID # | Pollutant | Annual Rate[1] tons/yr | Hourly Rate[2] lb/hr |
|---|---|---|---|
| S-1 | $NO_x$ | 2.49 | 9.99 |
| | $SO_2$ | 0.03 | 0.1 |
| | CO | 0.18 | 0.71 |
| | $PM_{10}$ | 0.03 | 0.12 |
| | VOC | 0.05 | 0.18 |
| | Formaldehyde | 0.00005 | 0.0002 |
| | Total HAPs | 0.009 | 0.036 |

1 - Annual emissions are based on a operating schedule of 500 hours per year.
2 - Hourly emission rates are determined using engine manufacture's information and US EPA emission factors (PM 0.07 grams/Kw-hr, CO 0.4 g/Kw-hr, $SO_2$ 47.6 g/Kw-hr, Hc 0.10 g/kw-hr, and US EPA MACT document for HAP of 0.0359 lbs/hr operation, Formaldehyde 7.89E-05 lb/MM Btu.)

**[45CSR13, R13-2632, 4.1.4.]**

9.1.5. The following operating limits and conditions are specific to the construction of the Emergency Diesel Engine-powered Generator (Source ID S26):

(1) The generator shall be powered by a diesel engine with a maximum output rating of 527 horsepower (350 kilowatts).

(2) The maximum fuel consumption rate of the generator shall be limited to 24.7 gallons per hour and 12,350 gallons per year.

(3) The maximum annual operating schedule of the generator shall not exceed 500 hours per year. [40CFR§63.6675]

(4) The emissions from Source S26 shall be vented through Emission Point E1.

**[45CSR13, R13-2591A, 4.1.7., 45CSR34 and 40CFR63 Subpart ZZZZ]**

9.1.6. Compliance with all annual operating limits set forth in 9.1.2 - 9.1.5. of this permit shall be determined using a twelve month rolling total. A twelve month rolling total shall mean the sum of the amount of hours operated at any given time during the previous twelve (12) consecutive calendar months.
**[45CSR13, R13-2632, 4.1.6. and R13-2591A, 4.1.11.]**

## Monitoring Requirements

None.

## Testing Requirements

9.3.1. See Facility Wide Testing Requirements (Sec. 3.3.1.).

## Recordkeeping Requirements

9.4.1. For the purpose of demonstrating compliance with the hours of operation set forth in 9.1.2. and 9.1.5(3), the permittee shall maintain accurate records of operating hours of the emergency backup air compressor (S6) and emergency generator (S26). Said records shall be maintained in accordance with section 3.4.2. of this permit.
**[45CSR13, R13-2632, 4.4.3. and 45CSR§30-5.1.c.]**

9.4.2. For the purpose of demonstrating compliance with the fuel usage limits set forth in 9.1.3. and 9.1.5(2), the permittee shall maintain accurate records of fuel usage of the emergency backup air compressor (S6) and emergency generator (S26). Said records shall be maintained in accordance with section 3.4.2 of this permit.
**[45CSR13, R13-2632, 4.4.4. and 45CSR§30-5.1.c]**

## Reporting Requirements

None.