Dominion Resources Services, Inc.
5000 Dominion Boulevard, Glen Allen, VA 23060
Web Address: www.dom.com

Dominion®

September 4, 2009

Mr. John Benedict
West Virginia Department of Environmental Protection
Division of Air Quality
601 57th Street, SE
Charleston, West Virginia 25304

Re: ***North Branch Power Station, Title V Permit Renewal Application***
Facility ID: R30-02300014-2005

Dear Mr. Benedict:

Dominion is pleased to provide four copies (two electronic and two paper copies) of the Title V Permit Renewal Application (with appropriate attachments) for our North Branch Power Station located at 2000 Energy Way in Gormania, WV.

Dominion recognizes that this renewal application triggers a review of 40 CFR Part 64, the Compliance Assurance Monitoring (CAM) program. The only CAM-affected pollutant is PM. A proposed approach to meet the CAM requirements is also enclosed. This renewal also incorporates provisions of the April 21, 2003 Consent Decree between the United States of America et al. and Virginia Electric and Power Company as stipulated in the decree.

We believe the provided information is sufficient to deem the application administratively complete and begin the technical review process. However, should you have any questions concerning this submittal please contact Liz Willoughby at (804) 273-3740, (Elizabeth.A.Willoughby@dom.com).

Sincerely,

Cathy C. Taylor

Cathy C. Taylor
Director, Electric Environmental Services

cc: **(CERTIFIED MAIL)**

Director, Air Enforcement Division
Office of Enforcement and Compliance Assurance
U.S. Environmental Protection Agency
Ariel Rios Building (2242A)
1200 Pennsylvania Avenue, N.W.
Washington, D.C. 20460

Regional Administrator
U.S. EPA Region III
1650 Arch Street
Philadelphia, PA 19106

Director
Virginia Department of Environmental Quality
629 East Main Street
P.O. Box 10009
Richmond, VA 23240-0009

Director, Division of Air Quality
Department of Environmental Protection
601 57th Street
Charleston, WV 25304

Bureau Chief
Environmental Protection Bureau
New York Attorney General's Office
120 Broadway
New York, New York 10271

Administrator
Air and Environmental Quality Compliance and Enforcement
P.O. Box 422
401 East State Street, Floor 4
Trenton, NJ 08625

Section Chief
Environmental Enforcement
Division of Law
P.O. Box 093
25 Market Street, 7th Floor
Trenton, NJ 08625

Department Head
Environmental Protection Department Connecticut Attorney General's Office
55 Elm Street
Hartford, CT 06106

Dominion Energy
Vice President- Fossil and Hydro
5000 Dominion Boulevard
Glen Allen, VA 23060

Chief Environmental Enforcement Section
U.S. Department of Justice
P.O. Box 7611, Ben Franklin Station
Washington, D.C. 20044-7611

APPLICATION FOR TITLE V PERMIT RENEWAL APPLICATION
North Branch Power Station
R30-02300014-2005

Table of Contents

Section	Title
1	Title V Permit Application – General Forms
2	Facility Area Map.....Attachment A
3	Facility Plot Plan.....Attachment B
4	Process Flow Diagrams.....Attachment C • Ash Handling emission sources • Flue Gas Boiler 1A emission sources • Flue Gas Boiler 1B emission sources • Fuel Handling emission sources (3) • Limestone handling emission sources (2) • Propane emission sources
5	Emission Units Tables.....Attachment D
6	Emission Unit Forms.....Attachment E
7	Air Pollution Control Device Forms.....Attachment G
8	Compliance Assurance Monitoring Plan Forms..... Attachment H
9	Emission Calculations..... Attachment I

TITLE V PERMIT APPLICATION- GENERAL FORMS

WEST VIRGINIA DEPARTMENT OF ENVIRONMENTAL PROTECTION

DIVISION OF AIR QUALITY

601 57th Street SE
Charleston, WV 25304
Phone: (304) 926-0475
www.wvdep.org/daq

TITLE V PERMIT APPLICATION - GENERAL FORMS

Section 1: General Information

1. **Name of Applicant (As registered with the WV Secretary of State's Office):** Virginia Electric and Power Company	**2. Facility Name or Location:** North Branch Power Station
3. DAQ Plant ID No.: 023-00014	**4. Federal Employer ID No. (FEIN)** 54-0418825

5. **Permit Application Type:**

☐ . Initial Permit — When did operations commence? **10/14/1992
☒ . Permit Renewal — What is the expiration date of the existing permit? 03/29/2010
☐ . Update to Initial Permit Application — **Issuance of initial permit R13-1020B/R14-4B

6. Type of Business Entity:

☒ . Corporation ☐ . Governmental Agency
☐ . Partnership ☐ . Limited Partnership

7. Is the Applicant the:

☐ Owner ☐ Operator ☒ Both

If the Applicant is not both the owner and operator, please provide the name and address of the other party.

8. Number of onsite employees:

38

9. Governmental Code:

☒ . Privately owned and operated; 0
☐ . Federally owned and operated; 1
☐ . State government owned and operated; 2
☐ . County government owned and operated; 3
☐ . Municipality government owned and operated; 4
☐ . District government owned and operated; 5

10. Business Confidentiality Claims

Does this application include confidential information (per 45CSR31)? ☐ Yes ☒ No

If yes, identify each segment of information on each page that is submitted as confidential, and provide justification for each segment claimed confidential, including the criteria under 45CSR§31-4.1, and in accordance with the DAQ's *"PRECAUTIONARY NOTICE-CLAIMS OF CONFIDENTIALITY"* guidance.

11. Mailing Address

Street or P.O. Box:
c/o Cathy Taylor
5000 Dominion Boulevard
Glen Allen, VA 23060

City: Glen Allen	**State:** VA	**Zip:** 23060-3308
Telephone Number: (804) 273-2929	**Fax Number:** (804) 273-3410	

12. Facility Location

Street: 2000 Energy Way	**City:** Gormania	**County:** Grant County
UTM Easting: 643.92 km	**UTM Northing:** 4346.99 km	**Zone:** ☒ 17 or ☐ 18

Directions: Traveling north on WV State Route 90 from Bayard, turn right onto Bayard Cemetery Road, turn south off Bayard Cemetery Road at approximately 1.5 miles and proceed south for .9 miles to plant entrance.

Portable Source? ☐ Yes ☒ No

Is facility located within a nonattainment area? ☐ Yes ☒ No	**If yes, for what air pollutants?** N/A
Is facility located within 50 miles of another state? ☒ Yes ☐ No	**If yes, name the affected state(s).** Maryland, Pennsylvania, Virginia
Is facility located within 100 km of a Class I Area[1]? ☒ Yes ☐ No **If no, do emissions impact a Class I Area[1]?** ☐ Yes ☒ No	**If yes, name the area(s).** Dolly Sods, Otter Creek Wilderness

[1] *Class I areas include Dolly Sods and Otter Creek Wilderness Areas in West Virginia, and Shenandoah National Park and James River Face Wilderness Area in Virginia.*

13. Contact Information

Responsible Official: Roger Shears	**Title:** Station Director, Fossil & Hydro

Street or P.O. Box: HC #76 Box 430		
City: Mt Storm	**State:** WV	**Zip:** 26739-9711
Telephone Number: (304) 259-4024	**Fax Number:** (304) 259-4011	
E-mail address: Roger.Shears@dom.com		
Environmental Contact: Kristin Edwards		**Title:** Supervisor, Environmental
Street or P.O. Box: HC #76 Box 430		
City: Mt. Storm	**State:** WV	**Zip:** 26739-9711
Telephone Number: (304) 259-4402	**Fax Number:** (304) 259-4011	
E-mail address: Kristin.D.Edwards@dom.com		
Application Preparer: Elizabeth Willoughby		**Title:** Environmental Specialist
Company: Dominion		
Street or P.O. Box: 5000 Dominion Boulevard		
City: Glen Allen	**State:** VA	**Zip:** 23060
Telephone Number: (804) 273-3740	**Fax Number:** (804) 273-2964	
E-mail address: Elizabeth.A.Willoughby@dom.com		

14. Facility Description

List all processes, products, NAICS and SIC codes for normal operation, in order of priority. Also list any process, products, NAICS and SIC codes associated with any alternative operating scenarios if different from those listed for normal operation.

Process	Products	NAICS	SIC
Coal refuse-fired electric generation facility	Electricity	221112	4911

Provide a general description of operations.

The North Branch Power Station is a coal refuse-fired electric generation facility and operates under Standard Industrial Classification (SIC) code 4911. The facility consists of two (2) coal refuse-fired circulating fluidized bed boilers each with a rated design capacity of 597 mmBtu/hr, and various supporting operations such as coal refuse handling, ash handling, limestone handling, and various tanks with insignificant emissions. The facility has the potential to operate seven (7) days per week, twenty-four (24) hours per day and fifty-two (52) weeks per year.

15. Provide an **Area Map** showing plant location as **ATTACHMENT A**.

16. Provide a **Plot Plan(s)**, e.g. scaled map(s) and/or sketch(es) showing the location of the property on which the stationary source(s) is located as **ATTACHMENT B**. For instructions, refer to "Plot Plan - Guidelines."

17. Provide a detailed **Process Flow Diagram(s)** showing each process or emissions unit as **ATTACHMENT C**. Process Flow Diagrams should show all emission units, control equipment, emission points, and their relationships.

18. Applicable Requirements Summary	
Instructions: Mark all applicable requirements.	
☒ . SIP	☐ . FIP
☒ . Minor source NSR (45CSR13)	☒ . PSD (45CSR14)
☒ . NESHAP (45CSR15)	☐ . Nonattainment NSR (45CSR19)
☒ . Section 111 NSPS	☐ . Section 112(d) MACT standards
☐ . Section 112(g) Case-by-case MACT	☐ . 112(r) RMP
☐ . Section 112(i) Early reduction of HAP	☐ . Consumer/commercial prod. reqts., section 183(e)
☐ . Section 129 Standards/Reqts.	☐ . Stratospheric ozone (Title VI)
☐ . Tank vessel reqt., section 183(f)	☐ . Emissions cap 45CSR§30-2.6.1
☐ . NAAQS, increments or visibility (temp. sources)	☐ . 45CSR27 State enforceable only rule
☒ . 45CSR4 State enforceable only rule	☒ Acid Rain (Title IV, 45CSR33)
☐ . Emissions Trading and Banking (45CSR28)	☒ . Compliance Assurance Monitoring (40CFR64)
☐ . NO_x Budget Trading Program Non-EGUs (45CSR1)	☒ . NO_x Budget Trading Program EGUs (45CSR26)

19. Non Applicability Determinations

List all requirements which the source has determined not applicable and for which a permit shield is requested. The listing shall also include the rule citation and the reason why the shield applies.

The following requirements specifically identified are not applicable to the source based on the determinations set forth below. The permit shield shall apply to the following requirements provided the conditions of the determinations are met.

40 CFR 60 Subpart D 40 CFR 60 Subpart Db 40 CFR 60 Subpart Dc	**40 CFR 60 Subpart Da Applies to this facility.**
40 CFR 60 Subpart K	The facility does not include storage vessels that are used to store petroleum liquids (as defined in 40 CFR 60.111(b)) which construction, reconstruction, or modification commenced prior to May 19, 1978.
40 CFR 60 Subpart Ka	**The facility does not include storage vessels that are used to store petroleum liquids (as defined in 40 CFR 60.111a(b)) which construction, reconstruction, or modification commenced prior to July 23, 1984.**
40 CFR 60 Subpart Kb	**Storage vessels potentially affected by this subpart (except for the propane storage vessels) have a storage capacity of less than 75 cubic meters and therefore are not subject to this subpart. The propane storage vessels (*T-PR-1, -2, -3, -4, -5, -6*) are designed to operate in excess of 204.9 kPa without emissions to the atmosphere and therefore are not subject to this subpart.**
40 CFR 60 Subpart GG	**The facility does not have any stationary gas turbines.**
40 CFR 68	The facility does not have materials subject to this requirement.
40 CFR 82 Subpart B	The facility does not conduct motor vehicle maintenance involving CFCs on site.

- (Note this section is copied from Condition 3.7.2 of the Current Title V permit)

☒ Permit Shield

20. Facility-Wide Applicable Requirements

For all facility-wide applicable requirements listed above, provide monitoring/testing / recordkeeping / reporting which shall be used to demonstrate compliance. If the method is based on a permit or rule, include the condition number and/or citation. (Note: Each requirement listed above must have an associated method of demonstrating compliance. If there is not already a required method in place, then a method must be proposed.)

Facility-wide monitoring / testing / recordkeeping / reporting requirements are listed below by number. The numbers are linked to detailed information contained in Table 20B. Monitoring / testing / recordkeeping / reporting requirements are also referenced for each applicable requirement from the last column of Table 20A (applicable requirements)

FWTRR-1
FWTRR-2
FWTRR-3
FWTRR-4
FWTRR-5
FWTRR-6
FWTRR-7
FWTRR-8
FWTRR-9
FWTRR-10
FWTRR-11
FWTRR-12
FWTRR-13
FWTRR-14
FWTRR-15
FWTRR-16
FWTRR-17

Are you in compliance with all facility-wide applicable requirements? ☒ Yes ☐ No

If no, complete the **Schedule of Compliance Form** as **ATTACHMENT F**.

20A. Facility-Wide Applicable Requirements

List all facility-wide applicable requirements. For each applicable requirement, include the rule citation and/or permit with the condition number.

Link From General Form, Item 20	Applicable Requirement Citation	Permit Condition Number from Permit R30-02300014-2005	Requirement Summary	Monitoring / Testing / Recordkeeping / Reporting Requirement Links
FWAR-1	45CSR§6-3.1	3.1.1	**Open burning.** The open burning of refuse by any person, firm, corporation, association or public agency is prohibited except as noted in 45CSR§6-3.1.	None Required
FWAR-2	45CSR§6-3.2	3.1.2	**Open burning exemptions.** The exemptions listed in 45CSR§6-3.1 are subject to the following stipulation: Upon notification by the Secretary, no person shall cause, suffer, allow or permit any form of open burning during existing or predicted periods of atmospheric stagnation. Notification shall be made by such means as the Secretary may deem necessary and feasible.	None Required
FWAR-3	40 C.F.R. 61 and 45CSR15	3.1.3	**Asbestos.** The permittee is responsible for thoroughly inspecting the facility, or part of the facility, prior to commencement of demolition or renovation for the presence of asbestos and complying with 40 C.F.R. § 61.145, 40 C.F.R. § 61.148, and 40 C.F.R. § 61.150. The permittee must notify the Secretary at least ten (10) working days prior to the commencement of any asbestos removal on the forms prescribed by the Secretary if the permittee is subject to the notification requirements of 40 C.F.R. § 61.145(b)(3)(i). A copy of this notice is required to be sent to the USEPA, the Division of Waste Management and the Bureau for Public Health - Environmental Health.	FWTRR-9
FWAR-4	45CSR§4-3.1 State-Enforceable only	3.1.4	**Odor.** No person shall cause, suffer, allow or permit the discharge of air pollutants which cause or contribute to an objectionable odor at any location occupied by the public.	FWTRR-4

20A. Facility-Wide Applicable Requirements

List all facility-wide applicable requirements. For each applicable requirement, include the rule citation and/or permit with the condition number.

Link From General Form, Item 20	Applicable Requirement Citation	Permit Condition Number from Permit R30-02300014-2005	Requirement Summary	Monitoring / Testing / Recordkeeping / Reporting Requirement Links
FWAR-5	45CSR§13-10.5	3.1.5	**Permanent shutdown.** A source which has not operated at least 500 hours in one 12-month period within the previous five (5) year time period may be considered permanently shutdown, unless such source can provide to the Secretary, with reasonable specificity, information to the contrary. All permits may be modified or revoked and/or reapplication or application for new permits may be required for any source determined to be permanently shutdown.	None Required
FWAR-6	45CSR§11-5.2	3.1.6	**Standby plan for reducing emissions.** When requested by the Secretary, the permittee shall prepare standby plans for reducing the emissions of air pollutants in accordance with the objectives set forth in Tables I, II, and III of 45CSR11. .	None Required (not required for this facility)
FWAR-7	W.Va. Code § 22-5-4(a)(14)	3.1.7	**Emission inventory.** The permittee is responsible for submitting, on an annual basis, an emission inventory in accordance with the submittal requirements of the Division of Air Quality.	FWTRR-3 FWTRR-7 FWTRR-9 FWTRR-10 FWTRR-11
FWAR-8	40 C.F.R. 82 Subpart F	3.1.8	**Ozone-depleting substances.** For those facilities performing maintenance, service, repair or disposal of appliances, comply with the standards for recycling and emissions reduction pursuant to 40 C.F.R. Part 82, Subpart F, except as provided for Motor Vehicle Air Conditioners (MVACs) in Subpart B: **a.** Persons opening appliances for maintenance, service, repair, or disposal must comply with the prohibitions and required practices pursuant to 40 C.F.R. §§ 82.154 and 82.156. **b.** Equipment used during the maintenance, service, repair, or disposal of appliances must comply with the standards for recycling and recovery equipment pursuant to 40 C.F.R. § 82.158. **c.** Persons performing maintenance, service, repair, or disposal of appliances must be certified by an approved technician certification program pursuant to 40 C.F.R. § 82.161.	None Required

20A. Facility-Wide Applicable Requirements

List all facility-wide applicable requirements. For each applicable requirement, include the rule citation and/or permit with the condition number.

Link From General Form, Item 20	Applicable Requirement Citation	Permit Condition Number from Permit R30-02300014-2005	Requirement Summary	Monitoring / Testing / Recordkeeping / Reporting Requirement Links
FWAR-9	40 C.F.R. 68	3.1.9	**Risk Management Plan.** Should this stationary source, as defined in 40 CFR Part 68.3, become subject to Part 68, a risk management plan (RMP) must be submitted by the date specified in 40 CFR Part 68.10 and shall certify compliance with the requirements of Part 68 as part of the annual compliance certification as required by 40 C.F.R. Part 70 or 71.	FWTRR-1 (not required for this facility)
FWAR-10	45CSR§2-5., 45 CSR13/14 – Permit No. R13-1020B/R14-4B§(B)(2)(f)	3.1.11	**Fugitive Particulate Matter Control.** No person shall cause, suffer, allow, or permit any source of fugitive particulate matter to operate that is not equipped with a fugitive particulate matter control system. This system shall be operated and maintained in such a manner as to minimize the emission of fugitive particulate matter. Sources of fugitive particulate matter associated with fuel burning units shall include, but not be limited to, the following: **a.** Stockpiling of ash or fuel either in the open or in enclosures such as silos; **b.** Transport of ash in vehicles or on conveying systems, to include spillage, tracking, or blowing of particulate matter from or by such vehicles or equipment; and **c.** Ash or fuel handling systems and ash disposal areas.	FWTRR-5 FWTRR-6
FWAR-11	**45CSR13 - Permit No. R13-2075C §(A)(8)**	3.1.12	**Fugitive emission controls applicable to paved roads.** All paved roadways or haulways on the premises or serving the permitted facility shall be vacuum swept, at a minimum, once per day that feedstock shall be delivered to the facility or ash removed from the facility, except during times of inclement weather. Berms along these roads or haulways shall be treated with Coherex or Soil-Sement (or a Division of Air Quality-approved equivalent) once per calendar quarter.	FWTRR-5 FWTRR-6

20A. Facility-Wide Applicable Requirements

List all facility-wide applicable requirements. For each applicable requirement, include the rule citation and/or permit with the condition number.

Link From General Form, Item 20	Applicable Requirement Citation	Permit Condition Number from Permit R30-02300014-2005	Requirement Summary	Monitoring / Testing / Recordkeeping / Reporting Requirement Links
FWAR-12	**45CSR13 - Permit No. R13-2075C §(A)(9)**	3.1.13	**Fugitive emission controls applicable to unpaved roads:** a. All unpaved roads, including those used for employee access and/or maintenance operations, within the premises of the permitted facility and within the adjacent fuel disposal area shall be surfaced and maintained with crushed aggregate. b. Unpaved haulroads associated with trucking limestone, fuel coal, propane, and ash haul-out within or upon the premises of the permitted facility shall be treated, at a minimum, once per quarter with properly mixed Coherex, Soil-Sement or a Division of Air Quality-approved equivalent dust suppressants.	FWTRR-5 FWTRR-6
FWAR-13	**45CSR13 - Permit No. R13-2075C §(A)(10)**	3.1.14	**Fugitive emission controls applicable to all haulroads and other work areas where mobile equipment is used.** The permittee shall maintain a water truck on site and in good operating condition, and shall utilize same to apply water as often as is necessary in order to minimize the atmospheric entrainment of fugitive particulate emissions that may be generated from all haulroads and other work areas where mobile equipment is used. The spraybar shall be equipped with commercially available spray nozzles, of sufficient size and number, so as to provide adequate coverage to the area being treated. The pump delivering the water, or solution, shall be of sufficient size and capacity so as to be capable of delivering to the spray nozzle(s) an adequate quantity of water, or solution, and at a sufficient pressure, so as to assure that the treatment process will minimize the atmospheric entrainment of fugitive particulate emissions generated from the haulroads and work areas where mobile equipment is used.	FWTRR-5

20A. Facility-Wide Applicable Requirements

List all facility-wide applicable requirements. For each applicable requirement, include the rule citation and/or permit with the condition number.

Link From General Form, Item 20	Applicable Requirement Citation	Permit Condition Number from Permit R30-02300014-2005	Requirement Summary	Monitoring / Testing / Recordkeeping / Reporting Requirement Links
FWAR-14	45CSR§§37-6.1.b and 20.1., 45CSR§37-23.2., 45CSR§37-24.1	3.1.15	**CAMR Mercury Budget Trading Program.** (after vacature of the Clean Air Mercury Rule, we are uncertain how the state rule will apply).	FWTRR-15
FWAR-15	45CSR§§39-6.1.b and 20.1., 45CSR§39-23.2., 45CSR§39-24.1	3.1.16	**CAIR NO_x Annual Trading Program.** The permittee shall comply with the standard requirements set forth in the attached CAIR Permit Application (see Appendix E) and the CAIR permit requirements set forth in 45CSR39 for each CAIR NO_x Annual source. The complete CAIR Permit Application shall be the CAIR Permit portion of the Title V permit administered in accordance with 45CSR30. a. The CAIR Permit portion of this permit is deemed to incorporate automatically the definitions of terms under 45CSR§39-2 and, upon recordation by the Administrator under sections 51 through 57, or 60 through 62 of 45CSR39, every allocation, transfer, or deduction of a CAIR NO_x Annual allowance to or from the compliance account of the CAIR NO_x Annual source covered by the permit. b. Except as provided in 45CSR§39-23.2, the Secretary will revise the CAIR Permit portion of this permit, as necessary, in accordance with the operating permit revision requirements set forth in 45CSR30.	FWTRR-7 FWTRR-9 FWTRR-11 FWTRR-12

20A. Facility-Wide Applicable Requirements

List all facility-wide applicable requirements. For each applicable requirement, include the rule citation and/or permit with the condition number.

Link From General Form, Item 20	Applicable Requirement Citation	Permit Condition Number from Permit R30-02300014-2005	Requirement Summary	Monitoring / Testing / Recordkeeping / Reporting Requirement Links
FWAR-16	45CSR§§40-6.1.b and 20.1, 45CSR§40-23.2., 45CSR§40-24.1.	3.1.17	**CAIR NO_x Ozone Season Trading Program.** The permittee shall comply with the standard requirements set forth in the attached CAIR Permit Application (see Appendix E) and the CAIR permit requirements set forth in 45CSR40 for each CAIR NO_x Ozone Season source. The complete CAIR Permit Application shall be the CAIR Permit portion of the Title V permit administered in accordance with 45CSR30. a. The CAIR Permit portion of this permit is deemed to incorporate automatically the definitions of terms under 45CSR§40-2 and, upon recordation by the Administrator under 45CSR§40-43.3.c, sections 51 through 57, or 60 through 62 of 45CSR40, every allocation, transfer, or deduction of a CAIR NO_x Ozone Season allowance to or from the compliance account of the CAIR NO_x Ozone Season source covered by the permit. b. Except as provided in 45CSR§40-23.2, the Secretary will revise the CAIR Permit portion of this permit, as necessary, in accordance with the operating permit revision requirements set forth in 45CSR30.	FWTRR-7 FWTRR-9 FWTRR-11 FWTRR-12
FWAR-17	45CSR§§41-6.1.b. and 20.1., 45CSR§41-23.2., 45CSR§41-24.1	3.1.18	**CAIR SO_2Trading Program.** The permittee shall comply with the standard requirements set forth in the attached CAIR Permit Application (see Appendix E) and the CAIR permit requirements set forth in 45CSR41 for each CAIR SO_2 source. The complete CAIR Permit Application shall be the CAIR Permit portion of the Title V permit administered in accordance with 45CSR30. a. The CAIR Permit portion of this permit is deemed to incorporate automatically the definitions of terms under 45CSR§41-2 and, upon recordation by the Administrator under sections 51 through 57, or 60 through 62 of 45CSR41, every allocation, transfer, or deduction of a CAIR SO_2 allowance to or from the compliance account of the CAIR SO_2 source covered by the permit. b. Except as provided in 45CSR§41-23.2, the Secretary will revise the CAIR Permit portion of this permit, as necessary, in accordance with the operating permit revision requirements set forth in 45CSR30.	FWTRR-7 FWTRR-9 FWTRR-11 FWTRR-12

20A. Facility-Wide Applicable Requirements

List all facility-wide applicable requirements. For each applicable requirement, include the rule citation and/or permit with the condition number.

Link From General Form, Item 20	Applicable Requirement Citation	Permit Condition Number from Permit R30-02300014-2005	Requirement Summary	Monitoring / Testing / Recordkeeping / Reporting Requirement Links
FWAR-18	10/03/2003 VEPCO Consent Decree	New	**NEW APPLICABLE REQUIREMENT-** The Consent Decree entered by the United States District Court for the Eastern District of Virginia, Civil Action Nos. 03-CV-517-A and 03-CV-603-A, on October 10, 2003 between Virginia Electric and Power Company and the United States of America, et al. (the "Consent Decree") , as such Consent Decree might be amended or modified from time to time in accordance with its terms, is incorporated in its entirety into this permit by reference and is attached as Appendix ____ to this permit. The permittee's obligations under this permit shall be to comply with the terms and conditions of the Consent Decree that relate to the operation of North Branch Power Station exclusively, and such compliance shall be determined exclusively by reference to the terms and conditions of the Decree. Whenever any conflict or ambiguity arises between the Consent Decree and this permit, the terms and conditions of the Consent Decree control. Compliance with the monitoring, recordkeeping, reporting, testing and compliance certification requirements in the Consent Decre that relate to the operation of North Branch Power station shall be deemed to satisfy the monitoring, recordkeeping, reporting, testing, and compliance certification requirements of this permit arising out of the terms and conditions of the Consent Decree.	FWTRR-15
FWAR-19	Paragraph 78 of 10/03/2003 VEPCO Consent Decree	New	**NEW APPLICABLE REQUIREMENT-** The facility shall operate North Branch Boiler 1A and Boiler 1B baghouse to maximize PM emission reductions through procedures established in this Paragraph: a. Commence operation no later than two hours after commencement of combustion of any amount of coal. b. Continuously operate North Branch Boiler 1A and Boiler 1B bagouses in compliance with manufacturers' specifications, the operational design of the Unit and good engineering practices	FWTRR-15
FWAR-20	Paragraph 79 of 10/03/2003 VEPCO Consent Decree	New	**NEW APPLICABLE REQUIREMENT-** The permittee shall conduct Baghouse Optimization Studies per Paragraph 79 of the Decree by April 21, 2009. (This requirement has already been satisfied and this study was sent to EPA on April 14,2009, please streamline this out of the Title V permit)	FWTRR-15
FWAR-21	Paragraph 80 of 10/03/2003 VEPCO Consent Decree	New	**NEW APPLICABLE REQUIREMENT-** Within 270 days after approval of the Baghouse Optimization Studies by the United States, the permittee shall operate and maintain the baghouses in compliance with the approved Baghouse optimization plan.	FWTRR-15

20A. Facility-Wide Applicable Requirements

List all facility-wide applicable requirements. For each applicable requirement, include the rule citation and/or permit with the condition number.

Link From General Form, Item 20	Applicable Requirement Citation	Permit Condition Number from Permit R30-02300014-2005	Requirement Summary	Monitoring / Testing / Recordkeeping / Reporting Requirement Links
FWAR-22	Paragraph 95 of 10/03/2003 VEPCO Consent Decree	New	**NEW APPLICABLE REQUIREMENT-** Commencing in 2004, the permittee shall conduct a stack test for PM on each boiler stack. The stack test shall be conducted at least once per every four successive "QA Operating Quarters" (as defined in 40 CFR 72.2).	FWTRR-15
FWAR-23	Appendix B III.C.1.a of 10/03/2003 VEPCO Consent Decree	New	**NEW APPLICABLE REQUIREMENT-** The permittee shall report results of the PM stack tests in accordance with "Appendix B Section III.C.1.a – Reporting Requirements."	FWTRR-15
FWAR-24	Paragraph 81 of 10/03/2003 VEPCO Consent Decree	New	**NEW APPLICABLE REQUIREMENT-** PM Emission Rates established under Paragraph 80 of the Decree shall not apply during periods of "startup" and "shutdown" or during periods of control equipment or Unit malfunction. Periods of "startup" shall not exceed two hours after any amount of coal is combusted. Periods of "shutdown" shall only commence when the Unit ceases burning any amount of coal. Coal shall not be deemed to be combusted if it is burned as a result of clearing out a Unit's coal mills as the Unit is returned to service	FWTRR-15
FWAR-25	Paragraph 95 and Appendix B of 10/03/2003 VEPCO Consent Decree	New	**NEW APPLICABLE REQUIREMENT-** The permittee shall submit semi-annual reports required under Appendix B of the Consent Decree, until expiration of the Decree.	FWTRR-15

20B. Facility-Wide Testing, Recordkeeping and Reporting Requirements

For all facility-wide applicable requirements listed above, provide monitoring /testing/recordkeeping/reporting which shall be used to demonstrate compliance. If method is based on a permit or rule, include the condition number and/or citation. (Note: Each requirement listed above must have an associated method of demonstrating compliance. If there is not already a required method in place, then a method must be proposed.)

Link from Table 20A	Applicable Requirement Citation	Permit Condition Number from Permit R30-02300014-2005	Requirement Summary
FWTRR-1	WV Code § 22-5-4(a)(15), 45CSR2, 45CSR13/14	3.3.1	**Testing - Stack testing.** As per provisions set forth in this permit or as otherwise required by the Secretary, in accordance with the West Virginia Code, underlying regulations, permits and orders, conduct test(s) to determine compliance with the emission limitations set forth in this permit and/or established or set forth in underlying documents. The Secretary, or his duly authorized representative, may at his option witness or conduct such test(s). Should the Secretary exercise his option to conduct such test(s), the operator shall provide all necessary sampling connections and sampling ports to be located in such manner as the Secretary may require, power for test equipment and the required safety equipment, such as scaffolding, railings and ladders, to comply with generally accepted good safety practices. Such tests shall be conducted in accordance with the methods and procedures set forth in this permit or as otherwise approved or specified by the Secretary in accordance with the following: **a.** The Secretary may on a source-specific basis approve or specify additional testing or alternative testing to the test methods specified in the permit for demonstrating compliance with 40C.F.R. Parts 60,61, and 63 in accordance with the Secretary's delegated authority and any established equivalency determination methods which are applicable. If a testing method is specified or approved with effectively replaces a test method specified in the permit, the permit will be revised in accordance with 45CSR§30-6.4 or 45CSR§30-6.5 as applicable. **b.** The Secretary may on a source-specific basis approve or specify additional testing or alternative testing to the test methods specified in the permit for demonstrating compliance with applicable requirements which do not involve federal delegation. In specifying or approving such alternative testing to the test methods, the Secretary, to the extent possible, shall utilize the same equivalency criteria as would be used in approving such changes under Section 3.2.1a of this permit. If a testing method is specified or approved which effectively replaces a test method specified in the permit, the permit will be revised in accordance with 45CSR§30-6.4 or 45CSR§30-6.5 as applicable. **c.** All periodic tests to determine mass emission limits from or air pollutant concentrations in discharge stacks and such other tests as specified in this permit shall be conducted in accordance with an approved test protocol. Unless previously approved, such protocols shall be submitted to the Secretary. In addition, the permittee shall notify the Secretary at least fifteen (15) days prior to any testing so the Secretary may have the opportunity to observe such tests. This notification shall include the actual date and time during which the test will be conducted and, if appropriate, verification that the tests will fully conform to a referenced protocol previously approved by the Secretary.

20B. Facility-Wide Testing, Recordkeeping and Reporting Requirements

For all facility-wide applicable requirements listed above, provide monitoring /testing/recordkeeping/reporting which shall be used to demonstrate compliance. If method is based on a permit or rule, include the condition number and/or citation. (Note: Each requirement listed above must have an associated method of demonstrating compliance. If there is not already a required method in place, then a method must be proposed.)

Link from Table 20A	Applicable Requirement Citation	Permit Condition Number from Permit R30-02300014-2005	Requirement Summary
FWTRR-2	45CSR§30.5.1.c.2.A	3.4.1	**Recordkeeping - Monitoring information.** The permittee shall keep records of monitoring information that include the following: **a.** The date, place as defined in this permit and time of sampling or measurements; **b.** The date(s) analyses were performed; **c.** The company or entity that performed the analyses; **d.** The analytical techniques or methods used; **e.** The results of the analyses; and **f.** The operating conditions existing at the time of sampling or measurement.
FWTRR-3	45CSR§30-5.1.c.2.B	3.4.2	**Recordkeeping - Retention of records.** Retain records of all required monitoring data and support information for a period of at least five (5) years from the date of monitoring sample, measurement, report, application, or record creation date. Support information includes all calibration and maintenance records and all original strip-chart recordings for continuous monitoring instrumentation, and copies of all reports required by the permit. Where appropriate, records may be maintained in computerized form in lieu of the above records.
FWTRR-4	45CSR§30-5.1.c State-Enforceable only	3.4.3	**Recordkeeping - Odors.** For the purposes of 45CSR4, maintain a record of all odor complaints received. Such record shall contain an assessment of the validity of the complaints as well as any corrective actions taken.

20B. Facility-Wide Testing, Recordkeeping and Reporting Requirements

For all facility-wide applicable requirements listed above, provide monitoring /testing/recordkeeping/reporting which shall be used to demonstrate compliance. If method is based on a permit or rule, include the condition number and/or citation. (Note: Each requirement listed above must have an associated method of demonstrating compliance. If there is not already a required method in place, then a method must be proposed.)

Link from Table 20A	Applicable Requirement Citation	Permit Condition Number from Permit R30-02300014-2005	Requirement Summary
FWTRR-5	45CSR§30-5.1.c	3.4.4	**Recordkeeping – Dust Control.** The permittee shall maintain records indicating the use of any dust suppressants or any other suitable dust control measures applied at the facility. The permittee shall also inspect all fugitive dust control systems weekly from May 1 through September 30 and monthly from October 1 through April 30 to ensure that they are operated and maintained in conformance with their designs. The permittee shall maintain records of all scheduled and non-scheduled maintenance and shall state any maintenance or corrective actions taken as a result of the weekly and/or monthly inspections, the times the fugitive dust control system(s) were inoperable and any corrective actions taken.
FWTRR-6	45CSR13 - Permit No. R13-2075C §(B)(5)	3.4.5	**Recordkeeping-** For the purposes of determining compliance with conditions 3.1.12., 3.1.13. and 3.1.14, certified daily and monthly records of haulroad treatments shall be maintained. Such records shall be retained by the permittee for at least five (5) years. Certified records shall be made available to the Director or his/her duly authorized representative upon request.
FWTRR-7	45CSR§§30-4.4. *and* 5.1.c.3.D	3.5.1	**Reporting - Responsible official.** Any application form, report, or compliance certification required by this permit to be submitted to the DAQ and/or USEPA shall contain a certification by the responsible official that states that, based on information and belief formed after reasonable inquiry, the statements and information in the document are true, accurate and complete
FWTRR-8	45CSR§30-5.1.c.3.E	3.5.2	**Reporting - Confidential Information.** A permittee shall request confidential treatment for the submission of reporting required under 45CSR§30-5.1.c.3. pursuant to the limitations and procedures of W.Va. Code § 22-5-10 and 45CSR31.

20B. Facility-Wide Testing, Recordkeeping and Reporting Requirements

For all facility-wide applicable requirements listed above, provide monitoring /testing/recordkeeping/reporting which shall be used to demonstrate compliance. If method is based on a permit or rule, include the condition number and/or citation. (Note: Each requirement listed above must have an associated method of demonstrating compliance. If there is not already a required method in place, then a method must be proposed.)

Link from Table 20A	Applicable Requirement Citation	Permit Condition Number from Permit R30-02300014-2005	Requirement Summary
FWTRR-9	None	3.5.3	**Reporting – Delivery Addresses.** All notices, requests, demands, submissions and other communications required or permitted to be made to the Secretary of DEP and/or USEPA shall be made in writing and shall be deemed to have been duly given when delivered by hand, or mailed first class with postage prepaid to the address(es) set forth below or to such other person or address as the Secretary of the Department of Environmental Protection may designate: **If to the DAQ:** Director WVDEP Division of Air Quality 601 57th Street SE Charleston, WV 25304-2943 Phone: 304/926-0475 FAX: 304/926-0479 **If to the US EPA:** Associate Director Office of Enforcement and Permits Review (3AP12) U. S. Environmental Protection Agency Region III 1650 Arch Street Philadelphia, PA 19103-2029
FWTRR-10	45CSR§30-8	3.5.4	**Reporting - Certified emissions statement.** The permittee shall submit a certified emissions statement and pay fees on an annual basis in accordance with the submittal requirements of the Division of Air Quality. A receipt for the appropriate fee shall be maintained on the premises for which the receipt has been issued, and shall be made immediately available for inspection by the Secretary or his/her duly authorized representative.
FWTRR-11	45CSR§30-5.3.e	3.5.5	**Reporting - Compliance certification.** The permittee shall certify compliance with the conditions of this permit on the forms provided by the DAQ. In addition to the annual compliance certification, the permittee may be required to submit certifications more frequently if required under an applicable requirement of this permit. The annual certification shall be submitted to the DAQ and USEPA on or before March 15 of each year, and shall certify compliance for the period ending December 31. The permittee shall maintain a copy of the certification on site for five (5) years from submittal of the certification.

20B. Facility-Wide Testing, Recordkeeping and Reporting Requirements

For all facility-wide applicable requirements listed above, provide monitoring /testing/recordkeeping/reporting which shall be used to demonstrate compliance. If method is based on a permit or rule, include the condition number and/or citation. (Note: Each requirement listed above must have an associated method of demonstrating compliance. If there is not already a required method in place, then a method must be proposed.)

Link from Table 20A	Applicable Requirement Citation	Permit Condition Number from Permit R30-02300014-2005	Requirement Summary
FWTRR-12	45CSR§30-5.1.c.3.A	3.5.6	**Reporting - Semi-annual monitoring reports.** The permittee shall submit reports of any required monitoring on September 15 for the reporting period January 1 to June 30 and March 15 for the reporting period July 1 to December 31. All instances of deviation from permit requirements must be clearly identified in such reports. All required reports must be certified by a responsible official consistent with 45CSR§30-4.4.
FWTRR-13	45CSR§30-5.7	3.5.7	**Recordkeeping and Reporting - Emergency.** An "emergency" means any situation arising from sudden and reasonably unforeseeable events beyond the control of the source, including acts of God, which situation requires immediate corrective action to restore normal operation, and that causes the source to exceed a technology-based emission limitation under the permit, due to unavoidable increases in emissions attributable to the emergency. An emergency shall not include noncompliance to the extent caused by improperly designed equipment, lack of preventative maintenance, careless or improper operation, or operator error. An emergency constitutes an affirmative defense to an action brought for noncompliance with such technology-based emission limitations if the conditions of 45CSR§30-5.7.c. are met. The affirmative defense of emergency shall be demonstrated through properly signed, contemporaneous operating logs, or other relevant evidence that: **a.** An emergency occurred and that the permittee can identify the cause(s) of the emergency; **b.** The permitted facility was at the time being properly operated; **c.** During the period of the emergency the permittee took all reasonable steps to minimize levels of emissions that exceeded the emission standards, or other requirements in the permit; and **d.** Subject to the requirements of 45CSR§30-5.1.c.3.C.1, the permittee submitted notice of the emergency to the Secretary within one (1) working day of the time when emission limitations were exceeded due to the emergency and made a request for variance, and as applicable rules provide. This notice, report, and variance request fulfills the requirement of 45CSR§30-5.1.c.3.B. This notice must contain a detailed description of the emergency, any steps taken to mitigate emissions, and corrective actions taken.

20B. Facility-Wide Testing, Recordkeeping and Reporting Requirements

For all facility-wide applicable requirements listed above, provide monitoring /testing/recordkeeping/reporting which shall be used to demonstrate compliance. If method is based on a permit or rule, include the condition number and/or citation. (Note: Each requirement listed above must have an associated method of demonstrating compliance. If there is not already a required method in place, then a method must be proposed.)

Link from Table 20A	Applicable Requirement Citation	Permit Condition Number from Permit R30-02300014-2005	Requirement Summary
FWTRR-14	45CSR§30-5.1.c.3.C	3.5.8	**Reporting – Deviations** In addition to monitoring reports required by this permit, promptly submit supplemental reports and notices in accordance with the following: **1.** Any deviation resulting from an emergency or upset condition, as defined 45CSR§30-5.7., shall be reported by telephone or telefax within one (1) working day of the date on which the permittee becomes aware of the deviation, if the permittee desires to assert the affirmative defense in accordance with 45CSR§30-5.7. A written report of such deviation, which shall include the probable cause of such deviations, and any corrective actions or preventative measures taken, shall be submitted and certified by a responsible official within ten (10) days of the deviation. **2.** Any deviation that poses an imminent and substantial danger to public health, safety, or the environment shall be reported to the Secretary immediately by telephone or telefax. A written report of such deviation, which shall include the probable cause of such deviation, and any corrective actions or preventative measures taken, shall be submitted by the responsible official within ten (10) days of the deviation. **3.** Deviations for which more frequent reporting is required under this permit shall be reported on the more frequent basis. **4.** All reports of deviations shall identify the probable cause of the deviation and any corrective actions or preventative measures taken. In the reporting of deviations from permit requirements, including those attributable to upset conditions as defined in this permit, report the probable cause of such deviations and any corrective actions or preventive measures taken in accordance with any rules of the Secretary. Every report submitted under this subsection shall be certified by a responsible official.
FWTRR-15	45CSR§30-4.3.h.1.B	3.5.9	**New applicable requirements.** If any applicable requirement is promulgated during the term of this permit, the permittee will meet such requirements on a timely basis, or in accordance with a more detailed schedule if required by the applicable requirement.
FWTRR-16	45CSR§30-5.6	3.7.1	**Permit Shield.** The permittee is hereby granted a permit shield in accordance with 45CSR§30-5.6. The permit shield applies provided the permittee operates in accordance with the information contained within this permit.

20B. Facility-Wide Testing, Recordkeeping and Reporting Requirements

For all facility-wide applicable requirements listed above, provide monitoring /testing/recordkeeping/reporting which shall be used to demonstrate compliance. If method is based on a permit or rule, include the condition number and/or citation. (Note: Each requirement listed above must have an associated method of demonstrating compliance. If there is not already a required method in place, then a method must be proposed.)

Link from Table 20A	Applicable Requirement Citation	Permit Condition Number from Permit R30-02300014-2005	Requirement Summary
FWTRR-17	None	3.7.2	The following requirements specifically identified are not applicable to the source based on the determinations set forth below. The permit shield shall apply to the following requirements provided the conditions of the determinations are met. 40 CFR 60 Subpart D 40 CFR 60 Subpart Da Applies to this facility 40 CFR 60 Subpart Db 40 CFR 60 Subpart Dc 40 CFR 60 Subpart K The facility does not include storage vessels that are used to store petroleum liquids (as defined in 40 CFR 60 Subpart 60.111(b)) which construction, reconstruction, or modification commenced prior to July 23, 1984. 40 CFR 60 Subpart Ka The facility does not include storage vessels that are used to store petroleum liquids (as defined in 40 CFR 60.111a(b)) which construction, reconstruction, or modification commenced prior to July 23, 1984. 40 CFR 60 Subpart Kb Storage vessels potentially affected by this subpart (except for the propane storage vessels) have a storage capacity of less than 75 cubic meters and therefore are not subject to this subpart. The propane storage vessels (*T-PR-1, -2, -3, -4, -5, -6*) are designed to operate in excess of 204.9 kPa without emissions to the atmosphere and therefore are not subject to this subpart. 40 CFR 60 Subpart GG The facility does not have any stationary gas turbines 40 CFR 68 The facility does not have materials subject to this requirement 40 CFR 82 Subpart B The facility does not conduct motor vehicle maintenance involving CFCs on site.

21. Active Permits/Consent Orders		
Permit or Consent Order Number	Date of Issuance MM/DD/YYYY	List any Permit Determinations that Affect the Permit *(if any)*
R13-1020B/R14-04B	June 9, 1993	Original permit issued November 9, 1988, Superceded and Replaced October 14, 1992 and June 9, 1993; R13-2075C is applicable in conjunction with this permit.
R13-2075C	May 9, 2002	Original permit issued May 3, 1999, Superceded and Replaced December 5, 2000, February 8, 2001 and May, 9, 2002. (Supercedes SPECIFIC REQUIREMENTS A.7 and A.8 within R14-04B and is applicable in conjunction with R14-04B)
Acid Rain Permit	December 18, 2007	Effective January 1, 2008
NO_x Budget Permit – CFB Boilers 1A & 1B	February 7 2002	Incorporated in to Title V permit
Consent Decree: No. 03-CV-517A (US vs. VEPCO)	10/03/2003	
	/ /	
	/ /	
	/ /	
	/ /	
	/ /	
	/ /	
	/ /	
	/ /	
	/ /	
	/ /	

22. Inactive Permits/Obsolete Permit Conditions		
Permit Number	Date of Issuance	Permit Condition Number
WVDAQ Consent Order: No. CO-R2-E-2002-17 (State-Enforceable Only)	May 24, 2002	Requires the development of a "Monitoring Plan" and "Inspection and Maintenance Plan" For the boiler particulate matter removal system. It also requires that theses plans be incorporated into the Title V permit
	/ /	
	/ /	
	/ /	
	/ /	
	/ /	
	/ /	
	/ /	
	/ /	
	/ /	
	/ /	
	/ /	
	/ /	
	/ /	
	/ /	
	/ /	
	/ /	
	/ /	
	/ /	
	/ /	
	/ /	
	/ /	
	/ /	

Section 3: Facility-Wide Emissions

23. Facility-Wide Emissions Summary [Tons per Year]	
Criteria Pollutants	Potential Emissions
Carbon Monoxide (CO)	899
Nitrogen Oxides (NO_X)	2100
Lead (Pb)	0.04
Particulate Matter ($PM_{2.5}$)[1]	**
Particulate Matter (PM_{10})[1]	**
Total Particulate Matter (TSP)	336.13
Sulfur Dioxide (SO_2)	3,548
Volatile Organic Compounds (VOC)	26.4
Hazardous Air Pollutants[2]	Potential Emissions
Manganese	0.0197
Mercury	0.090
Beryllium	0.001
Fluoride	3.0
Regulated Pollutants other than Criteria and HAP	Potential Emissions

[1]$PM_{2.5}$ and PM_{10} are components of TSP.
[2]For HAPs that are also considered PM or VOCs, emissions should be included in both the HAPs section and the Criteria Pollutants section.

***$PM_{2.5}$ and PM_{10} are included in Total Particulate Matter(TSP)*

Section 4: Insignificant Activities

24. Insignificant Activities (Check all that apply)		
☒	1.	Air compressors and pneumatically operated equipment, including hand tools.
☒	2.	Air contaminant detectors or recorders, combustion controllers or shutoffs.
☒	3.	Any consumer product used in the same manner as in normal consumer use, provided the use results in a duration and frequency of exposure which are not greater than those experienced by consumer, and which may include, but not be limited to, personal use items; janitorial cleaning supplies, office supplies and supplies to maintain copying equipment.
☒	4.	Bathroom/toilet vent emissions.
☒	5.	Batteries and battery charging stations, except at battery manufacturing plants.
☒	6.	Bench-scale laboratory equipment used for physical or chemical analysis, but not lab fume hoods or vents. Many lab fume hoods or vents might qualify for treatment as insignificant (depending on the applicable SIP) or be grouped together for purposes of description.
☐	7.	Blacksmith forges.
☒	8.	Boiler water treatment operations, not including cooling towers.
☒	9.	Brazing, soldering or welding equipment used as an auxiliary to the principal equipment at the source.
☐	10.	CO_2 lasers, used only on metals and other materials which do not emit HAP in the process.
☒	11.	Combustion emissions from propulsion of mobile sources, except for vessel emissions from Outer Continental Shelf sources.
☒	12.	Combustion units designed and used exclusively for comfort heating that use liquid petroleum gas or natural gas as fuel.
☒	13.	Comfort air conditioning or ventilation systems not used to remove air contaminants generated by or released from specific units of equipment.
☒	14.	Demineralized water tanks and demineralizer vents.
☒	15.	Drop hammers or hydraulic presses for forging or metalworking.
☒	16.	Electric or steam-heated drying ovens and autoclaves, but not the emissions from the articles or substances being processed in the ovens or autoclaves or the boilers delivering the steam.
☐	17.	Emergency (backup) electrical generators at residential locations.
☒	18.	Emergency road flares.
☐	19.	Emission units which do not have any applicable requirements and which emit criteria pollutants (CO, NO_x, SO_2, VOC and PM) into the atmosphere at a rate of less than 1 pound per hour and less than 10,000 pounds per year aggregate total for each criteria pollutant from all emission units. Please specify all emission units for which this exemption applies along with the quantity of criteria pollutants emitted on an hourly and annual basis: _____ _____ _____ _____ _____ _____ _____ _____ _____

24. Insignificant Activities (Check all that apply)		
☐	20.	Emission units which do not have any applicable requirements and which emit hazardous air pollutants into the atmosphere at a rate of less than 0.1 pounds per hour and less than 1,000 pounds per year aggregate total for all HAPs from all emission sources. This limitation cannot be used for any source which emits dioxin/furans nor for toxic air pollutants as per 45CSR27. Please specify all emission units for which this exemption applies along with the quantity of hazardous air pollutants emitted on an hourly and annual basis: _____ _____ _____ _____ _____
☐	21.	Environmental chambers not using hazardous air pollutant (HAP) gases.
☐	22.	Equipment on the premises of industrial and manufacturing operations used solely for the purpose of preparing food for human consumption.
☐	23.	Equipment used exclusively to slaughter animals, but not including other equipment at slaughterhouses, such as rendering cookers, boilers, heating plants, incinerators, and electrical power generating equipment.
☒	24.	Equipment used for quality control/assurance or inspection purposes, including sampling equipment used to withdraw materials for analysis.
☒	25.	Equipment used for surface coating, painting, dipping or spray operations, except those that will emit VOC or HAP.
☒	26.	Fire suppression systems.
☒	27.	Firefighting equipment and the equipment used to train firefighters.
☒	28.	Flares used solely to indicate danger to the public.
☒	29.	Fugitive emission related to movement of passenger vehicle provided the emissions are not counted for applicability purposes and any required fugitive dust control plan or its equivalent is submitted.
☐	30.	Hand-held applicator equipment for hot melt adhesives with no VOC in the adhesive formulation.
☒	31.	Hand-held equipment for buffing, polishing, cutting, drilling, sawing, grinding, turning or machining wood, metal or plastic.
☐	32.	Humidity chambers.
☐	33.	Hydraulic and hydrostatic testing equipment.
☒	34.	Indoor or outdoor kerosene heaters.
☒	35.	Internal combustion engines used for landscaping purposes.
☐	36.	Laser trimmers using dust collection to prevent fugitive emissions.
☐	37.	Laundry activities, except for dry-cleaning and steam boilers.
☐	38.	Natural gas pressure regulator vents, excluding venting at oil and gas production facilities.
☒	39.	Oxygen scavenging (de-aeration) of water.
☐	40.	Ozone generators.
☒	41.	Plant maintenance and upkeep activities (e.g., grounds-keeping, general repairs, cleaning, painting, welding, plumbing, re-tarring roofs, installing insulation, and paving parking lots) provided these activities are not conducted as part of a manufacturing process, are not related to the source's primary business activity, and not otherwise triggering a permit modification. (Cleaning and painting activities qualify if they are not subject to VOC or HAP control requirements. Asphalt batch plant owners/operators must still get a permit if otherwise requested.)
☒	42.	Portable electrical generators that can be moved by hand from one location to another. "Moved by

24. Insignificant Activities (Check all that apply)		
		Hand" means that it can be moved without the assistance of any motorized or non-motorized vehicle, conveyance, or device.
☒	43.	Process water filtration systems and demineralizers.
☒	44.	Repair or maintenance shop activities not related to the source's primary business activity, not including emissions from surface coating or de-greasing (solvent metal cleaning) activities, and not otherwise triggering a permit modification.
☒	45.	Repairs or maintenance where no structural repairs are made and where no new air pollutant emitting facilities are installed or modified.
☒	46.	Routing calibration and maintenance of laboratory equipment or other analytical instruments.
☐	47.	Salt baths using nonvolatile salts that do not result in emissions of any regulated air pollutants. Shock chambers.
☐	48.	Shock chambers.
☐	49.	Solar simulators.
☒	50.	Space heaters operating by direct heat transfer.
☒	51.	Steam cleaning operations.
☒	52.	Steam leaks.
☐	53.	Steam sterilizers.
☒	54.	Steam vents and safety relief valves.
☒	55.	Storage tanks, reservoirs, and pumping and handling equipment of any size containing soaps, vegetable oil, grease, animal fat, and nonvolatile aqueous salt solutions, provided appropriate lids and covers are utilized.
☒	56.	Storage tanks, vessels, and containers holding or storing liquid substances that will not emit any VOC or HAP. Exemptions for storage tanks containing petroleum liquids or other volatile organic liquids should be based on size limits such as storage tank capacity and vapor pressure of liquids stored and are not appropriate for this list.
☐	57.	Such other sources or activities as the Director may determine.
☐	58.	Tobacco smoking rooms and areas.
☒	59.	Vents from continuous emissions monitors and other analyzers.

Section 5: Emission Units, Control Devices, and Emission Points

25. Equipment Table
Fill out the **Title V Equipment Table** and provide it as **ATTACHMENT D**.
26. Emission Units
For each emission unit listed in the **Title V Equipment Table**, fill out and provide an **Emission Unit Form** as **ATTACHMENT E**.
For each emission unit not in compliance with an applicable requirement, fill out a **Schedule of Compliance Form** as **ATTACHMENT F**.
27. Control Devices
For each control device listed in the **Title V Equipment Table**, fill out and provide an **Air Pollution Control Device Form** as **ATTACHMENT G**.
For any control device that is required on an emission unit in order to meet a standard or limitation for which the potential pre-control device emissions of an applicable regulated air pollutant is greater than or equal to the Title V Major Source Threshold Level, refer to the **Compliance Assurance Monitoring (CAM) Form(s)** for CAM applicability. Fill out and provide these forms, if applicable, for each Pollutant Specific Emission Unit (PSEU) as **ATTACHMENT H**.

Section 6: Certification of Information

28. Certification of Truth, Accuracy and Completeness and Certification of Compliance

*Note: This Certification must be signed by a responsible official. The **original**, signed in **blue ink**, must be submitted with the application. Applications without an **original** signed certification will be considered as incomplete.*

a. Certification of Truth, Accuracy and Completeness

I certify that I am a responsible official (as defined at 45CSR§30-2.38) and am accordingly authorized to make this submission on behalf of the owners or operators of the source described in this document and its attachments. I certify under penalty of law that I have personally examined and am familiar with the statements and information submitted in this document and all its attachments. Based on my inquiry of those individuals with primary responsibility for obtaining the information, I certify that the statements and information are to the best of my knowledge and belief true, accurate, and complete. I am aware that there are significant penalties for submitting false statements and information or omitting required statements and information, including the possibility of fine and/or imprisonment.

b. Compliance Certification

Except for requirements identified in the Title V Application for which compliance is not achieved, I, the undersigned hereby certify that, based on information and belief formed after reasonable inquiry, all air contaminant sources identified in this application are in compliance with all applicable requirements.

Responsible official (type or print)	
Name: Roger Shears	Title: Director, Fossil & Hydro

Responsible official's signature:

Signature: _____ Signature Date: 8-27-09

(Must be signed and dated in blue ink)

Note: Please check all applicable attachments included with this permit application:	
☒	ATTACHMENT A: Area Map
☒	ATTACHMENT B: Plot Plan(s)
☒	ATTACHMENT C: Process Flow Diagram(s)
☒	ATTACHMENT D: Equipment Table
☒	ATTACHMENT E: Emission Unit Form(s)
☐	ATTACHMENT F: Schedule of Compliance Form(s)
☒	ATTACHMENT G: Air Pollution Control Device Form(s)
☒	ATTACHMENT H: Compliance Assurance Monitoring (CAM) Form(s)

All of the required forms and additional information can be found and downloaded from, the DEP website at www.wvdep.org/daq, requested by phone (304) 926-0475, and/or obtained through the mail.

ATTACHMENT A
FACILITY AREA MAP

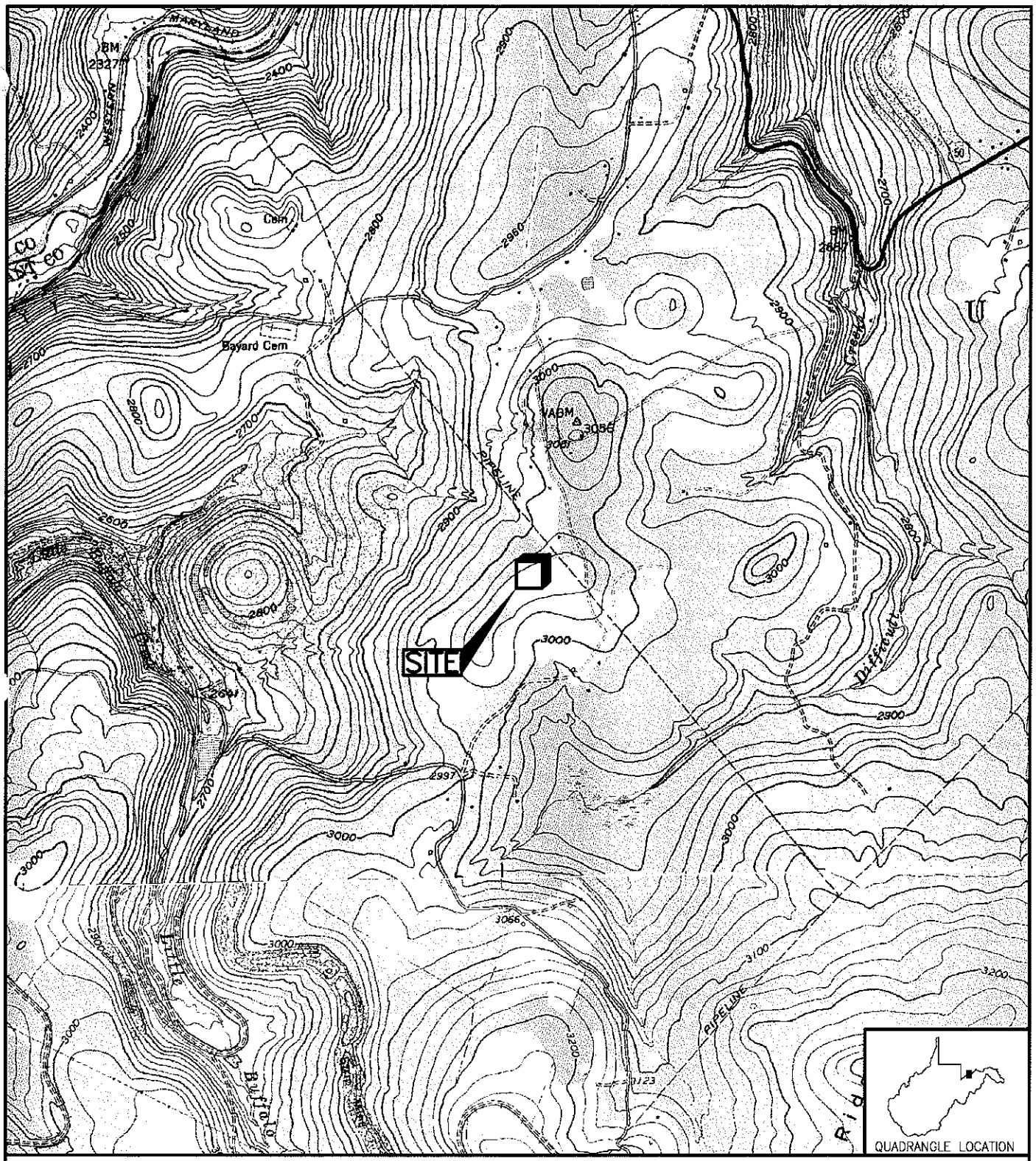

REFERENCE: USGS 7.5' QUADRANGLE MAP OF: GORMAN, WEST VIRGINIA; DATED 1949, PHOTOREVISED 1981.

DRAWN BY	DJF
DATE	
CHECKED BY	
SET JOB NO.	206095
SET DWG FILE	NORTH_BRANCHm01.dwg
DRAWING SCALE	1"=2000'

SE TECHNOLOGIES
98 Vanadium Road Bridgeville, PA 15017 (412) 221-1100

DOMINION GENERATION

NORTH BRANCH POWER STATION
GORMANIA, WEST VIRGINIA
SITE LOCATION MAP

DRAWING NO. FIGURE 1

REV. 0

Plot: env045 03/01/2007 11:19 G:\DOMINION\206095\NORTH_BRANCHm01.dwg

ATTACHMENT B
FACILITY PLOT PLAN

LEGEND

1. A BOILER
2. B BOILER
3. BN-MH-2A, BN-MH-2B, FUEL HOPPERS
4. 1A CONVEYOR
5. CP-1 CONVEYOR
6. CP-1, CP-2, CP-3, CP-4 CONVEYOR
7. P-1 FUEL STORAGE PILE
8. 4S FUEL SCREENING BUILDING
9. VS-MH-1 VIBRATING SCREEN
10. 1C CONVEYOR
11. 1D CONVEYOR
12. 1E CONVEYOR
13. SILO 6A & SILO 6B
14. 1F CONVEYOR
15. 5S CRUSHER BUILDING
16. CR-MH-2A, CR-MH-2B, CR-MH-2C
17. CV-MH-16 CONVEYOR
18. CV-MH-1H, CV-MH-1J, CV-MH-1K
19. BN-MH-1A1 / BN-MH-1A2 FUEL BUNKERS
20. BN-MH-1B1 / BN-MH-1B2 FUEL BUNKERS
21. BN-LH-1A / BN-LH-1B LIMESTONE & FUEL HOPPERS
22. 1M CONVEYOR
23. CR-LH-1A LIMESTONE IMPACTOR 1
24. CV-LH-1N CONVEYOR
25. BN-LH-2 UNCRUSHED LIMESTONE BIN
26. CR-LH-2A1 DFM
27. CR-LH-2B LIMESTONE CRUSHER
28. BN-LH-3 CRUSHED LIMESTONE SILO
29. F-AH-2A / F-AH-2B ASH SEPARATORS
30. BN-AH-3 ASH SILO
31. 11S PAVED ROADS
32. 17S TRUCK LOADING
33. EG-1 DIESEL GENERATOR
34. 1-EG-GEN-2 PROPANE GENERATOR
35. 1-EG-GEN-3 PROPANE GENERATOR
36. P-FP-2 DIESEL FIRE PUMP
37. ME-CA-1 PORTABLE DIESEL AIR COMPRESSOR
38. PK-PR-1 PROPANE VAPORIZER
39. T-MH-4 GLYCOL TANK
40. T-MH-1 DIESEL TANK
41. T-DS-2 DIESEL TANK
42. T-PT-3 DIESEL TANK
43. T-EG-1 DIESEL TANK (EMERGENCY GENERATOR)
44. T-MH-3 KEROSENE TANK
45. T-MH-5 KEROSENE TANK (INACTIVE)
46. T-PT-1 KEROSENE TANK
47. T-PT-2 KEROSENE TANK
48. T-MH-2 GASOLINE TANK
49. T-LO-3 LUBE OIL TANK
50. T-LO-1 LUBE OIL TANK
51. T-PR-1 / T-PR-2 / T-PR-3 / T-PR-4 T-PR-5 / T-PR-6, PROPANE TANKS

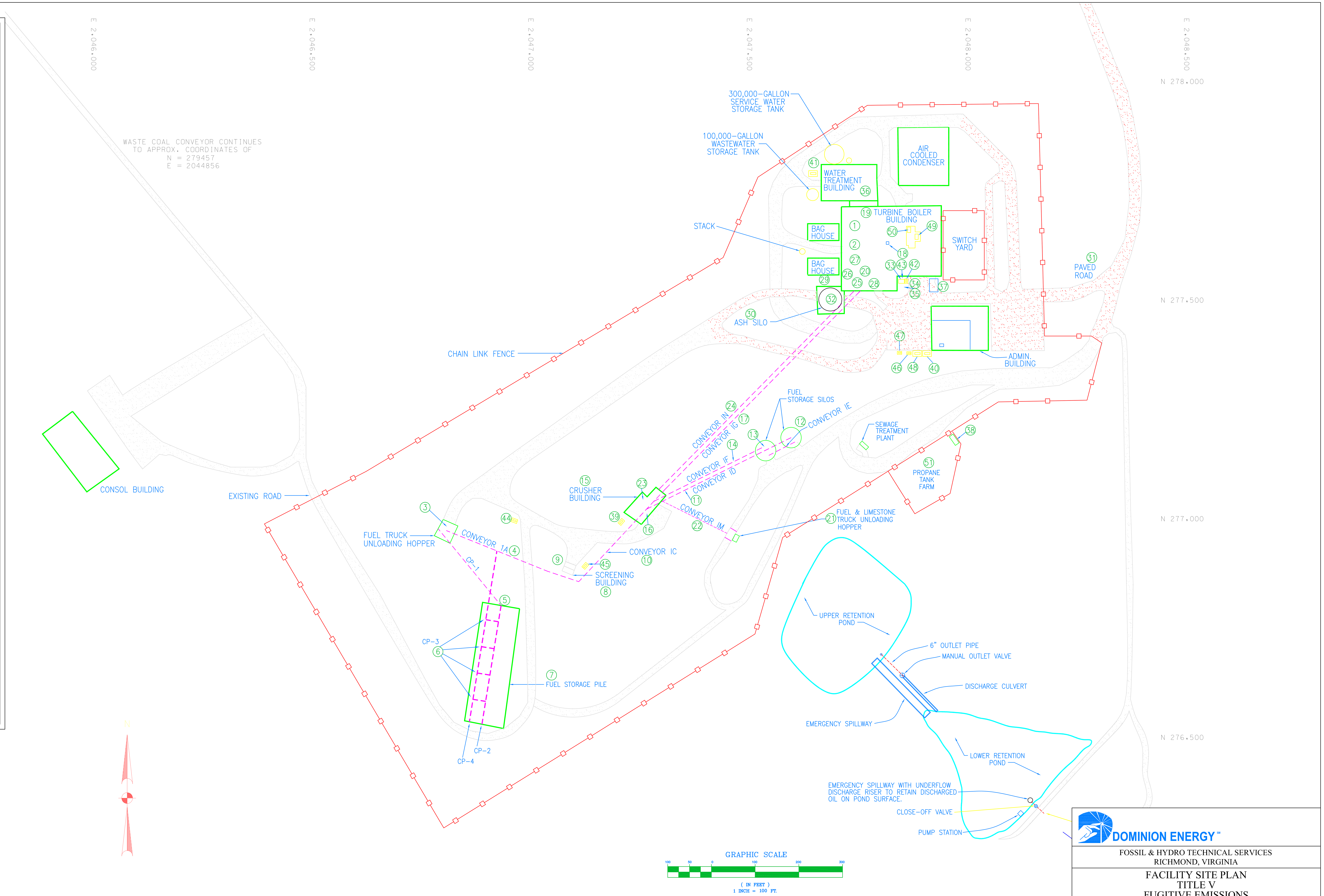

REV	DESCRIPTION	DATE	DSGN	DRWN	CHKD
1	ADDED REFERENCE COORDINATES AND ELEVATIONS	08/07 2009	-	SWC	EAW
0	ORIGINAL ISSUE PER STATION REDLINE.	4/25 2005	-	-	-

REV | DATE | DSGN | DRWN | CHKD | DSGN SUPV | PROJ ENGR | CIVIL ENGR | ELEC ENGR | MECH ENGR | ARCH | E.M. ENGR | I&C ENGR

DOMINION ENERGY™

FOSSIL & HYDRO TECHNICAL SERVICES
RICHMOND, VIRGINIA

FACILITY SITE PLAN
TITLE V
FUGITIVE EMISSIONS
NORTH BRANCH POWER STATION

DSGN KRM	DSGN SUPV RWM				
DRWN KTC	ENGR SUPV -	DRAWING NUMBER	NB-0-SP-STA-001	REV.	1
CHKD RWM	PROJ ENGR -				
DISPL ENGR -	SCALE: 1"=100'	UNLESS OTHERWISE NOTED		SH 1 OF 1	

ATTACHMENT C
PROCESS FLOW DIAGRAMS

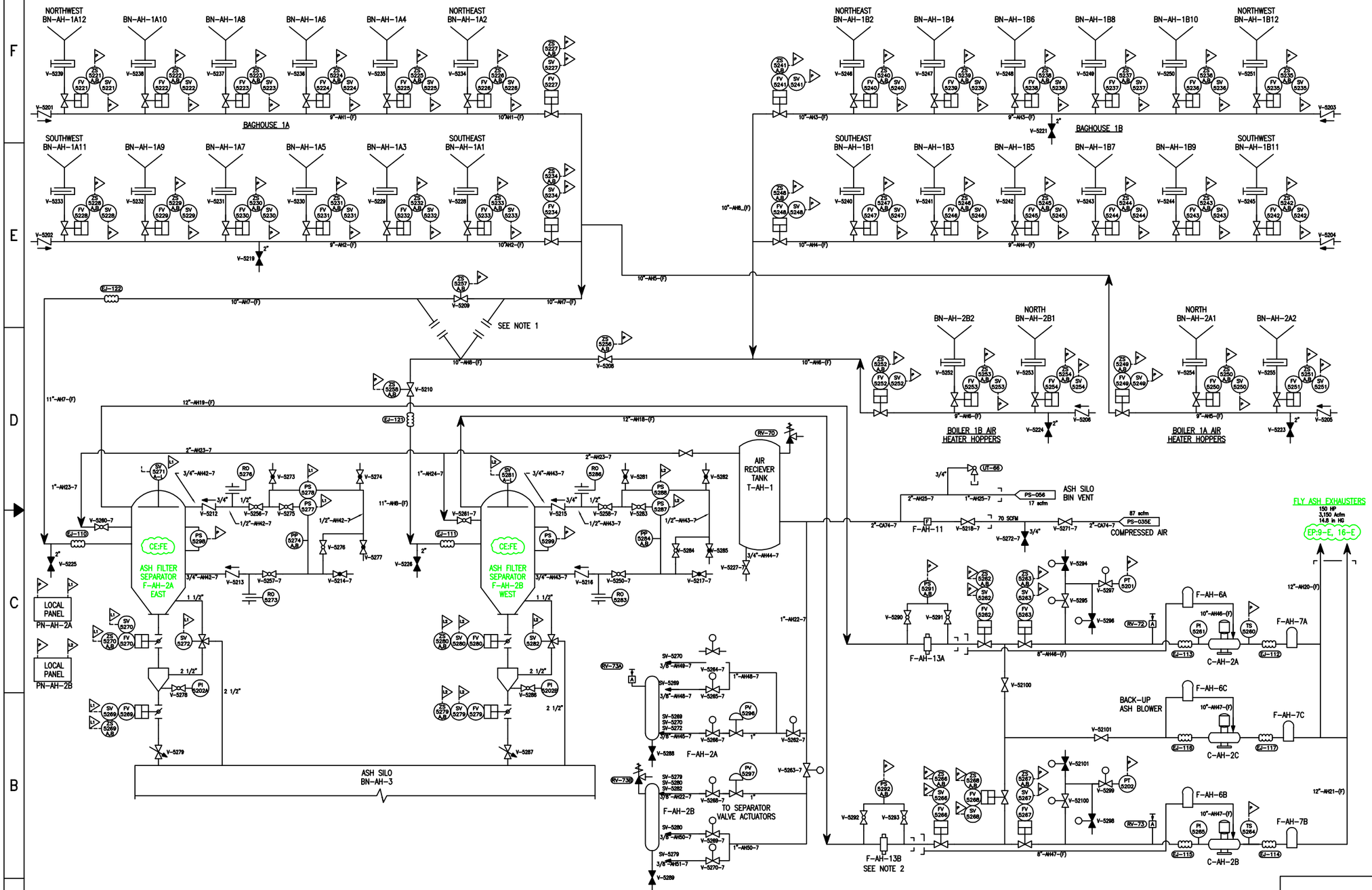

NOTES:

1. V-5206, V-5209, V-5210 SHOULD BE REMOVED
2. PS-5291A/B AND PS-5292A/B ARE NOT IN USE.
3. ALL IDENTIFICATION TAGS IN FIELD PREFIXED WITH "AH" ALPHA DESIGNATOR.
4. LAST INSTRUMENT NUMBER USED: 5202/5299. LAST LIN NUMBER USED: AH61. LAST VALVE NUMBER USED: 52101.

LEGEND:

EP EMISSION POINT
CE CONTROL EQUIPMENT
FE FULL ENCLOSURE

CONTROLLED DRAWING
ANY CHANGES MADE TO THIS SYSTEM SHALL BE DOCUMENTED AS NOTED IN FOSSIL AND HYDRO CONTROLS MANUAL SECTION 6.3.

VIRGINIA POWER
NORTH CAROLINA POWER

NORTH BRANCH POWER PLANT
Grant County, West Virginia

FLOW DIAGRAM
ASH HANDLING
NORTH BRANCH POWER STATION

DSGN	DSGN SUPV	DSPL ENGR	
DRWN SHS	ENGR SUPV	DRAWING NO. 88-92-1-PS-052	REV. 7
CHKD	PROJ ENGR	SCALE	SH 1 OF 1

7	REVISED PER ENVIRONMENTAL REDLINE.	07-29-09 TMD RWM EAW
6	REDRAWN TO SHOW AS-BUILT CONDITIONS PER STATION MARK-UPS.	10-30-03

ATTACHMENT D
EMISSION UNIT TABLES

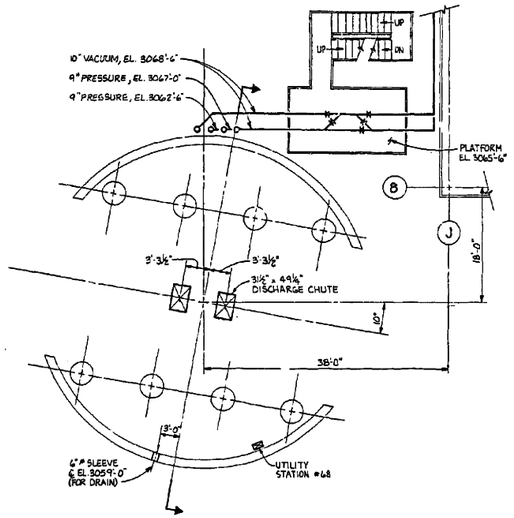

GROUND FLOOR PLAN EL. 3048'-10 3/4"

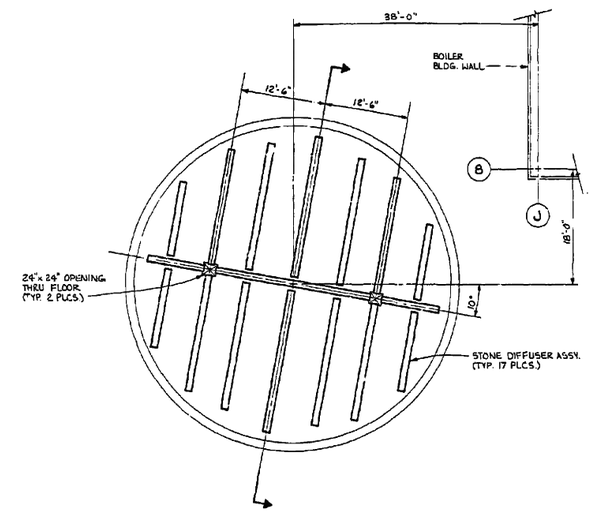

SILO BIN FLOOR PLAN EL. 3092'-8 3/4"

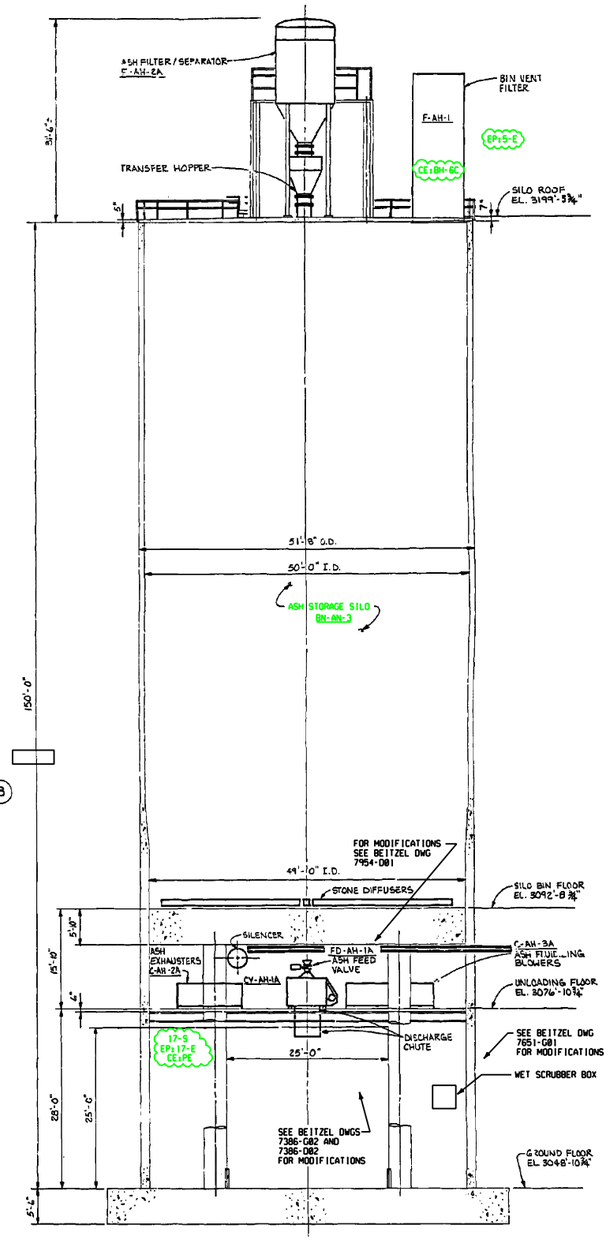

ASH SILO ELEVATION

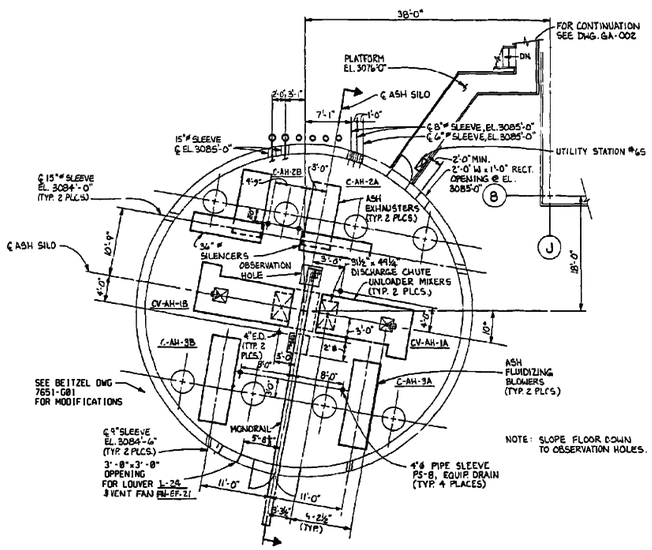

UNLOADING FLOOR PLAN EL. 3076'- 10 3/4"

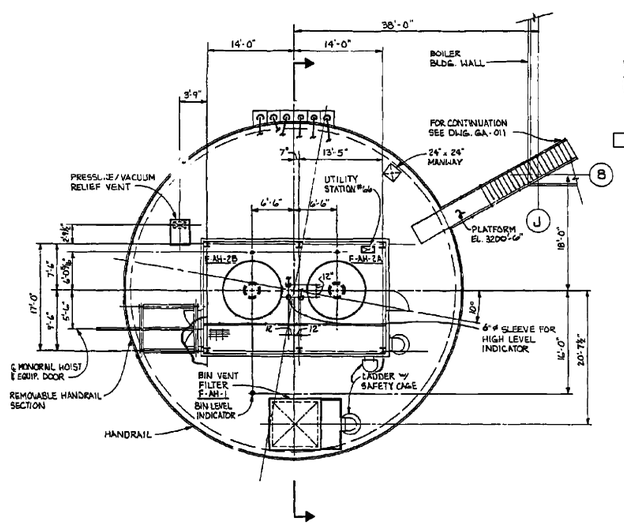

SILO ROOF PLAN EL 3199'-5 3/4"

LEGEND:

EP	EMISSION POINT
CE	CONTROL EQUIPMENT
BH	BAGHOUSE
PE	PARTIAL ENCLOSURE
WS	WATER SPRAY

"This Document is the property of Fru-Con Construction Corporation, and the information contained herein is considered confidential. This Document is not to be used, reproduced, or disclosed in whole or in part without prior written permission of Fru-Con Construction Corporation in each instance."

SCALE IN FEET

REV	DESCRIPTION	
	REV PER ENVIRONMENTAL REDLINE, TRC	PDM 07-29-09
	REVISED PER STATION COMMENTS.	JEG 11/26/03
4	ISSUED PER CONSTRUCTION RECORDS	EGF 7-29-91
3	REVISED AS NOTED	PDM 5-17-90
2	ADDED AV CONTACTORS, ADDED BUILDING ANCHOR BOLTS, REVISE DIMENSIONS & ELEVATIONS	EGF 2-13-90
1	ISSUED FOR CONSTRUCTION	MLS 12-20-89
	GENERAL REVISIONS	MLS 10-26-89
	REVISED PER EQUIPMENT, PLATFORM REVISION	EGF 9-15-89

NORTH BRANCH POWER PROJECT
GRANT COUNTY, WEST VIRGINIA
80 MW BITUMINOUS GOB

FRU-CON CONSTRUCTION CORPORATION
BALLWIN, MISSOURI

BABB and Associates Inc.
Engineers and Consultants
6730 Antioch Road
Shawnee Mission, Kansas 66204

GENERAL ARRANGEMENT
ASH SILO PLAN & ELEVATION

	by	date
DESIGNED	MLS	9-14-89
DRAWN	MLS	9-14-89
CHECKED	NNB	9-14-89
APPROVED	JRB	12-20-89

SHEET
of
DRAWING NUMBER
88-92-1-GA-017

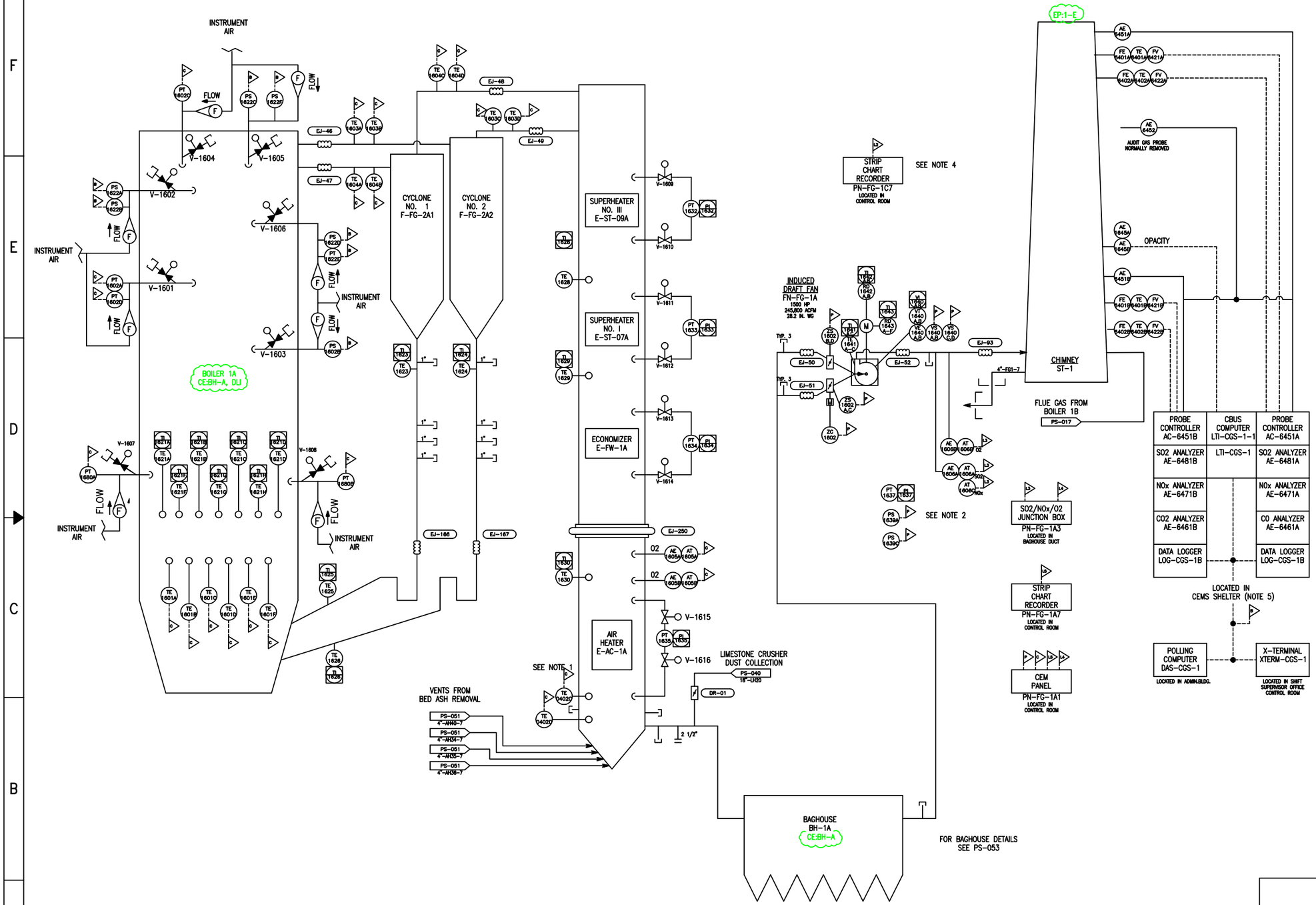

NOTES:

1. TE-0402C AND TE-0402D LOCATED DOWNSTREAM OF THE AIR HEATER ARE PART OF A CONTROL LOOP WHICH IS ALSO SHOWN ON PS-004 AND PS-014
2. PS1638A/B AND PT/PI 1637 NOT IN SERVICE
3. ALL IDENTIFICATION TAGS IN FIELD ARE PREFIXED WITH "FG" ALPHA DESIGNATOR. UNLESS AS DENOTED.
4. PN-FG-1C7 NOT IN SERVICE.
5. CEMS PART 70 INSTALLATION, REFERENCE DRAWINGS INDEXED ON 8668N-88-95-1-EL-020
6. LAST INSTRUMENT NUMBER USED: 1601/1680 LAST LINE NUMBER USED: SEE PS-017. LAST VALVE NUMBER USED: 1616

LEGEND:

EP EMISSION POINT
CE CONTROL EQUIPMENT
BH BAGHOUSE
DLI DRY LIMESTONE INJECTION

CONTROLLED DRAWING
ANY CHANGES MADE TO THIS SYSTEM SHALL BE DOCUMENTED AS NOTED IN FOSSIL AND HYDRO CONTROLS MANUAL SECTION 6.3.

VIRGINIA POWER
NORTH CAROLINA POWER

NORTH BRANCH POWER PLANT
Grant County, West Virginia

FLOW DIAGRAM
FLUE GAS BOILER NO. 1A
NORTH BRANCH POWER STATION

DSGN		DSGN SUPV	
DRWN	SHS	ENGR SUPV	
CHKD		PROJ ENGR	
		SCALE	

DRAWING NO. 88-92-1-PS-016 REV. 7

SH 1 OF 1

DATE	DSGN	DRWN	CHKD	DSGN SUPV	PROJ ENGR	CIVIL ENGR	ELEC ENGR	MECH ENGR	ARCH	E. M. ENGR	I & C ENGR	
07-29-09		TMD	RWM								EAW	7 REVISED PER ENVIRONMENTAL REDLINE.
10-30-03												6 REDRAWN TO SHOW AS-BUILT CONDITIONS PER STATION MARK-UPS.

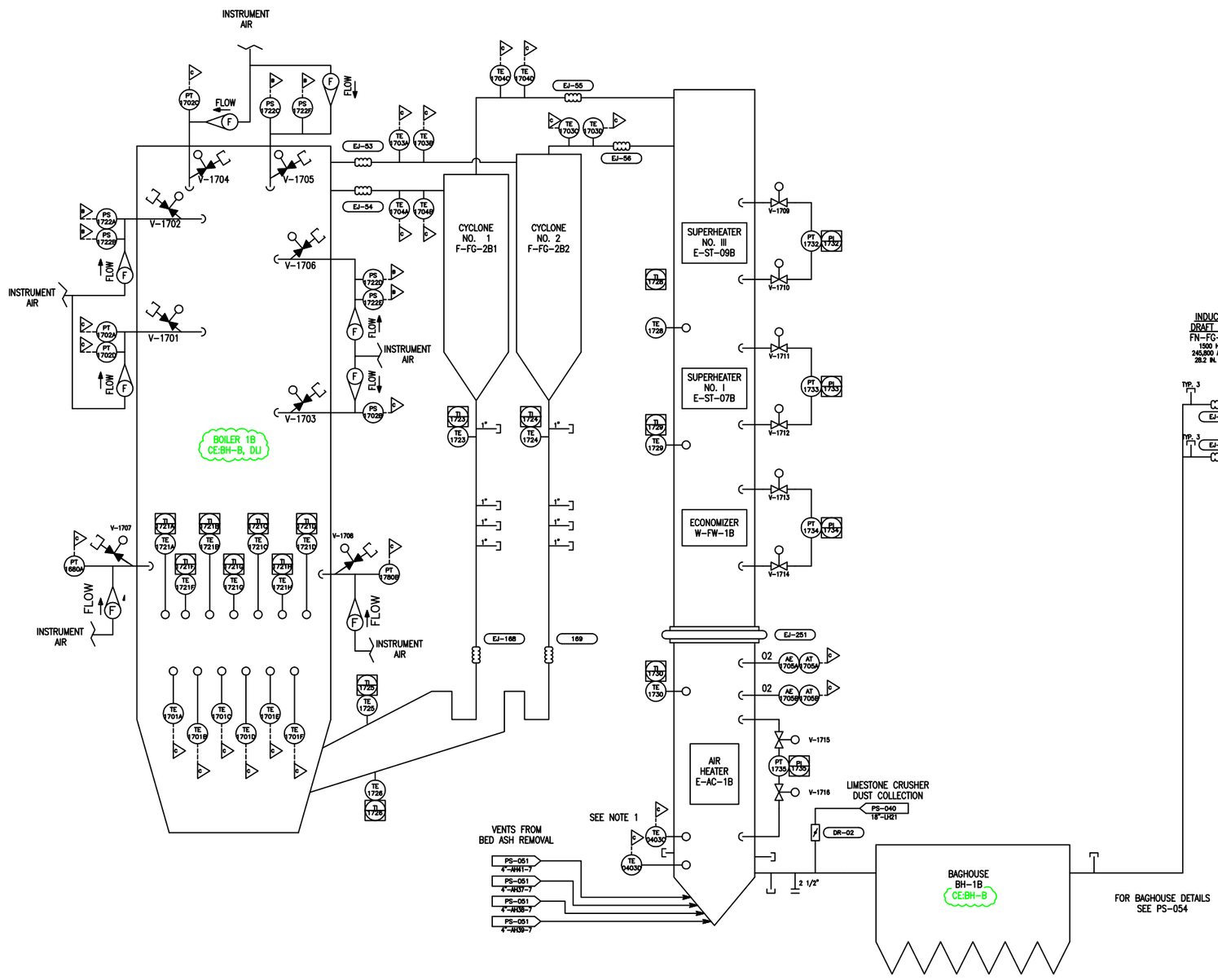

NOTES:

1. TE-0403C AND TE-0403D LOCATED DOWNSTREAM OF THE AIR HEATER ARE PART OF A CONTROL LOOP WHICH IS ALSO SHOWN ON PS-004 AND PS-015
2. PS1739A/B AND PT/PI 1737 NOT IN SERVICE
3. ALL IDENTIFICATION TAGS IN FIELD ARE PREFIXED WITH "FG" ALPHA DESIGNATOR. UNLESS AS DENOTED.
4. LAST INSTRUMENT NUMBER USED: 1701/1780 LAST LINE NUMBER USED: F001 LAST VALVE NUMBER USED: 1716

LEGEND:

EP	EMISSION POINT
CE	CONTROL EQUIPMENT
BH	BAGHOUSE
DLI	DRY LIMESTONE INJECTION

CONTROLLED DRAWING
ANY CHANGES MADE TO THIS SYSTEM SHALL BE DOCUMENTED AS NOTED IN FOSSIL AND HYDRO CONTROLS MANUAL SECTION 6.3.

VIRGINIA POWER
NORTH CAROLINA POWER

NORTH BRANCH POWER PLANT
Grant County, West Virginia

FLOW DIAGRAM
FLUE GAS BOILER NO. 1B
NORTH BRANCH POWER STATION

DSGN		DSGN SUPV		DSPL ENGR	
DRWN	SHS	ENGR SUPV		DRAWING NO.	88-92-1-PS-017
CHKD		PROJ ENGR		REV.	7
		SCALE		SH 1 OF 1	

7	07-29-09	REVISED PER ENVIRONMENTAL REDLINE.
6	10-30-03	REDRAWN TO SHOW AS-BUILT CONDITIONS PER STATION MARK-UPS.

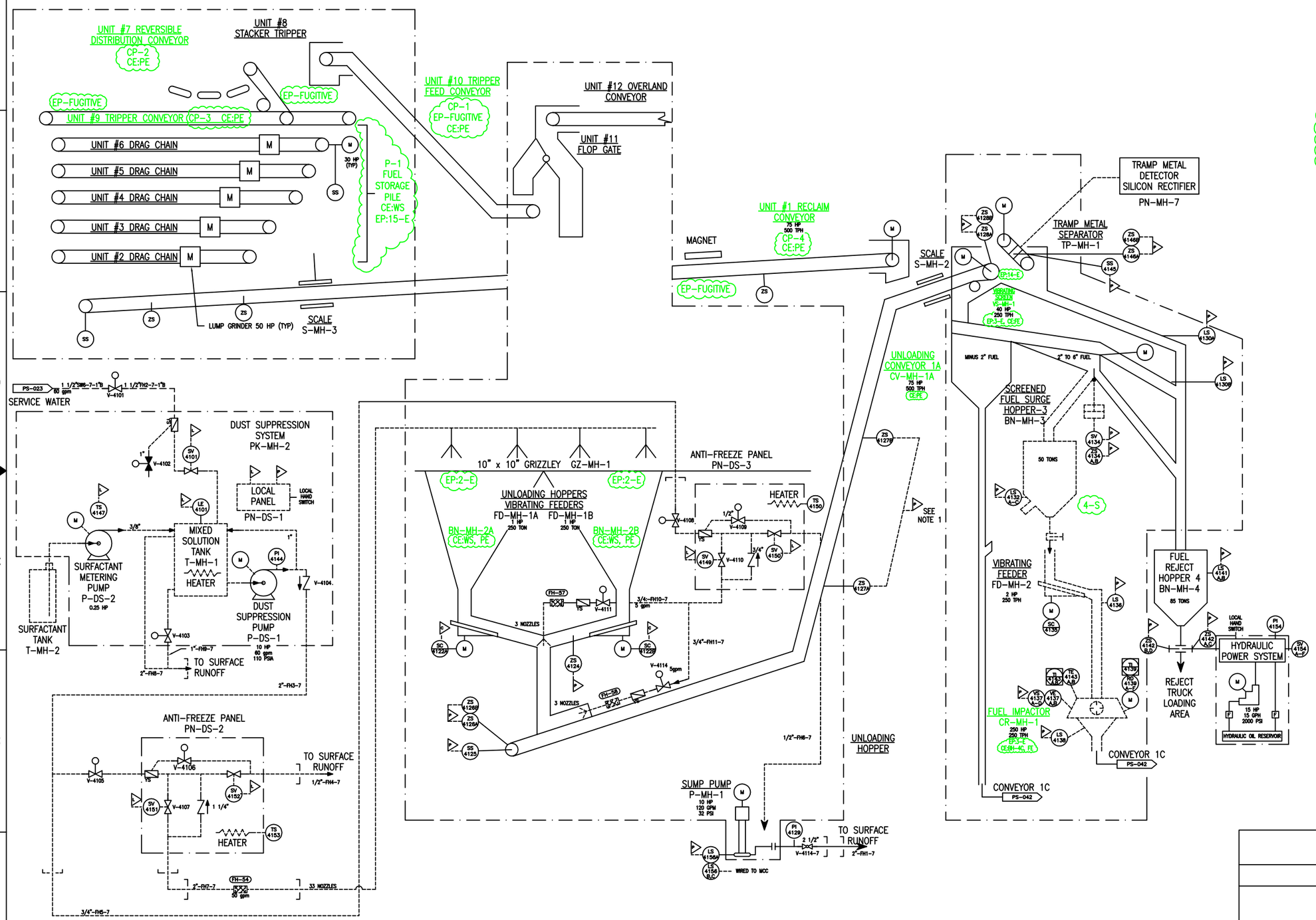

NOTES:

1. CONVEYOR PULL CORD SWITCHES ARE WIRED DIRECTLY TO MCC AND PLC.
2. ROUTE DUST SUPPRESSION PIPING FOR DRAINAGE THROUGH NOZZLES AND SOLENOID BOXES.
3. [- - - - - - -] INDICATES EQUIPMENT NOT IN SERVICE
4. ALL IDENTIFICATION TAGS IN FIELD PREFIXED WITH "MH" ALPHA DESIGNATOR. LAST INSTRUMENT NUMBER USED: 4101/4156; LAST LINE NUMBER USED: SEE PS-043 LAST VALVE NUMBER USED: 4115.

LEGEND:

EP	EMISSION POINT
CE	CONTROL EQUIPMENT
BH	BAGHOUSE
PE	PARTIAL ENCLOSURE
FE	FULL ENCLOSURE
WS	WATER SPRAY

CONTROLLED DRAWING
ANY CHANGES MADE TO THIS SYSTEM SHALL BE DOCUMENTED AS NOTED IN FOSSIL AND HYDRO CONTROLS MANUAL SECTION 6.3.

VIRGINIA POWER
NORTH CAROLINA POWER

NORTH BRANCH POWER PLANT
Grant County, West Virginia

FLOW DIAGRAM
FUEL HANDLING
NORTH BRANCH POWER STATION

DSGN	DSGN SUPV	DSPL ENGR	
DRWN SHS	ENGR SUPV	DRAWING NO. 88-92-1-PS-041	REV. 8
CHKD	PROJ ENGR	SCALE	SH 1 OF 1

8 REVISED PER ENVIRONMENTAL REDLINE. 07-29-02 TMD RWM EAW

7 REDRAWN TO SHOW AS-BUILT CONDITIONS PER STATION MARK-UPS. 10-30-03

DUST COLLECTORS		
	F-MH-2A	F-MH-1
ROTARY VALVE	V-MH-1A	V-MH-1C
ROTARY VALVE SPEED SWITCH*	SS-4260	SS-4259
DUST COLLECTOR FAN	FN-MH-1A 50 HP 16,450 cfm	FN-MH-1C 15 HP 6000 cfm
PRESSURE SWITCH**	PS-4261	PS-4262
PRESSURE INDICATOR	PI-4261	PI-4262

* SENDS SIGNAL TO PLC
** SENDS SIGNAL TO LOCAL SOLENOID TIMER

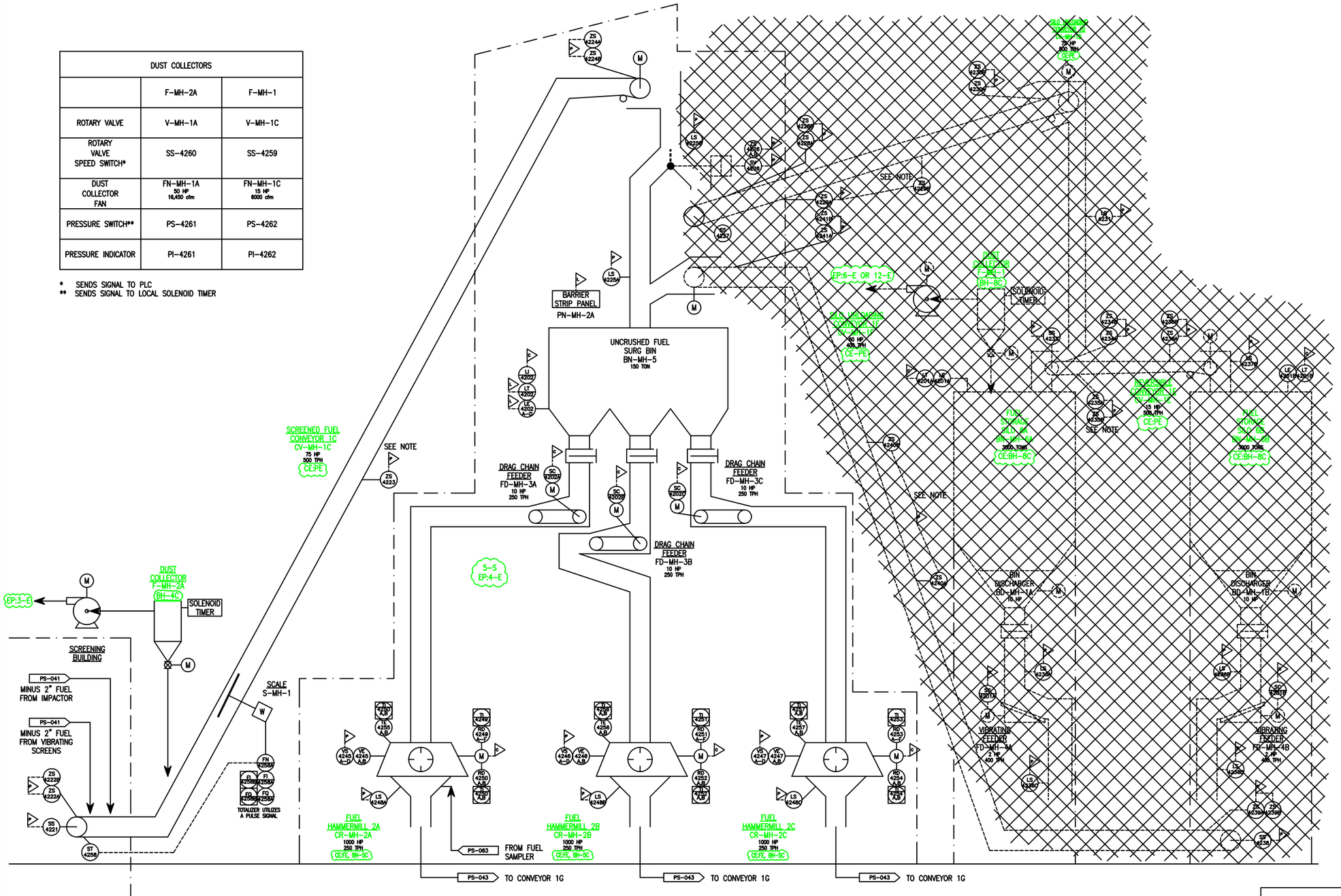

NOTES:

1. CONVEYOR PULL CORD SWITCHES ARE WIRED DIRECTLY TO MCC AND PLC.
2. [----------] INDICATES EQUIPMENT NOT IN SERVICE
3. ALL IDENTIFICATION TAGS IN FIELD PREFIXED WITH "MH" ALPHA DESIGNATOR. LAST INSTRUMENT NUMBER USED: 4202/4262; LAST LINE NUMBER USED: SEE PS-043; LAST VALVE NUMBER USED: NONE.

LEGEND:

ABANDONED IN PLACE

EP	EMISSION POINT
CE	CONTROL EQUIPMENT
BH	BAGHOUSE
PE	PARTIAL ENCLOSURE
FE	FULL ENCLOSURE

CONTROLLED DRAWING
ANY CHANGES MADE TO THIS SYSTEM SHALL BE DOCUMENTED AS NOTED IN FOSSIL AND HYDRO CONTROLS MANUAL SECTION 6.3.

VIRGINIA POWER
NORTH CAROLINA POWER

NORTH BRANCH POWER PLANT
Grant County, West Virginia

FLOW DIAGRAM
FUEL HANDLING
NORTH BRANCH POWER STATION

DSGN	DSGN SUPV	DSPL ENGR	
DRWN SHS	ENGR SUPV	DRAWING NO. 88-92-1-PS-042	REV. 8
CHKD	PROJ ENGR	SCALE	SH 1 OF 1

8	REVISED PER ENVIRONMENTAL REDLINE.	27-29 00 TMD RWM EAW
7	REVISED PER STATION MARK-UP	05-30 00 TMD SWC
6	REDRAWN TO SHOW AS-BUILT CONDITIONS PER STATION MARK-UPS.	10-30 03

DUST COLLECTORS			
	F-MH-3A	F-MH-1A	F-MH-1B
ROTARY VALVE	V-MH-1B	V-MH-1D1	V-MH-1D2
ROTARY VALVE SPEED SWITCH	SS-4353	SS-4354	SS-4355
DUST COLLECTOR FAN	FN-MH-1B 75 HP 23,500 cfm	FN-MH-1D1 15 HP 6,000 cfm	FN-MH-1D2 15 HP 6,000 cfm
PRESSURE SWITCH**	PS-4356	PS-4357	PS-4358
PRESSURE INDICATOR	PI-4356	PI-4357	PI-4358

* SENDS SIGNAL TO PLC
** SENDS SIGNAL TO LOCAL SOLENOID TIMER

NOTES:

1. CONVEYOR PULL CORD SWITCHES ARE WIRED DIRECTLY TO MCC AND PLC.
2. ALL IDENTIFICATION TAGS IN FIELD PREFIXED WITH "MH" ALPHA DESIGNATOR. LAST INSTRUMENT NUMBER USED: 4301/4338; LAST LINE NUMER USED: FH11; LAST VALVE NUMBER USED: NONE.

LEGEND:

EP EMISSION POINT
CE CONTROL EQUIPMENT
BH BAGHOUSE
FE FULL ENCLOSURE

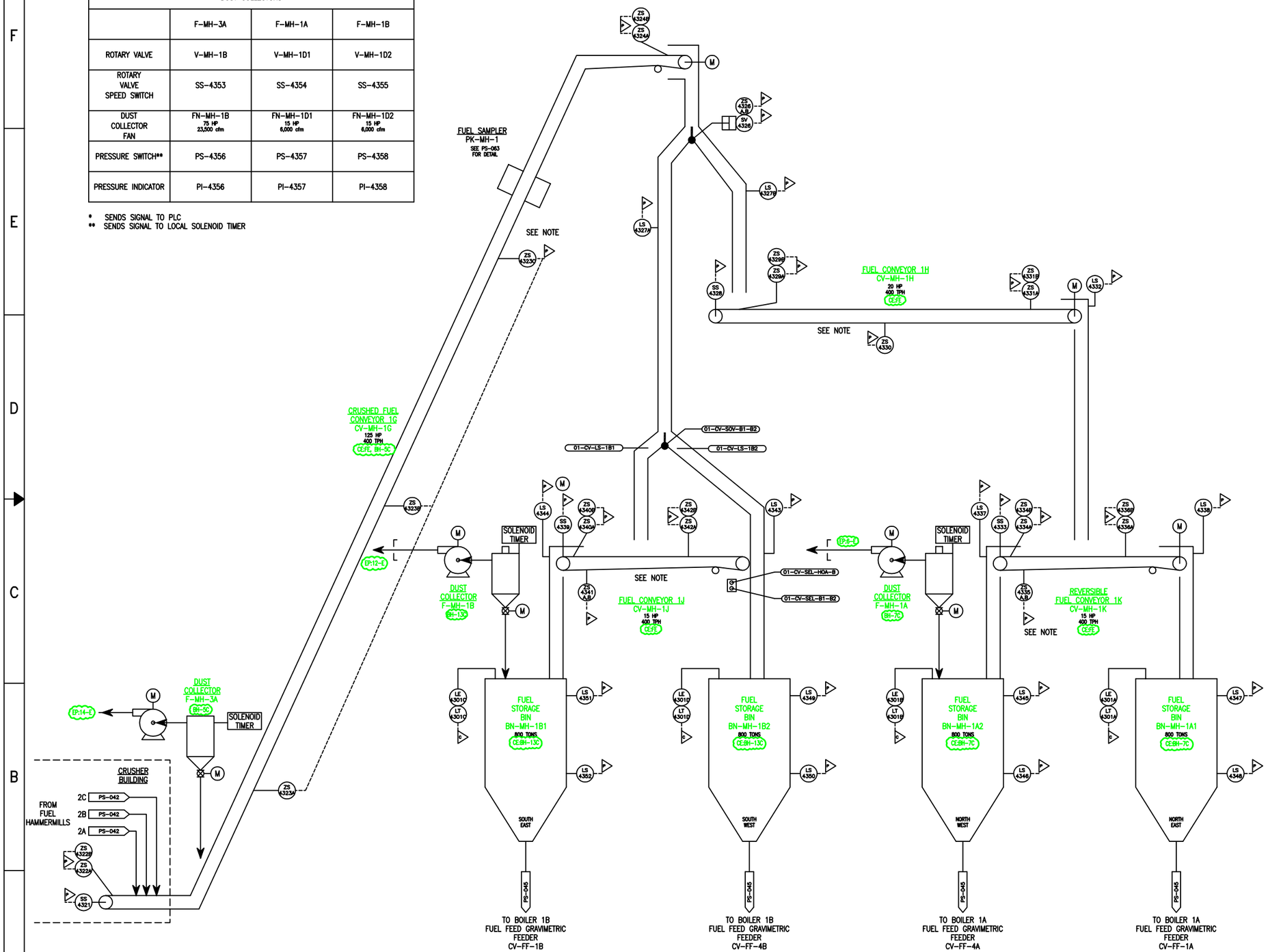

CONTROLLED DRAWING
ANY CHANGES MADE TO THIS SYSTEM SHALL BE DOCUMENTED AS NOTED IN FOSSIL AND HYDRO CONTROLS MANUAL SECTION 6.3.

VIRGINIA POWER
NORTH CAROLINA POWER

NORTH BRANCH POWER PLANT
Grant County, West Virginia

FLOW DIAGRAM
FUEL HANDLING
NORTH BRANCH POWER STATION

DSGN	DSGN SUPV	DSPL ENGR	
DRWN SHS	ENGR SUPV	DRAWING NO. 88-92-1-PS-043	REV. 8
CHKD	PROJ ENGR	SCALE	SH 1 OF 1

DATE	REVISED	DRWN	CHKD
8	07-29-09	TMD	RWM
7	03-20-07	LGH	DFB
6	10-30-03		

NOTES:

1. CONVEYOR PULL CORD SWITCHES ARE WIRED DIRECTLY TO MCC AND PLC
2. ALL IDENTIFICATION TAGS IN FIELD PREFIXED WITH THE "LH" ALPHA DESIGNATOR.
3. LAST INSTRUMENT NUMBER USED: 3901/3946. LAST LINE NUMBER USED: SEE PS-040. LAST VALVE NUMBER USED: 3902

LEGEND:

EP	EMISSION POINT
CE	CONTROL EQUIPMENT
BH	BAGHOUSE
FE	FULL ENCLOSURE
PE	PARTIAL ENCLOSURE

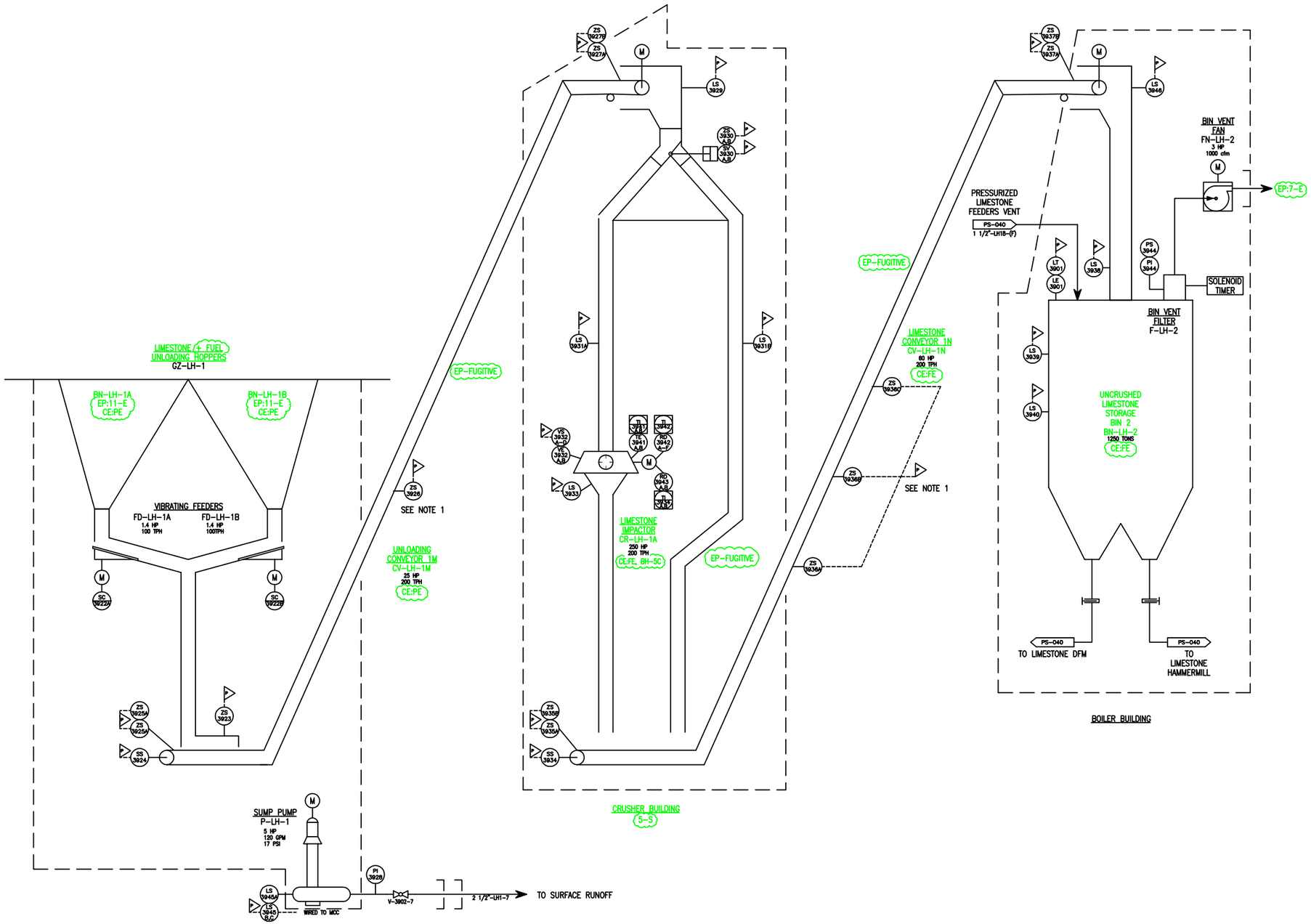

CONTROLLED DRAWING
ANY CHANGES MADE TO THIS SYSTEM SHALL BE DOCUMENTED AS NOTED IN FOSSIL AND HYDRO CONTROLS MANUAL SECTION 6.3.

VIRGINIA POWER
NORTH CAROLINA POWER

NORTH BRANCH POWER PLANT
Grant County, West Virginia

FLOW DIAGRAM
LIMESTONE HANDLING
NORTH BRANCH POWER STATION

DSGN	DSGN SUPV	DSPL. ENGR	
DRWN SHS	ENGR SUPV	DRAWING NO. 88-92-1-PS-039	REV. 7
CHKD	PROJ ENGR	SCALE	SH 1 OF 1

7	REVISED PER ENVIRONMENTAL REDLINE.
6	REDRAWN TO SHOW AS-BUILT CONDITIONS PER STATION MARK-UPS.

NOTES:

1 LAST INSTRUMENT NUMBER USED: 4001/4056
2 LAST LINE NUMBER USED: LH27
3 LAST VALVE NUMBER USED: 4032
4 SEE PS-063 FOR DETAIL OF DFM LUBRICATION SYSTEM

LEGEND:

ABANDONED IN PLACE

EP EMISSION POINT
CE CONTROL EQUIPMENT
BH BAGHOUSE
FE FULL ENCLOSURE

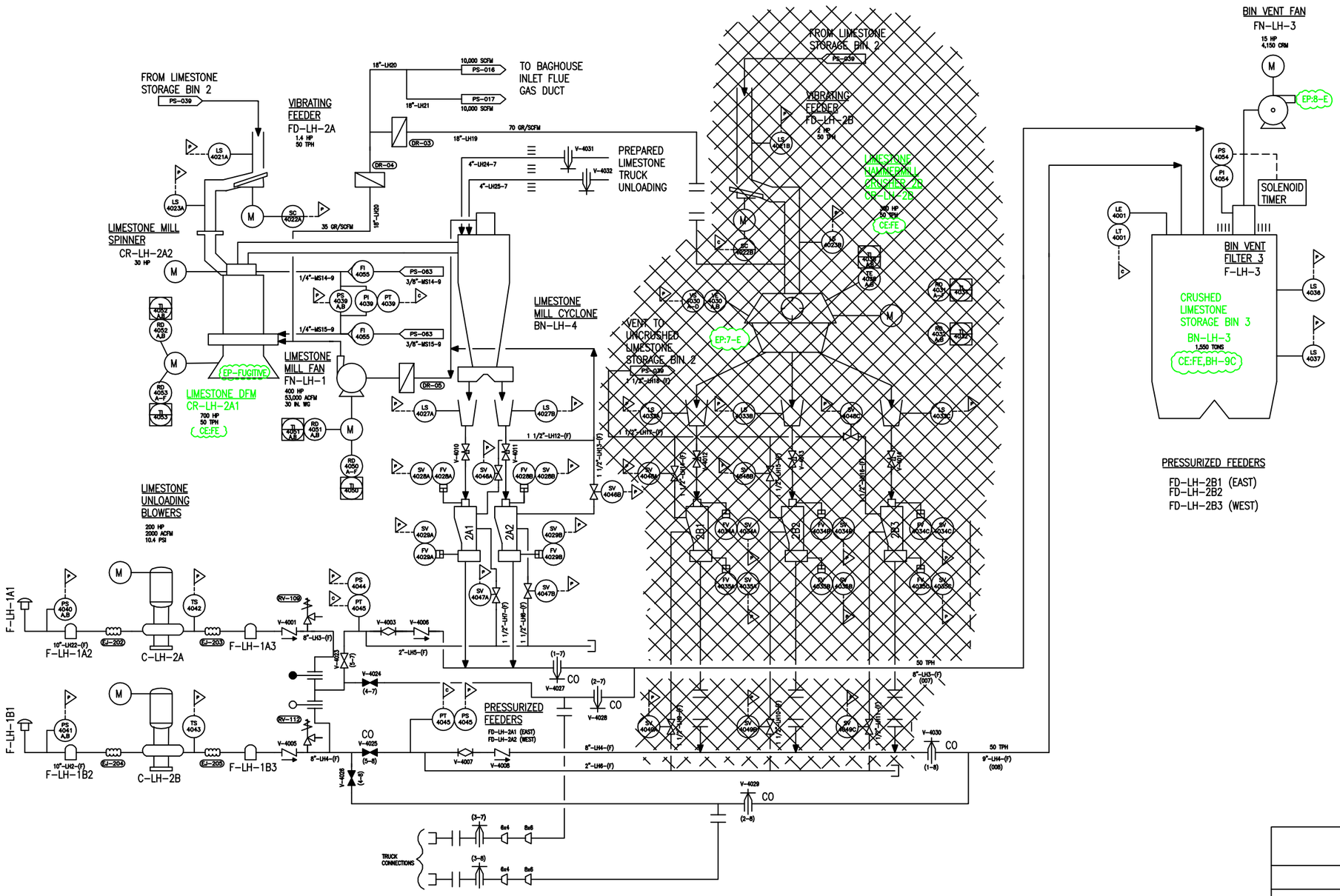

CONTROLLED DRAWING
ANY CHANGES MADE TO THIS SYSTEM SHALL BE DOCUMENTED AS NOTED IN FOSSIL AND HYDRO CONTROLS MANUAL SECTION 6.3.

VIRGINIA POWER
NORTH CAROLINA POWER

NORTH BRANCH POWER PLANT
Grant County, West Virginia

FLOW DIAGRAM
LIMESTONE HANDLING PLANT NO. 2
NORTH BRANCH POWER STATION

DSGN	DSGN SUPV	DSPL ENGR	
DRWN SHS	ENGR SUPV	DRAWING NO. 88-92-1-PS-040	REV. 10
CHKD	PROJ ENGR		
	SCALE		SH 1 OF 1

10	07-28-09	TMD	RWM	REVISED PER ENVIRONMENTAL REDLINE.
9	05-21-08	JEP	MWR	RWM	REVISED PER STATION MARK-UP
8	05-30-06	TMD	SWC	REVISED PER STATION MARK-UP
7	10-30-03			REDRAWN TO SHOW AS-BUILT CONDITIONS PER STATION MARK-UPS.

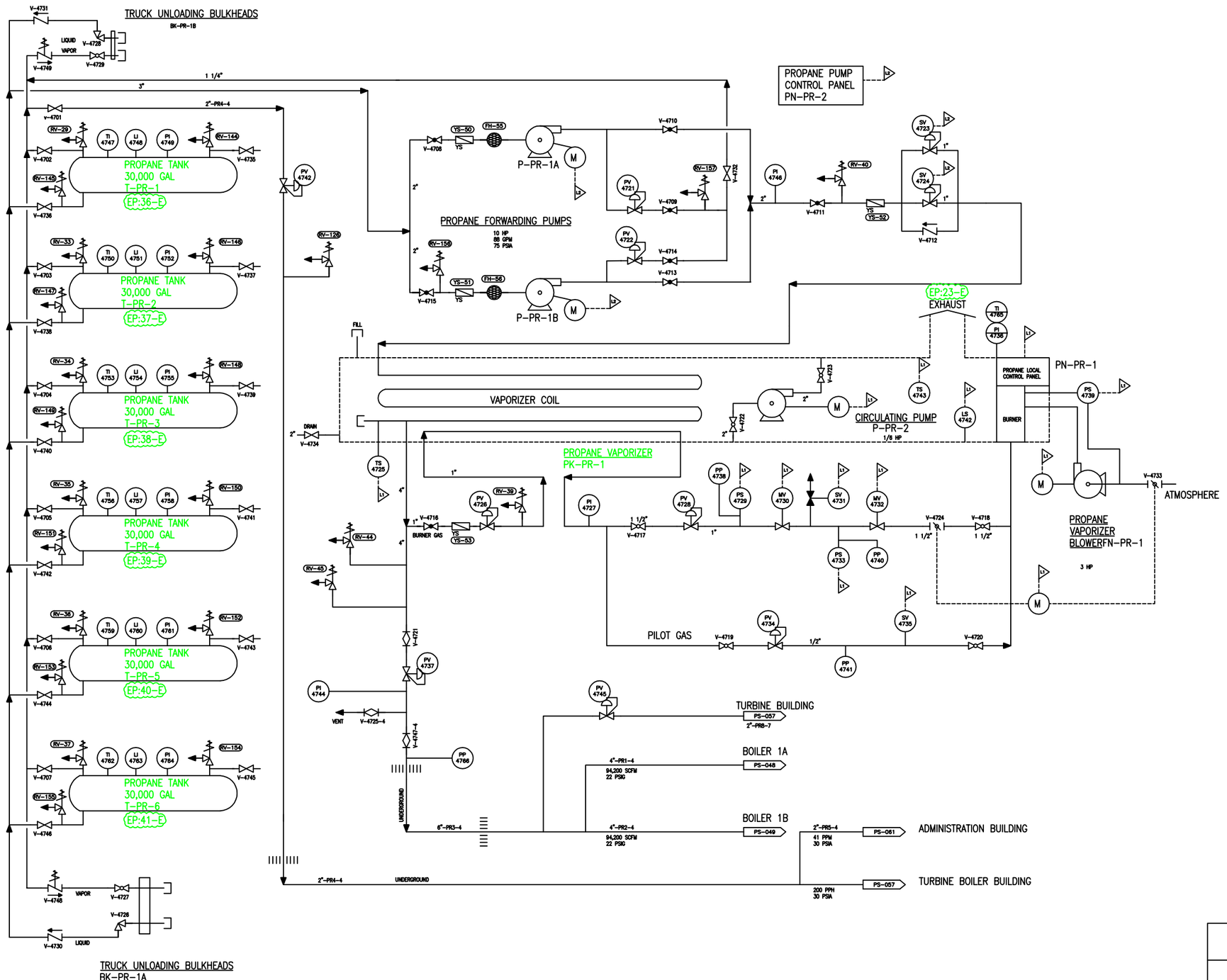

NOTES:

1 LAST INSTRUMENT NUMBER USED: 0000/4766
2 LAST LINE NUMBER USED: PR8
3 LAST VALVE NUMBER USED: 4749

LEGEND:

EP EMISSION POINT
CE CONTROL EQUIPMENT

CONTROLLED DRAWING
ANY CHANGES MADE TO THIS SYSTEM SHALL BE DOCUMENTED AS NOTED IN FOSSIL AND HYDRO CONTROLS MANUAL SECTION 6.3.

VIRGINIA POWER
NORTH CAROLINA POWER

NORTH BRANCH POWER PLANT
Grant County, West Virginia

FLOW DIAGRAM
PROPANE
NORTH BRANCH POWER STATION

6	REVISED PER ENVIRONMENTAL REDLINE.	07-29-09	TMD RWM EAW
5	REDRAWN TO SHOW AS-BUILT CONDITIONS PER STATION MARK-UPS.	10-30-03	

DSGN — DSGN SUPV — DSPL ENGR
DRWN SHS — ENGR SUPV — DRAWING NO. 88-92-1-PS-047 — REV. 6
CHKD — PROJ ENGR — SCALE — SH 1 OF 1

ATTACHMENT D - Emission Units Table

(includes all emission units at the facility except those designated as insignificant activities in Section 4, Item 24 of the General Forms)

Emission Unit ID[1]	Emission Point ID[1]	Emission Unit Description	Year Installed/ Modified	Design Capacity	Control Device[1]
A	1-E	Boiler 1A – Ahlstrom Model Pyroflow CFB; S/N W-19206-W	1989	597 mmBtu/hr	DLI, BH-A
B	1-E	Boiler 1B – Ahlstrom Model Pyroflow CFB; S/N W-19207-W	1989	597 mmBtu/hr	DLI, BH-B
BN-MH-2A / BN-MH-2B	2-E	Fuel Hoppers	1989	500 TPH each	PE, WS
1A	14E	Conveyor from Fuel Hoppers to Fuel Screening Bldg.	1989	500 TPH	PE
CP-1	Fugitive	Conveyor from Fuel Hoppers to Conveyors CP-2, CP-3, & CP- 4	1989	500 TPH	PE
CP-1, CP-2, CP-3, CP- 4	Fugitive	Conveyors from CP-1 to P1	1989	500 TPH	PE
P-1	15-E	Fuel Storage Pile	2000	5000 tons	WS
1-S	3-E	Fuel Screening Building	1989	325 TPH	FE, BH-4C
VS-MH-1	3-E	Vibrating Screen	1989	250 TPH	FE
1C	14-E	Conveyor from Fuel Screening Bldg. to Crushing Bldg. and Conveyor 1D	1989	500 TPH	PE
1D	14-E	Conveyor from 1C to Conveyor 1E	1989	500 TPH	PE
1E	14-E	Conveyor to Silos 6A and 6B	1989	500 TPH	PE
Silo 6A & Silo 6B	6-E or 12-E	Fuel Storage Silos and transfer to Conveyor 1F	1989	6000 tons	BH-8C
1F	14-E	Conveyor from Silos 6A & 6B to Crushing Bldg.	1989	400 TPH	PE
5-S	4-E	Crusher Building	1989	500 TPH	BH-5C
CR-MH-2A, CR-MH-2B, CR-MH-2C	4-E	Fuel Hammermill 2A, Fuel Hammermill 2B, Fuel Hammermill 2C	1989	250 TPH each	FE, BH-5C

CV-MH-1G	14-E	Main Fuel Conveyor to Conveyors 1H, 1J and 1K(via 1H)	1989	400 TPH	FE, BH-5C
CV-MH-1H, -1J, -1K	14-E	Conveyors to BN-MH-1A1, -1A2, -1B1 & -1B2 Fuel Bunkers	1989	400 TPH each	FE
BN-MH-1A1 / BN-MH-1A2	6-E	Northeast / Northwest Fuel Bunkers	1989 / 1989	800 tons each	BH-7C
BN-MH-1B1 / BN-MH-1B2	12-E	Southeast / Southwest Fuel Bunkers	1989 / 1989	800 tons each	BH-13C
BN-LH-1A / BN-LH-1B	11-E	Limestone & Fuel Hoppers	1989 / 1989	100 TPH each	PE
CV-LH-1M	fugitive	Conveyor from Limestone and Fuel Hoppers to Crusher Bldg.	1989	200 TPH each	PE
CR-LH-1A	fugitive (vents inside)	Limestone Impactor 1	1989	200 TPH	FE, BH-5C
CV-LH-1N	fugitive	Conveyor from Crusher Bldg. to Uncrushed Limestone Storage Bin	1989	200 TPH	FE
BN-LH-2	7-E	Uncrushed Limestone Storage Bin	1989	1250 tons	FE
CR-LH-2A1	fugitive (vents inside)	Limestone Direct Fired Mill	1989	50 TPH	FE
CR-LH-2B	4-E	Limestone Hammermill Crusher 2B	1989	50 TPH	FE
BN-LH-3	8-E	Crushed Limestone Storage Silo	1989	1550 tons	FE, BH-9C
F-AH-2A / F-AH-2B	9-E, 16-E	Boiler A Ash Separator / Boiler B Ash Separator	1989 / 1989	50 TPH each	FE
BN-AH- 3	5-E	Ash Storage Silo	1989	7030 tons	BH-6C
11-S	fugitive	Paved Road	1989	N/A	VS, WS
17-S	17-E	Truck Loading (includes ash transfer points 4sa, sb, sc, sd, se & sf in R13-2075 application)	1999	250 TPH	PE, WS
EG-1	20E	Diesel Generator	1989	0.28 mmBtu/hr; 124 bhp	None
1-EG-GEN2	Onan GenSet 1	85GGHG Onan Generator Set	2002	164.2 bhp	None
1-EG-GEN-3	Onan GenSet 2	85GGHG Onan Generator Set	2002	164.2 bhp	None

P-FP-2	21-E	Diesel Fire Pump	1989	0.42 mmBtu/hr; 302 bhp	None
ME-CA-1	22-E	Diesel Air Compressor (portable)	1989	0.70 mmBtu/hr; 275 bhp	None
PK-PR-1	23E	Propane Vaporizer	1989	5.4 mmBtu/hr	None
T-MH-4	24E	Freeze control agent (diethylene glycol) tank	1989	2000 gals	None
T-MH-1	25E	Diesel Tank	2008	1000 gals	None
T-DS-2	26E	Diesel Tank	1989	450 gals	None
T-PT-3	27E	Diesel Tank	1989	275 gals	None
T-EG-1	28E	Diesel Tank (emerg. generator)	1989	100 gals	None
T-MH-3	29E	Kerosene Tank	1989	2000 gals	None
T-MH-5	30E	Kerosene Tank (not in service)	1989	2000 gals	None
T-PT-1	31E	Kerosene Tank	1989	275 gals	None
T-PT-2	32E	Kerosene Tank	1989	275 gals	None
T-MH-2	33E	Gasoline Tank	2008	1000 gals	None
T-LO-3	34E	Turbine Lube oil Tank	1989	3800 gals	None
T-LO-1	35E	Turbine Lube oil Tank	1989	3800 gals	None
T-PR-1 T-PR-2 T-PR-3 T-PR-4 T-PR-5 T-PR-6	36E 37E 38E 39E 40E 41E	Propane Tanks (6 identical)	1989	30,000 gals each	None

[1]For 45CSR13 permitted sources, the numbering system used for the emission points, control devices, and emission units should be consistent with the numbering system used in the 45CSR13 permit. For grandfathered sources, the numbering system should be consistent with registrations or emissions inventory previously submitted to DAQ. For emission points, control devices, and emissions units which have not been previously labeled, use the following 45CSR13 numbering system: 1S, 2S, 3S,... or other appropriate description for emission units; 1C, 2C, 3C,... or other appropriate designation for control devices; 1E, 2E, 3E, ... or other appropriate designation for emission points.

ATTACHMENT E
EMISSION UNIT FORMS

ATTACHMENT E

SOURCES FOR EMISSION POINT 1-E

BOILER 1A & 1B

ATTACHMENT E - Emission Unit Form

Emission Unit Description

Emission unit ID number:	**Emission unit name:**	**List any control devices associated with this emission unit:**
A and B	Sources for Emission Point 1-E: A is CFB #1 Boiler B is CFB #2 Boiler	Dry (pulverized) limestone injection, Baghouse A & B

Provide a description of the emission unit (type, method of operation, design parameters, etc.):
The Emission Units A and B are the main boilers at the North Branch Power Station. Each boiler is designed to combust bituminous coal waste. Each boiler has design heat input of 597 mmBtu/hr which will produce steam at a rate of 395,000 lbs./hr.

Manufacturer:	**Model number:**	**Serial number:**
Ahlstrom Model	Pyroflow circulating fluidized bed water tube boilers	CFB A: W-19206-W CFB B: W-19207-W
Construction date:	**Installation date:**	**Modification date(s):**
1989	1989	

Design Capacity (examples: furnaces - tons/hr, tanks - gallons):
A is designed to produce 395,000 lbs/hr of steam at a mawp of 1770 psig and 955°F.
B is designed to produce 395,000 lbs/hr of steam at a mawp of 1770 psig and 955°F.

Maximum Hourly Throughput:	**Maximum Annual Throughput:**	**Maximum Operating Schedule:**
A - 395,000 lbs/hr of steam at a mawp of 1770 psig and 955°F B - 395,000 lbs/hr of steam at a mawp of 1770 psig and 955°F	A - 3,460,200,000 lbs/yr of steam B - 3,460,200,000 lbs/yr of steam	8760 hours

Fuel Usage Data **(fill out all applicable fields)**

Does this emission unit combust fuel? _x_ Yes ___ No	**If yes, is it?** ___ Indirect Fired _x_ Direct Fired
Maximum design heat input and/or maximum horsepower rating: The maximum design heat input for each boiler is 597 mmBtu/hr. There are two fuel feeders per boiler rated at 61 tph maximum each feeder	**Type and Btu/hr rating of burners:** The average fuel consumption with the higher BTU fuel that we use is 15 tph each feeder.

List the primary fuel type(s) and if applicable, the secondary fuel type(s). For each fuel type listed, provide the maximum hourly and annual fuel usage for each.
The fuel for the CFBs is bituminous coal waste. Each boiler consumes fuel at a maximum hourly rate of 40 tons per hour. Thus, each boiler would have a maximum annual fuel usage of 350,400 tons based on 8760 hours of operation in a year. Each CFB boiler also contains 4 propane fired burners; however, the burners are only used for startup purposes.

Describe each fuel expected to be used during the term of the permit.

Fuel Type	Max. Sulfur Content	Max. Ash Content	BTU Value
Blended Fuel	4%	varies	varies

Emissions Data		
Criteria Pollutants	Potential Emissions	
	PPH	TPY
Carbon Monoxide (CO)	203	889
Nitrogen Oxides (NO_X)	478	2094
Lead (Pb)	0.0095	0.04
Particulate Matter ($PM_{2.5}$)	N/A	N/A
Particulate Matter (PM_{10})	N/A	N/A
Total Particulate Matter (TSP)	35.8	157
Sulfur Dioxide (SO_2)	810	3548
Volatile Organic Compounds (VOC)	6	26
Hazardous Air Pollutants	Potential Emissions	
	PPH	TPY
Mercury	0.0206	0.09
Regulated Pollutants other than Criteria and HAP	Potential Emissions	
	PPH	TPY
Fluorides	0.639	3
Beryllium	0.00019	0

List the method(s) used to calculate the potential emissions (include dates of any stack tests conducted, versions of software used, source and dates of emission factors, etc.).

The above calculations are based on the following: TPY = current permit limits (lb/hr) x 8760 (hrs/year).
For Actual Emissions see Attachment I.

Applicable Requirements

List all applicable requirements for this emission unit. For each applicable requirement, include the underlying rule/regulation citation and/or construction permit with the condition number. (*Note: Title V permit condition numbers alone are not the underlying applicable requirements*). If an emission limit is calculated based on the type of source and design capacity or if a standard is based on a design parameter, this information should also be included.

Limitations and Standards

Visible Emissions from each stack shall not exceed ten (10) percent opacity based on a six minute block average.
[45CSR§2-3.1., 45CSR13/14- Permit No. R13-1020B/R14-4B §(B)(2)(a)] (Title V permit condition 4.1.1)

Compliance with the visible emission requirements of 45CSR2 section 3.1. shall be determined in accordance with 40 CFR Part 60, Appendix A, Method 9 or by using measurements from continuous opacity monitoring systems and as described in the approved monitoring plan. [*Permit R13-1020/R14-4B serves as the approved monitoring plan in conjunction with the supplemental Parametric monitoring Plan dated March 21, 2003 attached in Appendix B of this permit.*]
[45CSR§2-3.2., 45CSR§2A-6] (Title V permit condition 4.1.2)

The addition of sulfur oxides to a combustion unit exit gas stream for the purpose of improving emissions control equipment is prohibited unless written approval for such addition is provided by the Secretary.
[45CSR§2-4.4.] ((Title V permit condition 4.1.3)

Compliance with the visible emission limit shall be demonstrated by periodic testing in accordance with 40 C.F.R. Part 60, Appendix A, Method 9, or a certified continuous opacity monitoring system, as approved by the Secretary. Compliance with the weight emission limit shall be demonstrated by periodic particulate matter stack testing, conducted in accordance with the appropriate test method set forth in the Appendix to 45CSR2 or other equivalent EPA approved method approved by the Secretary. Such testing shall be conducted at a frequency to be established by the Secretary.
[45CSR§2-8.1.a.] (Title V permit condition 4.1.4)

Compliance with the visible emissions limit shall be monitored as set forth in the approved monitoring plan for each emission unit. [*Permit R13-1020/R14-4B in conjunction with the supplemental Parametric monitoring Plan dated March 21, 2003 attached in Appendix B of this permit.*] **[45CSR§2-8.2.a.] (Title V permit condition 4.1.5)**

Records of monitored data established in the monitoring plan shall be maintained on site and shall be made available to the Secretary or his duly authorized representative upon request.
[45CSR§2-8.3.a.] (Title V permit condition 4.1.6)

A periodic exception report shall be submitted to the Secretary, in a manner and at a frequency to be established by the Secretary. Such exception report shall provide details of all excursions outside the range of measured emissions or monitored parameters established in an approved monitoring plan, and shall include, but not be limited to, the time of the excursion, the magnitude of the excursion, the duration of the excursion, the cause of the excursion and the corrective action taken.
[45CSR§2-8.3.b.] ((Title V permit condition 4.1.7)

The visible emission standards of condition 4.1.1., shall apply at all times except in periods of start-ups, shutdowns and malfunctions.
[45CSR§2-9.1.] (Title V permit condition 4.1.8)

Any fuel burning unit(s) including associated air pollution control equipment, shall at all times, including periods of start-up, shutdowns, and malfunctions, to the extent practicable, be maintained and operated in a manner consistent with good air pollution control practice for minimizing emissions.
[45CSR§2-9.2., 45CSR16, 40 C.F.R. § 60.11(d)] ((Title V permit condition 4.1.9)

The particulate matter reduction of potential combustion concentration from each of the two (2) circulating fluidized bed boilers shall be no less than 99%.
[45CSR16, 40 C.F.R. § 60.42a(2)] (Title V permit condition 4.1.10)

Rule 13/14 Permit

The maximum percent ash content in fuel to be fired in CFB boilers A & B shall not exceed 70%.
[45CSR13/14- Permit No. R13-1020B/R14-4B Modification Application update (attached to letter dated June 1, 1993) "Affected Source Sheet" page 9 Item 2.A.(4) & page 11 Item 2.A.(4)]
(Title V permit condition 4.1.11)

The emissions from the stack serving the two permitted circulating fluidized bed boilers shall not exceed any of the following limitations:

Pollutant	lbm/hr	lbm/mmBtu	Concentration
Particulate Matter	35.8	0.03	0.018 gr/dscf @ 3.5% O_2
Sulfur Dioxide	810	0.678	314 ppmv @ 3.5% O_2
Nitrogen Oxides (NO_2)	478	0.40	257 ppmvd @ 3.5% O_2
Volatile Organic Compounds	6.0	0.005	N/A
Carbon Monoxide	203	0.17	N/A
Lead	0.0095	7.96×10^{-6}	N/A
Mercury	0.0206	1.75×10^{-5}	N/A
Fluorides	0.639	5.4×10^{-4}	N/A
Beryllium	1.9×10^{-4}	1.5×10^{-7}	N/A

Compliance with this streamlined PM limit assures compliance with 45CSR2. Compliance with these streamlined PM, and SO_2, limits assures compliance with 40 CFR 60 Subpart Da.

[45CSR13/14 - Permit No. Permit No. R13-1020B/R14-4B §(A)(1), 45CSR16, 40 C.F.R. § 60.42a(a)(1)]
(Title V permit condition 4.1.12)

Sulfur dioxide emissions to the atmosphere from each of the two (2) circulating fluidized bed boilers shall be reduced by no less than ninety-five (95) percent of the potential combustion concentrations of sulfur dioxide.
[45CSR13/14 - Permit No. R13-1020B/R14-4B §(A)(9)]
(Title V permit condition 4.1.13)

The Company shall comply with the parametric monitoring plan, attached in Appendix B, and the inspection and maintenance plan (I& M plan) as summarized in Appendix C, and implemented for the particulate matter removal system per Consent Order CO-R2-E-2002-17.
[Consent Order No. CO-R2-E-2002-17 Section III.3., III.4. and III.5. State-Enforceable only.]
(Title V permit condition 4.1.14)

____ Permit Shield

For all applicable requirements listed above, provide monitoring/testing/recordkeeping/reporting which shall be used to demonstrate compliance. If the method is based on a permit or rule, include the condition number or citation. (Note: Each requirement listed above must have an associated method of demonstrating compliance. If there is not already a required method in place, then a method must be proposed.)

Monitoring Requirements

The owner or operator shall install, calibrate, certify, operate, maintain, and record the output of continuous monitoring systems that measure all Opacity, SO_2, NO_x, and O_2 or CO_2 emissions from emission point *1-E* as specified in 40 C.F.R. Part 60, Subpart Da for the CFB boilers.
[45CSR16, 40 C.F.R. § 60.47a, 40 C.F.R. § 60.13, 45CSR13/14 - Permit No. R13-1020B/R14-4B §(B)(2)d)]
(Title V permit condition 4.2.1)

Testing Requirements

Compliance with the particulate matter emission limitations under Provision (A)(1) of Permit No, R13-1020/R14-4B and 40 CFR 60.42a(a) shall be demonstrated in accordance with 40 CFR 60.8, 40 CFR 60.46a, 40 CFR 60.48a. Compliance with the particulate matter emission limitation constitutes compliance with the particulate matter percent reduction requirement under 4.1.10. of this permit.
[45CSR13/14 - Permit No. R13-1020B/R14-4B §(B)(2)b), 45CSR16, 40 C.F.R. § 60.46a(a)]
(Title V permit condition 4.3.1)

Compliance with the sulfur dioxide emission limitation and sulfur dioxide reduction requirements (determined on a 30-day rolling average) under Provisions (A)(1) and (A)(9) of Permit No, R13-1020/R14-4B [conditions 4.1.12. and 4.1.13. of this permit] and as required by 40 CFR 60.43a(a) shall be demonstrated in accordance with 40 CFR 60.8, 40 CFR 60.46a, 40 CFR 60.47a and 40 CFR 60.48a, provided however, that SO2 emissions from the boiler stack shall not exceed the following maximum limits for any 3-hour or 24-hour periods:
24-hr: 0.84 lb/mmBtu and 1015 lb/hr
3-hr: 1.0 lb/mmBtu and 1195 lb/hr
Appropriate recording and data reduction procedures shall be maintained by the permittee.
[45CSR13/14 - Permit No. R13-1020B/R14-4B §(B)(2)c), 40 C.F.R. §60.43a(g)]
(Title V permit condition 4.3.2)

Compliance with the nitrogen oxides emission limitation under Provision (A)(1) of Permit No, R13-1020/R14-4B [condition 4.1.12. of this permit] shall be demonstrated in accordance with 40 CFR 60.8, 40 CFR 60.46a, 40 CFR 60.47a, and 40 CFR 60.48a.
[45CSR13/14 - Permit No. R13-1020B/R14-4B §(B)(3)]
(Title V permit condition 4.3.3)

Compliance with the volatile organic compound emission limitation under Provision (A)(1) of Permit No, R13-1020/R14-4B [condition 4.1.12. of this permit] shall be demonstrated in accordance with 40 CFR 60, Appendix A - Method 25.
[45CSR13/14 - Permit No. R13-1020B/R14-4B §(B)(4)]
(Title V permit condition 4.3.4)

The owner or operator shall conduct a test at least once every five (5) years to determine the compliance of the CFB Boilers A & B with the carbon monoxide (CO) limits of condition 4.1.12. Such tests shall be conducted in accordance with 40 CFR 60 Appendix A - Method 10. A compliance test shall be conducted no later than eighteen (18) months of the issuance date of this permit. An emission factor shall be determined from the test results and updated from the results of each subsequent test. The emission factor shall be used for compliance demonstration for periods between tests.
[45CSR§30-5.1.c., 45CSR13/14 - Permit No. R13-1020B/R14-4B §(B)(5)]
(Title V permit condition 4.3.5)

Compliance with the emission limitation for lead under Provision (A)(1) of Permit No, R13-1020/R14-4B [condition 4.1.12. of this permit] shall be demonstrated in accordance with 40 CFR 60 Appendix A - Method 12.
[45CSR13/14 - Permit No. R13-1020B/R14-4B §(B)(6)]
(Title V permit condition 4.3.6)

Compliance with the emission limitation for mercury under Provision (A)(1) of Permit No, R13-1020/R14-4B [condition 4.1.12. of this permit] shall be demonstrated in accordance with 40 CFR 61 Appendix B - Method 101A.
[45CSR13/14 - Permit No. R13-1020B/R14-4B §(B)(7)]
(Title V permit condition 4.3.7)

Compliance with the emission limitation for fluorides under Provision (A)(1) of Permit No, R13-1020/R14-4B [condition 4.1.12. of this permit] shall be demonstrated in accordance with 40 CFR 60, Appendix A - Method 13.
[45CSR13/14 - Permit No. R13-1020B/R14-4B §(B)(8)]
(Title V permit condition 4.3.8)

Compliance with the emission limitation for beryllium under Provision (A)(1) of Permit No, R13-1020/R14-4B [condition 4.1.12. of this permit] shall be demonstrated in accordance with 40 CFR 61, Appendix B - Method 104.
[45CSR13/14 - Permit No. R13-1020B/R14-4B §(B)(9)]
(Title V permit condition 4.3.9)

The owner or operator shall conduct, or shall have conducted, tests to determine the compliance of CFB Boilers A & B with the particulate matter mass emission limitations. Such tests shall be conducted in accordance with the appropriate method set forth in 45CSR2 Appendix - Compliance Test Procedures for 45CSR2 or other equivalent EPA approved method approved by the Secretary. Such tests shall be conducted in accordance with the schedule set forth in the following table. The initial baseline compliance test was completed in February 2002 and the test results were >80% of the weight emission standard. A subsequent test was performed in June 2002 that resulted in emissions <50% of the weight emission standard. The testing frequency was therefore "Annual." In accordance with the retest frequency, a test was completed on February 5, 2003 and resulted in mass emission rates <50% of the weight emission standard. Therefore, with two successive tests indicating mass emission rates <50% of weight emission standard, the current testing frequency is "Once/2 years." Subsequent testing shall be based on the schedule below.

Test	Test Results	Testing Frequency
Initial Baseline	≤50% of weight emission standard	Once/3 years
Initial Baseline	Between 50% and 80 % of weight emission standard	Once/2 years
Initial Baseline	≥80% of weight emission standard	Annual
Annual	After three successive tests indicate mass emission rates ≤50% of weight emission standard	Once/3 years
Annual	After two successive tests indicate mass emission rates between 50% and 80 % of weight emission standard	Once/2 years
Annual	Any tests indicates a mass emission rate ≥80% of weight emission standard	Annual
Once/2 years	After two successive tests indicate mass emission rates ≤50% of weight emission standard	Once/3 years
Once/2 years	Any tests indicates a mass emission rate between 50% and 80 % of weight emission standard	Once/2 years

Once/2 years	Any tests indicates a mass emission rate ≥80% of weight emission standard	Annual
Once/3 years	Any tests indicates a mass emission rate ≤50% of weight emission standard	Once/3 years
Once/3 years	Any test indicates mass emission rates between 50% and 80 % of weight emission standard	Once/2 years
Once/3 years	Any test indicates a mass emission rate ≥80% of weight emission standard	Annual

[45CSR§2-8.1., 45CSR§2A-5.2.]
(Title V permit condition 4.3.10)

Recordkeeping Requirements

Records of the operating schedule and quantity and quality of fuel consumed shall be maintained on site for each fuel burning unit and made available to the Secretary or his duly authorized representative upon request. Such records shall include, but not be limited to the date and time of start-up and shutdown and for:

a. *Coal*, - ash and BTU analysis for each shipment and the quantity of fuel consumed on a daily basis,

b. *Propane* – quantity of fuel consumed on a monthly basis.

[45CSR§2-8.3.c., 45CSR§2A-7.1.a., 7.1.a.4. & 7.1.a.5.]
(Title V permit condition 4.4.1)

Records from any inspections and maintenance of the particulate matter removal system as a result of the I&M plan shall be maintained on site for at least five years.
[45CSR§30-5.1.c., State-Enforceable only.]
(Title V permit condition 4.4.2)

Reporting Requirements

The permittee shall comply with all notification requirements under 40 CFR 60.49a except that all required reports shall be certified to the USEPA Administrator and to the WV Department of Environmental Protection, Division of Air Quality Director in accordance with 40 CFR 60.49a(i).
[45CSR13/14 - Permit No. R13-1020B/R14-4B §(B)(2)(g)]
(Title V permit condition 4.5.1)

Compliance with the periodic exception reporting of permit condition 4.1.7. shall be demonstrated by quarterly reports in accordance with 40 CFR 60.7.c.
[45CSR16, 40 CFR 60.7]
(Title V permit condition 4.5.2)

Excess opacity periods resulting from any malfunction of Boiler A or Boiler B or their air pollution control equipment, meeting the following conditions may be reported on a quarterly basis unless otherwise required by the Secretary:

a. The excess opacity period does not exceed thirty (30) minutes within any twenty-four (24) hour period; and
b. Excess opacity does not exceed forty percent (40%).
[45CSR§2-9.3.a.]
(Title V permit condition 4.5.3)

Except as provided in permit condition 4.5.3. above, the owner or operator shall report to the Secretary by telephone, telefax, or e-mail any malfunction of Boiler A or Boiler B or their associated air pollution control equipment, which results in any excess particulate matter or excess opacity, by the end of the next business day after becoming aware of such condition. The owner or operator shall file a certified written report concerning the malfunction with the Secretary within thirty (30) days providing the following information:

a. A detailed explanation of the factors involved or causes of the malfunction;

b. The date, and time of duration (with starting and ending times) of the period of excess emissions;

c. An estimate of the mass of excess emissions discharged during the malfunction period;

d. The maximum opacity measured or observed during the malfunction;

e. Immediate remedial actions taken at the time of the malfunction to correct or mitigate the effects of the malfunction; and

f. A detailed explanation of the corrective measures or program that will be implemented to prevent a recurrence of the malfunction and a schedule for such implementation.
[45CSR§2-9.3.b.]
(Title V permit condition 4.5.4)

Acid Rain Program

Unit 1& Unit 2 are Phase II Acid Rain affected units under 45CSR33, as defined by 40 C.F.R § 72.6, and as such are required to meet the requirements of 40 C.F.R. Parts 72, 73, 74, 75, 76, 77 and 78. These requirements include, but are not limited to:

a. Hold an Acid Rain permit (Acid Rain Permit is included in Appendix D);

b. Hold allowances, as of the allowance transfer deadline, in the unit's compliance sub-account of not less than the total annual emissions of sulfur dioxide for the previous calendar year from the unit;

c. Comply with the applicable Acid Rain emissions for sulfur dioxide;

d. Comply with the applicable Acid Rain emissions for nitrogen oxides;

e. Comply with the monitoring requirements of 40 C.F.R. Part 75 and section 407 of the Clean Air Act of 1990 and regulations implementing section 407 of the Act;
f. Submit the reports and compliance certifications required under the Acid Rain Program, including those under 40 C.F.R. Part 72, Subpart I and 40 C.F.R. Part 75.
[45CSR33, 40 C.F.R. Parts 72, 73, 74, 75, 76, 77, 78.]
(Title V permit condition 4.5.5

Are you in compliance with all applicable requirements for this emission unit? _x_ Yes

If no, complete the **Schedule of Compliance Form** as **ATTACHMENT F**.

ATTACHMENT E

SOURCES FOR EMISSION POINT 2-E

FUEL HOPPERS

(BN-MH-2A, BN-MH-2B)

ATTACHMENT E - Emission Unit Form

Emission Unit Description

Emission unit ID number:	**Emission unit name:**	**List any control devices associated with this emission unit:**
BN-MH-2A, BN-MH-2B	Emission point ID – 2E, fuel hoppers	Partial Enclosure, Water spray

Provide a description of the emission unit (type, method of operation, design parameters, etc.):
The Emission Units BN-MH-2A, BN-MH-2B are the fuel hoppers.

Manufacturer:	**Model number:**	**Serial number:**

Construction date:	**Installation date:**	**Modification date(s):**
1989	1989	

Design Capacity (examples: furnaces - tons/hr, tanks - gallons):
BN-MH-2A, BN-MH-2B have a design capacity of 500 TPH/unit

Maximum Hourly Throughput:	**Maximum Annual Throughput:**	**Maximum Operating Schedule:**
BN-MH-2A, BN-MH-2B – 500 TPH/unit	BN-MH-2A, BN-MH-2B – 4,380,000 TPY	8760 hours

Fuel Usage Data **(fill out all applicable fields)**

Does this emission unit combust fuel? ___Yes _x_ No	**If yes, is it?** ___ Indirect Fired ___Direct Fired
Maximum design heat input and/or maximum horsepower rating: N/A	**Type and Btu/hr rating of burners:** N/A

List the primary fuel type(s) and if applicable, the secondary fuel type(s). For each fuel type listed, provide the maximum hourly and annual fuel usage for each.
N/A

Describe each fuel expected to be used during the term of the permit.

Fuel Type	Max. Sulfur Content	Max. Ash Content	BTU Value
N/A	N/A	N/A	N/A

Emissions Data		
Criteria Pollutants	Potential Emissions	
	PPH	TPY
Carbon Monoxide (CO)	N/A	N/A
Nitrogen Oxides (NO_X)	N/A	N/A
Lead (Pb)	N/A	N/A
Particulate Matter ($PM_{2.5}$)	N/A	N/A
Particulate Matter (PM_{10})	N/A	N/A
Total Particulate Matter (TSP)	1.10	4.82
Sulfur Dioxide (SO_2)	N/A	N/A
Volatile Organic Compounds (VOC)	N/A	N/A
Hazardous Air Pollutants	Potential Emissions	
	PPH	TPY
N/A	N/A	N/A
Regulated Pollutants other than Criteria and HAP	Potential Emissions	
	PPH	TPY
N/A	N/A	N/A

List the method(s) used to calculate the potential emissions (include dates of any stack tests conducted, versions of software used, source and dates of emission factors, etc.).

See Emission Calculations in Attachment I

Applicable Requirements

List all applicable requirements for this emission unit. For each applicable requirement, include the underlying rule/regulation citation and/or construction permit with the condition number. (*Note: Title V permit condition numbers alone are not the underlying applicable requirements*). If an emission limit is calculated based on the type of source and design capacity or if a standard is based on a design parameter, this information should also be included.

Fuel handling/storage facilities shall consist of the following and particulate emissions shall be controlled as specified with maximum particulate emissions not to exceed the following:

	Type/Identity of Particulate Matter Control Equipment	Particulate Emission Limitation for Control Equipment Discharge lb/hr (gr/scf)
Fuel Receiver Hopper/Scalping Screen	Partial Enclosure with Water Dust Suppression System	
Fuel Conveyors	Partial Enclosure with Water Dust Suppression System	
Fuel Storage Pile; Tripper Conveyor, Reclaim	Water Dust Suppression System	
Screening Building	Full Enclosure and Evacuation to Baghouse 4C	2.12 (0.015)
Crusher Building	Full Enclosure and Evacuation to Baghouse 5C	3.02 (0.015)
Four (4) 800 Ton Fuel Bunkers (2 Per Boiler)	Full Enclosure and Evacuation to Baghouse 7C and 13C	1.54 (0.015)

[45CSR13/14 - Permit No. R13-1020B/R14-4B §(A)(2)] (Title V condition 5.1.1)

Visible emissions shall not exceed twenty percent (20%) opacity from the fuel receiving hoppers, fuel storage building, coal crushers, fuel feeders, fuel conveyors, fuel screens, fuel storage bunkers, all associated fuel transfer points, and/or particulate matter capture and control devices associated with this equipment. *Compliance with this streamlined condition will ensure compliance with 45CSR16, 40 C.F.R. § 60.11(c), 40 C.F.R. § 60.252(c) (Subpart Y)*

[45CSR13/14 - Permit No. R13-1020B/R14-4B §(B)(2)e)] (Title V condition 5.1.2)

At all times, including periods of startup, shutdown, and malfunction, any affected facility [*coal equipment as defined in 40 CFR Subpart Y*] including associated air pollution control equipment shall, to the extent practicable, be maintained and operated in a manner consistent with good air pollution control practice for minimizing emissions. Determination that acceptable operating and maintenance procedures are being used, will be based on information available to the Secretary which may include, but is not limited to, monitoring results, opacity observations, review of operating and maintenance procedures, and inspection of the source.

[45CSR16, 40 C.F.R. § 60.11(d)] (Title V condition 5.1.3)

____ Permit Shield

For all applicable requirements listed above, provide monitoring/testing/recordkeeping/reporting which shall be used to demonstrate compliance. If the method is based on a permit or rule, include the condition number or citation. (Note: Each requirement listed above must have an associated method of demonstrating compliance. If there is not already a required method in place, then a method must be proposed.)

The permittee shall conduct visible emission evaluations as follows for coal "affected facility" (*equipment listed in permit condition 5.1.2.*):

a. An initial visible emissions evaluation in accordance with 40 C.F.R. Part 60 Appendix A, Method 9 shall be performed within ninety (90) days of permit issuance for each affected facility with a visible emissions requirement in this permit, unless such evaluation was performed within the consecutive 12-month period preceding permit issuance. This initial evaluation shall consist of three 6-minute averages during one consecutive 60 minute period. The initial evaluation shall be conducted at each affected facility during the period of maximum expected visible emissions under normal unit and facility operations. A visible emissions evaluation shall be conducted for each affected facility at least once every consecutive 12-month period in accordance with 40 C.F.R. Part 60 Appendix A, Method 9. This annual evaluation shall consist of a minimum of 24 consecutive observations for each affected facility.

b. Each emissions unit with a visible emissions limit contained in this permit section shall be observed visually by a trained Method 22 observer at least each calendar week during periods of normal facility operation for a sufficient time interval to determine if the unit has any visible emissions. If visible emissions from any of the emissions units are observed during these weekly observations, or at any other time, that appear to exceed 50 percent of the allowable visible emission requirement for the emission unit, visible emissions evaluations in accordance with 40 C.F.R. Part 60 Appendix A, Method 9 shall be conducted as soon as practicable, but no later than one (1) month from the time of the observation. A Method 9 evaluation shall not be required under this sub-section (5.3.1.b.) if the visible emissions condition is corrected within 24 hours; the emissions unit is operating at normal operating conditions; and, the cause and corrective measures taken are recorded.

c. If the initial, or any subsequent, visible emissions evaluation indicates visible emissions in excess of 50 percent of the allowable visible emissions requirement for a given emission unit, a visible emissions evaluation shall be performed for that unit at least once every consecutive 14-day period in accordance with 40 C.F.R. Part 60 Appendix A, Method 9. If subsequent visible emissions evaluations indicate visible emissions less than or equal to 50 percent of the allowable visible emissions requirement for the emission unit for 3 consecutive evaluation periods, the emission unit may comply with the visible emissions testing requirements of sub-section 5.3.1.b. above, in lieu of those established in this condition.
[45CSR§30-5.1.c.] (Title V condition 5.3.1)

Note: The term coal "Affected Facility" used in this permit means any of the following (NSPS or non-NSPS):
(1) Coal Processing and conveying equipment (including breakers and crushers)
(2) Coal Storage Systems.
(3) Coal Transfer and Loading Systems.

A record of each visible emissions observation shall be maintained on site, including any data required by 40 C.F.R. Part 60 Appendix A, Method 9. The record shall include, at a minimum, the date, time, name of the emission unit, the applicable visible emissions requirement, the results of the observation, and the name of the observer. Records shall state any maintenance or corrective actions taken as a result of the weekly inspections, and the times the fugitive dust control system(s) are inoperable and any corrective actions taken.
[45CSR§30-5.1.c.] (Title V condition 5.4.2)

Written reports of the results of all performance tests conducted to demonstrate compliance with 40 CFR §60.672 including opacity observations made using Method 9 to demonstrate compliance with 40 CFR §60.672(b) and (f), and reports of observations using Method 22 to demonstrate compliance with §60.672(e) shall be submitted to the Secretary.
[45CSR16, 40 CFR §60.676(f)] (Title V condition 5.5.1)

Are you in compliance with all applicable requirements for this emission unit? Yes

If no, complete the **Schedule of Compliance Form** as **ATTACHMENT F.**

ATTACHMENT E

SOURCES FOR EMISSION POINT 3-E

FUEL SCREENING BUILDING, VIBRATING SCREEN

(4-S, VS-MH-1)

ATTACHMENT E - Emission Unit Form

Emission Unit Description

Emission unit ID number:	**Emission unit name:**	**List any control devices associated with this emission unit:**
4-S, VS-MH-1	Sources for Emission Point 3-E Fuel Screening Building (4-S) Vibrating Screen (VS-MH-1)	4-S – full enclosure, baghouse 4-C VS-MH-1 – full enclosure

Provide a description of the emission unit (type, method of operation, design parameters, etc.):
The Emission Unit 4-S is the fuel screening building. The Emission Unit VS-MH-1 is the vibrating screen.

Manufacturer:	**Model number:**	**Serial number:**

Construction date:	**Installation date:**	**Modification date(s):**
1989	1989	

Design Capacity (examples: furnaces - tons/hr, tanks - gallons):
4-S has a design capacity of 325 TPH
VS-MH-1 has a design capacity of 250 TPH

Maximum Hourly Throughput:	**Maximum Annual Throughput:**	**Maximum Operating Schedule:**
4-S – 325 TPH VS-MH-1 – 250 TPH	4-S – 2,847,000 TPY VS-MH-1 – 2,190,000 TPY	8760 hours

Fuel Usage Data **(fill out all applicable fields)**

Does this emission unit combust fuel? ___Yes _x_ No	**If yes, is it?** ___ Indirect Fired ___Direct Fired
Maximum design heat input and/or maximum horsepower rating: N/A	**Type and Btu/hr rating of burners:** N/A

List the primary fuel type(s) and if applicable, the secondary fuel type(s). For each fuel type listed, provide the maximum hourly and annual fuel usage for each.
N/A

Describe each fuel expected to be used during the term of the permit.

Fuel Type	Max. Sulfur Content	Max. Ash Content	BTU Value
N/A	N/A	N/A	N/A

Emissions Data		
Criteria Pollutants	Potential Emissions	
	PPH	TPY
Carbon Monoxide (CO)	N/A	N/A
Nitrogen Oxides (NO_X)	N/A	N/A
Lead (Pb)	N/A	N/A
Particulate Matter ($PM_{2.5}$)	N/A	N/A
Particulate Matter (PM_{10})	N/A	N/A
Total Particulate Matter (TSP)	2.67	11.69
Sulfur Dioxide (SO_2)	N/A	N/A
Volatile Organic Compounds (VOC)	N/A	N/A
Hazardous Air Pollutants	Potential Emissions	
	PPH	TPY
N/A	N/A	N/A
Regulated Pollutants other than Criteria and HAP	Potential Emissions	
	PPH	TPY
N/A	N/A	N/A

List the method(s) used to calculate the potential emissions (include dates of any stack tests conducted, versions of software used, source and dates of emission factors, etc.).

See Emission Calculations in Attachment I

Applicable Requirements

List all applicable requirements for this emission unit. For each applicable requirement, include the underlying rule/regulation citation and/or construction permit with the condition number. (*Note: Title V permit condition numbers alone are not the underlying applicable requirements*). If an emission limit is calculated based on the type of source and design capacity or if a standard is based on a design parameter, this information should also be included.

Fuel handling/storage facilities shall consist of the following and particulate emissions shall be controlled as specified with maximum particulate emissions not to exceed the following:

	Type/Identity of Particulate Matter Control Equipment	Particulate Emission Limitation for Control Equipment Discharge lb/hr (gr/scf)
Fuel Receiver Hopper/Scalping Screen	Partial Enclosure with Water Dust Suppression System	
Fuel Conveyors	Partial Enclosure with Water Dust Suppression System	
Fuel Storage Pile; Tripper Conveyor, Reclaim	Water Dust Suppression System	
Screening Building	Full Enclosure and Evacuation to Baghouse 4C	2.12 (0.015)
Crusher Building	Full Enclosure and Evacuation to Baghouse 5C	3.02 (0.015)
Four (4) 800 Ton Fuel Bunkers (2 Per Boiler)	Full Enclosure and Evacuation to Baghouse 7C and 13C	1.54 (0.015)

[45CSR13/14 - Permit No. R13-1020B/R14-4B §(A)(2)] (Title V condition 5.1.1)

Visible emissions shall not exceed twenty percent (20%) opacity from the fuel receiving hoppers, fuel storage building, coal crushers, fuel feeders, fuel conveyors, fuel screens, fuel storage bunkers, all associated fuel transfer points, and/or particulate matter capture and control devices associated with this equipment. *Compliance with this streamlined condition will ensure compliance with 45CSR16, 40 C.F.R. § 60.11(c), 40 C.F.R. § 60.252(c) (Subpart Y)*

[45CSR13/14 - Permit No. R13-1020B/R14-4B §(B)(2)e)] (Title V condition 5.1.2)

At all times, including periods of startup, shutdown, and malfunction, any affected facility [*coal equipment as defined in 40 CFR Subpart Y*] including associated air pollution control equipment shall, to the extent practicable, be maintained and operated in a manner consistent with good air pollution control practice for minimizing emissions. Determination that acceptable operating and maintenance procedures are being used, will be based on information available to the Secretary which may include, but is not limited to, monitoring results, opacity observations, review of operating and maintenance procedures, and inspection of the source.

[45CSR16, 40 C.F.R. § 60.11(d)] (Title V condition 5.1.3)

____ Permit Shield

For all applicable requirements listed above, provide monitoring/testing/recordkeeping/reporting which shall be used to demonstrate compliance. If the method is based on a permit or rule, include the condition number or citation. (Note: Each requirement listed above must have an associated method of demonstrating compliance. If there is not already a required method in place, then a method must be proposed.)

The permittee shall conduct visible emission evaluations as follows for coal "affected facility" (*equipment listed in permit condition 5.1.2.*):

a. An initial visible emissions evaluation in accordance with 40 C.F.R. Part 60 Appendix A, Method 9 shall be performed within ninety (90) days of permit issuance for each affected facility with a visible emissions requirement in this permit, unless such evaluation was performed within the consecutive 12-month period preceding permit issuance. This initial evaluation shall consist of three 6-minute averages during one consecutive 60 minute period. The initial evaluation shall be conducted at each affected facility during the period of maximum expected visible emissions under normal unit and facility operations. A visible emissions evaluation shall be conducted for each affected facility at least once every consecutive 12-month period in accordance with 40 C.F.R. Part 60 Appendix A, Method 9. This annual evaluation shall consist of a minimum of 24 consecutive observations for each affected facility.

b. Each emissions unit with a visible emissions limit contained in this permit section shall be observed visually by a trained Method 22 observer at least each calendar week during periods of normal facility operation for a sufficient time interval to determine if the unit has any visible emissions. If visible emissions from any of the emissions units are observed during these weekly observations, or at any other time, that appear to exceed 50 percent of the allowable visible emission requirement for the emission unit, visible emissions evaluations in accordance with 40 C.F.R. Part 60 Appendix A, Method 9 shall be conducted as soon as practicable, but no later than one (1) month from the time of the observation. A Method 9 evaluation shall not be required under this sub-section (5.3.1.b.) if the visible emissions condition is corrected within 24 hours; the emissions unit is operating at normal operating conditions; and, the cause and corrective measures taken are recorded.

c. If the initial, or any subsequent, visible emissions evaluation indicates visible emissions in excess of 50 percent of the allowable visible emissions requirement for a given emission unit, a visible emissions evaluation shall be performed for that unit at least once every consecutive 14-day period in accordance with 40 C.F.R. Part 60 Appendix A, Method 9. If subsequent visible emissions evaluations indicate visible emissions less than or equal to 50 percent of the allowable visible emissions requirement for the emission unit for 3 consecutive evaluation periods, the emission unit may comply with the visible emissions testing requirements of sub-section 5.3.1.b. above, in lieu of those established in this condition.
[45CSR§30-5.1.c.] (Title V condition 5.3.1)

Note: The term coal "Affected Facility" used in this permit means any of the following (NSPS or non-NSPS):
(1) Coal Processing and conveying equipment (including breakers and crushers)
(2) Coal Storage Systems.
(3) Coal Transfer and Loading Systems.

A record of each visible emissions observation shall be maintained on site, including any data required by 40 C.F.R. Part 60 Appendix A, Method 9. The record shall include, at a minimum, the date, time, name of the emission unit, the applicable visible emissions requirement, the results of the observation, and the name of the observer. Records shall state any maintenance or corrective actions taken as a result of the weekly inspections, and the times the fugitive dust control system(s) are inoperable and any corrective actions taken.
[45CSR§30-5.1.c.] (Title V condition 5.4.2)

Written reports of the results of all performance tests conducted to demonstrate compliance with 40 CFR §60.672 including opacity observations made using Method 9 to demonstrate compliance with 40 CFR §60.672(b) and (f), and reports of observations using Method 22 to demonstrate compliance with §60.672(e) shall be submitted to the Secretary.
[45CSR16, 40 CFR §60.676(f)] (Title V condition 5.5.1)

Are you in compliance with all applicable requirements for this emission unit? Yes

If no, complete the **Schedule of Compliance Form** as **ATTACHMENT F.**

ATTACHMENT E

SOURCES FOR EMISSION POINT 4-E

CRUSHER BUILDING, FUEL HAMMERMILLS 2A, 2B, 2C, LIMESTONE HAMMERMILL CRUSHER 2B

(5-S, CR-MH-2A, CR-MH-2B, CR-MH-2C, CR-LH-2B)

ATTACHMENT E - Emission Unit Form

Emission Unit Description

Emission unit ID number:	**Emission unit name:**	**List any control devices associated with this emission unit:**
5-S, CR-MH-2A, CR-MH-2B, CR-MH-2C and CR-LH-2B	Sources for Emission Point ID 4-E	5-S – Baghouse 5C CR-MH-2A, CR-MH-2B,CR-MH-2C – Baghouse 5C, full enclosure CR-LH-2B – full enclosure

Provide a description of the emission unit (type, method of operation, design parameters, etc.):
The Emission Unit 5-S is the Crusher Building. Emission Units CR-MH-2A, CR-MH-2B andCR-MH-2C are the Fuel Hammermill 2A, Fuel Hammermill 2B and Fuel Hammermill 2C. Emission Unit CR-LH-2B is the Limestone Hammermill Crusher 2B.

Manufacturer:	**Model number:**	**Serial number:**

Construction date:	**Installation date:**	**Modification date(s):**
1989	1989	

Design Capacity (examples: furnaces - tons/hr, tanks - gallons):
5-S has a design capacity of 500 TPH.
CR-MH-2A, CR-MH-2B, CR-MH-2C have a design capacity of 250 TPH each
CR-LH-2B has a design capacity of 50 TPH

Maximum Hourly Throughput:	**Maximum Annual Throughput:**	**Maximum Operating Schedule:**
5-S – 500 TPH CR-MH-2A, CR-MH-2B, CR-MH-2C – 250 TPH each CR-LH-2B - 50 TPH	5-S– 4,380,000 TPY CR-MH-2A, CR-MH-2B, CR-MH-2C – 2,190,000 TPY each CR-LH-2B – 438,000	8760 hours

Fuel Usage Data **(fill out all applicable fields)**

Does this emission unit combust fuel? ___Yes _x_ No	**If yes, is it?** ___ Indirect Fired ___Direct Fired
Maximum design heat input and/or maximum horsepower rating: N/A	**Type and Btu/hr rating of burners:** N/A

List the primary fuel type(s) and if applicable, the secondary fuel type(s). For each fuel type listed, provide the maximum hourly and annual fuel usage for each.

Describe each fuel expected to be used during the term of the permit.

Fuel Type	Max. Sulfur Content	Max. Ash Content	BTU Value
N/A	N/A	N/A	N/A

Emissions Data		
Criteria Pollutants	Potential Emissions	
	PPH	TPY
Carbon Monoxide (CO)	N/A	N/A
Nitrogen Oxides (NO_X)	N/A	N/A
Lead (Pb)	N/A	N/A
Particulate Matter ($PM_{2.5}$)	N/A	N/A
Particulate Matter (PM_{10})	N/A	N/A
Total Particulate Matter (TSP)	3.28	14.37
Sulfur Dioxide (SO_2)	N/A	N/A
Volatile Organic Compounds (VOC)	N/A	N/A
Hazardous Air Pollutants	Potential Emissions	
	PPH	TPY
N/A	N/A	N/A
Regulated Pollutants other than Criteria and HAP	Potential Emissions	
	PPH	TPY
N/A	N/A	N/A

List the method(s) used to calculate the potential emissions (include dates of any stack tests conducted, versions of software used, source and dates of emission factors, etc.).

See Emission Calculations in Attachment I

Applicable Requirements

List all applicable requirements for this emission unit. For each applicable requirement, include the underlying rule/regulation citation and/or construction permit with the condition number. (*Note: Title V permit condition numbers alone are not the underlying applicable requirements*). If an emission limit is calculated based on the type of source and design capacity or if a standard is based on a design parameter, this information should also be included.

Fuel handling/storage facilities shall consist of the following and particulate emissions shall be controlled as specified with maximum particulate emissions not to exceed the following:

	Type/Identity of Particulate Matter Control Equipment	Particulate Emission Limitation for Control Equipment Discharge lb/hr (gr/scf)
Fuel Receiver Hopper/Scalping Screen	Partial Enclosure with Water Dust Suppression System	
Fuel Conveyors	Partial Enclosure with Water Dust Suppression System	
Fuel Storage Pile; Tripper Conveyor, Reclaim	Water Dust Suppression System	
Screening Building	Full Enclosure and Evacuation to Baghouse 4C	2.12 (0.015)
Crusher Building	Full Enclosure and Evacuation to Baghouse 5C	3.02 (0.015)
Four (4) 800 Ton Fuel Bunkers (2 Per Boiler)	Full Enclosure and Evacuation to Baghouse 7C and 13C	1.54 (0.015)

[45CSR13/14 - Permit No. R13-1020B/R14-4B §(A)(2)] (Title V condition 5.1.1)

Visible emissions shall not exceed twenty percent (20%) opacity from the fuel receiving hoppers, fuel storage building, coal crushers, fuel feeders, fuel conveyors, fuel screens, fuel storage bunkers, all associated fuel transfer points, and/or particulate matter capture and control devices associated with this equipment. *Compliance with this streamlined condition will ensure compliance with 45CSR16, 40 C.F.R. § 60.11(c), 40 C.F.R. § 60.252(c) (Subpart Y)*

[45CSR13/14 - Permit No. R13-1020B/R14-4B §(B)(2)e)] (Title V condition 5.1.2)

At all times, including periods of startup, shutdown, and malfunction, any affected facility [*coal equipment as defined in 40 CFR Subpart Y*] including associated air pollution control equipment shall, to the extent practicable, be maintained and operated in a manner consistent with good air pollution control practice for minimizing emissions. Determination that acceptable operating and maintenance procedures are being used, will be based on information available to the Secretary which may include, but is not limited to, monitoring results, opacity observations, review of operating and maintenance procedures, and inspection of the source.

[45CSR16, 40 C.F.R. § 60.11(d)] (Title V condition 5.1.3)

____ Permit Shield

For all applicable requirements listed above, provide monitoring/testing/recordkeeping/reporting which shall be used to demonstrate compliance. If the method is based on a permit or rule, include the condition number or citation. (Note: Each requirement listed above must have an associated method of demonstrating compliance. If there is not already a required method in place, then a method must be proposed.)

The permittee shall conduct visible emission evaluations as follows for coal "affected facility" (*equipment listed in permit condition 5.1.2.*):

a. An initial visible emissions evaluation in accordance with 40 C.F.R. Part 60 Appendix A, Method 9 shall be performed within ninety (90) days of permit issuance for each affected facility with a visible emissions requirement in this permit, unless such evaluation was performed within the consecutive 12-month period preceding permit issuance. This initial evaluation shall consist of three 6-minute averages during one consecutive 60 minute period. The initial evaluation shall be conducted at each affected facility during the period of maximum expected visible emissions under normal unit and facility operations. A visible emissions evaluation shall be conducted for each affected facility at least once every consecutive 12-month period in accordance with 40 C.F.R. Part 60 Appendix A, Method 9. This annual evaluation shall consist of a minimum of 24 consecutive observations for each affected facility.

b. Each emissions unit with a visible emissions limit contained in this permit section shall be observed visually by a trained Method 22 observer at least each calendar week during periods of normal facility operation for a sufficient time interval to determine if the unit has any visible emissions. If visible emissions from any of the emissions units are observed during these weekly observations, or at any other time, that appear to exceed 50 percent of the allowable visible emission requirement for the emission unit, visible emissions evaluations in accordance with 40 C.F.R. Part 60 Appendix A, Method 9 shall be conducted as soon as practicable, but no later than one (1) month from the time of the observation. A Method 9 evaluation shall not be required under this sub-section (5.3.1.b.) if the visible emissions condition is corrected within 24 hours; the emissions unit is operating at normal operating conditions; and, the cause and corrective measures taken are recorded.

c. If the initial, or any subsequent, visible emissions evaluation indicates visible emissions in excess of 50 percent of the allowable visible emissions requirement for a given emission unit, a visible emissions evaluation shall be performed for that unit at least once every consecutive 14-day period in accordance with 40 C.F.R. Part 60 Appendix A, Method 9. If subsequent visible emissions evaluations indicate visible emissions less than or equal to 50 percent of the allowable visible emissions requirement for the emission unit for 3 consecutive evaluation periods, the emission unit may comply with the visible emissions testing requirements of sub-section 5.3.1.b. above, in lieu of those established in this condition.
[45CSR§30-5.1.c.] (Title V condition 5.3.1)

Note: The term coal "Affected Facility" used in this permit means any of the following (NSPS or non-NSPS):
(1) Coal Processing and conveying equipment (including breakers and crushers)
(2) Coal Storage Systems.
(3) Coal Transfer and Loading Systems.

A record of each visible emissions observation shall be maintained on site, including any data required by 40 C.F.R. Part 60 Appendix A, Method 9. The record shall include, at a minimum, the date, time, name of the emission unit, the applicable visible emissions requirement, the results of the observation, and the name of the observer. Records shall state any maintenance or corrective actions taken as a result of the weekly inspections, and the times the fugitive dust control system(s) are inoperable and any corrective actions taken.
[45CSR§30-5.1.c.] (Title V condition 5.4.2)

Written reports of the results of all performance tests conducted to demonstrate compliance with 40 CFR §60.672 including opacity observations made using Method 9 to demonstrate compliance with 40 CFR §60.672(b) and (f), and reports of observations using Method 22 to demonstrate compliance with §60.672(e) shall be submitted to the Secretary.
[45CSR16, 40 CFR §60.676(f)] (Title V condition 5.5.1)

Are you in compliance with all applicable requirements for this emission unit? Yes

If no, complete the **Schedule of Compliance Form** as **ATTACHMENT F**.

ATTACHMENT E

SOURCES FOR EMISSION POINT 5-E

ASH STORAGE SILO

(BN-AH-3)

ATTACHMENT E - Emission Unit Form

Emission Unit Description

Emission unit ID number:	**Emission unit name:**	**List any control devices associated with this emission unit:**
BN-AH-3	Sources for Emission Point 5-E	BN-AH-3- baghouse 6C, wet scrubber

Provide a description of the emission unit (type, method of operation, design parameters, etc.):
The Emission Unit BN-AH-3 is the Ash storage Silo.

Manufacturer:	**Model number:**	**Serial number:**
Construction date: 1989	**Installation date:** 1989	**Modification date(s):**

Design Capacity (examples: furnaces - tons/hr, tanks - gallons):

BN-AH-3 has a design capacity of 7030 tons

Maximum Hourly Throughput:	**Maximum Annual Throughput:**	**Maximum Operating Schedule:**
BN-AH-3- 87.6 TPH	BN-AH-3- 767,376 TPY	8760 hours

Fuel Usage Data **(fill out all applicable fields)**

Does this emission unit combust fuel? ___Yes _x_ No	**If yes, is it?** ___ Indirect Fired ___Direct Fired
Maximum design heat input and/or maximum horsepower rating: N/A	**Type and Btu/hr rating of burners:** N/A

List the primary fuel type(s) and if applicable, the secondary fuel type(s). For each fuel type listed, provide the maximum hourly and annual fuel usage for each.
N/A

Describe each fuel expected to be used during the term of the permit.

Fuel Type	Max. Sulfur Content	Max. Ash Content	BTU Value
N/A	N/A	N/A	N/A

Emissions Data		
Criteria Pollutants	Potential Emissions	
	PPH	TPY
Carbon Monoxide (CO)	N/A	N/A
Nitrogen Oxides (NO_X)	N/A	N/A
Lead (Pb)	N/A	N/A
Particulate Matter ($PM_{2.5}$)	N/A	N/A
Particulate Matter (PM_{10})	N/A	N/A
Total Particulate Matter (TSP)	1.23	5.39
Sulfur Dioxide (SO_2)	N/A	N/A
Volatile Organic Compounds (VOC)	N/A	N/A
Hazardous Air Pollutants	Potential Emissions	
	PPH	TPY
N/A	N/A	N/A
Regulated Pollutants other than Criteria and HAP	Potential Emissions	
	PPH	TPY
N/A	N/A	N/A

List the method(s) used to calculate the potential emissions (include dates of any stack tests conducted, versions of software used, source and dates of emission factors, etc.).

See Emission Calculations in Attachment I

Applicable Requirements

List all applicable requirements for this emission unit. For each applicable requirement, include the underlying rule/regulation citation and/or construction permit with the condition number. (*Note: Title V permit condition numbers alone are not the underlying applicable requirements*). If an emission limit is calculated based on the type of source and design capacity or if a standard is based on a design parameter, this information should also be included.

The amount of ash trucked out of the facility shall not exceed 326 tons per hour nor 1,016,013 tons per year. Compliance with the throughput limit shall be determined using a rolling yearly total.
[45CSR13 - Permit No. R13-2075C §(A)(2)]
(Title V permit condition 5.1.9)

Ash transfer, storage and loading facilities shall consist of the following and particulate emissions from the entire system shall be controlled as specified with maximum particulate emissions not to exceed the following:

	Type/Identity of Particulate Matter Control Equipment	Particulate Emission Limitation for Control Equipment Discharge lb/hr (gr/scf)
Two (2) Ash Separators	Evacuation to Baghouse 10C	0.81 (0.015)
7030 Ton Ash Silo	Baghouse 6C	1.23 (0.015)
Truck Loading	Pug Mill Type Mixers to Thoroughly Wet Ash Prior to Discharge to Truck: Water Scrubbers	

[45CSR13/14 - Permit No. R13-1020B/R14-4B §(A)(5)]
(Title V permit condition 5.1.11)

Fugitive Particulate Matter Control. No person shall cause, suffer, allow, or permit any source of fugitive particulate matter to operate that is not equipped with a fugitive particulate matter control system. This system shall be operated and maintained in such a manner as to minimize the emission of fugitive particulate matter. Sources of fugitive particulate matter associated with fuel burning units shall include, but not be limited to, the following:

a. Stockpiling of ash or fuel either in the open or in enclosures such as silos;

b. Transport of ash in vehicles or on conveying systems, to include spillage, tracking, or blowing of particulate matter from or by such vehicles or equipment; and

c. Ash or fuel handling systems and ash disposal areas.

[45CSR§2-5., 45CSR13/14 - Permit No. R13-1020B/R14-4B §(B)(2)(f)] (Title V permit condition 3.1.11)

For all applicable requirements listed above, provide monitoring/testing/recordkeeping/reporting which shall be used to demonstrate compliance. If the method is based on a permit or rule, include the condition number or citation. (Note: Each requirement listed above must have an associated method of demonstrating compliance. If there is not already a required method in place, then a method must be proposed.)

For the purposes of determining compliance with conditions 5.1.4., 5.1.5., 5.1.6. and 5.1.9., certified daily and monthly records of fuel and ash throughputs, and trucks utilized shall be maintained. Such records shall be retained by the permittee for at least five (5) years. Certified records shall be made available to the Director or his/her duly authorized representative upon.
[45CSR13 - Permit No. R13-2075C §(B)(5)]
(Title V permit condition 5.4.10

Are you in compliance with all applicable requirements for this emission unit? Yes

If no, complete the **Schedule of Compliance Form** as **ATTACHMENT F.**

ATTACHMENT E

SOURCES FOR EMISSION POINT 6-E, 12-E

FUEL STORAGE SILOS, NORTHEAST/NORTHWEST FUEL BUNKERS, SOUTHEAST/SOUTHWEST FUEL BUNKERS

(SILO 6A & 6B, BN-MH-1A1, BN-MH-1A2, BN-MH-1B1, BN-MH-1B2)

ATTACHMENT E - Emission Unit Form

Emission Unit Description

Emission unit ID number:	**Emission unit name:**	**List any control devices associated with this emission unit:**
Silo 6A, Silo 6B, BN-MH-1A1, BN-MH-1A2, BN-MH-1B1 and BN-MH-1B2	Sources for Emission Points 6-E & 12-E	Silo 6A & Silo 6B – Baghouse-8C BN-MH-1A1,BN-MH-1A2 – Baghouse 7C BN-MH-1B1, BN-MH-1B2 – Baghouse 13C

Provide a description of the emission unit (type, method of operation, design parameters, etc.):
The Emission Units Silo 6A and Silo 6B are the fuel storage silos that transfer fuel to Conveyor 1F. Emission Units BN-MH-1A1 and BN-MH-1A2 are the Northeast / Northwest Fuel Bunkers. Emission Units BN-MH-1B1 and BN-MH-1B2 are the Southeast / Southwest Fuel Bunkers.

Manufacturer:	**Model number:**	**Serial number:**

Construction date:	**Installation date:**	**Modification date(s):**
1989	1989	

Design Capacity (examples: furnaces - tons/hr, tanks - gallons):
Silo 6A and Silo 6B have a design capacity of 6000 tons.
BN-MH-1A1 and BN-MH-1A2 have a design capacity of 800 tons each
BN-MH-1B1 and BN-MH-1B2have a design capacity of 800 tons each

Maximum Hourly Throughput:	**Maximum Annual Throughput:**	**Maximum Operating Schedule:**
Silo 6A and Silo 6B – N/A BN-MH-1A1 and BN-MH-1A2 – 40 tons each BN-MH-1B1 and BN-MH-1B2 – 40 tons each	Silo 6A and Silo 6B – N/A BN-MH-1A1 and BN-MH-1A2 – 350,400 TPY each BN-MH-1B1 and BN-MH-1B2 – 350,400 TPY each	8760 hours

Fuel Usage Data **(fill out all applicable fields)**

Does this emission unit combust fuel? ___Yes _x_ No	**If yes, is it?** ___ Indirect Fired ___Direct Fired
Maximum design heat input and/or maximum horsepower rating: N/A	**Type and Btu/hr rating of burners:** N/A

List the primary fuel type(s) and if applicable, the secondary fuel type(s). For each fuel type listed, provide the maximum hourly and annual fuel usage for each.
N/A

Describe each fuel expected to be used during the term of the permit.

Describe each fuel expected to be used during the term of the permit.			
Fuel Type	Max. Sulfur Content	Max. Ash Content	BTU Value
N/A	N/A	N/A	N/A

Emissions Data

Criteria Pollutants	Potential Emissions	
	PPH	TPY
Carbon Monoxide (CO)	N/A	N/A
Nitrogen Oxides (NO_X)	N/A	N/A
Lead (Pb)	N/A	N/A
Particulate Matter ($PM_{2.5}$)	N/A	N/A
Particulate Matter (PM_{10})	N/A	N/A
Total Particulate Matter (TSP)	4.18	18.31
Sulfur Dioxide (SO_2)	N/A	N/A
Volatile Organic Compounds (VOC)	N/A	N/A

Hazardous Air Pollutants	Potential Emissions	
	PPH	TPY
N/A	N/A	N/A

Regulated Pollutants other than Criteria and HAP	Potential Emissions	
	PPH	TPY
N/A	N/A	N/A

List the method(s) used to calculate the potential emissions (include dates of any stack tests conducted, versions of software used, source and dates of emission factors, etc.).

See Emission Calculations in Attachment I

Applicable Requirements

List all applicable requirements for this emission unit. For each applicable requirement, include the underlying rule/regulation citation and/or construction permit with the condition number. (*Note: Title V permit condition numbers alone are not the underlying applicable requirements*). If an emission limit is calculated based on the type of source and design capacity or if a standard is based on a design parameter, this information should also be included.

Fuel handling/storage facilities shall consist of the following and particulate emissions shall be controlled as specified with maximum particulate emissions not to exceed the following:

	Type/Identity of Particulate Matter Control Equipment	Particulate Emission Limitation for Control Equipment Discharge lb/hr (gr/scf)
Fuel Receiver Hopper/Scalping Screen	Partial Enclosure with Water Dust Suppression System	
Fuel Conveyors	Partial Enclosure with Water Dust Suppression System	
Fuel Storage Pile; Tripper Conveyor, Reclaim	Water Dust Suppression System	
Screening Building	Full Enclosure and Evacuation to Baghouse 4C	2.12 (0.015)
Crusher Building	Full Enclosure and Evacuation to Baghouse 5C	3.02 (0.015)
Four (4) 800 Ton Fuel Bunkers (2 Per Boiler)	Full Enclosure and Evacuation to Baghouse 7C and 13C	1.54 (0.015)

[45CSR13/14 - Permit No. R13-1020B/R14-4B §(A)(2)] (Title V condition 5.1.1)

Visible emissions shall not exceed twenty percent (20%) opacity from the fuel receiving hoppers, fuel storage building, coal crushers, fuel feeders, fuel conveyors, fuel screens, fuel storage bunkers, all associated fuel transfer points, and/or particulate matter capture and control devices associated with this equipment. *Compliance with this streamlined condition will ensure compliance with 45CSR16, 40 C.F.R. § 60.11(c), 40 C.F.R. § 60.252(c) (Subpart Y)*

[45CSR13/14 - Permit No. R13-1020B/R14-4B §(B)(2)e)] (Title V condition 5.1.2)

At all times, including periods of startup, shutdown, and malfunction, any affected facility [*coal equipment as defined in 40 CFR Subpart Y*] including associated air pollution control equipment shall, to the extent practicable, be maintained and operated in a manner consistent with good air pollution control practice for minimizing emissions. Determination that acceptable operating and maintenance procedures are being used, will be based on information available to the Secretary which may include, but is not limited to, monitoring results, opacity observations, review of operating and maintenance procedures, and inspection of the source.

[45CSR16, 40 C.F.R. § 60.11(d)] (Title V condition 5.1.3)

____ Permit Shield

be used to demonstrate compliance. If the method is based on a permit or rule, include the condition number or citation. (Note: Each requirement listed above must have an associated method of demonstrating compliance. If there is not already a required method in place, then a method must be proposed.)

The permittee shall conduct visible emission evaluations as follows for coal "affected facility" (*equipment listed in permit condition 5.1.2.*):

a. An initial visible emissions evaluation in accordance with 40 C.F.R. Part 60 Appendix A, Method 9 shall be performed within ninety (90) days of permit issuance for each affected facility with a visible emissions requirement in this permit, unless such evaluation was performed within the consecutive 12-month period preceding permit issuance. This initial evaluation shall consist of three 6-minute averages during one consecutive 60 minute period. The initial evaluation shall be conducted at each affected facility during the period of maximum expected visible emissions under normal unit and facility operations. A visible emissions evaluation shall be conducted for each affected facility at least once every consecutive 12-month period in accordance with 40 C.F.R. Part 60 Appendix A, Method 9. This annual evaluation shall consist of a minimum of 24 consecutive observations for each affected facility.

b. Each emissions unit with a visible emissions limit contained in this permit section shall be observed visually by a trained Method 22 observer at least each calendar week during periods of normal facility operation for a sufficient time interval to determine if the unit has any visible emissions. If visible emissions from any of the emissions units are observed during these weekly observations, or at any other time, that appear to exceed 50 percent of the allowable visible emission requirement for the emission unit, visible emissions evaluations in accordance with 40 C.F.R. Part 60 Appendix A, Method 9 shall be conducted as soon as practicable, but no later than one (1) month from the time of the observation. A Method 9 evaluation shall not be required under this sub-section (5.3.1.b.) if the visible emissions condition is corrected within 24 hours; the emissions unit is operating at normal operating conditions; and, the cause and corrective measures taken are recorded.

c. If the initial, or any subsequent, visible emissions evaluation indicates visible emissions in excess of 50 percent of the allowable visible emissions requirement for a given emission unit, a visible emissions evaluation shall be performed for that unit at least once every consecutive 14-day period in accordance with 40 C.F.R. Part 60 Appendix A, Method 9. If subsequent visible emissions evaluations indicate visible emissions less than or equal to 50 percent of the allowable visible emissions requirement for the emission unit for 3 consecutive evaluation periods, the emission unit may comply with the visible emissions testing requirements of sub-section 5.3.1.b. above, in lieu of those established in this condition.
[45CSR§30-5.1.c.] (Title V condition 5.3.1)

Note: The term coal "Affected Facility" used in this permit means any of the following (NSPS or non-NSPS):
(1) Coal Processing and conveying equipment (including breakers and crushers)
(2) Coal Storage Systems.
(3) Coal Transfer and Loading Systems.

A record of each visible emissions observation shall be maintained on site, including any data required by 40 C.F.R. Part 60 Appendix A, Method 9. The record shall include, at a minimum, the date, time, name of the emission unit, the applicable visible emissions requirement, the results of the observation, and the name of the observer. Records shall state any maintenance or corrective actions taken as a result of the weekly inspections, and the times the fugitive dust control system(s) are inoperable and any corrective actions taken.
[45CSR§30-5.1.c.] (Title V condition 5.4.2)

Written reports of the results of all performance tests conducted to demonstrate compliance with 40 CFR §60.672 including opacity observations made using Method 9 to demonstrate compliance with 40 CFR §60.672(b) and (f), and reports of observations using Method 22 to demonstrate compliance with §60.672(e) shall be submitted to the Secretary.
[45CSR16, 40 CFR §60.676(f)] (Title V condition 5.5.1)

Are you in compliance with all applicable requirements for this emission unit? Yes

If no, complete the **Schedule of Compliance Form** as **ATTACHMENT F**.

ATTACHMENT E

SOURCES FOR EMISSION POINT 7-E

UNCRUSHED LIMESTONE STORAGE BIN

(BN-LH-2)

ATTACHMENT E - Emission Unit Form

Emission Unit Description

Emission unit ID number:	**Emission unit name:**	**List any control devices associated with this emission unit:**
BN-LH-2	Sources for emission point ID 7-E	Full enclosure

Provide a description of the emission unit (type, method of operation, design parameters, etc.):
The Emission Unit BN-LH-2 is the Uncrushed Limestone Storage Bin.

Manufacturer:	**Model number:**	**Serial number:**
Construction date: 1989	**Installation date:** 1989	**Modification date(s):**

Design Capacity (examples: furnaces - tons/hr, tanks - gallons):
BN-LH-2 has a design capacity of 1250 tons

Maximum Hourly Throughput:	**Maximum Annual Throughput:**	**Maximum Operating Schedule:**
BN-LH-2 – N/A	BN-LH-2 – N/A	8760 hours

Fuel Usage Data **(fill out all applicable fields)**

Does this emission unit combust fuel? ___Yes _x_ No	**If yes, is it?** ___ Indirect Fired ___Direct Fired
Maximum design heat input and/or maximum horsepower rating: N/A	**Type and Btu/hr rating of burners:** N/A

List the primary fuel type(s) and if applicable, the secondary fuel type(s). For each fuel type listed, provide the maximum hourly and annual fuel usage for each.
N/A

Describe each fuel expected to be used during the term of the permit.

Fuel Type	Max. Sulfur Content	Max. Ash Content	BTU Value
N/A	N/A	N/A	N/A

Emissions Data		
Criteria Pollutants	Potential Emissions	
	PPH	TPY
Carbon Monoxide (CO)	N/A	N/A
Nitrogen Oxides (NO_X)	N/A	N/A
Lead (Pb)	N/A	N/A
Particulate Matter ($PM_{2.5}$)	N/A	N/A
Particulate Matter (PM_{10})	N/A	N/A
Total Particulate Matter (TSP)	0.13	0.57
Sulfur Dioxide (SO_2)	N/A	N/A
Volatile Organic Compounds (VOC)	N/A	N/A
Hazardous Air Pollutants	Potential Emissions	
	PPH	TPY
N/A	N/A	N/A
Regulated Pollutants other than Criteria and HAP	Potential Emissions	
	PPH	TPY
N/A	N/A	N/A

List the method(s) used to calculate the potential emissions (include dates of any stack tests conducted, versions of software used, source and dates of emission factors, etc.).

See Emission Calculations in Attachment I

Applicable Requirements

List all applicable requirements for this emission unit. For each applicable requirement, include the underlying rule/regulation citation and/or construction permit with the condition number. (*Note: Title V permit condition numbers alone are not the underlying applicable requirements*). If an emission limit is calculated based on the type of source and design capacity or if a standard is based on a design parameter, this information should also be included.

Limestone receiving, handling, and storage facilities shall consist of the following and particulate emissions shall be controlled as specified with maximum particulate emissions not to exceed the following:

	Type/Identity of Particulate Matter Control Equipment	Particulate Emission Limitation for Control Equipment Discharge lb/hr (gr/scf)
Limestone/Fuel Hoppers	Partial Enclosure	
One (1) 1250 Ton Uncrushed Limestone Storage Silo	Full Enclosure	0.13 (0.015)
One (1) 1550 Ton Crushed Limestone Storage Silo	Full Enclosure and Evacuation to Baghouse 9C	0.53 (0.015)

[45CSR13/14 - Permit No. R13-1020B/R14-4B §(A)(4)]
(Title V permit condition 5.1.12)

For all applicable requirements listed above, provide monitoring/testing/recordkeeping/reporting which shall be used to demonstrate compliance. If the method is based on a permit or rule, include the condition number or citation. (Note: Each requirement listed above must have an associated method of demonstrating compliance. If there is not already a required method in place, then a method must be proposed.)

A record of each visible emissions observation shall be maintained on site, including any data required by 40 C.F.R. Part 60 Appendix A, Method 9. The record shall include, at a minimum, the date, time, name of the emission unit, the applicable visible emissions requirement, the results of the observation, and the name of the observer. Records shall state any maintenance or corrective actions taken as a result of the weekly inspections, and the times the fugitive dust control system(s) are inoperable and any corrective actions taken.
[45CSR§30-5.1.c.]
(Title V permit condition 5.4.2)

Written reports of the results of all performance tests conducted to demonstrate compliance with 40 CFR §60.672 including opacity observations made using Method 9 to demonstrate compliance with 40 CFR §60.672(b) and (f), and reports of observations using Method 22 to demonstrate compliance with §60.672(e) shall be submitted to the Secretary.
[45CSR16, 40 CFR §60.676(f)]
(Title V permit condition 5.5.1)

Are you in compliance with all applicable requirements for this emission unit? Yes

If no, complete the **Schedule of Compliance Form** as **ATTACHMENT F.**

ATTACHMENT E

SOURCES FOR EMISSION POINT 8-E

CRUSHED LIMESTONE STORAGE SILO

(BN-LH-3)

ATTACHMENT E - Emission Unit Form

Emission Unit Description

Emission unit ID number:	**Emission unit name:**	**List any control devices associated with this emission unit:**
BN-LH-3	Sources for Emission Point ID 8-E	Full Enclosure, Baghouse 9-C

Provide a description of the emission unit (type, method of operation, design parameters, etc.):
The Emission Unit BN-LH-3 is the Crushed Limestone Storage Silo

Manufacturer:	**Model number:**	**Serial number:**
Construction date: 1989	**Installation date:** 1989	**Modification date(s):**

Design Capacity (examples: furnaces - tons/hr, tanks - gallons):
BN-LH-3 has a design capacity of 1550 tons

Maximum Hourly Throughput:	**Maximum Annual Throughput:**	**Maximum Operating Schedule:**
N/A	N/A	

Fuel Usage Data **(fill out all applicable fields)**

Does this emission unit combust fuel? ___Yes _x_ No	**If yes, is it?** ___ Indirect Fired ___Direct Fired
Maximum design heat input and/or maximum horsepower rating: N/A	**Type and Btu/hr rating of burners:** N/A

List the primary fuel type(s) and if applicable, the secondary fuel type(s). For each fuel type listed, provide the maximum hourly and annual fuel usage for each.
N/A

Describe each fuel expected to be used during the term of the permit.

Fuel Type	Max. Sulfur Content	Max. Ash Content	BTU Value
N/A	N/A	N/A	N/A

Emissions Data		
Criteria Pollutants	Potential Emissions	
	PPH	TPY
Carbon Monoxide (CO)	N/A	N/A
Nitrogen Oxides (NO_X)	N/A	N/A
Lead (Pb)	N/A	N/A
Particulate Matter ($PM_{2.5}$)	N/A	N/A
Particulate Matter (PM_{10})	N/A	N/A
Total Particulate Matter (TSP)	0.53	2.32
Sulfur Dioxide (SO_2)	N/A	N/A
Volatile Organic Compounds (VOC)	N/A	N/A
Hazardous Air Pollutants	Potential Emissions	
	PPH	TPY
N/A	N/A	N/A
Regulated Pollutants other than Criteria and HAP	Potential Emissions	
	PPH	TPY
N/A	N/A	N/A

List the method(s) used to calculate the potential emissions (include dates of any stack tests conducted, versions of software used, source and dates of emission factors, etc.).

See Emission Calculations in Attachment I

Applicable Requirements

List all applicable requirements for this emission unit. For each applicable requirement, include the underlying rule/regulation citation and/or construction permit with the condition number. (*Note: Title V permit condition numbers alone are not the underlying applicable requirements*). If an emission limit is calculated based on the type of source and design capacity or if a standard is based on a design parameter, this information should also be included.

Limestone receiving, handling, and storage facilities shall consist of the following and particulate emissions shall be controlled as specified with maximum particulate emissions not to exceed the following:

	Type/Identity of Particulate Matter Control Equipment	Particulate Emission Limitation for Control Equipment Discharge lb/hr (gr/scf)
Limestone/Fuel Hoppers	Partial Enclosure	
One (1) 1250 Ton Uncrushed Limestone Storage Silo	Full Enclosure	0.13 (0.015)
One (1) 1550 Ton Crushed Limestone Storage Silo	Full Enclosure and Evacuation to Baghouse 9C	0.53 (0.015)

[45CSR13/14 - Permit No. R13-1020B/R14-4B §(A)(4)]
(Title V permit condition 5.1.12)

Particulate matter emissions shall be limited as follows:
a. Particulate matter stack emissions from the crushers, grinders, and belt conveyor transfer points shall not exceed 0.022 gr/dscf and 7 percent opacity. Any fugitive emissions from the crushers, grinders, and belt conveyor transfer points shall not exceed 10 percent opacity.
-OR
The vent from the building enclosing the crushers, grinders, and belt conveyor transfer points shall not exceed 0.022 gr/dscf and 7 percent opacity. The building shall not emit any visible fugitive emissions.
[45CSR16, 40 CFR §60.672(a) &(b), 40 CFR §60.672(e)]
(Title V permit condition 5.1.13)

Visible Emissions from Baghouse stack (BH-9C) controlling emissions from the limestone silos shall not exceed seven (7) percent opacity.
[45CSR16, 40 CFR § 60.672(f)]
(Title V permit condition 5.1.14)

For all applicable requirements listed above, provide monitoring/testing/recordkeeping/reporting which shall be used to demonstrate compliance. If the method is based on a permit or rule, include the condition number or citation. (Note: Each requirement listed above must have an associated method of demonstrating compliance. If there is not already a required method in place, then a method must be proposed.)

A record of each visible emissions observation shall be maintained on site, including any data required by 40 C.F.R. Part 60 Appendix A, Method 9. The record shall include, at a minimum, the date, time, name of the emission unit, the applicable visible emissions requirement, the results of the observation, and the name of the observer. Records shall state any maintenance or corrective actions taken as a result of the weekly inspections, and the times the fugitive dust control system(s) are inoperable and any corrective actions taken.
[45CSR§30-5.1.c.]
(Title V permit condition 5.4.2)

Written reports of the results of all performance tests conducted to demonstrate compliance with 40 CFR §60.672 including opacity observations made using Method 9 to demonstrate compliance with 40 CFR §60.672(b) and (f), and reports of observations using Method 22 to demonstrate compliance with §60.672(e) shall be submitted to the Secretary.
[45CSR16, 40 CFR §60.676(f)]
(Title V permit condition 5.5.1)

Compliance with the limestone particulate matter concentrations of permit condition 5.1.13. shall be determined using Reference Test Method 5 or Method 17 of 40 CFR 60 Appendix A as set forth in 40 CFR §60.675(b)(1).
[45CSR16, 40 CFR §60.675(b)(1)]
(Title V permit condition 5.3.2)

Compliance with the limestone opacity limits of permit condition 5.1.13.a. shall be determined using Reference Test Method 9 of 40 CFR 60 Appendix A and as set forth in 40 CFR §60.675(c)(1) & §60.675(c)(3).
[45CSR16, 40 CFR §60.675(c)(1) & §60.675(c)(3)]
(Title V permit condition 5.3.5)

Are you in compliance with all applicable requirements for this emission unit? Yes

If no, complete the **Schedule of Compliance Form** as **ATTACHMENT F**.

ATTACHMENT E

SOURCES FOR EMISSION POINT 9-E, 16-E

BOILER A ASH SEPARATOR, BOILER B ASH SEPARATOR

(F-AH-2A, F-AH-2B)

ATTACHMENT E - Emission Unit Form

Emission Unit Description

Emission unit ID number:	**Emission unit name:**	**List any control devices associated with this emission unit:**
F-AH-2A, F-AH-2B	Sources for Emission Point 9-E & 16-E	F-AH-2A, F-AH-2B - Full Enclosures

Provide a description of the emission unit (type, method of operation, design parameters, etc.):
The Emission Units F-AH-2A, F-AH-2B transfer ash from Filter/Separators A and B the Ash storage Silo (BN-AH-3).

Manufacturer:	**Model number:**	**Serial number:**
Construction date: 1989	**Installation date:** 1989	**Modification date(s):**

Design Capacity (examples: furnaces - tons/hr, tanks - gallons):
F-AH-2A, F-AH-2B have a design capacity of 50 TPH per unit

Maximum Hourly Throughput:	**Maximum Annual Throughput:**	**Maximum Operating Schedule:**
F-AH-2A, F-AH-2B - 50 TPH/unit	F-AH-2A, F-AH-2B – 438,000 TPY	8760 hours

Fuel Usage Data **(fill out all applicable fields)**

Does this emission unit combust fuel? ___Yes _x_ No	**If yes, is it?** ___ Indirect Fired ___Direct Fired
Maximum design heat input and/or maximum horsepower rating: N/A	**Type and Btu/hr rating of burners:** N/A

List the primary fuel type(s) and if applicable, the secondary fuel type(s). For each fuel type listed, provide the maximum hourly and annual fuel usage for each.
N/A

Describe each fuel expected to be used during the term of the permit.

Fuel Type	Max. Sulfur Content	Max. Ash Content	BTU Value
N/A	N/A	N/A	N/A

Emissions Data		
Criteria Pollutants	Potential Emissions	
	PPH	TPY
Carbon Monoxide (CO)	N/A	N/A
Nitrogen Oxides (NO_X)	N/A	N/A
Lead (Pb)	N/A	N/A
Particulate Matter ($PM_{2.5}$)	N/A	N/A
Particulate Matter (PM_{10})	N/A	N/A
Total Particulate Matter (TSP)	1.62	7.10
Sulfur Dioxide (SO_2)	N/A	N/A
Volatile Organic Compounds (VOC)	N/A	N/A
Hazardous Air Pollutants	Potential Emissions	
	PPH	TPY
N/A	N/A	N/A
Regulated Pollutants other than Criteria and HAP	Potential Emissions	
	PPH	TPY
N/A	N/A	N/A

List the method(s) used to calculate the potential emissions (include dates of any stack tests conducted, versions of software used, source and dates of emission factors, etc.).

See Emission Calculations in Attachment I

Applicable Requirements

List all applicable requirements for this emission unit. For each applicable requirement, include the underlying rule/regulation citation and/or construction permit with the condition number. (*Note: Title V permit condition numbers alone are not the underlying applicable requirements*). If an emission limit is calculated based on the type of source and design capacity or if a standard is based on a design parameter, this information should also be included.

The amount of ash trucked out of the facility shall not exceed 326 tons per hour nor 1,016,013 tons per year. Compliance with the throughput limit shall be determined using a rolling yearly total.
[45CSR13 - Permit No. R13-2075C §(A)(2)]
(Title V permit condition 5.1.9)

Ash transfer, storage and loading facilities shall consist of the following and particulate emissions from the entire system shall be controlled as specified with maximum particulate emissions not to exceed the following:

	Type/Identity of Particulate Matter Control Equipment	Particulate Emission Limitation for Control Equipment Discharge lb/hr (gr/scf)
Two (2) Ash Separators	Evacuation to Baghouse 10C	0.81 (0.015)
7030 Ton Ash Silo	Baghouse 6C	1.23 (0.015)
Truck Loading	Pug Mill Type Mixers to Thoroughly Wet Ash Prior to Discharge to Truck: Water Scrubbers	

[45CSR13/14 - Permit No. R13-1020B/R14-4B §(A)(5)]
(Title V permit condition 5.1.11)

____ Permit Shield

For all applicable requirements listed above, provide monitoring/testing/recordkeeping/reporting which shall be used to demonstrate compliance. If the method is based on a permit or rule, include the condition number or citation. (Note: Each requirement listed above must have an associated method of demonstrating compliance. If there is not already a required method in place, then a method must be proposed.)

For the purposes of determining compliance with conditions 5.1.4., 5.1.5., 5.1.6. and 5.1.9., certified daily and monthly records of fuel and ash throughputs, and trucks utilized shall be maintained. Such records shall be retained by the permittee for at least five (5) years. Certified records shall be made available to the Director or his/her duly authorized representative upon.
[45CSR13 - Permit No. R13-2075C §(B)(5)]
(Title V permit condition 5.4.10

Are you in compliance with all applicable requirements for this emission unit? Yes

If no, complete the **Schedule of Compliance Form** as **ATTACHMENT F**.

ATTACHMENT E

SOURCES FOR EMISSION POINT 11-E

LIMESTONE AND FUEL HOPPERS

(BN-LH-1A, BN-LH-1B)

ATTACHMENT E - Emission Unit Form

Emission Unit Description

Emission unit ID number:	**Emission unit name:**	**List any control devices associated with this emission unit:**
BN-LH-1A, BN-LH-1B	Sources for Emission Point ID 11-E	Partial enclosures

Provide a description of the emission unit (type, method of operation, design parameters, etc.):
The Emission Units BN-LH-1A and BN-LH-1B are the limestone and fuel hoppers.

Manufacturer:	**Model number:**	**Serial number:**
Construction date: 1989	**Installation date:** 1989	**Modification date(s):**

Design Capacity (examples: furnaces - tons/hr, tanks - gallons):
BN-LH-1A and BN-LH-1B have a design capacity of 100 TPH each

Maximum Hourly Throughput:	**Maximum Annual Throughput:**	**Maximum Operating Schedule:**
BN-LH-1A, BN-LH-1B - 100 TPH each	BN-LH-1A, BN-LH-1B - 876,000 TPY each	8760 hours

Fuel Usage Data **(fill out all applicable fields)**

Does this emission unit combust fuel? ___Yes _x_ No	**If yes, is it?** ___ Indirect Fired ___Direct Fired
Maximum design heat input and/or maximum horsepower rating: N/A	**Type and Btu/hr rating of burners:** N/A

List the primary fuel type(s) and if applicable, the secondary fuel type(s). For each fuel type listed, provide the maximum hourly and annual fuel usage for each.
N/A

Describe each fuel expected to be used during the term of the permit.

Fuel Type	Max. Sulfur Content	Max. Ash Content	BTU Value
N/A	N/A	N/A	N/A

Emissions Data		
Criteria Pollutants	Potential Emissions	
	PPH	TPY
Carbon Monoxide (CO)	N/A	N/A
Nitrogen Oxides (NO_X)	N/A	N/A
Lead (Pb)	N/A	N/A
Particulate Matter ($PM_{2.5}$)	N/A	N/A
Particulate Matter (PM_{10})	N/A	N/A
Total Particulate Matter (TSP)	0.11	0.48
Sulfur Dioxide (SO_2)	N/A	N/A
Volatile Organic Compounds (VOC)	N/A	N/A
Hazardous Air Pollutants	Potential Emissions	
	PPH	TPY
N/A	N/A	N/A
Regulated Pollutants other than Criteria and HAP	Potential Emissions	
	PPH	TPY
N/A	N/A	N/A

List the method(s) used to calculate the potential emissions (include dates of any stack tests conducted, versions of software used, source and dates of emission factors, etc.).

See Emission Calculations in Attachment I

Applicable Requirements

List all applicable requirements for this emission unit. For each applicable requirement, include the underlying rule/regulation citation and/or construction permit with the condition number. (*Note: Title V permit condition numbers alone are not the underlying applicable requirements*). If an emission limit is calculated based on the type of source and design capacity or if a standard is based on a design parameter, this information should also be included.

Limestone receiving, handling, and storage facilities shall consist of the following and particulate emissions shall be controlled as specified with maximum particulate emissions not to exceed the following:

	Type/Identity of Particulate Matter Control Equipment	Particulate Emission Limitation for Control Equipment Discharge lb/hr (gr/scf)
Limestone/Fuel Hoppers	Partial Enclosure	
One (1) 1250 Ton Uncrushed Limestone Storage Silo	Full Enclosure	0.13 (0.015)
One (1) 1550 Ton Crushed Limestone Storage Silo	Full Enclosure and Evacuation to Baghouse 9C	0.53 (0.015)

[[45CSR13/14 - Permit No. R13-1020B/R14-4B §(A)(4)] (Title V condition 5.1.12)

Fuel handling/storage facilities shall consist of the following and particulate emissions shall be controlled as specified with maximum particulate emissions not to exceed the following:

	Type/Identity of Particulate Matter Control Equipment	Particulate Emission Limitation for Control Equipment Discharge lb/hr (gr/scf)
Fuel Receiver Hopper/Scalping Screen	Partial Enclosure with Water Dust Suppression System	
Fuel Conveyors	Partial Enclosure with Water Dust Suppression System	
Fuel Storage Pile; Tripper Conveyor, Reclaim	Water Dust Suppression System	
Screening Building	Full Enclosure and Evacuation to Baghouse 4C	2.12 (0.015)
Crusher Building	Full Enclosure and Evacuation to Baghouse 5C	3.02 (0.015)
Four (4) 800 Ton Fuel Bunkers (2 Per Boiler)	Full Enclosure and Evacuation to Baghouse 7C and 13C	1.54 (0.015)

[45CSR13/14 - Permit No. R13-1020B/R14-4B §(A)(2)] (Title V condition 5.1.1)

Visible emissions shall not exceed twenty percent (20%) opacity from the fuel receiving hoppers, fuel storage building, coal crushers, fuel feeders, fuel conveyors, fuel screens, fuel storage bunkers, all associated fuel transfer points, and/or particulate matter capture and control devices associated with this equipment. *Compliance with this streamlined condition will ensure compliance with 45CSR16, 40 C.F.R. § 60.11(c), 40 C.F.R. § 60.252(c) (Subpart Y)*

[45CSR13/14 - Permit No. R13-1020B/R14-4B §(B)(2)e)] (Title V permit condition 5.1.2)

At all times, including periods of startup, shutdown, and malfunction, any affected facility [*coal equipment as defined in 40 CFR Subpart Y*] including associated air pollution control equipment shall, to the extent practicable, be maintained and operated in a manner consistent with good air pollution control practice for minimizing emissions. Determination that acceptable operating and maintenance procedures are being used, will be based on information available to the Secretary which may include, but is not limited to, monitoring results, opacity observations, review of operating and maintenance procedures, and inspection of the source.

[45CSR16, 40 C.F.R. § 60.11(d)] (Title V permit condition 5.1.3)

____ Permit Shield

For all applicable requirements listed above, provide monitoring/testing/recordkeeping/reporting which shall be used to demonstrate compliance. If the method is based on a permit or rule, include the condition number or citation. (Note: Each requirement listed above must have an associated method of demonstrating compliance. If there is not already a required method in place, then a method must be proposed.)

Recordkeeping Requirements

The permittee shall conduct visible emission evaluations as follows for coal "affected facility" (*equipment listed in permit condition 5.1.2.*):

a. An initial visible emissions evaluation in accordance with 40 C.F.R. Part 60 Appendix A, Method 9 shall be performed within ninety (90) days of permit issuance for each affected facility with a visible emissions requirement in this permit, unless such evaluation was performed within the consecutive 12-month period preceding permit issuance. This initial evaluation shall consist of three 6-minute averages during one consecutive 60 minute period. The initial evaluation shall be conducted at each affected facility during the period of maximum expected visible emissions under normal unit and facility operations. A visible emissions evaluation shall be conducted for each affected facility at least once every consecutive 12-month period in accordance with 40 C.F.R. Part 60 Appendix A, Method 9. This annual evaluation shall consist of a minimum of 24 consecutive observations for each affected facility.

b. Each emissions unit with a visible emissions limit contained in this permit section shall be observed visually by a trained Method 22 observer at least each calendar week during periods of normal facility operation for a sufficient time interval to determine if the unit has any visible emissions. If visible emissions from any of the emissions units are observed during these weekly observations, or at any other time, that appear to exceed 50 percent of the allowable visible emission requirement for the emission unit, visible emissions evaluations in accordance with 40 C.F.R. Part 60 Appendix A, Method 9 shall be conducted as soon as practicable, but no later than one (1) month from the time of the observation. A Method 9 evaluation shall not be required under this sub-section (5.3.1.b.) if the visible emissions condition is corrected within 24 hours; the emissions unit is operating at normal operating conditions; and, the cause and corrective measures taken are recorded.

c. If the initial, or any subsequent, visible emissions evaluation indicates visible emissions in excess of 50 percent of the allowable visible emissions requirement for a given emission unit, a visible emissions evaluation shall be performed for that unit at least once every consecutive 14-day period in accordance with 40 C.F.R. Part 60 Appendix A, Method 9. If subsequent visible emissions evaluations indicate visible emissions less than or equal to 50 percent of the allowable visible emissions requirement for the emission unit for 3 consecutive evaluation periods, the emission unit may comply with the visible emissions testing requirements of sub-section 5.3.1.b. above, in lieu of those established in this condition.

[45CSR§30-5.1.c.] (Title V condition 5.3.1)

A record of each visible emissions observation shall be maintained on site, including any data required by 40 C.F.R. Part 60 Appendix A, Method 9. The record shall include, at a minimum, the date, time, name of the emission unit, the applicable visible emissions requirement, the results of the observation, and the name of the observer. Records shall state any maintenance or corrective actions taken as a result of the weekly inspections, and the times the fugitive dust control system(s) are inoperable and any corrective actions taken.
[45CSR§30-5.1.c.] (Title V condition 5.4.2)

Written reports of the results of all performance tests conducted to demonstrate compliance with 40 CFR §60.672 including opacity observations made using Method 9 to demonstrate compliance with 40 CFR §60.672(b) and (f), and reports of observations using Method 22 to demonstrate compliance with §60.672(e) shall be submitted to the Secretary.
[45CSR16, 40 CFR §60.676(f)] (Title V condition 5.5.1)

Are you in compliance with all applicable requirements for this emission unit? Yes

If no, complete the **Schedule of Compliance Form** as **ATTACHMENT F**.

ATTACHMENT E

SOURCES FOR EMISSION POINT 14-E

FUEL CONVEYORS

(1A, 1C, 1D, 1E, 1F,CV-MH-1G, CV-MH-1H, CV-MH-1I, CV-MH-1J, CV-MH-1K)

ATTACHMENT E - Emission Unit Form

Emission Unit Description

Emission unit ID number:	**Emission unit name:**	**List any control devices associated with this emission unit:**
1A, 1C, 1D, 1E, 1F, CV-MH-1G, CV-MH-1H, CV-MH-IJ, & CV-MH-1K	Sources for Emission Point ID 14-E	Partial enclosures – (1A, 1C, 1D, 1E, 1F) Full enclosure - CV-MH-1G, CV-MH-1H, CV-MH-IJ, & CV-MH-1K Baghouse 5C- CV-MH-1G

Provide a description of the emission unit (type, method of operation, design parameters, etc.):
The Emission Unit 1 A handles transfer of fuel from fuel hoppers to the fuel screening building. Unit 1C conveys fuel from the fuel screening building to the crushing building and Conveyor 1D. Unit 1D conveys fuel from Conveyor 1C to Conveyor 1E. Unit 1E conveys fuel to Silos 6A and 6B. Unit 1F conveys fuel from silos 6A and 6B to crushing building. Unit CV-MH-1G is the main fuel conveyor that transfers fuel to conveyors 1H, 1J and 1K (via 1H). Units CV-MH-1H, CV-MH-IJ and CV-MH-1K conveys fuel to BN-MH-1A1, 1A2, 1B1 & 1B2 fuel bunkers.

Manufacturer:	**Model number:**	**Serial number:**
Construction date: 1989	**Installation date:** 1989	**Modification date(s):**

Design Capacity (examples: furnaces - tons/hr, tanks - gallons):
1A, 1C, 1D, 1E have a design capacity of 500 TPH per unit.
1F, CV-MH-1G, CV-MH-1H, CV-MH-IJ, & CV-MH-1K have a design capacity of 400 TPH per unit

Maximum Hourly Throughput:	**Maximum Annual Throughput:**	**Maximum Operating Schedule:**
1A, 1C, 1D, 1E – 500 TPH/unit 1F, CV-MH-1G, CV-MH-1H, CV-MH-IJ, & CV-MH-1K – 400 TPH/unit	1A, 1C, 1D, 1E – 4,380,000 TPY per unit 1F, CV-MH-1G, CV-MH-1H, CV-MH-IJ, & CV-MH-1K – 3,504,000 TPY per unit	8760 hours

Fuel Usage Data **(fill out all applicable fields)**

Does this emission unit combust fuel? ___Yes _x_ No	**If yes, is it?** ___ Indirect Fired ___Direct Fired
Maximum design heat input and/or maximum horsepower rating: N/A	**Type and Btu/hr rating of burners:** N/A

List the primary fuel type(s) and if applicable, the secondary fuel type(s). For each fuel type listed, provide the maximum hourly and annual fuel usage for each.
N/A

Describe each fuel expected to be used during the term of the permit.

Fuel Type	Max. Sulfur Content	Max. Ash Content	BTU Value
N/A	N/A	N/A	N/A

Emissions Data

Criteria Pollutants	Potential Emissions	
	PPH	TPY
Carbon Monoxide (CO)	N/A	N/A
Nitrogen Oxides (NO_X)	N/A	N/A
Lead (Pb)	N/A	N/A
Particulate Matter ($PM_{2.5}$)	N/A	N/A
Particulate Matter (PM_{10})	N/A	N/A
Total Particulate Matter (TSP)	4.40	19.27
Sulfur Dioxide (SO_2)	N/A	N/A
Volatile Organic Compounds (VOC)	N/A	N/A
Hazardous Air Pollutants	Potential Emissions	
	PPH	TPY
N/A	N/A	N/A
Regulated Pollutants other than Criteria and HAP	Potential Emissions	
	PPH	TPY
N/A	N/A	N/A

List the method(s) used to calculate the potential emissions (include dates of any stack tests conducted, versions of software used, source and dates of emission factors, etc.).

See Emission Calculations in Attachment I

Applicable Requirements

List all applicable requirements for this emission unit. For each applicable requirement, include the underlying rule/regulation citation and/or construction permit with the condition number. (*Note: Title V permit condition numbers alone are not the underlying applicable requirements*). If an emission limit is calculated based on the type of source and design capacity or if a standard is based on a design parameter, this information should also be included.

Fuel handling/storage facilities shall consist of the following and particulate emissions shall be controlled as specified with maximum particulate emissions not to exceed the following:

	Type/Identity of Particulate Matter Control Equipment	Particulate Emission Limitation for Control Equipment Discharge lb/hr (gr/scf)
Fuel Receiver Hopper/Scalping Screen	Partial Enclosure with Water Dust Suppression System	
Fuel Conveyors	Partial Enclosure with Water Dust Suppression System	
Fuel Storage Pile; Tripper Conveyor, Reclaim	Water Dust Suppression System	
Screening Building	Full Enclosure and Evacuation to Baghouse 4C	2.12 (0.015)
Crusher Building	Full Enclosure and Evacuation to Baghouse 5C	3.02 (0.015)
Four (4) 800 Ton Fuel Bunkers (2 Per Boiler)	Full Enclosure and Evacuation to Baghouse 7C and 13C	1.54 (0.015)

[45CSR13/14 - Permit No. R13-1020B/R14-4B §(A)(2)] (Title V condition 5.1.1)

Visible emissions shall not exceed twenty percent (20%) opacity from the fuel receiving hoppers, fuel storage building, coal crushers, fuel feeders, fuel conveyors, fuel screens, fuel storage bunkers, all associated fuel transfer points, and/or particulate matter capture and control devices associated with this equipment. *Compliance with this streamlined condition will ensure compliance with 45CSR16, 40 C.F.R. § 60.11(c), 40 C.F.R. § 60.252(c) (Subpart Y)*

[45CSR13/14 - Permit No. R13-1020B/R14-4B §(B)(2)e)] (Title V condition 5.1.2)

At all times, including periods of startup, shutdown, and malfunction, any affected facility [*coal equipment as defined in 40 CFR Subpart Y*] including associated air pollution control equipment shall, to the extent practicable, be maintained and operated in a manner consistent with good air pollution control practice for minimizing emissions. Determination that acceptable operating and maintenance procedures are being used, will be based on information available to the Secretary which may include, but is not limited to, monitoring results, opacity observations, review of operating and maintenance procedures, and inspection of the source.

[45CSR16, 40 C.F.R. § 60.11(d)] (Title V condition 5.1.3)

____ Permit Shield

For all applicable requirements listed above, provide monitoring/testing/recordkeeping/reporting which shall

For all applicable requirements listed above, provide monitoring/testing/recordkeeping/reporting which shall be used to demonstrate compliance. If the method is based on a permit or rule, include the condition number or citation. (Note: Each requirement listed above must have an associated method of demonstrating compliance. If there is not already a required method in place, then a method must be proposed.)

The permittee shall conduct visible emission evaluations as follows for coal "affected facility" (*equipment listed in permit condition 5.1.2.*):

a. An initial visible emissions evaluation in accordance with 40 C.F.R. Part 60 Appendix A, Method 9 shall be performed within ninety (90) days of permit issuance for each affected facility with a visible emissions requirement in this permit, unless such evaluation was performed within the consecutive 12-month period preceding permit issuance. This initial evaluation shall consist of three 6-minute averages during one consecutive 60 minute period. The initial evaluation shall be conducted at each affected facility during the period of maximum expected visible emissions under normal unit and facility operations. A visible emissions evaluation shall be conducted for each affected facility at least once every consecutive 12-month period in accordance with 40 C.F.R. Part 60 Appendix A, Method 9. This annual evaluation shall consist of a minimum of 24 consecutive observations for each affected facility.

b. Each emissions unit with a visible emissions limit contained in this permit section shall be observed visually by a trained Method 22 observer at least each calendar week during periods of normal facility operation for a sufficient time interval to determine if the unit has any visible emissions. If visible emissions from any of the emissions units are observed during these weekly observations, or at any other time, that appear to exceed 50 percent of the allowable visible emission requirement for the emission unit, visible emissions evaluations in accordance with 40 C.F.R. Part 60 Appendix A, Method 9 shall be conducted as soon as practicable, but no later than one (1) month from the time of the observation. A Method 9 evaluation shall not be required under this sub-section (5.3.1.b.) if the visible emissions condition is corrected within 24 hours; the emissions unit is operating at normal operating conditions; and, the cause and corrective measures taken are recorded.

c. If the initial, or any subsequent, visible emissions evaluation indicates visible emissions in excess of 50 percent of the allowable visible emissions requirement for a given emission unit, a visible emissions evaluation shall be performed for that unit at least once every consecutive 14-day period in accordance with 40 C.F.R. Part 60 Appendix A, Method 9. If subsequent visible emissions evaluations indicate visible emissions less than or equal to 50 percent of the allowable visible emissions requirement for the emission unit for 3 consecutive evaluation periods, the emission unit may comply with the visible emissions testing requirements of sub-section 5.3.1.b. above, in lieu of those established in this condition.
[45CSR§30-5.1.c.] (Title V condition 5.3.1)

Note: The term coal "Affected Facility" used in this permit means any of the following (NSPS or non-NSPS):
(1) Coal Processing and conveying equipment (including breakers and crushers)
(2) Coal Storage Systems.
(3) Coal Transfer and Loading Systems.

A record of each visible emissions observation shall be maintained on site, including any data required by 40 C.F.R. Part 60 Appendix A, Method 9. The record shall include, at a minimum, the date, time, name of the emission unit, the applicable visible emissions requirement, the results of the observation, and the name of the observer. Records shall state any maintenance or corrective actions taken as a result of the weekly inspections, and the times the fugitive dust control system(s) are inoperable and any corrective actions taken.
[45CSR§30-5.1.c.] (Title V condition 5.4.2)

Written reports of the results of all performance tests conducted to demonstrate compliance with 40 CFR §60.672 including opacity observations made using Method 9 to demonstrate compliance with 40 CFR §60.672(b) and (f), and reports of observations using Method 22 to demonstrate compliance with §60.672(e) shall be submitted to the Secretary.
[45CSR16, 40 CFR §60.676(f)] (Title V condition 5.5.1)

Are you in compliance with all applicable requirements for this emission unit? Yes

If no, complete the **Schedule of Compliance Form** as **ATTACHMENT F.**

ATTACHMENT E

SOURCES FOR EMISSION POINT 15-E

FUEL STORAGE PILE

(P-1)

ATTACHMENT E - Emission Unit Form

Emission Unit Description

Emission unit ID number:	**Emission unit name:**	**List any control devices associated with this emission unit:**
P-1	Sources for Fugitive Emissions – 15-E	Wet spray

Provide a description of the emission unit (type, method of operation, design parameters, etc.):
P-1 is the fuel storage pile.

Manufacturer:	**Model number:**	**Serial number:**

Construction date:	**Installation date:**	**Modification date(s):**
P-1- 2000	P-1- 2000	

Design Capacity (examples: furnaces - tons/hr, tanks - gallons):

Maximum Hourly Throughput:	**Maximum Annual Throughput:**	**Maximum Operating Schedule:**
P-1 – 200 tons	P-1 - 1,752,000 TPY	8760 hours

Fuel Usage Data **(fill out all applicable fields)**

Does this emission unit combust fuel? ___Yes _x_ No	**If yes, is it?** ___ Indirect Fired ___Direct Fired
Maximum design heat input and/or maximum horsepower rating: N/A	**Type and Btu/hr rating of burners:** N/A

List the primary fuel type(s) and if applicable, the secondary fuel type(s). For each fuel type listed, provide the maximum hourly and annual fuel usage for each.
N/A

Describe each fuel expected to be used during the term of the permit.

Fuel Type	Max. Sulfur Content	Max. Ash Content	BTU Value
N/A	N/A	N/A	N/A

Emissions Data

Criteria Pollutants	Potential Emissions	
	PPH	TPY
Carbon Monoxide (CO)	N/A	N/A
Nitrogen Oxides (NO_X)	N/A	N/A

Emissions Data		
Criteria Pollutants	Potential Emissions	
	PPH	TPY
Carbon Monoxide (CO)	N/A	N/A
Nitrogen Oxides (NO_X)	N/A	N/A
Lead (Pb)	N/A	N/A
Particulate Matter ($PM_{2.5}$)	N/A	N/A
Particulate Matter (PM_{10})	N/A	N/A
Total Particulate Matter (TSP)	0.001	0.003
Sulfur Dioxide (SO_2)	N/A	N/A
Volatile Organic Compounds (VOC)	N/A	N/A
Hazardous Air Pollutants	Potential Emissions	
	PPH	TPY
N/A	N/A	N/A
Regulated Pollutants other than Criteria and HAP	Potential Emissions	
	PPH	TPY
N/A	N/A	N/A

List the method(s) used to calculate the potential emissions (include dates of any stack tests conducted, versions of software used, source and dates of emission factors, etc.).

See Emission Calculations in Attachment I

Applicable Requirements

List all applicable requirements for this emission unit. For each applicable requirement, include the underlying rule/regulation citation and/or construction permit with the condition number. (*Note: Title V permit condition numbers alone are not the underlying applicable requirements*). If an emission limit is calculated based on the type of source and design capacity or if a standard is based on a design parameter, this information should also be included.

Fuel handling/storage facilities shall consist of the following and particulate emissions shall be controlled as specified with maximum particulate emissions not to exceed the following:

	Type/Identity of Particulate Matter Control Equipment	Particulate Emission Limitation for Control Equipment Discharge lb/hr (gr/scf)
Fuel Receiver Hopper/Scalping Screen	Partial Enclosure with Water Dust Suppression System	
Fuel Conveyors	Partial Enclosure with Water Dust Suppression System	
Fuel Storage Pile; Tripper Conveyor, Reclaim	Water Dust Suppression System	
Screening Building	Full Enclosure and Evacuation to Baghouse 4C	2.12 (0.015)
Crusher Building	Full Enclosure and Evacuation to Baghouse 5C	3.02 (0.015)
Four (4) 800 Ton Fuel Bunkers (2 Per Boiler)	Full Enclosure and Evacuation to Baghouse 7C and 13C	1.54 (0.015)

[45CSR13/14 - Permit No. R13-1020B/R14-4B §(A)(2)] (Title V condition 5.1.1)

Visible emissions shall not exceed twenty percent (20%) opacity from the fuel receiving hoppers, fuel storage building, coal crushers, fuel feeders, fuel conveyors, fuel screens, fuel storage bunkers, all associated fuel transfer points, and/or particulate matter capture and control devices associated with this equipment. *Compliance with this streamlined condition will ensure compliance with 45CSR16, 40 C.F.R. § 60.11(c), 40 C.F.R. § 60.252(c) (Subpart Y)*

[45CSR13/14 - Permit No. R13-1020B/R14-4B §(B)(2)e)] (Title V condition 5.1.2)

At all times, including periods of startup, shutdown, and malfunction, any affected facility [*coal equipment as defined in 40 CFR Subpart Y*] including associated air pollution control equipment shall, to the extent practicable, be maintained and operated in a manner consistent with good air pollution control practice for minimizing emissions. Determination that acceptable operating and maintenance procedures are being used, will be based on information available to the Secretary which may include, but is not limited to, monitoring results, opacity observations, review of operating and maintenance procedures, and inspection of the source.

[45CSR16, 40 C.F.R. § 60.11(d)] (Title V condition 5.1.3)

____ Permit Shield

For all applicable requirements listed above, provide monitoring/testing/recordkeeping/reporting which shall be used to demonstrate compliance. If the method is based on a permit or rule, include the condition number or citation. (Note: Each requirement listed above must have an associated method of demonstrating compliance. If there is not already a required method in place, then a method must be proposed.)

The permittee shall conduct visible emission evaluations as follows for coal "affected facility" (*equipment listed in permit condition 5.1.2.*):

a. An initial visible emissions evaluation in accordance with 40 C.F.R. Part 60 Appendix A, Method 9 shall be performed within ninety (90) days of permit issuance for each affected facility with a visible emissions requirement in this permit, unless such evaluation was performed within the consecutive 12-month period preceding permit issuance. This initial evaluation shall consist of three 6-minute averages during one consecutive 60 minute period. The initial evaluation shall be conducted at each affected facility during the period of maximum expected visible emissions under normal unit and facility operations. A visible emissions evaluation shall be conducted for each affected facility at least once every consecutive 12-month period in accordance with 40 C.F.R. Part 60 Appendix A, Method 9. This annual evaluation shall consist of a minimum of 24 consecutive observations for each affected facility.

b. Each emissions unit with a visible emissions limit contained in this permit section shall be observed visually by a trained Method 22 observer at least each calendar week during periods of normal facility operation for a sufficient time interval to determine if the unit has any visible emissions. If visible emissions from any of the emissions units are observed during these weekly observations, or at any other time, that appear to exceed 50 percent of the allowable visible emission requirement for the emission unit, visible emissions evaluations in accordance with 40 C.F.R. Part 60 Appendix A, Method 9 shall be conducted as soon as practicable, but no later than one (1) month from the time of the observation. A Method 9 evaluation shall not be required under this sub-section (5.3.1.b.) if the visible emissions condition is corrected within 24 hours; the emissions unit is operating at normal operating conditions; and, the cause and corrective measures taken are recorded.

c. If the initial, or any subsequent, visible emissions evaluation indicates visible emissions in excess of 50 percent of the allowable visible emissions requirement for a given emission unit, a visible emissions evaluation shall be performed for that unit at least once every consecutive 14-day period in accordance with 40 C.F.R. Part 60 Appendix A, Method 9. If subsequent visible emissions evaluations indicate visible emissions less than or equal to 50 percent of the allowable visible emissions requirement for the emission unit for 3 consecutive evaluation periods, the emission unit may comply with the visible emissions testing requirements of sub-section 5.3.1.b. above, in lieu of those established in this condition.
[45CSR§30-5.1.c.] (Title V condition 5.3.1)

Note: The term coal "Affected Facility" used in this permit means any of the following (NSPS or non-NSPS):
(1) Coal Processing and conveying equipment (including breakers and crushers)
(2) Coal Storage Systems.
(3) Coal Transfer and Loading Systems.

A record of each visible emissions observation shall be maintained on site, including any data required by 40 C.F.R. Part 60 Appendix A, Method 9. The record shall include, at a minimum, the date, time, name of the emission unit, the applicable visible emissions requirement, the results of the observation, and the name of the observer. Records shall state any maintenance or corrective actions taken as a result of the weekly inspections, and the times the fugitive dust control system(s) are inoperable and any corrective actions taken.
[45CSR§30-5.1.c.] (Title V condition 5.4.2)

Written reports of the results of all performance tests conducted to demonstrate compliance with 40 CFR §60.672 including opacity observations made using Method 9 to demonstrate compliance with 40 CFR §60.672(b) and (f), and reports of observations using Method 22 to demonstrate compliance with §60.672(e) shall be submitted to the Secretary.
[45CSR16, 40 CFR §60.676(f)] (Title V condition 5.5.1)

Are you in compliance with all applicable requirements for this emission unit? Yes

If no, complete the **Schedule of Compliance Form** as **ATTACHMENT F.**

ATTACHMENT E

SOURCES FOR EMISSION POINT 17-E

TRUCK LOADING

(17-S)

ATTACHMENT E - Emission Unit Form

Emission Unit Description

Emission unit ID number:	**Emission unit name:**	**List any control devices associated with this emission unit:**
17-S	Sources for Emissions Point 17-E	17S – partial enclosure, wet suppression

Provide a description of the emission unit (type, method of operation, design parameters, etc.):
The Emission Unit 17-S includes emission from the Truck Loading facility.

Manufacturer:	**Model number:**	**Serial number:**

Construction date:	**Installation date:**	**Modification date(s):**
1999	1999	

Design Capacity (examples: furnaces - tons/hr, tanks - gallons):
17-S has a design capacity of 250 TPH.

Maximum Hourly Throughput:	**Maximum Annual Throughput:**	**Maximum Operating Schedule:**
17-S – 250 TPH	17-S – 2,190,000 TPY	8760 hours

Fuel Usage Data **(fill out all applicable fields)**

Does this emission unit combust fuel? ___Yes _x_ No	**If yes, is it?** ___ Indirect Fired ___Direct Fired
Maximum design heat input and/or maximum horsepower rating: N/A	**Type and Btu/hr rating of burners:** N/A

List the primary fuel type(s) and if applicable, the secondary fuel type(s). For each fuel type listed, provide the maximum hourly and annual fuel usage for each.
N/A

Describe each fuel expected to be used during the term of the permit.

Fuel Type	Max. Sulfur Content	Max. Ash Content	BTU Value
N/A	N/A	N/A	N/A

Emissions Data		
Criteria Pollutants	Potential Emissions	
	PPH	TPY
Carbon Monoxide (CO)	N/A	N/A
Nitrogen Oxides (NO_X)	N/A	N/A
Lead (Pb)	N/A	N/A
Particulate Matter ($PM_{2.5}$)	N/A	N/A
Particulate Matter (PM_{10})	N/A	N/A
Total Particulate Matter (TSP)	0.13	0.55
Sulfur Dioxide (SO_2)	N/A	N/A
Volatile Organic Compounds (VOC)	N/A	N/A
Hazardous Air Pollutants	Potential Emissions	
	PPH	TPY
N/A	N/A	N/A
Regulated Pollutants other than Criteria and HAP	Potential Emissions	
	PPH	TPY
N/A	N/A	N/A

List the method(s) used to calculate the potential emissions (include dates of any stack tests conducted, versions of software used, source and dates of emission factors, etc.).

See Emission Calculations in Attachment I

Applicable Requirements

List all applicable requirements for this emission unit. For each applicable requirement, include the underlying rule/regulation citation and/or construction permit with the condition number. (*Note: Title V permit condition numbers alone are not the underlying applicable requirements*). If an emission limit is calculated based on the type of source and design capacity or if a standard is based on a design parameter, this information should also be included.

Fuel & Ash
The number of truck trips utilized to haul the feedstock in and transport the ash out of the facility shall not exceed thirty (30) per hour nor 92,496 per year. For the purposes of this permit, one truck trip is defined as a vehicle utilized for the purpose of hauling feedstock or ash entering the facility with or without a load of feedstock and leaving the facility with or without a load of ash.
[45CSR13 - Permit No. R13-2075C §(A)(3)]
(Title V permit condition 5.1.6)

The permittee shall properly operate and maintain an underbody truck wash, rumble strips or employ other suitable measures to prevent the tracking of solids by vehicular activity from access and/or haulroads onto any public road or highway.
[45CSR13 - Permit No. R13-2075C §(A)(5)]
(Title V permit condition 5.1.7)

Trucks leaving the facility shall not be driven or moved on any public or private street, road, alley, highway or other thoroughfare unless such vehicle is so constructed or its cargo treated in such a manner as to prevent its contents from dripping, sifting, leaking or otherwise escaping there from, so as not to create conditions which result in particulate matter becoming airborne.
[45CSR13 - Permit No. R13-2075C §(A)(6)]
(Title V permit condition 5.1.8)

Ash
The amount of ash trucked out of the facility shall not exceed 326 tons per hour nor 1,016,013 tons per year. Compliance with the throughput limit shall be determined using a rolling yearly total.
[45CSR13 - Permit No. R13-2075C §(A)(2)]
(Title V permit condition 5.1.9)

____ Permit Shield

For all applicable requirements listed above, provide monitoring/testing/recordkeeping/reporting which shall be used to demonstrate compliance. If the method is based on a permit or rule, include the condition number or citation. (Note: Each requirement listed above must have an associated method of demonstrating compliance. If there is not already a required method in place, then a method must be proposed.)

For the purposes of determining compliance with conditions 5.1.4., 5.1.5., 5.1.6. and 5.1.9., certified daily and monthly records of fuel and ash throughputs, and trucks utilized shall be maintained. Such records shall be retained by the permittee for at least five (5) years. Certified records shall be made available to the Director or his/her duly authorized representative upon.
[45CSR13 - Permit No. R13-2075C §(B)(5)]
(Title V permit condition 5.4.1)

Are you in compliance with all applicable requirements for this emission unit? Yes

If no, complete the **Schedule of Compliance Form** as **ATTACHMENT F**.

ATTACHMENT E

SOURCES FOR EMISSION POINT 20-E, ONAN GENSET1, ONAN GENSET2, 21-E

DIESEL GENERATOR, ONAN GENERATOR SETS 1 & 2, DIESEL FIRE PUMP

(EG-1, 1-EG-GEN2, 1-EG-GEN-3, P-FP-2)

ATTACHMENT E - Emission Unit Form

Emission Unit Description

Emission unit ID number:	**Emission unit name:**	**List any control devices associated with this emission unit:**
EG-1, 1-EG-GEN2, 1-EG-GEN3, P-FP-2	Sources for Emissions Points 20-E, Onan GenSet1, Onan GenSet2, and Emission Point 21-E	None

Provide a description of the emission unit (type, method of operation, design parameters, etc.):
The Emission Unit EG-1 is a diesel generator. Emission Units 1-EG-GEN2 and 1-EG-GEN3 are 85GGHG Onan Generator sets. P-FP-2 is the diesel fire pump

Manufacturer:	**Model number:**	**Serial number:**
EG-1 – Kohur Power System 1-EG-GEN2 – Cummins Power Generation 1-EG-GEN3 – Cummins Power Generation P-FP-2 – Western Branch Diesel Ink, Detroit Diesel	EG-1: 100ROZJ71 1-EG-GEN2: GGHG-5006159 1-EG-GEN3: GGHG-5006160 P-FP-2: DCFRA-13590	EG-1: 262132 1-EG-GEN2: L010313781 1-EG-GEN3: LO10313779 P-FP-2: 54608

Construction date:	**Installation date:**	**Modification date(s):**
EG-1: 1989 1-EG-GEN2, 1-EG-GEN3: 2002 P-FP-2: 1989	EG-1: 1989 1-EG-GEN2, 1-EG-GEN3: 2002 P-FP-2: 1989	

Design Capacity (examples: furnaces - tons/hr, tanks - gallons):
EG-1 has a design capacity of 0.28 mmBtu/hr, and 124 bhp
1-EG-GEN2 and 1-EG-GEN3 have a design capacity of 164.2 bhp
P-FP-2 has a design capacity of 0.42 mmBtu/hr, 302 bhp.

Maximum Hourly Throughput:	**Maximum Annual Throughput:**	**Maximum Operating Schedule:**
N/A	N/A	8760 hours

***Fuel Usage Data* (fill out all applicable fields)**

Does this emission unit combust fuel? _x_ Yes ___ No	**If yes, is it?** ___ Indirect Fired _X_ Direct Fired
Maximum design heat input and/or maximum horsepower rating: EG-1 has a design capacity of 0.28 mmBtu/hr, and 124 bhp 1-EG-GEN2 and 1-EG-GEN3 have a design capacity of 164.2 bhp P-FP-2 has a design capacity of 0.42 mmBtu/hr, 302 bhp.	**Type and Btu/hr rating of burners:** N/A

List the primary fuel type(s) and if applicable, the secondary fuel type(s). For each fuel type listed, provide the maximum hourly and annual fuel usage for each.
The fuel for the diesel fire pump is diesel. The maximum hourly rate is 3 gallons per hour. The maximum annual fuel usage is 26,280 gallons, based on 8760 hours of operation in a year.
The maximum hourly rate for the diesel generator is 2 gallons per hour. The maximum annual fuel usage is 17,520 gallons, based on 8760 hours of operation in a year.
The fuel for the 85GGHG Onan Generator sets is propane. The maximum hourly rate is 7.5 gallons per hour. The maximum annual fuel usage is 65,700 gallons, based on 8760 hours of operation in a year.

Describe each fuel expected to be used during the term of the permit.			
Fuel Type	Max. Sulfur Content	Max. Ash Content	BTU Value
N/A	N/A	N/A	N/A

Emissions Data

Criteria Pollutants	Potential Emissions	
	PPH	TPY
Carbon Monoxide (CO)	31.865	7.967
Nitrogen Oxides (NO_X)	11.487	2.872
Lead (Pb)	0.00	0.00
Particulate Matter ($PM_{2.5}$)	N/A	N/A
Particulate Matter (PM_{10})	N/A	N/A
Total Particulate Matter (TSP)	0.2215	0.055
Sulfur Dioxide (SO_2)	0.2035	0.05
Volatile Organic Compounds (VOC)	0.652	0.163

Hazardous Air Pollutants	Potential Emissions	
	PPH	TPY
N/A	N/A	N/A

Regulated Pollutants other than Criteria and HAP	Potential Emissions	
	PPH	TPY
N/A	N/A	N/A

List the method(s) used to calculate the potential emissions (include dates of any stack tests conducted, versions of software used, source and dates of emission factors, etc.).

See Emission Calculations in Attachment I

Applicable Requirements

List all applicable requirements for this emission unit. For each applicable requirement, include the underlying rule/regulation citation and/or construction permit with the condition number. (*Note: Title V permit condition numbers alone are not the underlying applicable requirements*). If an emission limit is calculated based on the type of source and design capacity or if a standard is based on a design parameter, this information should also be included.

Pollutant	Emissions (lb/hr)	Emissions (tpy)
Nitrogen Oxides	4.2	1.05
Volatile Organic Compounds	0.2	0.05
Carbon Monoxide	15.6	3.90

[45CSR13 - Permit No. R13-2075C §(A)(11)]
(Title V permit condition 6.1.1)

The annual operating hours for each emergency generator shall not exceed 500 hours.
[45CSR13 - Permit No. R13-2075C Application page 2 of 4 item 16]
(Title V permit condition 6.1.2)

For all applicable requirements listed above, provide monitoring/testing/recordkeeping/reporting which shall be used to demonstrate compliance. If the method is based on a permit or rule, include the condition number or citation. (Note: Each requirement listed above must have an associated method of demonstrating compliance. If there is not already a required method in place, then a method must be proposed.)

Recordkeeping Requirements

For the purposes of determining compliance with conditions 6.1.1. and 6.1.2., certified daily and monthly records of emergency generator usage (hours of operation) shall be maintained. Such records shall be retained by the permittee for at least five (5) years. Certified records shall be made available to the Director or his/her duly authorized representative upon request.
[45 CSR§30-5.1.c., 45CSR13 - Permit No. R13-2075C §(B)(5)]
(Title V permit condition 6.4.1)

Are you in compliance with all applicable requirements for this emission unit? Yes

If no, complete the **Schedule of Compliance Form** as **ATTACHMENT F**.

ATTACHMENT E

SOURCES FOR EMISSION POINT 22-E

DIESEL AIR COMPRESSOR

(ME-CA-1)

ATTACHMENT E - Emission Unit Form

Emission Unit Description

Emission unit ID number:	**Emission unit name:**	**List any control devices associated with this emission unit:**
ME-CA-1	Sources for Emission Point ID 22-E	None

Provide a description of the emission unit (type, method of operation, design parameters, etc.):
The Emission Unit ME-CA-1 is the Diesel Air Compressor (portable).

Manufacturer:	**Model number:**	**Serial number:**
Ingerson-Rand	XP-825-W-CU	N/A
Construction date:	**Installation date:**	**Modification date(s):**
1989	1989	

Design Capacity (examples: furnaces - tons/hr, tanks - gallons):
ME-CA-1 has a design capacity of 0.70 mmBtu/hr, 275 bhp.

Maximum Hourly Throughput:	**Maximum Annual Throughput:**	**Maximum Operating Schedule:**
ME-CA-1– 0.70 mmBtu/hr, 275 bhp	ME-CA-1 – 0.70 mmBtu/hr, 275 bhp	8760 hours

Fuel Usage Data **(fill out all applicable fields)**

Does this emission unit combust fuel? _x_ Yes ___ No	**If yes, is it?** ___ Indirect Fired _x_ Direct Fired
Maximum design heat input and/or maximum horsepower rating: 0.70 mmBtu/hr, 275 bhp	**Type and Btu/hr rating of burners:** N/A

List the primary fuel type(s) and if applicable, the secondary fuel type(s). For each fuel type listed, provide the maximum hourly and annual fuel usage for each.

The fuel type for the air compressor is diesel fuel. The maximum hourly fuel usage is 5 gallons per hour. The maximum annual fuel usage is 43,800 gallons based on 8760 hours in a year.

Describe each fuel expected to be used during the term of the permit.

Fuel Type	Max. Sulfur Content	Max. Ash Content	BTU Value
diesel	N/A	N/A	N/A

Emissions Data		
Criteria Pollutants	Potential Emissions	
	PPH	TPY
Carbon Monoxide (CO)	0.665	0.166
Nitrogen Oxides (NO_X)	3.087	0.772
Lead (Pb)	0.00	0.00
Particulate Matter ($PM_{2.5}$)	N/A	N/A
Particulate Matter (PM_{10})	N/A	N/A
Total Particulate Matter (TSP)	0.2125	0.053
Sulfur Dioxide (SO_2)	0.203	0.051
Volatile Organic Compounds (VOC)	0.252	0.063
Hazardous Air Pollutants	Potential Emissions	
	PPH	TPY
N/A	N/A	N/A
Regulated Pollutants other than Criteria and HAP	Potential Emissions	
	PPH	TPY
N/A	N/A	N/A

List the method(s) used to calculate the potential emissions (include dates of any stack tests conducted, versions of software used, source and dates of emission factors, etc.).

See Emission Calculations in Attachment I

Applicable Requirements

List all applicable requirements for this emission unit. For each applicable requirement, include the underlying rule/regulation citation and/or construction permit with the condition number. (*Note: Title V permit condition numbers alone are not the underlying applicable requirements*). If an emission limit is calculated based on the type of source and design capacity or if a standard is based on a design parameter, this information should also be included.

No emissions unit-specific applicable requirements for this source.

____ Permit Shield

For all applicable requirements listed above, provide monitoring/testing/recordkeeping/reporting which shall be used to demonstrate compliance. If the method is based on a permit or rule, include the condition number or citation. (Note: Each requirement listed above must have an associated method of demonstrating compliance. If there is not already a required method in place, then a method must be proposed.)

No emissions unit-specific applicable requirements for this source.

Are you in compliance with all applicable requirements for this emission unit? Yes

If no, complete the **Schedule of Compliance Form** as **ATTACHMENT F**.

ATTACHMENT E

SOURCES FOR EMISSION POINT 23-E

PROPANE VAPORIZER

(PK-PR-1)

ATTACHMENT E - Emission Unit Form

Emission Unit Description

Emission unit ID number:	**Emission unit name:**	**List any control devices associated with this emission unit:**
PK-PR-1	Sources for Emission Point ID 23-E	None

Provide a description of the emission unit (type, method of operation, design parameters, etc.):
The Emission Unit PK-PR-1 is the Propane Vaporizor

Manufacturer:	**Model number:**	**Serial number:**
Alternate Energy System	WB-4500	WB-550
Construction date:	**Installation date:**	**Modification date(s):**
1989	1989	

Design Capacity (examples: furnaces - tons/hr, tanks - gallons):
PK-PR-1 has a design capacity of 5.4 mmBtu/hr.

Maximum Hourly Throughput:	**Maximum Annual Throughput:**	**Maximum Operating Schedule:**
PK-PR-1– 5.4 mmBtu/hr	PK-PR-1– 5.4 mmBtu/hr	8760 hours

Fuel Usage Data **(fill out all applicable fields)**

Does this emission unit combust fuel? __x_Yes ___ No	**If yes, is it?** ___ Indirect Fired _X_Direct Fired
Maximum design heat input and/or maximum horsepower rating: PK-PR-1 has a design capacity of 5.4 mmBtu/hr.	**Type and Btu/hr rating of burners:** The burner capacity is 5,400,000 Btu/hr.

List the primary fuel type(s) and if applicable, the secondary fuel type(s). For each fuel type listed, provide the maximum hourly and annual fuel usage for each.
The fuel type for the vaporizer is propane. The maximum hourly fuel usage is 58.82 gallons per hour. The annual fuel usage is 515,263 gallons based on 8760 hours of operation in a year.

Describe each fuel expected to be used during the term of the permit.

Fuel Type	Max. Sulfur Content	Max. Ash Content	BTU Value
N/A	N/A	N/A	N/A

Emissions Data		
Criteria Pollutants	Potential Emissions	
	PPH	TPY
Carbon Monoxide (CO)	0.44	1.93
Nitrogen Oxides (NO_X)	0.76	3.35
Lead (Pb)	0.00	0.00
Particulate Matter ($PM_{2.5}$)	N/A	N/A
Particulate Matter (PM_{10})	N/A	N/A
Total Particulate Matter (TSP)	0.07	0.28
Sulfur Dioxide (SO_2)	0.002	0.01
Volatile Organic Compounds (VOC)	0.03	0.12
Hazardous Air Pollutants	Potential Emissions	
	PPH	TPY
N/A	N/A	N/A
Regulated Pollutants other than Criteria and HAP	Potential Emissions	
	PPH	TPY
N/A	N/A	N/A

List the method(s) used to calculate the potential emissions (include dates of any stack tests conducted, versions of software used, source and dates of emission factors, etc.).

See Emission Calculations in Attachment I

Applicable Requirements

List all applicable requirements for this emission unit. For each applicable requirement, include the underlying rule/regulation citation and/or construction permit with the condition number. (*Note: Title V permit condition numbers alone are not the underlying applicable requirements*). If an emission limit is calculated based on the type of source and design capacity or if a standard is based on a design parameter, this information should also be included.

No emissions unit-specific applicable requirements for this source.

____ Permit Shield

For all applicable requirements listed above, provide monitoring/testing/recordkeeping/reporting which shall be used to demonstrate compliance. If the method is based on a permit or rule, include the condition number or citation. (Note: Each requirement listed above must have an associated method of demonstrating compliance. If there is not already a required method in place, then a method must be proposed.)

No emissions unit-specific applicable requirements for this source.

Are you in compliance with all applicable requirements for this emission unit? Yes

If no, complete the **Schedule of Compliance Form** as **ATTACHMENT F**.

ATTACHMENT E

SOURCES FOR EMISSION POINT 24-E, 25-E, 26-E, 27-E, 28-E, 29-E, 30-E, 31-E, 32-E, 33-E, 34-E, 35-E

FREEZE CONTROL AGENT TANK, DIESEL TANKS, KEROSENE TANKS, GASOLINE TANKES TURBINE LUBE OIL TANKS

(T-MH-4, T-MH-1, T-DS-2, T-PT-3, T-EG-1, T-MH-3, T-MH-5, T-PT-1, T-PT-2, T-MH-2, T-LO-3, T-LO-1)

ATTACHMENT E - Emission Unit Form

Emission Unit Description

Emission unit ID number:	**Emission unit name:**	**List any control devices associated with this emission unit:**
T-MH-4	Sources for Emission Point ID 24-E	None

Provide a description of the emission unit (type, method of operation, design parameters, etc.):
The Emission Unit T-MH-4 is the freeze control agent (diethylene glycol) tank

Manufacturer:	**Model number:**	**Serial number:**
Construction date: 1989	**Installation date:** 1989	**Modification date(s):**

Design Capacity (examples: furnaces - tons/hr, tanks - gallons):
T-MH-4 has a design capacity of 2000 gals.

Maximum Hourly Throughput:	**Maximum Annual Throughput:**	**Maximum Operating Schedule:**
N/A	N/A	N/A

Fuel Usage Data **(fill out all applicable fields)**

Does this emission unit combust fuel? ___Yes _x_ No	**If yes, is it?** ___ Indirect Fired ___Direct Fired
Maximum design heat input and/or maximum horsepower rating: N/A	**Type and Btu/hr rating of burners:** N/A

List the primary fuel type(s) and if applicable, the secondary fuel type(s). For each fuel type listed, provide the maximum hourly and annual fuel usage for each.
N/A

Describe each fuel expected to be used during the term of the permit.

Fuel Type	Max. Sulfur Content	Max. Ash Content	BTU Value
N/A	N/A	N/A	N/A

Emissions Data		
Criteria Pollutants	Potential Emissions	
	PPH	TPY
Carbon Monoxide (CO)	N/A	N/A
Nitrogen Oxides (NO_X)	N/A	N/A
Lead (Pb)	N/A	N/A
Particulate Matter ($PM_{2.5}$)	N/A	N/A
Particulate Matter (PM_{10})	N/A	N/A
Total Particulate Matter (TSP)	N/A	N/A
Sulfur Dioxide (SO_2)	N/A	N/A
Volatile Organic Compounds (VOC)	N/A	N/A
Hazardous Air Pollutants	Potential Emissions	
	PPH	TPY
N/A	N/A	N/A
Regulated Pollutants other than Criteria and HAP	Potential Emissions	
	PPH	TPY
N/A	N/A	N/A

List the method(s) used to calculate the potential emissions (include dates of any stack tests conducted, versions of software used, source and dates of emission factors, etc.).

See Emission Calculations in Attachment I

Applicable Requirements

List all applicable requirements for this emission unit. For each applicable requirement, include the underlying rule/regulation citation and/or construction permit with the condition number. (*Note: Title V permit condition numbers alone are not the underlying applicable requirements*). If an emission limit is calculated based on the type of source and design capacity or if a standard is based on a design parameter, this information should also be included.

No emissions unit-specific applicable requirements for this source.

____ Permit Shield

For all applicable requirements listed above, provide monitoring/testing/recordkeeping/reporting which shall be used to demonstrate compliance. If the method is based on a permit or rule, include the condition number or citation. (Note: Each requirement listed above must have an associated method of demonstrating compliance. If there is not already a required method in place, then a method must be proposed.)

No emissions unit-specific applicable requirements for this source.

Are you in compliance with all applicable requirements for this emission unit? Yes

If no, complete the **Schedule of Compliance Form** as **ATTACHMENT F**.

ATTACHMENT E - Emission Unit Form

Emission Unit Description

Emission unit ID number:	**Emission unit name:**	**List any control devices associated with this emission unit:**
T-MH-1, T-DS-2, T-PT-3, T-EG-1	Sources for Emission Points 25-E, 26-E, 27-E, 28-E	None

Provide a description of the emission unit (type, method of operation, design parameters, etc.):
The Emission Units T-MH-1, T-DS-2, T-PT-3, T-EG-1 are the Diesel tanks.

Manufacturer:	**Model number:**	**Serial number:**
	N/A	T-MH-1: P735741
Construction date: T-DS-2, T-PT-3, T-EG-1: 1989 T-MH-1: 2008	**Installation date:** T-DS-2, T-PT-3, T-EG-1: 1989 T-MH-1: 2008	**Modification date(s):**

Design Capacity (examples: furnaces - tons/hr, tanks - gallons):
T-MH-1 has a design capacity of 1000 gals
T-DS-2 has a design capacity of 450 gals
T-PT-3 has a design capacity of 275 gals.
T-EG-1 has a design capacity of 100 gals

Maximum Hourly Throughput:	**Maximum Annual Throughput:**	**Maximum Operating Schedule:**
T-MH-1 - NA T-DS-2 - NA T-PT-3 - NA T-EG-1 -NA	T-MH-1 - NA T-DS-2 - NA T-PT-3 - NA T-EG-1 -NA	8760 hours

Fuel Usage Data **(fill out all applicable fields)**

Does this emission unit combust fuel? ___Yes _x_ No	**If yes, is it?** ___ Indirect Fired ___Direct Fired
Maximum design heat input and/or maximum horsepower rating: N/A	**Type and Btu/hr rating of burners:** N/A

List the primary fuel type(s) and if applicable, the secondary fuel type(s). For each fuel type listed, provide the maximum hourly and annual fuel usage for each.

Describe each fuel expected to be used during the term of the permit.

Fuel Type	Max. Sulfur Content	Max. Ash Content	BTU Value
N/A	N/A	N/A	N/A

Emissions Data		
Criteria Pollutants	Potential Emissions	
	PPH	TPY
Carbon Monoxide (CO)	N/A	N/A
Nitrogen Oxides (NO_X)	N/A	N/A
Lead (Pb)	N/A	N/A
Particulate Matter ($PM_{2.5}$)	N/A	N/A
Particulate Matter (PM_{10})	N/A	N/A
Total Particulate Matter (TSP)	N/A	N/A
Sulfur Dioxide (SO_2)	N/A	N/A
Volatile Organic Compounds (VOC)	N/A	N/A
Hazardous Air Pollutants	Potential Emissions	
	PPH	TPY
N/A	N/A	N/A
Regulated Pollutants other than Criteria and HAP	Potential Emissions	
	PPH	TPY
N/A	N/A	N/A

List the method(s) used to calculate the potential emissions (include dates of any stack tests conducted, versions of software used, source and dates of emission factors, etc.).

See Emission Calculations in Attachment I

Applicable Requirements

List all applicable requirements for this emission unit. For each applicable requirement, include the underlying rule/regulation citation and/or construction permit with the condition number. (*Note: Title V permit condition numbers alone are not the underlying applicable requirements*). If an emission limit is calculated based on the type of source and design capacity or if a standard is based on a design parameter, this information should also be included.

No emissions unit-specific applicable requirements for this source.

____ Permit Shield

For all applicable requirements listed above, provide monitoring/testing/recordkeeping/reporting which shall be used to demonstrate compliance. If the method is based on a permit or rule, include the condition number or citation. (Note: Each requirement listed above must have an associated method of demonstrating compliance. If there is not already a required method in place, then a method must be proposed.)

No emissions unit-specific applicable requirements for this source.

Are you in compliance with all applicable requirements for this emission unit? Yes

If no, complete the **Schedule of Compliance Form** as **ATTACHMENT F**.

ATTACHMENT E - Emission Unit Form

Emission Unit Description

Emission unit ID number:	**Emission unit name:**	**List any control devices associated with this emission unit:**
T-MH-3, T-MH-5, T-PT-1, T-PT-2	Sources for Emission Points 29E, 30E, 31E, 32E	N/A

Provide a description of the emission unit (type, method of operation, design parameters, etc.):
The Emission Units T-MH-3, T-MH-5, T-PT-1, T-PT-2 are the Kerosene Tanks.

Manufacturer:	**Model number:**	**Serial number:**
	T-MH-3: MH5086	
Construction date: 1989	**Installation date:** 1989	**Modification date(s):**

Design Capacity (examples: furnaces - tons/hr, tanks - gallons):
T-MH-3 and T-MH-5 have a design capacity of 2000 gal./unit
T-PT-1 and T-PT-2 have a design capacity of 275 gal./unit

Maximum Hourly Throughput:	**Maximum Annual Throughput:**	**Maximum Operating Schedule:**
N/A	N/A	N/A

Fuel Usage Data **(fill out all applicable fields)**

Does this emission unit combust fuel? ___Yes _x_ No	**If yes, is it?** ___ Indirect Fired ___Direct Fired
Maximum design heat input and/or maximum horsepower rating: N/A	**Type and Btu/hr rating of burners:** N/A

List the primary fuel type(s) and if applicable, the secondary fuel type(s). For each fuel type listed, provide the maximum hourly and annual fuel usage for each.
N/A

Describe each fuel expected to be used during the term of the permit.

Fuel Type	Max. Sulfur Content	Max. Ash Content	BTU Value
N/A	N/A	N/A	N/A

Emissions Data		
Criteria Pollutants	Potential Emissions	
	PPH	TPY
Carbon Monoxide (CO)	N/A	N/A
Nitrogen Oxides (NO_X)	N/A	N/A
Lead (Pb)	N/A	N/A
Particulate Matter ($PM_{2.5}$)	N/A	N/A
Particulate Matter (PM_{10})	N/A	N/A
Total Particulate Matter (TSP)	N/A	N/A
Sulfur Dioxide (SO_2)	N/A	N/A
Volatile Organic Compounds (VOC)	N/A	N/A
Hazardous Air Pollutants	Potential Emissions	
	PPH	TPY
N/A	N/A	N/A
Regulated Pollutants other than Criteria and HAP	Potential Emissions	
	PPH	TPY
N/A	N/A	N/A

List the method(s) used to calculate the potential emissions (include dates of any stack tests conducted, versions of software used, source and dates of emission factors, etc.).

See Emission Calculations in Attachment I

Applicable Requirements

List all applicable requirements for this emission unit. For each applicable requirement, include the underlying rule/regulation citation and/or construction permit with the condition number. (*Note: Title V permit condition numbers alone are not the underlying applicable requirements*). If an emission limit is calculated based on the type of source and design capacity or if a standard is based on a design parameter, this information should also be included.

No emissions unit-specific applicable requirements for this source.

____ Permit Shield

For all applicable requirements listed above, provide monitoring/testing/recordkeeping/reporting which shall be used to demonstrate compliance. If the method is based on a permit or rule, include the condition number or citation. (Note: Each requirement listed above must have an associated method of demonstrating compliance. If there is not already a required method in place, then a method must be proposed.)

No emissions unit-specific testing, recordkeeping, reporting requirements for this source.

Are you in compliance with all applicable requirements for this emission unit? Yes

If no, complete the **Schedule of Compliance Form** as **ATTACHMENT F**.

ATTACHMENT E - Emission Unit Form

Emission Unit Description

Emission unit ID number:	**Emission unit name:**	**List any control devices associated with this emission unit:**
T-MH-2	Sources for Emission Point 33E	N/A

Provide a description of the emission unit (type, method of operation, design parameters, etc.):
The Emission Units T-MH-2 is the Gasoline Tank.

Manufacturer:	**Model number:**	**Serial number:**
	N/A	P735689
Construction date: 1989	**Installation date:** 2008	**Modification date(s):**

Design Capacity (examples: furnaces - tons/hr, tanks - gallons):
T-MH-2 has a design capacity of 1000 gals

Maximum Hourly Throughput:	**Maximum Annual Throughput:**	**Maximum Operating Schedule:**
N/A	N/A	N/A

Fuel Usage Data **(fill out all applicable fields)**

Does this emission unit combust fuel? ___Yes _x_ No	**If yes, is it?** ___ Indirect Fired ___Direct Fired
Maximum design heat input and/or maximum horsepower rating: N/A	**Type and Btu/hr rating of burners:** N/A

List the primary fuel type(s) and if applicable, the secondary fuel type(s). For each fuel type listed, provide the maximum hourly and annual fuel usage for each.
N/A

Describe each fuel expected to be used during the term of the permit.

Fuel Type	Max. Sulfur Content	Max. Ash Content	BTU Value
N/A	N/A	N/A	N/A

Emissions Data		
Criteria Pollutants	Potential Emissions	
	PPH	TPY
Carbon Monoxide (CO)	N/A	N/A
Nitrogen Oxides (NO_X)	N/A	N/A
Lead (Pb)	N/A	N/A
Particulate Matter ($PM_{2.5}$)	N/A	N/A
Particulate Matter (PM_{10})	N/A	N/A
Total Particulate Matter (TSP)	N/A	N/A
Sulfur Dioxide (SO_2)	N/A	N/A
Volatile Organic Compounds (VOC)	N/A	N/A
Hazardous Air Pollutants	Potential Emissions	
	PPH	TPY
N/A	N/A	N/A
Regulated Pollutants other than Criteria and HAP	Potential Emissions	
	PPH	TPY
N/A	N/A	N/A

List the method(s) used to calculate the potential emissions (include dates of any stack tests conducted, versions of software used, source and dates of emission factors, etc.).

See Emission Calculations in Attachment I

Applicable Requirements

List all applicable requirements for this emission unit. For each applicable requirement, include the underlying rule/regulation citation and/or construction permit with the condition number. (*Note: Title V permit condition numbers alone are not the underlying applicable requirements*). If an emission limit is calculated based on the type of source and design capacity or if a standard is based on a design parameter, this information should also be included.

No emissions unit-specific applicable requirements for this source.

____ Permit Shield

For all applicable requirements listed above, provide monitoring/testing/recordkeeping/reporting which shall be used to demonstrate compliance. If the method is based on a permit or rule, include the condition number or citation. (Note: Each requirement listed above must have an associated method of demonstrating compliance. If there is not already a required method in place, then a method must be proposed.)

No emissions unit-specific testing, recordkeeping, reporting requirements for this source.

Are you in compliance with all applicable requirements for this emission unit? Yes

If no, complete the **Schedule of Compliance Form** as **ATTACHMENT F**.

ATTACHMENT E - Emission Unit Form

Emission Unit Description

Emission unit ID number:	**Emission unit name:**	**List any control devices associated with this emission unit:**
T-LO-3, T-LO-1	Sources for Emission Point 34E, 35E	N/A

Provide a description of the emission unit (type, method of operation, design parameters, etc.):
The Emission Units T-LO-3 and T-LO-1 are the turbine lube oil tanks.

Manufacturer:	**Model number:**	**Serial number:**
	T-LO-3: 94447-01	T-LO-3: 162726
Construction date: 1989	**Installation date:** 1989	**Modification date(s):**

Design Capacity (examples: furnaces - tons/hr, tanks - gallons):
T-LO-3 and T-LO-1 have a design capacity of 3800 gals

Maximum Hourly Throughput:	**Maximum Annual Throughput:**	**Maximum Operating Schedule:**
N/A	N/A	N/A

Fuel Usage Data **(fill out all applicable fields)**

Does this emission unit combust fuel? ___Yes _x_ No	**If yes, is it?** ___ Indirect Fired ___Direct Fired
Maximum design heat input and/or maximum horsepower rating: N/A	**Type and Btu/hr rating of burners:** N/A

List the primary fuel type(s) and if applicable, the secondary fuel type(s). For each fuel type listed, provide the maximum hourly and annual fuel usage for each.
N/A

Describe each fuel expected to be used during the term of the permit.

Fuel Type	Max. Sulfur Content	Max. Ash Content	BTU Value
N/A	N/A	N/A	N/A

Emissions Data		
Criteria Pollutants	Potential Emissions	
	PPH	TPY
Carbon Monoxide (CO)	N/A	N/A
Nitrogen Oxides (NO_X)	N/A	N/A
Lead (Pb)	N/A	N/A
Particulate Matter ($PM_{2.5}$)	N/A	N/A
Particulate Matter (PM_{10})	N/A	N/A
Total Particulate Matter (TSP)	N/A	N/A
Sulfur Dioxide (SO_2)	N/A	N/A
Volatile Organic Compounds (VOC)	N/A	N/A
Hazardous Air Pollutants	Potential Emissions	
	PPH	TPY
N/A	N/A	N/A
Regulated Pollutants other than Criteria and HAP	Potential Emissions	
	PPH	TPY
N/A	N/A	N/A

List the method(s) used to calculate the potential emissions (include dates of any stack tests conducted, versions of software used, source and dates of emission factors, etc.).

See Emission Calculations in Attachment I

Applicable Requirements

List all applicable requirements for this emission unit. For each applicable requirement, include the underlying rule/regulation citation and/or construction permit with the condition number. (*Note: Title V permit condition numbers alone are not the underlying applicable requirements*). If an emission limit is calculated based on the type of source and design capacity or if a standard is based on a design parameter, this information should also be included.

No emissions unit-specific applicable requirements for this source.

____ Permit Shield

For all applicable requirements listed above, provide monitoring/testing/recordkeeping/reporting which shall be used to demonstrate compliance. If the method is based on a permit or rule, include the condition number or citation. (Note: Each requirement listed above must have an associated method of demonstrating compliance. If there is not already a required method in place, then a method must be proposed.)

No emissions unit-specific testing, recordkeeping, reporting requirements for this source.

Are you in compliance with all applicable requirements for this emission unit? Yes

If no, complete the **Schedule of Compliance Form** as **ATTACHMENT F**.

ATTACHMENT E

SOURCES FOR EMISSION POINT 36E, 37E, 38E, 39E, 40E, 41E

PROPANE TANKS

(T-PR-1, T-PR-2, T-PR-3, T-PR-4, T-PR-5, T-PR-6,)

ATTACHMENT E - Emission Unit Form

Emission Unit Description

Emission unit ID number:	**Emission unit name:**	**List any control devices associated with this emission unit:**
T-PR-1, T-PR-2, T-PR-3, T-PR-4, T-PR-5, T-PR-6	Sources for Emission Point 36E, 37E, 38E, 39E, 40E, 41E	N/A

Provide a description of the emission unit (type, method of operation, design parameters, etc.):
The Emission Units T-PR-1, T-PR-2, T-PR-3, T-PR-4, T-PR-5 and T-PR-6 are the propane tanks.

Manufacturer:	**Model number:**	**Serial number:**

Construction date:	**Installation date:**	**Modification date(s):**
1989	1989	

Design Capacity (examples: furnaces - tons/hr, tanks - gallons):
T-PR-1, T-PR-2, T-PR-3, T-PR-4, T-PR-5 and T-PR-6,have a design capacity of 30,000 gallons per unit.

Maximum Hourly Throughput:	**Maximum Annual Throughput:**	**Maximum Operating Schedule:**
N/A	N/A	N/A

Fuel Usage Data **(fill out all applicable fields)**

Does this emission unit combust fuel? ___Yes _x_ No	**If yes, is it?** ___ Indirect Fired ___Direct Fired
Maximum design heat input and/or maximum horsepower rating: N/A	**Type and Btu/hr rating of burners:** N/A

List the primary fuel type(s) and if applicable, the secondary fuel type(s). For each fuel type listed, provide the maximum hourly and annual fuel usage for each.
N/A

Describe each fuel expected to be used during the term of the permit.

Fuel Type	Max. Sulfur Content	Max. Ash Content	BTU Value
N/A	N/A	N/A	N/A

Emissions Data		
Criteria Pollutants	Potential Emissions	
	PPH	TPY
Carbon Monoxide (CO)	N/A	N/A
Nitrogen Oxides (NO_X)	N/A	N/A
Lead (Pb)	N/A	N/A
Particulate Matter ($PM_{2.5}$)	N/A	N/A
Particulate Matter (PM_{10})	N/A	N/A
Total Particulate Matter (TSP)	N/A	N/A
Sulfur Dioxide (SO_2)	N/A	N/A
Volatile Organic Compounds (VOC)	N/A	N/A
Hazardous Air Pollutants	Potential Emissions	
	PPH	TPY
N/A	N/A	N/A
Regulated Pollutants other than Criteria and HAP	Potential Emissions	
	PPH	TPY
N/A	N/A	N/A

List the method(s) used to calculate the potential emissions (include dates of any stack tests conducted, versions of software used, source and dates of emission factors, etc.).

See Emission Calculations in Attachment I

Applicable Requirements

List all applicable requirements for this emission unit. For each applicable requirement, include the underlying rule/regulation citation and/or construction permit with the condition number. (*Note: Title V permit condition numbers alone are not the underlying applicable requirements*). If an emission limit is calculated based on the type of source and design capacity or if a standard is based on a design parameter, this information should also be included.

No emissions unit-specific applicable requirements for this source.

____ Permit Shield

For all applicable requirements listed above, provide monitoring/testing/recordkeeping/reporting which shall be used to demonstrate compliance. If the method is based on a permit or rule, include the condition number or citation. (Note: Each requirement listed above must have an associated method of demonstrating compliance. If there is not already a required method in place, then a method must be proposed.)

No emissions unit-specific testing, recordkeeping, reporting requirements for this source.

Are you in compliance with all applicable requirements for this emission unit? Yes

If no, complete the **Schedule of Compliance Form** as **ATTACHMENT F.**

ATTACHMENT E

SOURCES FOR EMISSION POINT FUGITIVE

CONVEYORS

(CP-1, CP-2, CP-3, CP-4)

ATTACHMENT E - Emission Unit Form

Emission Unit Description

Emission unit ID number:	**Emission unit name:**	**List any control devices associated with this emission unit:**
CP-1 through CP-4	Sources for Fugitive Emissions CP-1 through CP-4, and P-1	Partial Enclosures

Provide a description of the emission unit (type, method of operation, design parameters, etc.):
The Emission Units CP-1 through CP-4 transfers coal or gob from the fuel hoppers to conveyors CP-2, CP-3 & CP-4. Conveyors CP-2, CP-3 & CP-4 transfers fuel from CP-1 to P-1, which is the fuel storage pile.

Manufacturer:	**Model number:**	**Serial number:**

Construction date:	**Installation date:**	**Modification date(s):**
1989 – CP-1 through CP-4	1989 – CP-1 through CP-4	

Design Capacity (examples: furnaces - tons/hr, tanks - gallons):
CP-1 through CP-4 have a design capacity of 500 TPH/unit

Maximum Hourly Throughput:	**Maximum Annual Throughput:**	**Maximum Operating Schedule:**
CP1 through CP4 - 500 TPH/unit	CP1 through CP4 – 4,380,000TPY	8760 hours

Fuel Usage Data **(fill out all applicable fields)**

Does this emission unit combust fuel? ___Yes _x_ No	**If yes, is it?** ___ Indirect Fired ___Direct Fired
Maximum design heat input and/or maximum horsepower rating: N/A	**Type and Btu/hr rating of burners:** N/A

List the primary fuel type(s) and if applicable, the secondary fuel type(s). For each fuel type listed, provide the maximum hourly and annual fuel usage for each.
N/A

Describe each fuel expected to be used during the term of the permit.

Fuel Type	Max. Sulfur Content	Max. Ash Content	BTU Value
N/A	N/A	N/A	N/A

Emissions Data		
Criteria Pollutants	Potential Emissions	
	PPH	TPY
Carbon Monoxide (CO)	N/A	N/A
Nitrogen Oxides (NO_X)	N/A	N/A
Lead (Pb)	N/A	N/A
Particulate Matter ($PM_{2.5}$)	N/A	N/A
Particulate Matter (PM_{10})	N/A	N/A
Total Particulate Matter (TSP)	2.20	9.64
Sulfur Dioxide (SO_2)	N/A	N/A
Volatile Organic Compounds (VOC)	N/A	N/A
Hazardous Air Pollutants	Potential Emissions	
	PPH	TPY
N/A	N/A	N/A
Regulated Pollutants other than Criteria and HAP	Potential Emissions	
	PPH	TPY
N/A	N/A	N/A

List the method(s) used to calculate the potential emissions (include dates of any stack tests conducted, versions of software used, source and dates of emission factors, etc.).

See Emission Calculations in Attachment I

Applicable Requirements

List all applicable requirements for this emission unit. For each applicable requirement, include the underlying rule/regulation citation and/or construction permit with the condition number. (*Note: Title V permit condition numbers alone are not the underlying applicable requirements*). If an emission limit is calculated based on the type of source and design capacity or if a standard is based on a design parameter, this information should also be included.

Fuel handling/storage facilities shall consist of the following and particulate emissions shall be controlled as specified with maximum particulate emissions not to exceed the following:

	Type/Identity of Particulate Matter Control Equipment	Particulate Emission Limitation for Control Equipment Discharge lb/hr (gr/scf)
Fuel Receiver Hopper/Scalping Screen	Partial Enclosure with Water Dust Suppression System	
Fuel Conveyors	Partial Enclosure with Water Dust Suppression System	
Fuel Storage Pile; Tripper Conveyor, Reclaim	Water Dust Suppression System	
Screening Building	Full Enclosure and Evacuation to Baghouse 4C	2.12 (0.015)
Crusher Building	Full Enclosure and Evacuation to Baghouse 5C	3.02 (0.015)
Four (4) 800 Ton Fuel Bunkers (2 Per Boiler)	Full Enclosure and Evacuation to Baghouse 7C and 13C	1.54 (0.015)

[45CSR13/14 - Permit No. R13-1020B/R14-4B §(A)(2)] (Title V condition 5.1.1)

Visible emissions shall not exceed twenty percent (20%) opacity from the fuel receiving hoppers, fuel storage building, coal crushers, fuel feeders, fuel conveyors, fuel screens, fuel storage bunkers, all associated fuel transfer points, and/or particulate matter capture and control devices associated with this equipment. *Compliance with this streamlined condition will ensure compliance with 45CSR16, 40 C.F.R. § 60.11(c), 40 C.F.R. § 60.252(c) (Subpart Y)*

[45CSR13/14 - Permit No. R13-1020B/R14-4B §(B)(2)e)] (Title V condition 5.1.2)

At all times, including periods of startup, shutdown, and malfunction, any affected facility [*coal equipment as defined in 40 CFR Subpart Y*] including associated air pollution control equipment shall, to the extent practicable, be maintained and operated in a manner consistent with good air pollution control practice for minimizing emissions. Determination that acceptable operating and maintenance procedures are being used, will be based on information available to the Secretary which may include, but is not limited to, monitoring results, opacity observations, review of operating and maintenance procedures, and inspection of the source.

[45CSR16, 40 C.F.R. § 60.11(d)] (Title V condition 5.1.3)

____ Permit Shield

For all applicable requirements listed above, provide monitoring/testing/recordkeeping/reporting which shall be used to demonstrate compliance. If the method is based on a permit or rule, include the condition number or citation. (Note: Each requirement listed above must have an associated method of demonstrating compliance. If there is not already a required method in place, then a method must be proposed.)

The permittee shall conduct visible emission evaluations as follows for coal "affected facility" (*equipment listed in permit condition 5.1.2.*):

a. An initial visible emissions evaluation in accordance with 40 C.F.R. Part 60 Appendix A, Method 9 shall be performed within ninety (90) days of permit issuance for each affected facility with a visible emissions requirement in this permit, unless such evaluation was performed within the consecutive 12-month period preceding permit issuance. This initial evaluation shall consist of three 6-minute averages during one consecutive 60 minute period. The initial evaluation shall be conducted at each affected facility during the period of maximum expected visible emissions under normal unit and facility operations. A visible emissions evaluation shall be conducted for each affected facility at least once every consecutive 12-month period in accordance with 40 C.F.R. Part 60 Appendix A, Method 9. This annual evaluation shall consist of a minimum of 24 consecutive observations for each affected facility.

b. Each emissions unit with a visible emissions limit contained in this permit section shall be observed visually by a trained Method 22 observer at least each calendar week during periods of normal facility operation for a sufficient time interval to determine if the unit has any visible emissions. If visible emissions from any of the emissions units are observed during these weekly observations, or at any other time, that appear to exceed 50 percent of the allowable visible emission requirement for the emission unit, visible emissions evaluations in accordance with 40 C.F.R. Part 60 Appendix A, Method 9 shall be conducted as soon as practicable, but no later than one (1) month from the time of the observation. A Method 9 evaluation shall not be required under this sub-section (5.3.1.b.) if the visible emissions condition is corrected within 24 hours; the emissions unit is operating at normal operating conditions; and, the cause and corrective measures taken are recorded.

c. If the initial, or any subsequent, visible emissions evaluation indicates visible emissions in excess of 50 percent of the allowable visible emissions requirement for a given emission unit, a visible emissions evaluation shall be performed for that unit at least once every consecutive 14-day period in accordance with 40 C.F.R. Part 60 Appendix A, Method 9. If subsequent visible emissions evaluations indicate visible emissions less than or equal to 50 percent of the allowable visible emissions requirement for the emission unit for 3 consecutive evaluation periods, the emission unit may comply with the visible emissions testing requirements of sub-section 5.3.1.b. above, in lieu of those established in this condition.
[45CSR§30-5.1.c.] (Title V condition 5.3.1)

Note: The term coal "Affected Facility" used in this permit means any of the following (NSPS or non-NSPS):
(1) Coal Processing and conveying equipment (including breakers and crushers)
(2) Coal Storage Systems.
(3) Coal Transfer and Loading Systems.

A record of each visible emissions observation shall be maintained on site, including any data required by 40 C.F.R. Part 60 Appendix A, Method 9. The record shall include, at a minimum, the date, time, name of the emission unit, the applicable visible emissions requirement, the results of the observation, and the name of the observer. Records shall state any maintenance or corrective actions taken as a result of the weekly inspections, and the times the fugitive dust control system(s) are inoperable and any corrective actions taken.
[45CSR§30-5.1.c.] (Title V condition 5.4.2)

Written reports of the results of all performance tests conducted to demonstrate compliance with 40 CFR §60.672 including opacity observations made using Method 9 to demonstrate compliance with 40 CFR §60.672(b) and (f), and reports of observations using Method 22 to demonstrate compliance with §60.672(e) shall be submitted to the Secretary.
[45CSR16, 40 CFR §60.676(f)] (Title V condition 5.5.1)

Are you in compliance with all applicable requirements for this emission unit? Yes

If no, complete the **Schedule of Compliance Form** as **ATTACHMENT F**.

ATTACHMENT E

SOURCES FOR EMISSION POINT FUGITIVE

CONVEYORS, LIMESTONE IMPACTOR 1, LIMESTONE DIRECT FIRED MILL

(CV-LH-1M, CV-LH-1A, CV-LH-1N, CR-LH-2A1)

ATTACHMENT E - Emission Unit Form

Emission Unit Description

Emission unit ID number:	**Emission unit name:**	**List any control devices associated with this emission unit:**
CV-LH-1M, CV-LH-1A, CV-LH-1N, CV-LH-2A1	Sources for Fugitive Emissions, and Fugitive Emission (vents inside)	CV-LH-1M - partial enclosure CV-LH-1A – full enclosure, baghouse 5C CV-LH-1N – full enclosure CV-LH-2A1 - full enclosure

Provide a description of the emission unit (type, method of operation, design parameters, etc.):
The Emission Unit CV-LH-1M transfers limestone and fuel hoppers to crusher building. Emission Unit CV-LH-1A is the Limestone Impactor 1. Emission Unit CV-LH-1N conveys limestone from the crusher building to the uncrushed limestone storage bin. Emission Unit CV-LH-2A1 is the Limestone direct fired mill.

Manufacturer:	**Model number:**	**Serial number:**
Construction date: 1989	**Installation date:** 1989	**Modification date(s):**

Design Capacity (examples: furnaces - tons/hr, tanks - gallons):
CV-LH-1M, CV-LH-1A, CV-LH-1N have a design capacity of 200 TPH/unit
CV-LH-2A1 has a design capacity of 50 TPH

Maximum Hourly Throughput:	**Maximum Annual Throughput:**	**Maximum Operating Schedule:**
CV-LH-1M, CV-LH-1A, CV-LH-1N – 200 TPH/unit CV-LH-2A1 – 50 TPH	CV-LH-1M, CV-LH-1A, CV-LH-1N – 1,752,000 TPY each CV-LH-2A1 – 438,000 TPY each	8760 hours

Fuel Usage Data **(fill out all applicable fields)**

Does this emission unit combust fuel? ___Yes _x_ No	**If yes, is it?** ___ Indirect Fired ___Direct Fired
Maximum design heat input and/or maximum horsepower rating: N/A	**Type and Btu/hr rating of burners:** N/A

List the primary fuel type(s) and if applicable, the secondary fuel type(s). For each fuel type listed, provide the maximum hourly and annual fuel usage for each.
N/A

Describe each fuel expected to be used during the term of the permit.			
Fuel Type	Max. Sulfur Content	Max. Ash Content	BTU Value
N/A	N/A	N/A	N/A

Emissions Data

Criteria Pollutants	Potential Emissions	
	PPH	TPY
Carbon Monoxide (CO)	N/A	N/A
Nitrogen Oxides (NO_X)	N/A	N/A
Lead (Pb)	N/A	N/A
Particulate Matter ($PM_{2.5}$)	N/A	N/A
Particulate Matter (PM_{10})	N/A	N/A
Total Particulate Matter (TSP)	3.82	16.73
Sulfur Dioxide (SO_2)	N/A	N/A
Volatile Organic Compounds (VOC)	N/A	N/A

Hazardous Air Pollutants	Potential Emissions	
	PPH	TPY
N/A	N/A	N/A

Regulated Pollutants other than Criteria and HAP	Potential Emissions	
	PPH	TPY
N/A	N/A	N/A

List the method(s) used to calculate the potential emissions (include dates of any stack tests conducted, versions of software used, source and dates of emission factors, etc.).

See Emission Calculations in Attachment I

Applicable Requirements

List all applicable requirements for this emission unit. For each applicable requirement, include the underlying rule/regulation citation and/or construction permit with the condition number. (*Note: Title V permit condition numbers alone are not the underlying applicable requirements*). If an emission limit is calculated based on the type of source and design capacity or if a standard is based on a design parameter, this information should also be included.

Limestone receiving, handling, and storage facilities shall consist of the following and particulate emissions shall be controlled as specified with maximum particulate emissions not to exceed the following:

	Type/Identity of Particulate Matter Control Equipment	Particulate Emission Limitation for Control Equipment Discharge lb/hr (gr/scf)
Limestone/Fuel Hoppers	Partial Enclosure	
One (1) 1250 Ton Uncrushed Limestone Storage Silo	Full Enclosure	0.13 (0.015)
One (1) 1550 Ton Crushed Limestone Storage Silo	Full Enclosure and Evacuation to Baghouse 9C	0.53 (0.015)

[45CSR13/14 - Permit No. R13-1020B/R14-4B §(A)(4)]
(Title V permit condition 5.1.12)

Particulate matter emissions shall be limited as follows:
a. Particulate matter stack emissions from the crushers, grinders, and belt conveyor transfer points shall not exceed 0.022 gr/dscf and 7 percent opacity. Any fugitive emissions from the crushers, grinders, and belt conveyor transfer points shall not exceed 10 percent opacity.
-OR
b.The vent from the building enclosing the crushers, grinders, and belt conveyor transfer points shall not exceed 0.022 gr/dscf and 7 percent opacity. The building shall not emit any visible fugitive emissions.
[45CSR16, 40 CFR §60.672(a) &(b), 40 CFR §60.672(e)]
(Title V permit condition 5.1.13)

Visible Emissions from Baghouse stack (BH-9C) controlling emissions from the limestone silos shall not exceed seven (7) percent opacity.
[45CSR16, 40 CFR § 60.672(f)]
(Title V permit condition 5.1.14)

____ Permit Shield

For all applicable requirements listed above, provide monitoring/testing/recordkeeping/reporting which shall be used to demonstrate compliance. If the method is based on a permit or rule, include the condition number or citation. (Note: Each requirement listed above must have an associated method of demonstrating compliance. If there is not already a required method in place, then a method must be proposed.)

Compliance with the limestone particulate matter concentrations of permit condition 5.1.13. shall be determined using Reference Test Method 5 or Method 17 of 40 CFR 60 Appendix A as set forth in 40 CFR §60.675(b)(1).
[45CSR16, 40 CFR §60.675(b)(1)]
(Title V permit condition 5.3.2)

Compliance with the limestone opacity limits of permit condition 5.1.13.a. shall be determined using Reference Test Method 9 of 40 CFR 60 Appendix A and as set forth in 40 CFR §60.675(c)(1) & §60.675(c)(3).
[45CSR16, 40 CFR §60.675(c)(1) & §60.675(c)(3)]
(Title V permit condition 5.3.3)

Compliance with the limestone opacity limits of permit condition 5.1.13.b. shall be determined using Reference Test Method 22 of 40 CFR 60 Appendix A while all limestone affected facilities inside the building are operating. The performance test for the crusher building shall be at least 75 minutes in duration, with each side of the building and the roof being observed for at least 15 minutes.
[45CSR16, 40 CFR §60.675(d)]
(Title V permit condition 5.3.4)

A record of each visible emissions observation shall be maintained on site, including any data required by 40 C.F.R. Part 60 Appendix A, Method 9. The record shall include, at a minimum, the date, time, name of the emission unit, the applicable visible emissions requirement, the results of the observation, and the name of the observer. Records shall state any maintenance or corrective actions taken as a result of the weekly inspections, and the times the fugitive dust control system(s) are inoperable and any corrective actions taken.
[45CSR§30-5.1.c.]
(Title V permit condition 5.4.2)

Written reports of the results of all performance tests conducted to demonstrate compliance with 40 CFR §60.672 including opacity observations made using Method 9 to demonstrate compliance with 40 CFR §60.672(b) and (f), and reports of observations using Method 22 to demonstrate compliance with §60.672(e) shall be submitted to the Secretary.
[45CSR16, 40 CFR §60.676(f)]
(Title V permit condition 5.5.1)

Are you in compliance with all applicable requirements for this emission unit? Yes

If no, complete the **Schedule of Compliance Form** as **ATTACHMENT F**.

ATTACHMENT E

SOURCES FOR FUGITIVE EMISSIONS

PAVED ROAD

(11-S)

ATTACHMENT E - Emission Unit Form

Emission Unit Description

Emission unit ID number:	**Emission unit name:**	**List any control devices associated with this emission unit:**
11-S	Source for fugitive emissions – paved roads	Water spray, vacuum sweeping

Provide a description of the emission unit (type, method of operation, design parameters, etc.):
The Emission Unit 11-S is the paved roadways areas around the facility and are maintained by water cleaning and vacuum sweeping.

Manufacturer:	**Model number:**	**Serial number:**

Construction date:	**Installation date:**	**Modification date(s):**
1989	1989	

Design Capacity (examples: furnaces - tons/hr, tanks - gallons):
11-S design capacity is N/A

Maximum Hourly Throughput:	**Maximum Annual Throughput:**	**Maximum Operating Schedule:**
N/A	N/A	4848 hours

Fuel Usage Data **(fill out all applicable fields)**

Does this emission unit combust fuel? ___Yes _x_ No	**If yes, is it?** ___ Indirect Fired ___Direct Fired
Maximum design heat input and/or maximum horsepower rating: N/A	**Type and Btu/hr rating of burners:** N/A

List the primary fuel type(s) and if applicable, the secondary fuel type(s). For each fuel type listed, provide the maximum hourly and annual fuel usage for each.
N/A

Describe each fuel expected to be used during the term of the permit.

Fuel Type	Max. Sulfur Content	Max. Ash Content	BTU Value
N/A	N/A	N/A	N/A

Emissions Data

Criteria Pollutants	Potential Emissions	
	PPH	TPY
Carbon Monoxide (CO)	N/A	N/A
Nitrogen Oxides (NO_X)	N/A	N/A
Lead (Pb)	N/A	N/A
Particulate Matter ($PM_{2.5}$)	N/A	N/A
Particulate Matter (PM_{10})	N/A	N/A
Total Particulate Matter (TSP)	15.41	67.5
Sulfur Dioxide (SO_2)	N/A	N/A
Volatile Organic Compounds (VOC)	N/A	N/A
Hazardous Air Pollutants	Potential Emissions	
	PPH	TPY
N/A	N/A	N/A
Regulated Pollutants other than Criteria and HAP	Potential Emissions	
	PPH	TPY
N/A	N/A	N/A

List the method(s) used to calculate the potential emissions (include dates of any stack tests conducted, versions of software used, source and dates of emission factors, etc.).

See Emission Calculations in Attachment I

Applicable Requirements

List all applicable requirements for this emission unit. For each applicable requirement, include the underlying rule/regulation citation and/or construction permit with the condition number. (*Note: Title V permit condition numbers alone are not the underlying applicable requirements*). If an emission limit is calculated based on the type of source and design capacity or if a standard is based on a design parameter, this information should also be included.

Fugitive emission controls applicable to paved roads. All paved roadways or haulways on the premises or serving the permitted facility shall be vacuum swept, at a minimum, once per day that feedstock shall be delivered to the facility or ash removed from the facility, except during times of inclement weather. Berms along these roads or haulways shall be treated with Coherex or Soil-Sement (or a Division of Air Qualityapproved equivalent) once per calendar quarter.
[45CSR13 - Permit No. R13-2075C §(A)(8)]
(Title V permit condition 3.1.12)

Fugitive emission controls applicable to all haulroads and other work areas where mobile equipment is used. The permittee shall maintain a water truck on site and in good operating condition, and shall utilize same to apply water as often as is necessary in order to minimize the atmospheric entrainment of fugitive particulate emissions that may be generated from all haulroads and other work areas where mobile equipment is used. The spraybar shall be equipped with commercially available spray nozzles, of sufficient size and number, so as to provide adequate coverage to the area being treated.
The pump delivering the water, or solution, shall be of sufficient size and capacity so as to be capable of delivering to the spray nozzle(s) an adequate quantity of water, or solution, and at a sufficient pressure, so as to assure that the treatment process will minimize the atmospheric entrainment of fugitive particulate emissions generated from the haulroads and work areas where mobile equipment is used.
[45CSR13 - Permit No. R13-2075C §(A)(10)]
(Title V permit condition 3.1.14)

____ Permit Shield

For all applicable requirements listed above, provide monitoring/testing/recordkeeping/reporting which shall be used to demonstrate compliance. If the method is based on a permit or rule, include the condition number or citation. (Note: Each requirement listed above must have an associated method of demonstrating compliance. If there is not already a required method in place, then a method must be proposed.)

The permittee shall maintain records indicating the use of any dust suppressants or any other suitable dust control measures applied at the facility. The permittee shall also inspect all fugitive dust control systems weekly from May 1 through September 30 and monthly from October 1 through April 30 to ensure that they are operated and maintained in conformance with their designs. The permittee shall maintain records of all scheduled and non-scheduled maintenance and shall state any maintenance or corrective actions taken as a result of the weekly and/or monthly inspections, the times the fugitive dust control system(s) were inoperable and any corrective actions taken.
[45CSR§30-5.1.c.] (Title V permit condition 3.4.4)

For the purposes of determining compliance with conditions 3.1.12., 3.1.13. and 3.1.14, certified daily and monthly records of haulroad treatments shall be maintained. Such records shall be retained by the permittee for at least five (5) years. Certified records shall be made available to the Director or his/her duly authorized representative upon request.
[45CSR13 - Permit No. R13-2075C §(B)(5)] (Title V permit condition 3.4.5)

ATTACHMENT G
AIR POLLUTION CONTROL DEVICE FORMS

ATTACHMENT G - Air Pollution Control Device Form

Control device ID number: Baghouse 4C	**List all emission units associated with this control device.** Fuel Screening Building (4-S)	
Manufacturer: W.W. SLY Inc.	**Model number:** Pactecon PC-210-6	**Installation date:** 1989

Type of Air Pollution Control Device:

_X_ Baghouse/Fabric Filter
___ Venturi Scrubber
___ Multiclone
___ Carbon Bed Adsorber
___ Packed Tower Scrubber
___ Single Cyclone
___ Carbon Drum(s)
___ Other Wet Scrubber
___ Cyclone Bank
___ Catalytic Incinerator
___ Condenser
___ Settling Chamber
___ Thermal Incinerator
___ Flare
___ Other (describe) _____
___ Wet Plate Electrostatic Precipitator
___ Dry Plate Electrostatic Precipitator

List the pollutants for which this device is intended to control and the capture and control efficiencies.

Pollutant	Capture Efficiency	Control Efficiency
Particulate Matter	100 %	> 99 %

Explain the characteristic design parameters of this control device (flow rates, pressure drops, number of bags, size, temperatures, etc.).
Baghouse 4C is designed to capture particulate matter from the fuel screening building (emission unit id 4-S). There are twenty modules in the baghouse, and each module contains six bags. Each bag contains 22 sq. ft. of cloth made out of 16 ounce polyester material, and has an air to cloth ratio of 6:1. The baghouse operates at ambient temperature and is designed for flow rate of 16,450 CFM. The baghouse cleaning cycle is based on differential pressure across the entire baghouse. When the differential pressure set point is reached, a single module isolates and pulse cleans. This sequence continues through the rest of the modules.

Is this device subject to the CAM requirements of 40 C.F.R. 64? __ Yes _X_ No

If Yes, **Complete ATTACHMENT H**

If No, **Provide justification.**

Describe the parameters monitored and/or methods used to indicate performance of this control device.

Visible emission checks are performed weekly during periods of normal facility operation.

ATTACHMENT G - Air Pollution Control Device Form

Control device ID number: Baghouse 5C	**List all emission units associated with this control device.** Crusher Building (5-S), Fuel Hammermill 2A (CR-MH-2A), Fuel Hammermill 2B (CR-MH-2B), Fuel Hammermill 2C (CR-MH-2C), Main fuel Conveyors to Conveyors 1H, 1J, and 1K (via 1H) (CV-ME-1G), & Limestone Impactor 1 (CR-LH-1A)	
Manufacturer: W.W. SLY Inc.	**Model number:** Pactecon PC-215-6	**Installation date:** 1989

Type of Air Pollution Control Device:

_X_ Baghouse/Fabric Filter
___ Venturi Scrubber
___ Multiclone
___ Carbon Bed Adsorber
___ Packed Tower Scrubber
___ Single Cyclone
___ Carbon Drum(s)
___ Other Wet Scrubber
___ Cyclone Bank
___ Catalytic Incinerator
___ Condenser
___ Settling Chamber
___ Thermal Incinerator
___ Flare
___ Other (describe) _____
___ Wet Plate Electrostatic Precipitator
___ Dry Plate Electrostatic Precipitator

List the pollutants for which this device is intended to control and the capture and control efficiencies.

Pollutant	Capture Efficiency	Control Efficiency
Particulate Matter	100 %	> 99 %

Explain the characteristic design parameters of this control device (flow rates, pressure drops, number of bags, size, temperatures, etc.).
Baghouse 5C is designed to capture particulate matter from the Crusher Building (5-S), Fuel Hammermill 2A (CR-MH-2A), Fuel Hammermill 2B (CR-MH-2B), Fuel Hammermill 2C (CR-MH-2C), Main fuel Conveyors to Conveyors 1H, 1J, and 1K (via 1H) (CV-ME-1G), & Limestone Impactor 1 (CR-LH-1A). There are thirty modules in the baghouse, and each module contains six bags. Each bag contains 22 sq. ft. of cloth made out of 16 ounce polyester material, and provides an air to cloth ratio of 6:1. The baghouse operates at ambient temperature and is designed for flow rate of 23,000 CFM. The baghouse cleaning cycle is based on differential pressure across the entire baghouse. When the differential pressure set point is reached, a single module isolates and pulse cleans. This sequence continues through the rest of the modules.

Is this device subject to the CAM requirements of 40 C.F.R. 64? __ Yes _X_ No

If Yes, **Complete ATTACHMENT H**

If No, **Provide justification.**

Describe the parameters monitored and/or methods used to indicate performance of this control device.

Visible emission checks are performed weekly during periods of normal facility operation.

ATTACHMENT G - Air Pollution Control Device Form

Control device ID number: Baghouse 6C	**List all emission units associated with this control device.** Ash Storage Silo (BN-AH-3)	
Manufacturer: United Conveyor Corp.	**Model number:** MikroPul Environmental systems 144s10-20TRH "B"	**Installation date:** 1989

Type of Air Pollution Control Device:

_X_ Baghouse/Fabric Filter	___ Venturi Scrubber	___ Multiclone
___ Carbon Bed Adsorber	___ Packed Tower Scrubber	___ Single Cyclone
___ Carbon Drum(s)	___ Other Wet Scrubber	___ Cyclone Bank
___ Catalytic Incinerator	___ Condenser	___ Settling Chamber
___ Thermal Incinerator	___ Flare	___ Other (describe) _____
___ Wet Plate Electrostatic Precipitator		___ Dry Plate Electrostatic Precipitator

List the pollutants for which this device is intended to control and the capture and control efficiencies.

Pollutant	Capture Efficiency	Control Efficiency
Particulate Matter	100 %	> 99 %

Explain the characteristic design parameters of this control device (flow rates, pressure drops, number of bags, size, temperatures, etc.).
Baghouse 6C is designed to capture particulate matter from the Ash Storage Silo (BN-AH-3). There are 144 filter bags made out of Nomex HCE. The bags are made out of 1696 square feet of cloth material. The baghouse operates at a maximum temperature of 450 F. The baghouse cleaning cycle is based on differential pressure across the entire baghouse.

Is this device subject to the CAM requirements of 40 C.F.R. 64? __ Yes _X_ No

If Yes, **Complete ATTACHMENT H**

If No, **Provide justification.**

Describe the parameters monitored and/or methods used to indicate performance of this control device.

Visible emission checks are performed weekly during periods of normal facility operation.

ATTACHMENT G - Air Pollution Control Device Form

Control device ID number: Baghouse 7C	**List all emission units associated with this control device.** Northeast / Northwest Fuel Bunkers (BN-MH-1A1, 1A2)	
Manufacturer: W.W. SLY Inc.	**Model number:** Paceton PC-204-6	**Installation date:** 1989

Type of Air Pollution Control Device:

_X_ Baghouse/Fabric Filter	___ Venturi Scrubber	___ Multiclone
___ Carbon Bed Adsorber	___ Packed Tower Scrubber	___ Single Cyclone
___ Carbon Drum(s)	___ Other Wet Scrubber	___ Cyclone Bank
___ Catalytic Incinerator	___ Condenser	___ Settling Chamber
___ Thermal Incinerator	___ Flare	___ Other (describe) _____
___ Wet Plate Electrostatic Precipitator		___ Dry Plate Electrostatic Precipitator

List the pollutants for which this device is intended to control and the capture and control efficiencies.

Pollutant	Capture Efficiency	Control Efficiency
Particulate Matter	100 %	> 99 %

Explain the characteristic design parameters of this control device (flow rates, pressure drops, number of bags, size, temperatures, etc.).
Baghouse 7C is designed to capture particulate matter from Northeast / Northwest Fuel Bunkers (BN-MH-1A1, 1A2, 1B1 &1B2 Fuel Bunkers. There are eight modules in the baghouse, and each module contains six bags. The bags are made out of 22 square feet of cloth made out of 16 ounce polyester material, and provide a total air to cloth ratio of 6:1. The baghouse operates at ambient temperature and is designed for flow rate of 6000 CFM. The baghouse cleaning cycle is based on differential pressure across the entire baghouse. When the differential pressure set point is reached, a single module isolates and pulse cleans. This sequence continues through the rest of the modules.

Is this device subject to the CAM requirements of 40 C.F.R. 64? __ Yes _X_ No

If Yes, **Complete ATTACHMENT H**

If No, **Provide justification.**

Describe the parameters monitored and/or methods used to indicate performance of this control device.

Visible emission checks are performed weekly during periods of normal facility operation.

ATTACHMENT G - Air Pollution Control Device Form

Control device ID number: Baghouse 8C	**List all emission units associated with this control device.** Fuel Storage silos and transfer to conveyor 1F (Silo 6A & 6B)	
Manufacturer: W.W. SLY Inc.	**Model number:** Pactecon PC-204-6	**Installation date:** 1989

Type of Air Pollution Control Device:

_X_ Baghouse/Fabric Filter	___ Venturi Scrubber	___ Multiclone
___ Carbon Bed Adsorber	___ Packed Tower Scrubber	___ Single Cyclone
___ Carbon Drum(s)	___ Other Wet Scrubber	___ Cyclone Bank
___ Catalytic Incinerator	___ Condenser	___ Settling Chamber
___ Thermal Incinerator	___ Flare	___ Other (describe) _____
___ Wet Plate Electrostatic Precipitator		___ Dry Plate Electrostatic Precipitator

List the pollutants for which this device is intended to control and the capture and control efficiencies.

Pollutant	Capture Efficiency	Control Efficiency
Particulate Matter	100 %	> 99 %

Explain the characteristic design parameters of this control device (flow rates, pressure drops, number of bags, size, temperatures, etc.).
Baghouse A is designed to capture particulate matter from the Fuel Storage silos and transfer to conveyor 1F (Silo 6A & 6B). There are eight modules in the baghouse, and each module contains six bags. Each bag contains 22 square feet of cloth made out of 16 ounce polyester material, and provide a total air to cloth ratio of 6:1. The baghouse operates at ambient temperature and is designed for flow rate of 6000 CFM. The baghouse cleaning cycle is based on differential pressure across the entire baghouse. When the differential pressure set point is reached, a single module isolates and pulse cleans. This sequence continues through the rest of the modules.

Is this device subject to the CAM requirements of 40 C.F.R. 64? __ Yes _X_ No

If Yes, **Complete ATTACHMENT H**

If No, **Provide justification.**

Describe the parameters monitored and/or methods used to indicate performance of this control device.

Visible emission checks are performed weekly during periods of normal facility operation.

ATTACHMENT G - Air Pollution Control Device Form

Control device ID number:	**List all emission units associated with this control device.**
Baghouse 9C	Crushed Limestone Storage Silo (BN-LH-3)

Manufacturer:	**Model number:**	**Installation date:**
United Conveyor Corp.	MikroPul Environmental systems 100S8-20TRH "B"	1989

Type of Air Pollution Control Device:

_X_ Baghouse/Fabric Filter	___ Venturi Scrubber	___ Multiclone
___ Carbon Bed Adsorber	___ Packed Tower Scrubber	___ Single Cyclone
___ Carbon Drum(s)	___ Other Wet Scrubber	___ Cyclone Bank
___ Catalytic Incinerator	___ Condenser	___ Settling Chamber
___ Thermal Incinerator	___ Flare	___ Other (describe) _____
___ Wet Plate Electrostatic Precipitator		___ Dry Plate Electrostatic Precipitator

List the pollutants for which this device is intended to control and the capture and control efficiencies.

Pollutant	Capture Efficiency	Control Efficiency
Particulate Matter	100 %	> 99 %

Explain the characteristic design parameters of this control device (flow rates, pressure drops, number of bags, size, temperatures, etc.).
Baghouse 9C is designed to capture particulate matter from the Crushed Limestone Storage Silo (BN-LH-3). There are 100 bags that are made out of 942 square feet of cloth material. The filter bags are made out of polyester. The baghouse operates at a maximum temperature of 200 F. The baghouse cleaning cycle is based on differential pressure across the entire baghouse.

Is this device subject to the CAM requirements of 40 C.F.R. 64? __ Yes _X_ No

If Yes, **Complete ATTACHMENT H**

If No, **Provide justification.**

Describe the parameters monitored and/or methods used to indicate performance of this control device.

Visible emission checks are performed weekly during periods of normal facility operation.

ATTACHMENT G - Air Pollution Control Device Form

Control device ID number:	**List all emission units associated with this control device.**
Baghouse 13C	Southeast / Southwest Fuel Bunkers (BN-MH-1B1, BN-MH-1B2)

Manufacturer:	**Model number:**	**Installation date:**
W.W. SLY Inc.	Pactecon PC-204-6	1989

Type of Air Pollution Control Device:

_X_ Baghouse/Fabric Filter	___ Venturi Scrubber	___ Multiclone
___ Carbon Bed Adsorber	___ Packed Tower Scrubber	___ Single Cyclone
___ Carbon Drum(s)	___ Other Wet Scrubber	___ Cyclone Bank
___ Catalytic Incinerator	___ Condenser	___ Settling Chamber
___ Thermal Incinerator	___ Flare	___ Other (describe) _____
___ Wet Plate Electrostatic Precipitator		___ Dry Plate Electrostatic Precipitator

List the pollutants for which this device is intended to control and the capture and control efficiencies.

Pollutant	Capture Efficiency	Control Efficiency
Particulate Matter	100 %	> 99 %

Explain the characteristic design parameters of this control device (flow rates, pressure drops, number of bags, size, temperatures, etc.).

Baghouse 13C is designed to capture particulate matter from the Southeast / Southwest Fuel Bunkers (BN-MH-1B1, BN-MH-1B2). There are eight modules in the baghouse, and each module contains six bags. Each bag contains 22 square feet of cloth made out of 16 ounce polyester material, and provides a total cloth to air ratio of 6:1. The baghouse operates at ambient temperature and is designed for flow rate of 6000 CFM. The baghouse cleaning cycle is based on differential pressure across the entire baghouse. When the differential pressure set point is reached, a single module isolates and pulse cleans. This sequence continues through the rest of the modules.

Is this device subject to the CAM requirements of 40 C.F.R. 64? __ Yes _X_ No

If Yes, **Complete ATTACHMENT H**

If No, **Provide justification.**

Describe the parameters monitored and/or methods used to indicate performance of this control device.

Visible emission checks are performed weekly during periods of normal facility operation.

ATTACHMENT G - Air Pollution Control Device Form

Control device ID number: Baghouse A	**List all emission units associated with this control device.** Boiler 1A	
Manufacturer: Environmental Elements Corp.	**Model number:** ENELCO Pulse-jet Filter Model 12XD298-14TD	**Installation date:** 1990

Type of Air Pollution Control Device:

_X_ Baghouse/Fabric Filter	___ Venturi Scrubber	___ Multiclone
___ Carbon Bed Adsorber	___ Packed Tower Scrubber	___ Single Cyclone
___ Carbon Drum(s)	___ Other Wet Scrubber	___ Cyclone Bank
___ Catalytic Incinerator	___ Condenser	___ Settling Chamber
___ Thermal Incinerator	___ Flare	___ Other (describe) _____
___ Wet Plate Electrostatic Precipitator		___ Dry Plate Electrostatic Precipitator

List the pollutants for which this device is intended to control and the capture and control efficiencies.

Pollutant	Capture Efficiency	Control Efficiency
Particulate Matter	100 %	> 99 %

Explain the characteristic design parameters of this control device (flow rates, pressure drops, number of bags, size, temperatures, etc.).
Baghouse A is designed to capture particulate matter from Boiler 1A. There are 12 compartments and each compartment contains 294 Midwesco TetraTex 651 membrane filter bags per compartment. There are 3528 bags total that have a diameter and lengh of 6" x 14' and a total cloth area of 77616 square feet. The air to cloth ratio in (gross/net/net-net) is 3/3.28/3.60 with an inlet gas temperature of 340 F. The baghouse cleaning cycle is based on differential pressure across the entire baghouse. When the differential pressure set point is reached, a single compartment isolates and pulse cleans. This sequence continues through the rest of the compartments automatically until all 12 compartments have been cleaned. Total bag replacement took place in the Fall of 2007.

Is this device subject to the CAM requirements of 40 C.F.R. 64? _X_ Yes ___ No

If Yes, **Complete ATTACHMENT H**

If No, **Provide justification.**

Describe the parameters monitored and/or methods used to indicate performance of this control device.

Visible emission checks are performed weekly during periods of normal facility operation.

ATTACHMENT G - Air Pollution Control Device Form

Control device ID number: Baghouse B	**List all emission units associated with this control device.** Boiler 1B	
Manufacturer: Environmental Elements Corp.	**Model number:** ENELCO Pulse-jet Filter Model 12XD298-14TD	**Installation date:** 1990

Type of Air Pollution Control Device:

_X_ Baghouse/Fabric Filter	___ Venturi Scrubber	___ Multiclone
___ Carbon Bed Adsorber	___ Packed Tower Scrubber	___ Single Cyclone
___ Carbon Drum(s)	___ Other Wet Scrubber	___ Cyclone Bank
___ Catalytic Incinerator	___ Condenser	___ Settling Chamber
___ Thermal Incinerator	___ Flare	___ Other (describe) _____
___ Wet Plate Electrostatic Precipitator		___ Dry Plate Electrostatic Precipitator

List the pollutants for which this device is intended to control and the capture and control efficiencies.

Pollutant	Capture Efficiency	Control Efficiency
Particulate Matter	100 %	> 99 %

Explain the characteristic design parameters of this control device (flow rates, pressure drops, number of bags, size, temperatures, etc.).
Baghouse B is designed to capture particulate matter from Boiler 1A. There are 12 compartments and each compartment contains 294 Midwesco TetraTex 651 membrane filter bags per compartment. There are 3528 bags total that have a diameter and lengh of 6" x 14' and a total cloth area of 77616 square feet. The air to cloth ratio in (gross/net/net-net) is 3/3.28/3.60 with an inlet gas temperature of 340 F. The baghouse cleaning cycle is based on differential pressure across the entire baghouse. When the differential pressure set point is reached, a single compartment isolates and pulse cleans. This sequence continues through the rest of the compartments automatically until all 12 compartments have been cleaned. Total bag replacement took place in the Fall of 2007.

Is this device subject to the CAM requirements of 40 C.F.R. 64? _X_ Yes ___ No

If Yes, **Complete ATTACHMENT H**

If No, **Provide justification.**

Describe the parameters monitored and/or methods used to indicate performance of this control device.

Visible emission checks are performed weekly during periods of normal facility operation.

ATTACHMENT H
COMPLIANCE ASSURANCE MONITORING PLAN FORMS

ATTACHMENT H – CAM PLAN

CFB BOILER 1A

ATTACHMENT H - Compliance Assurance Monitoring (CAM) Plan Form

For definitions and information about the CAM rule, please refer to 40 CFR Part 64. Additional information (including guidance documents) may also be found at http://www.epa.gov/ttn/emc/cam.html

CAM APPLICABILITY DETERMINATION

1) Does the facility have a PSEU (Pollutant-Specific Emissions Unit considered separately with respect to **EACH** regulated air pollutant) that is subject to CAM (40 CFR Part 64), which must be addressed in this CAM plan submittal? To determine applicability, a PSEU must meet **all** of the following criteria (*If No, then the remainder of this form need not be completed*): ☒ YES ☐ NO

a. The PSEU is located at a major source that is required to obtain a Title V permit;

b. The PSEU is subject to an emission limitation or standard for the applicable regulated air pollutant that is NOT exempt;

LIST OF EXEMPT EMISSION LIMITATIONS OR STANDARDS:

- NSPS (40 CFR Part 60) or NESHAP (40 CFR Parts 61 and 63) proposed after 11/15/1990.
- Stratospheric Ozone Protection Requirements.
- Acid Rain Program Requirements.
- Emission Limitations or Standards for which a WVDEP Division of Air Quality Title V permit specifies a continuous compliance determination method, as defined in 40 CFR §64.1.
- An emission cap that meets the requirements specified in 40 CFR §70.4(b)(12).

c. The PSEU uses an add-on control device (as defined in 40 CFR §64.1) to achieve compliance with an emission limitation or standard;

d. The PSEU has potential pre-control device emissions of the applicable regulated air pollutant that are equal to or greater than the Title V Major Source Threshold Levels; AND

e. The PSEU is NOT an exempt backup utility power emissions unit that is municipally-owned.

BASIS OF CAM SUBMITTAL

2) Mark the appropriate box below as to why this CAM plan is being submitted as part of an application for a Title V permit:

☒ RENEWAL APPLICATION. **ALL** PSEUs for which a CAM plan has NOT yet been approved need to be addressed in this CAM plan submittal.

☐ INITIAL APPLICATION (submitted after 4/20/98). **ONLY** large PSEUs (i. e., PSEUs with potential post-control device emissions of an applicable regulated air pollutant that are equal to or greater than Major Source Threshold Levels) need to be addressed in this CAM plan submittal.

☐ SIGNIFICANT MODIFICATION TO LARGE PSEUs. **ONLY** large PSEUs being modified after 4/20/98 need to be addressed in this cam plan submittal. For large PSEUs with an approved CAM plan, Only address the appropriate monitoring requirements affected by the significant modification.

3) [a] BACKGROUND DATA AND INFORMATION

Complete the following table for **all** PSEUs that need to be addressed in this CAM plan submittal. This section is to be used to provide background data and information for each PSEU In order to supplement the submittal requirements specified in 40 CFR §64.4. If additional space is needed, attach and label accordingly.

PSEU DESIGNATION	DESCRIPTION	POLLUTANT	CONTROL DEVICE	[b] EMISSION LIMITATION or STANDARD	[c] MONITORING REQUIREMENT
Boiler 1A	Boiler 1A- Ahlstrom Model Pyroflow CFB; S/N W - 19206 -W	PM	Baghouse	45CSR13/14-Permit no. R13-1020B/R14-04B Specific requirement (A)(1); 45CSR§2-3.1; 0.03 lbm/mmBtu	Stack testing per the schedule set forth in Title V permit condition 4.3.10
Boiler 1B	Boiler 1B- Ahlstrom Model Pyroflow CFB; S/N W - 19207 -W	PM	Baghouse	45CSR13/14-Permit no. R13-1020B/R14-04B Specific requirement (A)(1); 45CSR§2-3.1; 0.03 lbm/mmBtu	Stack testing per the schedule set forth in Title V permit condition 4.3.10
EXAMPLE Boiler No. 1	Wood-Fired Boiler	PM	Multiclone	45CSR§2-4.1.c.; 9.0 lb/hr	Monitor pressure drop across multiclone: Weekly inspection of multiclone

[a] If a control device is common to more than one PSEU, one monitoring plan may be submitted for the control device with the affected PSEUs identified and any conditions that must be maintained or monitored in accordance with 40 CFR §64.3(a). If a single PSEU is controlled by more than one control device similar in design and operation, one monitoring plan for the applicable control devices may be submitted with the applicable control devices identified and any conditions that must be maintained or monitored in accordance with 40 CFR §64.3(a).

[b] Indicate the emission limitation or standard for any applicable requirement that constitutes an emission limitation, emission standard, or standard of performance (as defined in 40 CFR §64.1).

[c] Indicate the monitoring requirements for the PSEU that are required by an applicable regulation or permit condition.

CAM MONITORING APPROACH CRITERIA

Complete this section for **EACH** PSEU that needs to be addressed in this CAM plan submittal. This section may be copied as needed for each PSEU. This section is to be used to provide monitoring data and information for EACH indicator selected for EACH PSEU in order to meet the monitoring design criteria specified in 40 CFR §64.3 and §64.4. if more than two indicators are being selected for a PSEU or if additional space is needed, attach and label accordingly with the appropriate PSEU designation, pollutant, and indicator numbers.

4a) PSEU Designation: 1A	**4b) Pollutant:** PM	**4c) [a] Indicator No. 1:** Opacity	**4d) [a] Indicator No. 2:** **Baghouse Cleaning Frequency**
5a) GENERAL CRITERIA Describe the MONITORING APPROACH used to measure the indicators:		Opacity is measured and recorded by a certified opacity monitoring system. There is a single stack and a single opacity monitor that service both units at North Branch.	Baghouse Cleaning Frequency is measured as "minutes between baghouse cleaning cycles including the actual fixed cleaning time" or "minutes between the beginning of the baghouse cleaning cycle to the beginning of the next baghouse cleaning cycle" These cleaning cycles take place automatically. Supplementary actions are taken in the event that baghouse cleaning cycles increase.
[b] Establish the appropriate INDICATOR RANGE or the procedures for establishing the indicator range which provides a reasonable assurance of compliance:		Opacity is continuously monitored. These continuous values are reduced to six-minute block averages. An excursion of opacity is defined as any six-minute period during any one-hour period that exceeds 10% opacity.	The range of cleaning cycles may vary from 30 minutes or less to 90 minutes and greater. Diffierential Pressure and Opacity triggers the frequency of these cleaning cycles. • Action Level I – Baghouse Cleaning Frequency ≥ 45 and < 50 minutes (7 day rolling average) • Action Level II – Baghouse Cleaning Frequency ≥ 40 and < 45 (7 day rolling average) Action Level III - Baghouse Cleaning Frequency < 40 minutes (7 day rolling average)
5b) PERFORMANCE CRITERIA Provide the SPECIFICATIONS FOR OBTAINING REPRESENTATIVE DATA, such as detector location, installation specifications, and minimum acceptable accuracy:		These units are subject to the federal New Source Performance Standard (NSPS) for electric utility steam generating units. As such, opacity monitoring is required and the location of the monitors is specified in 40 CFR 60, Appendix B, Performance Specification 1 (PS-1). The COMS was installed in accordance with PS-1.	NA, COMS satisfy 40 CFR 64.3(b).
[c] For new or modified monitoring equipment, provide VERIFICATION PROCEDURES, including manufacturer's recommendations, TO CONFIRM THE OPERATIONAL STATUS of the monitoring:		This provision of the CAM program applies to facilities that are proposing monitoring methods that are not otherwise required. Since the operation of the COMS is otherwise required, this provision is not applicable.	NA

Provide QUALITY ASSURANCE AND QUALITY CONTROL (QA/QC) PRACTICES that are adequate to ensure the continuing validity of the data, (i.e., daily calibrations, visual inspections, routine maintenance, RATA, etc.):	The CAM program requires "quality assurance and control practices that are adequate to ensure the continuing validity of the data." This COMS was installed and evaluated in accordance with PS-1. Zero and span drift are checked daily and filter audits are performed in accordance with PS-1.	NA
[d] Provide the MONITORING FREQUENCY:	The monitoring frequency is continuous.	daily
Provide the DATA COLLECTION PROCEDURES that will be used:	The data are collected by a computerized data acquisition and handling system (DAHS). This system collects and retains all relevant opacity data.	Events and corrective actions are logged as needed.
Provide the DATA AVERAGING PERIOD for the purpose of determining whether an excursion or exceedance has occurred:	The averaging period is on a six-minute block basis.	NA

[a] Describe all indicators to be monitored which satisfies 40 CFR §64.3(a). Indicators of emission control performance for the control device and associated capture system may include measured or predicted emissions (including visible emissions or opacity), process and control device operating parameters that affect control device (and capture system) efficiency or emission rates, or recorded findings of inspection and maintenance activities.

[b] Indicator Ranges may be based on a single maximum or minimum value or at multiple levels that are relevant to distinctly different operating conditions, expressed as a function of process variables, expressed as maintaining the applicable indicator in a particular operational status or designated condition, or established as interdependent between more than one indicator. For CEMS, COMS, or PEMS, include the most recent certification test for the monitor.

[c] The verification for operational status should include procedures for installation, calibration, and operation of the monitoring equipment, conducted in accordance with the manufacturer's recommendations, necessary to confirm the monitoring equipment is operational prior to the commencement of the required monitoring.

[d] Emission units with post-control PTE ≥ 100 percent of the amount classifying the source as a major source (i.e., Large PSEU) must collect four or more values per hour to be averaged. A reduced data collection frequency may be approved in limited circumstances. Other emission units must collect data at least once per 24 hour period.

RATIONALE AND JUSTIFICATION

Complete this section for EACH PSEU that needs to be addressed in this CAM plan submittal. This section may be copied as needed for each PSEU. This section is to be used to provide rationale and justification for the selection of EACH indicator and monitoring approach and EACH indicator range in order to meet the submittal requirements specified in 40 CFR §64.4.

6a) PSEU Designation:	6b) Regulated Air Pollutant:
Unit 1A	PM

7) **INDICATORS AND THE MONITORING APPROACH**: Provide the rationale and justification for the selection of the indicators and the monitoring approach used to measure the indicators. Also provide any data supporting the rationale and justification. Explain the reasons for any differences between the verification of operational status or the quality assurance and control practices proposed, and the manufacturer's recommendations. (If additional space is needed, attach and label accordingly with the appropriate PSEU designation and pollutant):

Indicator 1:

Because the units at North Branch use baghouses to comply with PM limits (opacity limits), failures of the baghouses to control PM emissions will be immediately obvious in terms of opacity. The existing permits for North Branch contain requirements for opacity that are significantly more stringent than the applicable New Source Performance Standard (NSPS) for this facility category. Therefore Dominion proposes that the permitted opacity limit of 10% with no more than one six-minute block average an appropriate indicator that the units are operating in compliance with their associated PM limits.

There are special criteria in the CAM program for the use of continuous monitoring systems, including COMs.

First if the use of a COMS is required pursuant to other authority under the Act, then the use of a COMS is required to satisfy CAM. In this case, the use of a COMS is required by the applicable NSPS and is therefore required as an element of the CAM program.

Second, the use of COMs that are installed in accordance with NSPS requirements is automatically "deemed to satisfy the general design criteria" of the CAM program. (§64.3(d)(2)(ii)) This provision of the regulations also notes that a COMS may be subject to additional requirements to ensure that the selected indicator ranges are relevant. This additional testing is not believed to be necessary for this facility. Because the 10% opacity limit for this facility is so stringent, it would serve no useful purpose to demonstrate that compliance with the PM limits can still be achieved at some level other than 10% opacity. Therefore, we believe that the 10% opacity limit reflects the correct and appropriate indicator range without additional testing.

Third, the monitoring system must allow for the reporting of excursions consistent with any period for reporting of exceedances in an underlying requirement. (§64.3(d)(3)(i)) Historically, there has been no "periodic" reporting of exceedances of PM emissions: these were based solely on stack tests, and failures were (and continue to be) immediately reportable in accordance with regulatory requirements. However, there are procedures for reporting excess opacity, and these procedures should remain acceptable for CAM purposes.

Indicator 2:

In addition to monitoring opacity continuously on Units 1A and 1B, North Branch's current Parametric Monitoring Plan, (which is an attachment to the Title V permit) already has requirements and procedures that the station must follow to ensure that the baghouse is operating efficiently. The "baghouse cleaning frequency" serves as an appropriate indicator that the units are operating in compliance with their associated PM limits. Baghouse Cleaning Frequency is measured as "minutes between baghouse cleaning cycles including the actual fixed cleaning time" or "minutes between the beginning of the baghouse cleaning cycle to the beginning of the next baghouse cleaning cycle". These cleanings take place automatically. Supplementary actions are taken in the event that the baghouse cleaning cycles increase. These actions are supplemental to the primary indicator of opacity and are taken to determine which of the two units may be causing an increase in opacity.

Continuous opacity monitoring and appropriate responses to the baghouses that are initiated by the clean cycle frequencies together will provide a reasonable assurance of ongoing compliance with the PM limits for this facility and meet the intent of the CAM program.

8) **INDICATOR RANGES**: Provide the rationale and justification for the selection of the indicator ranges. The rationale and justification shall indicate how EACH indicator range was selected by either a COMPLIANCE OR PERFORMANCE TEST, a TEST PLAN AND SCHEDULE, or by ENGINEERING ASSESSMENTS. Depending on which method is being used for each indicator range, include the specific information required below for that specific indicator range. (If additional space is needed, attach and label accordingly with the appropriate PSEU designation and pollutant):

- COMPLIANCE OR PERFORMANCE TEST (Indicator ranges determined from control device operating parameter data obtained during a compliance or performance test conducted under regulatory specified conditions or under conditions representative of maximum potential emissions under anticipated operating conditions. Such data may be supplemented by engineering assessments and manufacturer's recommendations). The rationale and justification shall INCLUDE a summary of the compliance or performance test results that were used to determine the indicator range, and documentation indicating that no changes have taken place that could result in a significant change in the control system performance or the selected indicator ranges since the compliance or performance test was conducted.

- TEST PLAN AND SCHEDULE (Indicator ranges will be determined from a proposed implementation plan and schedule for installing, testing, and performing any other appropriate activities prior to use of the monitoring). The rationale and justification shall INCLUDE the proposed implementation plan and schedule that will provide for use of the monitoring as expeditiously as practicable after approval of this CAM plan, except that in no case shall the schedule for completing installation and beginning operation of the monitoring exceed 180 days after approval.

- ENGINEERING ASSESSMENTS (Indicator Ranges or the procedures for establishing indicator ranges are determined from engineering assessments and other data, such as manufacturers' design criteria and historical monitoring data, because factors specific to the type of monitoring, control device, or PSEU make compliance or performance testing unnecessary). The rationale and justification shall INCLUDE documentation demonstrating that compliance testing is not required to establish the indicator range.

RATIONALE AND JUSTIFICATION:

The CAM plan is required to provide reasonable assurance that the PM emissions are meeting the specified emission limit.

Stack testing for PM using EPA Reference Method 5 is conducted every three years under the Title V permit and annually under the Decree. Method 5 testing has demonstrated a reasonable margin of compliance with PM emission limits. In 2004 through 2009 both units were tested for PM. The results were as follows:

2004 stack test: Particulate Matter Sampling Results: 0.0026 lb/mmBtu
2005 stack test: Particulate Matter Sampling Results: 0.0191 lb/mmBtu
2006 stack test: Particulate Matter Sampling Results: 0.006 lb/mmBtu
2007 stack test: Particulate Matter Sampling Results: 0.0136 lb/mmBtu
2008 stack test: Particulate Matter Sampling Results: 0.0064 lb/mmBtu
2009 stack test: Particulate Matter Sampling Results: 0.005 lb/mmBtu

Dominion will continue to conduct PM testing in accordance with the renewed Title V permit and the requirements of the Consent Decree.

The PM results for both units were less than and did not exceed the most restrictive emission limit of 0.03 lb/mmBtu when either or both of the boilers are in operation. CAM is designed to provide data that "provide a reasonable assurance of compliance with emission limitations or standards for the anticipated range of operations" at an emissions unit. Because the tested emissions from this facility are within the respective emission limits, Dominion proposes that opacity measured by the continuous opacity monitoring system (COMS) will be adequate to meet the requirements of CAM along with the parametric monitoring described in subsequent sections. A sample CAM table has also been attached.

Indicator 1:
The most important criteria from §64.3(a) are contained in paragraph (2). This paragraph requires that operation of the facility within the selected ranges of the indicators provides a "reasonable assurance of ongoing compliance with emission limitations for the anticipated range of operating conditions." The proposed range of indicators is the opacity limit for this facility; i.e., continuous operation between 0% and 10% opacity per hour, with no six-minute period over 10% opacity. These units are controlled by baghouses, and malfunctions that lead to excess particulate emissions should be immediately obvious from an opacity standpoint. Therefore, operation of the facility in compliance with its opacity standard will represent a reasonable assurance of ongoing compliance with emission limitations for the anticipated range of operating conditions. The CAM rule does not require that testing be conducted over the entire range of operating conditions, but emissions units should be tested at conditions that are representative of maximum emissions. (§64.4(c)(1)) Since past tests were conducted at the operating rates that represent maximum emissions (i.e., at least 90% of maximum capacity), this provision of the regulations is met.

This range is appropriate as a reasonable assurance of compliance with the PM mass emissions limits because past testing demonstrated a margin of compliance with the limits and the opacity is averaged on a much shorter period (six minutes vs. average of three one-hour test runs). In other words, even if there is a spike in opacity, it is not necessarily indicative of an exceedance of the particulate limits.

Indicator 2:

The range of baghouse cleaning cycles may vary from 30 minutes or less to 90 minutes and greater. Differential pressure and opacity triggers the frequency of these cleaning cycles, which triggers the station to take necessary actions to keep these baghouses in good operating conditions. Station personnel monitor the cleaning cycles of Baghouses A and B on a daily basis, if the cleaning cycle increases, then that is indicative of a problem with either (or both) baghouses. Once the problem is identified, corrective actions will be taken. The action levels are based on the frequencies of the cleaning cycles.

North Branch Power Station proposes that the continuous opacity monitoring and appropriate responses to the baghouses that are initiated by the clean cycle frequencies together constitute CAM for Units 1A and 1B.

There have been no changes that have taken place that could result in a significant change in the control system performance or the selected indicator ranges since the compliance tests were conducted. These baghouses are maintained on a continuous basis. The baghouses go through a continuous cleaning cycle, and bags are changed as needed. There is a preventive maintenance plan procedure that is performed on the baghouse on a monthly and annual basis

North Branch Power Station
Compliance Assurance Monitoring Plan

Emission Unit	**CFB Boilers 1A (Emission unit A) & 1B (Emission unit B)**
Description	Two Circulating Fluidized Bed boilers fueled with coal and waste coal.
Control Device	Baghouses
Regulated Pollutant	PM
Emission Limit	PM- 0.03 lbs/mmBtu and 35.8 lbs/hr (both boilers)
I. CAM Indicator #1	Opacity.
Measurement Approach	Continuous opacity monitor (COMS).
Monitoring Frequency	Continuous
Justification	COMS satisfies applicable monitoring requirements and performance specifications as specified in 40 CFR 64.3, "Special criteria for the use of continuous emission, opacity or predictive monitoring systems".
II. Indicator Range	Continuous operation between 0% - 10% opacity per hour on a six minute block basis. Excursion is one six-minute period > 10% opacity
III. Performance Criteria **Data Representativeness**	Location and installation of monitors is per 40 CFR 60, Appendix B, Performance Specification 1 (PS-1).
QA/QC Practices and Criteria	COMS was installed and evaluated in accordance with PS-1. Zero and span drift are checked daily and filter audits are performed in accordance with PS-1.
Data Collection Procedures	Data are collected by computerized data acquisition and handling system (DAHS). The system collects and retains all relevant opacity data.
Averaging period	Six-minute block basis.

Emission Unit	CFB Boilers 1A (Emission unit A) & 1B (Emission unit B)
Description	Two Circulating Fluidized Bed boilers fueled with coal and waste coal.
Control Device	Baghouses
Regulated Pollutant	PM
Emission Limit	PM- 0.03 lbs/mmBtu and 35.8 lbs/hr (both boilers)
I. CAM Indicator #2	Baghouse Cleaning Frequency
Measurement Approach	Baghouse Cleaning Frequency is measured as "minutes between baghouse cleaning cycles including the actual fixed cleaning time" or "minutes between the beginning of the baghouse cleaning cycle to the beginning of the next baghouse cleaning cycle" These cleaning cycles take place automatically. Supplementary actions are taken in the event that baghouse cleaning cycles increase : • Monitor cleaning cycle of Baghouses A and B on a daily basis, if cleaning cycle increases, then that is indicative of a problem with either (or both) baghouses • Once problem is identified corrective actions will be taken.
Monitoring Frequency	daily
Justification	These actions are supplemental to the primary indicator of opacity and are taken to determine which of the two units may be causing an increase in opacity.
II. Indicator Range	The range of cleaning cycles may vary from 30 minutes or less to 90 minutes and greater. Differential Pressure and Opacity triggers the frequency of these cleaning cycles. • Action Level I – Baghouse Cleaning Frequency ≥ 45 and < 50 minutes (7 day rolling average) • Action Level II – Baghouse Cleaning Frequency ≥ 40 and < 45 (7 day rolling average) • Action Level III - Baghouse Cleaning Frequency < 40 minutes (7 day rolling average)
III. Performance Criteria **Data Representativeness**	NA. COMS satisfy 40 CFR 64.3(b).
QA/QC Practices and Criteria	NA
Data Collection Procedures	Events and corrective actions are logged as needed.
Averaging period	NA

* North Branch is currently performing these operational procedures as part of their Parametric Monitoring Plan for Particulate Emissions

ATTACHMENT H – CAM PLAN

CFB BOILER 1B

ATTACHMENT H - Compliance Assurance Monitoring (CAM) Plan Form

For definitions and information about the CAM rule, please refer to 40 CFR Part 64. Additional information (including guidance documents) may also be found at http://www.epa.gov/ttn/emc/cam.html

CAM APPLICABILITY DETERMINATION

1) Does the facility have a PSEU (Pollutant-Specific Emissions Unit considered separately with respect to **EACH** regulated air pollutant) that is subject to CAM (40 CFR Part 64), which must be addressed in this CAM plan submittal? To determine applicability, a PSEU must meet **all** of the following criteria (*If No, then the remainder of this form need not be completed*): ☒ YES ☐ NO

a. The PSEU is located at a major source that is required to obtain a Title V permit;

b. The PSEU is subject to an emission limitation or standard for the applicable regulated air pollutant that is NOT exempt;

LIST OF EXEMPT EMISSION LIMITATIONS OR STANDARDS:

- NSPS (40 CFR Part 60) or NESHAP (40 CFR Parts 61 and 63) proposed after 11/15/1990.
- Stratospheric Ozone Protection Requirements.
- Acid Rain Program Requirements.
- Emission Limitations or Standards for which a WVDEP Division of Air Quality Title V permit specifies a continuous compliance determination method, as defined in 40 CFR §64.1.
- An emission cap that meets the requirements specified in 40 CFR §70.4(b)(12).

c. The PSEU uses an add-on control device (as defined in 40 CFR §64.1) to achieve compliance with an emission limitation or standard;

d. The PSEU has potential pre-control device emissions of the applicable regulated air pollutant that are equal to or greater than the Title V Major Source Threshold Levels; AND

e. The PSEU is NOT an exempt backup utility power emissions unit that is municipally-owned.

BASIS OF CAM SUBMITTAL

2) Mark the appropriate box below as to why this CAM plan is being submitted as part of an application for a Title V permit:

☒ RENEWAL APPLICATION. **ALL** PSEUs for which a CAM plan has NOT yet been approved need to be addressed in this CAM plan submittal.

☐ INITIAL APPLICATION (submitted after 4/20/98). **ONLY** large PSEUs (i. e., PSEUs with potential post-control device emissions of an applicable regulated air pollutant that are equal to or greater than Major Source Threshold Levels) need to be addressed in this CAM plan submittal.

☐ SIGNIFICANT MODIFICATION TO LARGE PSEUs. **ONLY** large PSEUs being modified after 4/20/98 need to be addressed in this cam plan submittal. For large PSEUs with an approved CAM plan, Only address the appropriate monitoring requirements affected by the significant modification.

3) [a] BACKGROUND DATA AND INFORMATION

Complete the following table for **all** PSEUs that need to be addressed in this CAM plan submittal. This section is to be used to provide background data and information for each PSEU In order to supplement the submittal requirements specified in 40 CFR §64.4. If additional space is needed, attach and label accordingly.

PSEU DESIGNATION	DESCRIPTION	POLLUTANT	CONTROL DEVICE	[b] EMISSION LIMITATION or STANDARD	[c] MONITORING REQUIREMENT
Boiler 1A	Boiler 1A- Ahlstrom Model Pyroflow CFB; S/N W - 19206 -W	PM	Baghouse	45CSR13/14-Permit no. R13-1020B/R14-04B Specific requirement (A)(1); 45CSR§2-3.1; 0.03 lbm/mmBtu	Stack testing per the schedule set forth in Title V permit condition 4.3.10
Boiler 1B	Boiler 1B- Ahlstrom Model Pyroflow CFB; S/N W - 19207 -W	PM	Baghouse	45CSR13/14-Permit no. R13-1020B/R14-04B Specific requirement (A)(1); 45CSR§2-3.1; 0.03 lbm/mmBtu	Stack testing per the schedule set forth in Title V permit condition 4.3.10
EXAMPLE Boiler No. 1	Wood-Fired Boiler	PM	Multiclone	45CSR§2-4.1.c.; 9.0 lb/hr	Monitor pressure drop across multiclone: Weekly inspection of multiclone

[a] If a control device is common to more than one PSEU, one monitoring plan may be submitted for the control device with the affected PSEUs identified and any conditions that must be maintained or monitored in accordance with 40 CFR §64.3(a). If a single PSEU is controlled by more than one control device similar in design and operation, one monitoring plan for the applicable control devices may be submitted with the applicable control devices identified and any conditions that must be maintained or monitored in accordance with 40 CFR §64.3(a).

[b] Indicate the emission limitation or standard for any applicable requirement that constitutes an emission limitation, emission standard, or standard of performance (as defined in 40 CFR §64.1).

[c] Indicate the monitoring requirements for the PSEU that are required by an applicable regulation or permit condition.

CAM MONITORING APPROACH CRITERIA

Complete this section for **EACH** PSEU that needs to be addressed in this CAM plan submittal. This section may be copied as needed for each PSEU. This section is to be used to provide monitoring data and information for EACH indicator selected for EACH PSEU in order to meet the monitoring design criteria specified in 40 CFR §64.3 and §64.4. if more than two indicators are being selected for a PSEU or if additional space is needed, attach and label accordingly with the appropriate PSEU designation, pollutant, and indicator numbers.

4a) PSEU Designation: 1B	**4b) Pollutant:** PM	**4c) [a] Indicator No. 1:** Opacity	**4d) [a] Indicator No. 2:** **Baghouse Cleaning Frequency**
5a) GENERAL CRITERIA Describe the MONITORING APPROACH used to measure the indicators:		Opacity is measured and recorded by a certified opacity monitoring system. There is a single stack and a single opacity monitor that service both units at North Branch.	Baghouse Cleaning Frequency is measured as "minutes between baghouse cleaning cycles including the actual fixed cleaning time" or "minutes between the beginning of the baghouse cleaning cycle to the beginning of the next baghouse cleaning cycle" These cleaning cycles take place automatically. Supplementary actions are taken in the event that baghouse cleaning cycles increase.
[b] Establish the appropriate INDICATOR RANGE or the procedures for establishing the indicator range which provides a reasonable assurance of compliance:		Opacity is continuously monitored. These continuous values are reduced to six-minute block averages. An excursion of opacity is defined as any six-minute period during any one-hour period that exceeds 10% opacity.	The range of cleaning cycles may vary from 30 minutes or less to 90 minutes and greater. Diffierential Pressure and Opacity triggers the frequency of these cleaning cycles. • Action Level I – Baghouse Cleaning Frequency ≥ 45 and < 50 minutes (7 day rolling average) • Action Level II – Baghouse Cleaning Frequency ≥ 40 and < 45 (7 day rolling average) Action Level III - Baghouse Cleaning Frequency < 40 minutes (7 day rolling average)
5b) PERFORMANCE CRITERIA Provide the SPECIFICATIONS FOR OBTAINING REPRESENTATIVE DATA, such as detector location, installation specifications, and minimum acceptable accuracy:		These units are subject to the federal New Source Performance Standard (NSPS) for electric utility steam generating units. As such, opacity monitoring is required and the location of the monitors is specified in 40 CFR 60, Appendix B, Performance Specification 1 (PS-1). The COMS was installed in accordance with PS-1.	NA, COMS satisfy 40 CFR 64.3(b).
[c] For new or modified monitoring equipment, provide VERIFICATION PROCEDURES, including manufacturer's recommendations, TO CONFIRM THE OPERATIONAL STATUS of the monitoring:		This provision of the CAM program applies to facilities that are proposing monitoring methods that are not otherwise required. Since the operation of the COMS is otherwise required, this provision is not applicable.	NA

Provide QUALITY ASSURANCE AND QUALITY CONTROL (QA/QC) PRACTICES that are adequate to ensure the continuing validity of the data, (i.e., daily calibrations, visual inspections, routine maintenance, RATA, etc.):	The CAM program requires "quality assurance and control practices that are adequate to ensure the continuing validity of the data." This COMS was installed and evaluated in accordance with PS-1. Zero and span drift are checked daily and filter audits are performed in accordance with PS-1.	NA
[d] Provide the MONITORING FREQUENCY:	The monitoring frequency is continuous.	daily
Provide the DATA COLLECTION PROCEDURES that will be used:	The data are collected by a computerized data acquisition and handling system (DAHS). This system collects and retains all relevant opacity data.	Events and corrective actions are logged as needed.
Provide the DATA AVERAGING PERIOD for the purpose of determining whether an excursion or exceedance has occurred:	The averaging period is on a six-minute block basis.	NA

[a] Describe all indicators to be monitored which satisfies 40 CFR §64.3(a). Indicators of emission control performance for the control device and associated capture system may include measured or predicted emissions (including visible emissions or opacity), process and control device operating parameters that affect control device (and capture system) efficiency or emission rates, or recorded findings of inspection and maintenance activities.

[b] Indicator Ranges may be based on a single maximum or minimum value or at multiple levels that are relevant to distinctly different operating conditions, expressed as a function of process variables, expressed as maintaining the applicable indicator in a particular operational status or designated condition, or established as interdependent between more than one indicator. For CEMS, COMS, or PEMS, include the most recent certification test for the monitor.

[c] The verification for operational status should include procedures for installation, calibration, and operation of the monitoring equipment, conducted in accordance with the manufacturer's recommendations, necessary to confirm the monitoring equipment is operational prior to the commencement of the required monitoring.

[d] Emission units with post-control PTE ≥ 100 percent of the amount classifying the source as a major source (i.e., Large PSEU) must collect four or more values per hour to be averaged. A reduced data collection frequency may be approved in limited circumstances. Other emission units must collect data at least once per 24 hour period.

RATIONALE AND JUSTIFICATION

Complete this section for EACH PSEU that needs to be addressed in this CAM plan submittal. This section may be copied as needed for each PSEU. This section is to be used to provide rationale and justification for the selection of EACH indicator and monitoring approach and EACH indicator range in order to meet the submittal requirements specified in 40 CFR §64.4.

6a) PSEU Designation:	6b) Regulated Air Pollutant:
Unit 1B	PM

7) **INDICATORS AND THE MONITORING APPROACH**: Provide the rationale and justification for the selection of the indicators and the monitoring approach used to measure the indicators. Also provide any data supporting the rationale and justification. Explain the reasons for any differences between the verification of operational status or the quality assurance and control practices proposed, and the manufacturer's recommendations. (If additional space is needed, attach and label accordingly with the appropriate PSEU designation and pollutant):

Indicator 1:

Because the units at North Branch use baghouses to comply with PM limits (opacity limits), failures of the baghouses to control PM emissions will be immediately obvious in terms of opacity. The existing permits for North Branch contain requirements for opacity that are significantly more stringent than the applicable New Source Performance Standard (NSPS) for this facility category. Therefore Dominion proposes that the permitted opacity limit of 10% with no more than one six-minute block average an appropriate indicator that the units are operating in compliance with their associated PM limits.

There are special criteria in the CAM program for the use of continuous monitoring systems, including COMs.

First if the use of a COMS is required pursuant to other authority under the Act, then the use of a COMS is required to satisfy CAM. In this case, the use of a COMS is required by the applicable NSPS and is therefore required as an element of the CAM program.

Second, the use of COMs that are installed in accordance with NSPS requirements is automatically "deemed to satisfy the general design criteria" of the CAM program. (§64.3(d)(2)(ii)) This provision of the regulations also notes that a COMS may be subject to additional requirements to ensure that the selected indicator ranges are relevant. This additional testing is not believed to be necessary for this facility. Because the 10% opacity limit for this facility is so stringent, it would serve no useful purpose to demonstrate that compliance with the PM limits can still be achieved at some level other than 10% opacity. Therefore, we believe that the 10% opacity limit reflects the correct and appropriate indicator range without additional testing.

Third, the monitoring system must allow for the reporting of excursions consistent with any period for reporting of exceedances in an underlying requirement. (§64.3(d)(3)(i)) Historically, there has been no "periodic" reporting of exceedances of PM emissions: these were based solely on stack tests, and failures were (and continue to be) immediately reportable in accordance with regulatory requirements. However, there are procedures for reporting excess opacity, and these procedures should remain acceptable for CAM purposes.

Indicator 2:

In addition to monitoring opacity continuously on Units 1A and 1B, North Branch's current Parametric Monitoring Plan, (which is an attachment to the Title V permit) already has requirements and procedures that the station must follow to ensure that the baghouse is operating efficiently. The "baghouse cleaning frequency" serves as an appropriate indicator that the units are operating in compliance with their associated PM limits. Baghouse Cleaning Frequency is measured as "minutes between baghouse cleaning cycles including the actual fixed cleaning time" or "minutes between the beginning of the baghouse cleaning cycle to the beginning of the next baghouse cleaning cycle". These cleanings take place automatically. Supplementary actions are taken in the event that the baghouse cleaning cycles increase. These actions are supplemental to the primary indicator of opacity and are taken to determine which of the two units may be causing an increase in opacity.

Continuous opacity monitoring and appropriate responses to the baghouses that are initiated by the clean cycle frequencies together will provide a reasonable assurance of ongoing compliance with the PM limits for this facility and meet the intent of the CAM program.

8) **INDICATOR RANGES**: Provide the rationale and justification for the selection of the indicator ranges. The rationale and justification shall indicate how EACH indicator range was selected by either a COMPLIANCE OR PERFORMANCE TEST, a TEST PLAN AND SCHEDULE, or by ENGINEERING ASSESSMENTS. Depending on which method is being used for each indicator range, include the specific information required below for that specific indicator range. (If additional space is needed, attach and label accordingly with the appropriate PSEU designation and pollutant):

- COMPLIANCE OR PERFORMANCE TEST (Indicator ranges determined from control device operating parameter data obtained during a compliance or performance test conducted under regulatory specified conditions or under conditions representative of maximum potential emissions under anticipated operating conditions. Such data may be supplemented by engineering assessments and manufacturer's recommendations). The rationale and justification shall INCLUDE a summary of the compliance or performance test results that were used to determine the indicator range, and documentation indicating that no changes have taken place that could result in a significant change in the control system performance or the selected indicator ranges since the compliance or performance test was conducted.

- TEST PLAN AND SCHEDULE (Indicator ranges will be determined from a proposed implementation plan and schedule for installing, testing, and performing any other appropriate activities prior to use of the monitoring). The rationale and justification shall INCLUDE the proposed implementation plan and schedule that will provide for use of the monitoring as expeditiously as practicable after approval of this CAM plan, except that in no case shall the schedule for completing installation and beginning operation of the monitoring exceed 180 days after approval.

- ENGINEERING ASSESSMENTS (Indicator Ranges or the procedures for establishing indicator ranges are determined from engineering assessments and other data, such as manufacturers' design criteria and historical monitoring data, because factors specific to the type of monitoring, control device, or PSEU make compliance or performance testing unnecessary). The rationale and justification shall INCLUDE documentation demonstrating that compliance testing is not required to establish the indicator range.

RATIONALE AND JUSTIFICATION:

The CAM plan is required to provide reasonable assurance that the PM emissions are meeting the specified emission limit.

Stack testing for PM using EPA Reference Method 5 is conducted every three years under the Title V permit and annually under the Decree. Method 5 testing has demonstrated a reasonable margin of compliance with PM emission limits. In 2004 through 2009 both units were tested for PM. The results were as follows:

2004 stack test: Particulate Matter Sampling Results: 0.0026 lb/mmBtu
2005 stack test: Particulate Matter Sampling Results: 0.0191 lb/mmBtu
2006 stack test: Particulate Matter Sampling Results: 0.006 lb/mmBtu
2007 stack test: Particulate Matter Sampling Results: 0.0136 lb/mmBtu
2008 stack test: Particulate Matter Sampling Results: 0.0064 lb/mmBtu
2009 stack test: Particulate Matter Sampling Results: 0.005 lb/mmBtu

Dominion will continue to conduct PM testing in accordance with the renewed Title V permit and the requirements of the Consent Decree.

The PM results for both units were less than and did not exceed the most restrictive emission limit of 0.03 lb/mmBtu when either or both of the boilers are in operation. CAM is designed to provide data that "provide a reasonable assurance of compliance with emission limitations or standards for the anticipated range of operations" at an emissions unit. Because the tested emissions from this facility are within the respective emission limits, Dominion proposes that opacity measured by the continuous opacity monitoring system (COMS) will be adequate to meet the requirements of CAM along with the parametric monitoring described in subsequent sections. A sample CAM table has also been attached.

Indicator 1:
The most important criteria from §64.3(a) are contained in paragraph (2). This paragraph requires that operation of the facility within the selected ranges of the indicators provides a "reasonable assurance of ongoing compliance with emission limitations for the anticipated range of operating conditions." The proposed range of indicators is the opacity limit for this facility; i.e., continuous operation between 0% and 10% opacity per hour, with no six-minute period over 10% opacity. These units are controlled by baghouses, and malfunctions that lead to excess particulate emissions should be immediately obvious from an opacity standpoint. Therefore, operation of the facility in compliance with its opacity standard will represent a reasonable assurance of ongoing compliance with emission limitations for the anticipated range of operating conditions. The CAM rule does not require that testing be conducted over the entire range of operating conditions, but emissions units should be tested at conditions that are representative of maximum emissions. (§64.4(c)(1)) Since past tests were conducted at the operating rates that represent maximum emissions (i.e., at least 90% of maximum capacity), this provision of the regulations is met.

This range is appropriate as a reasonable assurance of compliance with the PM mass emissions limits because past testing demonstrated a margin of compliance with the limits and the opacity is averaged on a much shorter period (six minutes vs. average of three one-hour test runs). In other words, even if there is a spike in opacity, it is not necessarily indicative of an exceedance of the particulate limits.

Indicator 2:

The range of baghouse cleaning cycles may vary from 30 minutes or less to 90 minutes and greater. Differential pressure and opacity triggers the frequency of these cleaning cycles, which triggers the station to take necessary actions to keep these baghouses in good operating conditions. Station personnel monitor the cleaning cycles of Baghouses A and B on a daily basis, if the cleaning cycle increases, then that is indicative of a problem with either (or both) baghouses. Once the problem is identified, corrective actions will be taken. The action levels are based on the frequencies of the cleaning cycles.

North Branch Power Station proposes that the continuous opacity monitoring and appropriate responses to the baghouses that are initiated by the clean cycle frequencies together constitute CAM for Units 1A and 1B.

There have been no changes that have taken place that could result in a significant change in the control system performance or the selected indicator ranges since the compliance tests were conducted. These baghouses are maintained on a continuous basis. The baghouses go through a continuous cleaning cycle, and bags are changed as needed. There is a preventive maintenance plan procedure that is performed on the baghouse on a monthly and annual basis

North Branch Power Station
Compliance Assurance Monitoring Plan

Emission Unit	**CFB Boilers 1A (Emission unit A) & 1B (Emission unit B)**
Description	Two Circulating Fluidized Bed boilers fueled with coal and waste coal.
Control Device	Baghouses
Regulated Pollutant	PM
Emission Limit	PM- 0.03 lbs/mmBtu and 35.8 lbs/hr (both boilers)
I. CAM Indicator #1	Opacity.
Measurement Approach	Continuous opacity monitor (COMS).
Monitoring Frequency	Continuous
Justification	COMS satisfies applicable monitoring requirements and performance specifications as specified in 40 CFR 64.3, "Special criteria for the use of continuous emission, opacity or predictive monitoring systems".
II. Indicator Range	Continuous operation between 0% - 10% opacity per hour on a six minute block basis. Excursion is one six-minute period > 10% opacity
III. Performance Criteria **Data Representativeness**	Location and installation of monitors is per 40 CFR 60, Appendix B, Performance Specification 1 (PS-1).
QA/QC Practices and Criteria	COMS was installed and evaluated in accordance with PS-1. Zero and span drift are checked daily and filter audits are performed in accordance with PS-1.
Data Collection Procedures	Data are collected by computerized data acquisition and handling system (DAHS). The system collects and retains all relevant opacity data.
Averaging period	Six-minute block basis.

Emission Unit	**CFB Boilers 1A (Emission unit A) & 1B (Emission unit B)**
Description	Two Circulating Fluidized Bed boilers fueled with coal and waste coal.
Control Device	Baghouses
Regulated Pollutant	PM
Emission Limit	PM- 0.03 lbs/mmBtu and 35.8 lbs/hr (both boilers)
I. CAM Indicator #2	Baghouse Cleaning Frequency
Measurement Approach	Baghouse Cleaning Frequency is measured as "minutes between baghouse cleaning cycles including the actual fixed cleaning time" or "minutes between the beginning of the baghouse cleaning cycle to the beginning of the next baghouse cleaning cycle" These cleaning cycles take place automatically. Supplementary actions are taken in the event that baghouse cleaning cycles increase : • Monitor cleaning cycle of Baghouses A and B on a daily basis, if cleaning cycle increases, then that is indicative of a problem with either (or both) baghouses • Once problem is identified corrective actions will be taken.
Monitoring Frequency	daily
Justification	These actions are supplemental to the primary indicator of opacity and are taken to determine which of the two units may be causing an increase in opacity.
II. Indicator Range	The range of cleaning cycles may vary from 30 minutes or less to 90 minutes and greater. Differential Pressure and Opacity triggers the frequency of these cleaning cycles. • Action Level I – Baghouse Cleaning Frequency ≥ 45 and < 50 minutes (7 day rolling average) • Action Level II – Baghouse Cleaning Frequency ≥ 40 and < 45 (7 day rolling average) • Action Level III - Baghouse Cleaning Frequency < 40 minutes (7 day rolling average)
III. Performance Criteria **Data Representativeness**	NA. COMS satisfy 40 CFR 64.3(b).
QA/QC Practices and Criteria	NA
Data Collection Procedures	Events and corrective actions are logged as needed.
Averaging period	NA

* North Branch is currently performing these operational procedures as part of their Parametric Monitoring Plan for Particulate Emissions

ATTACHMENT I
EMISSION CALCULATIONS

North Branch Power Station
Emission Calculations for: 1-E

Emission Unit ID	Emission Point ID	Pollution Contro Devicel ID	Pollution Control Device Description	Source ID #	Source Description	Full Load Thruput (tph)	Typical Eq. Full Load Hours	Max. Hours	Emission Factor	Emission Factor Units	Emission Factor Source	Control Efficiency	Actual Emissions (lb/hr)	Actual Emissions (TPY)	Maximum Uncontrolled (lb/hr)	Maximum Uncontrolled (TPY)	Permit Limit (lb/hr)	Potential Emissions (lb/hr)	Potential Emissions (TPY)
A and B	1-E	DLI1, BH-A, &BH-B	Dry (pulverized) Limestone injection, Baghouse A & B	Boiler 1A & Boiler 1B	CFB Boiler 1A & 1B Exhaust, CO (Coal)	60.8	8059	8760	0.0328	lb/MMBtu	Stack Test (1)	-	39	158	39	172	203	203	889
A and B	1-E	DLI1, BH-A, &BH-B	Dry (pulverized) Limestone injection, Baghouse A & B	Boiler 1A & Boiler 1B	CFB Boiler 1A & 1B Exhaust, NO_X (Coal)	60.8	8059	8760	0.378	lb/MMBtu	CEMS (1) (2)	-	451	1816	451	1975	478	478	2094
A and B	1-E	DLI1, BH-A, &BH-B	Dry (pulverized) Limestone injection, Baghouse A & B	Boiler 1A & Boiler 1B	CFB Boiler 1A & 1B Exhaust, Lead (Coal)	60.8	8059	8760	1.02E-06	lb/MMBtu	Stack Test (1)	-	0.001	0.005	0.001	0.005	0.0095	0.0095	0.04
A and B	1-E	DLI1, BH-A, &BH-B	Dry (pulverized) Limestone injection, Baghouse A & B	Boiler 1A & Boiler 1B	CFB Boiler 1A & 1B Exhaust, PM (Coal)	60.8	8059	8760	6.40E-03	lb/MMBtu	Stack Test (1)	99.00%	8	31	8	33	35.8	35.8	157
A and B	1-E	DLI1, BH-A, &BH-B	Dry (pulverized) Limestone injection, Baghouse A & B	Boiler 1A & Boiler 1B	CFB Boiler 1A & 1B Exhaust, SO_2 (Coal)	60.8	8059	8760	0.2617673	lb/MMBtu	CEMS (1) (2)	95%	313	1259	313	1369	810	810	3548
A and B	1-E	DLI1, BH-A, &BH-B	Dry (pulverized) Limestone injection, Baghouse A & B	Boiler 1A & Boiler 1B	CFB Boiler 1A & 1B Exhaust, VOC (Coal)	60.8	8059	8760	0.002	lb/MMBtu	Stack Test (1)	-	3	12	3	13	6	6	26
A and B	1-E	DLI1, BH-A, &BH-B	Dry (pulverized) Limestone injection, Baghouse A & B	Boiler 1A & Boiler 1B	CFB Boiler 1A & 1B Exhaust, Mercury (Coal)	60.8	8059	8760	0.34	ppm Hg	% Release x Mercury in Coal x Coal Consumed	-	3.46E-05	0.0001	4.55E-05	1.99E-04	0.0206	0.0206	0.09
A and B	1-E	DLI1, BH-A, &BH-B	Dry (pulverized) Limestone injection, Baghouse A & B	Boiler 1A & Boiler 1B	CFB Boiler 1A & 1B Exhaust, Fluorides (Coal)	60.8	8059	8760	1.020E-04	lb/MMBtu	Stack Test (1)	-	0.12	0	0.1	1	0.639	0.639	3
A and B	1-E	DLI1, BH-A, &BH-B	Dry (pulverized) Limestone injection, Baghouse A & B	Boiler 1A & Boiler 1B	CFB Boiler 1A & 1B Exhaust, Berylium (Coal)	60.8	8059	8760	4.790E-08	lb/MMBtu	Stack Test (1)	-	0.0001	0.0002	0.0001	0.0003	0.00019	0.00019	0
A and B	1-E	DLI1, BH-A, &BH-B	Dry (pulverized) Limestone injection, Baghouse A & B	Boiler 1A & Boiler 1B	CFB Boiler 1A & 1B Exhaust, CO (Propane)	13,007 (4)	228	8760	7.5	lb/kgal	AP-42 Table 1.5-1	-	1702.03	194.03			203	203	889
A and B	1-E	DLI1, BH-A, &BH-B	Dry (pulverized) Limestone injection, Baghouse A & B	Boiler 1A & Boiler 1B	CFB Boiler 1A & 1B Exhaust, PM (Propane)	13,007 (4)	228	8760	1.11E+00	lb/kgal	FIRE	99.00%	660.28	75.27			35.8	35.8	157
A and B	1-E	DLI1, BH-A, &BH-B	Dry (pulverized) Limestone injection, Baghouse A & B	Boiler 1A & Boiler 1B	CFB Boiler 1A & 1B Exhaust, VOC (Propane)	13,007 (4)	228	8760	0.459	lb/kgal	FIRE	-	274.02	31.24			6	6	26

Notes:

(1) Emission factor includes control.
(2) CEMS emission factors are based on 2008 data and include both emissions from coal and propane.
(3) Concentration of Mercury in Coal from 1999 ICR Project (ppm).
(4) In units of gallons per year.
Input data not listed in the table, but used in the emissions calculations is listed below:

Description	Value	Units	Comment
Unit Capacity	597	MMBtu/hr	per Unit
Heating Value of Coal	9,822	Btu/lb	Average from 2008 data
Heating Value of Propane	91,800	Btu/gal	Lower Heating Value
Full load throughput of Coal	30	tons / hr	per Unit
Full load throughput of Propane	6,503	gal/hr	per Unit
Annual Coal Consumed	373,094	TPY	Throughput is for both Units and is based on 2008 data
Annual Propane Consumed	226,937	gal/yr	Throughput is for both Units and is based on 2008 data
% Hg Released	0.11	%	% released is from 2001 EPA Hg Guidance
Hours of Operation Total	8,287	hr/yr	Based on 2008 data.
Hours of Operation Coal	8,059	hr/yr	Total Hours minus Propane Hours
Hours of Operation Propane	228	hr/yr	Based on fifteen startups and 2 refectory cures in 2008.

North Branch Power Station
Emission Calculations for: 2-E

Emission Unit ID	Emission Point ID	Pollution Contro Devicel ID	Pollution Control Device Description	Source ID #	Source Description	Full Load Throughput (tph)	Typical Eq. Full Load Hours	Max. Hours	Emissio n Factor	Emission Factor Units	Emission Factor Source	Control Efficiency	Actual Emissions (lb/hr)	Actual Emissions (TPY)	Maximum Uncontrolled (lb/hr)	Maximum Uncontroll ed (TPY)	Permit Limit (lb/hr)	Potential Emissions (lb/hr)	Potential Emissions (TPY)
BN-MH-2A	2-E	N/A	Partial Enclosure & Water Spray	N/A	Fuel Hoppers	500	0.0 (1)	8760	0.0011	lb/ton	AP-42, Section 13.2.4, Equation 1	0.5	0.00	0.00	0.55	2.41	N/A	0.55	2.41
BN-MH-2B	2-E	N/A	Partial Enclosure & Water Spray	N/A	Fuel Hoppers	500	0.0 (1)	8760	0.0011	lb/ton	AP-42, Section 13.2.4, Equation 1	0.5	0.00	0.00	0.55	2.41	N/A	0.55	2.41
Annual Emissions PM													0.00	0.00	1.10	4.82	-	1.10	4.82

NOTES:

(1) Emission unit is not currently in use.

Input data not listed in the table, but used in the emissions calculations is listed below:

Description	Value	Units	Comment
Percent H2O Coal	6.0	%	Value from 2008 Annual Emissions Spreadsheet
Mean Wind Speed	9.1	mph	Value from 2008 Annual Emissions Spreadsheet
Actual Coal Throughput Rate	0.0 (1)	TPY	Actual throughput equal to zero, since emission unit is not in use.

North Branch Power Station
Emission Calculations for: 3-E

Emission Unit ID	Emission Point ID	Pollution Contro Devicel ID	Pollution Control Device Description	Source ID #	Source Description	Full Load Throughput (tph)	Typical Eq. Full Load Hours	Max. Hours	Emission Factor	Emission Factor Units	Emission Factor Source	Control Efficiency	Actual Emissions (lb/hr)	Actual Emissions (TPY)	Maximum Uncontrolled (lb/hr)	Maximum Uncontrolled (TPY)	Permit Limit (lb/hr)	Potential Emissions (lb/hr)	Potential Emissions (TPY)
4-S	3-E	FE & BH-4C	Full Enclouse and Baghouse 4C	N/A	Fuel Screening Building	325	0.0 (2)	8760	0.0011	lb/ton	AP-42, Section 13.2.4,	0.99	0.000	0.00	0.3575	1.57	2.12	2.12	9.29
VS-MH-1	3-E	FE	Full Enclouse	N/A	Vibrating Screen	500	0.0 (2)	8760	0.0011	lb/ton	AP-42, Section 13.2.4,	0.99	0.000	0.00	0.55	2.41	N/A	0.55	2.41
Annual Emissions PM													0.00	0.00	0.91	3.97	-	2.67	11.69

NOTES:
(1) Emission unit is not currently in use.
Input data not listed in the table, but used in the emissions calculations is listed below:

Description	Value	Units	Comment
Percent H2O Coal	6.0	%	Value from Annual Emissions Spreadsheet
Mean Wind Speed	9.1	mph	Value from Annual Emissions Spreadsheet
Actual Coal Throughput Rate	0.0 (1)	tph	Actual throughput equal to zero, since emission unit is not in use.

North Branch Power Station
Emission Calculations for: 4-E

Emission Unit ID	Emission Point ID	Pollution Contro Devicel ID	Pollution Control Device Description	Source ID #	Source Description	Full Load Throughput (tph)	Typical Eq. Full Load Hours	Max. Hours	Emissio n Factor	Emission Factor Units	Emission Factor Source	Control Efficiency	Actual Emissions (lb/hr)	Actual Emissions (TPY)	Maximum Uncontrolled (lb/hr)	Maximum Uncontroll ed (TPY)	Permit Limit (lb/hr)	Potential Emissions (lb/hr)	Potential Emissions (TPY)
5-S	4-E	BH-5C	Baghouse 5C	N/A	Crusher Building	500	0.0 (2)	8760	0.0011	lb/ton	AP-42, Section 13.2.4,	0.99	0.000	0.00	0.55	2.41	1.208 (1)	1.208	5.29
CR-MH-2A	4-E	FE & BH-5C	Full Enclosure & Baghouse 5C	N/A	Fuel Hammer Mill 2A	250	0.0 (2)	8760	0.0011	lb/ton	AP-42, Section 13.2.4,	0.99	0.000	0.00	0.275	1.20	0.604 (1)	0.604	2.65
CR-MH-2B	4-E	FE & BH-5C	Full Enclosure & Baghouse 5C	N/A	Fuel Hammer Mill 2B	250	0.0 (2)	8760	0.0011	lb/ton	AP-42, Section 13.2.4,	0.99	0.000	0.00	0.275	1.20	0.604 (1)	0.604	2.65
CR-MH-2C	4-E	FE & BH-5C	Full Enclosure & Baghouse 5C	N/A	Fuel Hammer Mill 2C	250	0.0 (2)	8760	0.0011	lb/ton	AP-42, Section 13.2.4,	0.99	0.000	0.00	0.275	1.20	0.604 (1)	0.604	2.65
CR-LH-2B	4-E	FE	Full Enclosur	N/A	Limestone Crusher 2C	50	606	8760	0.0052	lb/ton	AP-42, Section 13.2.4,	0.99	0.010	0.003	0.26	1.14	N/A	0.26	1.14
											Annual Emissions PM		0.01	0.00	1.64	7.16	-	3.28	14.37

NOTES:

(1) The permit limit for BH-5C is 3.02 lb/hr, this baghouse receives emissions from multiple processes. Therefore, the permit limit for this baghouse was prorated based on full load throughput for each process.

(2) Emission unit is not currently in use.

(1) Emission unit is not currently in use.

Input data not listed in the table, but used in the emissions calculations is listed below:

Description	Value	Units	Comment
Percent H2O Coal	6.0	%	Value from Annual Emissions Spreadsheet
Percent H2O Limestone	2.0	%	Value from Annual Emissions Spreadsheet
Mean Wind Speed	9.1	mph	Value from Annual Emissions Spreadsheet
Actual Coal Throughput Rate	0.0 (2)	tph	Actual throughput equal to zero, since emission unit is not in use.
Actual Limestone Throughput Rate	121,205	TPY	Value from 2008 Annual Emissions Spreadsheet
Hours of Operation Limestone	606	hr/yr	Based on 2008 data, prorated by MMBtu

North Branch Power Station
Emission Calculations for: 5-E

Emission Unit ID	Emission Point ID	Pollution Contro Devicel ID	Pollution Control Device Description	Source ID #	Source Description	Full Load Throughput (tph)	Typical Eq. Full Load Hours	Max. Hours	Emissio n Factor	Emission Factor Units	Emission Factor Source	Control Efficiency	Actual Emissions (lb/hr)	Actual Emissions (TPY)	Maximum Uncontrolled (lb/hr)	Maximum Uncontrolled (TPY)	Permit Limit (lb/hr)	Potential Emissions (lb/hr)	Potential Emissions (TPY)
BN-AH-3	5-E	BH-6C	Baghouse 6C	N/A	Ash Storage Silo	87.6	2970	8760	0.0005	lb/ton	AP-42, Section 13.2.4,	0.99	0.0004	0.001	0.0438	0.19	1.230	1.23	5.39
Annual Emissions PM													0.0004	0.0007	0.04	0.19	-	1.23	5.39

NOTES:

Input data not listed in the table, but used in the emissions calculations is listed below:

Description	Value	Units	Comment
Percent H2O Ash	10.0	%	Value from Annual Emissions Spreadsheet
Mean Wind Speed	9.1	mph	Value from Annual Emissions Spreadsheet
Actual Ash Throughput Rate	260,134	TPY	Value from 2008 Annual Emissions Spreadsheet

North Branch Power Station
Emission Calculations for: 6-E & 12-E

Emission Unit ID	Emission Point ID	Pollution Contro Devicel ID	Pollution Control Device Description	Source ID #	Source Description	Full Load Throughput (tph)	Typical Eq. Full Load Hours	Max. Hours	Emissio n Factor	Emission Factor Units	Emission Factor Source	Control Efficiency	Actual Emissions (lb/hr)	Actual Emissions (TPY)	Maximum Uncontrolled (lb/hr)	Maximum Uncontrolled (TPY)	Permit Limit (lb/hr)	Potential Emissions (lb/hr)	Potential Emissions (TPY)
Silo 6A	6-E or 12-E	BH-8C	Baghouse 8C	N/A	Fuel Storage Silo and Transfer to Conveyor 1F	500	(1)	8760	0.0011	lb/ton	AP-42, Section 13.2.4, Equation 1	0.99	0.0055	0.000	0.55	2.41	N/A	0.55	2.41
Silo 6B	6-E or 12-E	BH-8C	Baghouse 8C	N/A	Fuel Storage Silo and Transfer to Conveyor 1F	500	(1)	8760	0.0011	lb/ton	AP-42, Section 13.2.4, Equation 1	0.99	0.0055	0.000	0.55	2.41	N/A	0.55	2.41
BN-MH-1A1	6-E	BH-7C	Baghouse 7C	N/A	Northeast Fuel Bunker	400	8059	8760	0.0011	lb/ton	AP-42, Section 13.2.4, Equation 1	0.99	0.0001	0.001	0.44	1.93	0.77 (2)	0.77	3.37
BN-MH-1A2	6-E	BH-7C	Baghouse 7C	N/A	Northwest Fuel Bunker	400	8059	8760	0.0011	lb/ton	AP-42, Section 13.2.4, Equation 1	0.99	0.0001	0.001	0.44	1.93	0.77 (2)	0.77	3.37
BN-MH-1B1	12-E	BH-13C	Baghouse 13C	N/A	Southeast Fuel Bunker	400	8059	8760	0.0011	lb/ton	AP-42, Section 13.2.4, Equation 1	0.99	0.0001	0.001	0.44	1.93	0.77 (2)	0.77	3.37
BN-MH-1B2	12-E	BH-13C	Baghouse 13C	N/A	Southwest Fuel Bunker	400	8059	8760	0.0011	lb/ton	AP-42, Section 13.2.4, Equation 1	0.99	0.0001	0.001	0.44	1.93	0.77 (2)	0.77	3.37

Annual Emissions PM	0.01	0.00	2.86	12.53	-	4.18	18.31

NOTES:

(1) Emission unit is not currently in use.

(2) The permit limit for BH-7C and BH-13C is 1.54 lb/hr each, these baghouse each control emissions from two bunkers. Therefore, the permit limit was divided evenly between each bunker.

Input data not listed in the table, but used in the emissions calculations is listed below:

Description	Value	Units	Comment
Percent H2O Coal	6.0	%	Value from Annual Emissions Spreadsheet
Mean Wind Speed	9.1	mph	Value from Annual Emissions Spreadsheet
Actual Coal Throughput Rate	372,694	TPY	Value from 2008 Annual Emissions Spreadsheet
Hours of Operation Coal	8,059	hr/yr	Based on 2008 data.

North Branch Power Station
Emission Calculations for: 7-E

Emission Unit ID	Emission Point ID	Pollution Contro Devicel ID	Pollution Control Device Description	Source ID #	Source Description	Full Load Throughput (tph)	Typical Eq. Full Load Hours	Max. Hours	Emissio n Factor	Emission Factor Units	Emission Factor Source	Control Efficiency	Actual Emissions (lb/hr)	Actual Emissions (TPY)	Maximum Uncontrolled (lb/hr)	Maximum Uncontrolled (TPY)	Permit Limit (lb/hr)	Potential Emissions (lb/hr)	Potential Emissions (TPY)
BN-LH-2	7-E	FE	Full Enclosure	N/A	Uncrushed Limestone Storage Bin	200	606	8760	0.0052	lb/ton	AP-42, Section 13.2.4,	0.99	0.0104	0.003	1.04	4.56	0.130	0.13	0.57

Annual Emissions PM	0.0104	0.0032	1.04	4.56	-	0.13	0.57

NOTES:

Input data not listed in the table, but used in the emissions calculations is listed below:

Description	Value	Units	Comment
Percent H2O Limestone	2.0	%	Value from Annual Emissions Spreadsheet
Mean Wind Speed	9.1	mph	Value from Annual Emissions Spreadsheet
Actual Limestone Throughput Rate	121,205	TPY	Value from 2008 Annual Emissions Spreadsheet
Hours of Operation Limestone	606	hr/yr	Based on 2008 data.

North Branch Power Station
Emission Calculations for: 8-E

Emission Unit ID	Emission Point ID	Pollution Contro Devicel ID	Pollution Control Device Description	Source ID #	Source Description	Full Load Throughput (tph)	Typical Eq. Full Load Hours	Max. Hours	Emissio n Factor	Emission Factor Units	Emission Factor Source	Control Efficiency	Actual Emissions (lb/hr)	Actual Emissions (TPY)	Maximum Uncontrolled (lb/hr)	Maximum Uncontrolled (TPY)	Permit Limit (lb/hr)	Potential Emissions (lb/hr)	Potential Emissions (TPY)
BN-LH-3	8-E	FE & BH-9C	Full Enclosure & Baghouse 9C	N/A	Crushed Limestone Storage Bin	250	606	8760	0.0052	lb/ton	AP-42, Section 13.2.4,	0.99	0.0104	0.003	1.3	5.69	0.530	0.53	2.32
Annual Emissions PM													0.0104	0.0032	1.30	5.69	-	0.53	2.32

NOTES:

Input data not listed in the table, but used in the emissions calculations is listed below:

Description	Value	Units	Comment
Percent H2O Limestone	2.0	%	Value from Annual Emissions Spreadsheet
Mean Wind Speed	9.1	mph	Value from Annual Emissions Spreadsheet
Actual Limestone Throughput Rate	121,205	TPY	Value from 2008 Annual Emissions Spreadsheet
Hours of Operation Limestone	606	hr/yr	Based on 2008 data,

North Branch Power Station
Emission Calculations for: 9-E & 16-E

Emission Unit ID	Emission Point ID	Pollution Contro Devicel ID	Pollution Control Device Description	Source ID #	Source Description	Full Load Throughput (tph)	Typical Eq. Full Load Hours	Max. Hours	Emissio n Factor	Emission Factor Units	Emission Factor Source	Control Efficiency	Actual Emissions (lb/hr)	Actual Emissions (TPY)	Maximum Uncontrolled (lb/hr)	Maximum Uncontrolled (TPY)	Permit Limit (lb/hr)	Potential Emissions (lb/hr)	Potential Emissions (TPY)
F-AH-2A	9-E	FE	Full Enclosure	N/A	Boiler A Ash Seperator	50	2,970	8760	0.0005	lb/ton	AP-42, Section 13.2.4, Equation 1	0.99	0.0001	0.0001	0.025	0.11	0.81	0.81	3.55
F-AH-2B	16-E	FE	Full Enclosure	N/A	Boiler B Ash Seperator	50	2,970	8760	0.0005	lb/ton	AP-42, Section 13.2.4, Equation 1	0.99	0.0001	0.0001	0.025	0.11	0.810	0.81	3.55
Annual Emissions PM													0.0001	0.0002	0.05	0.22	-	1.62	7.10

NOTES:

Input data not listed in the table, but used in the emissions calculations is listed below:

Description	Value	Units	Comment
Percent H2O Ash	10.0	%	Value from Annual Emissions Spreadsheet
Mean Wind Speed	9.1	mph	Value from Annual Emissions Spreadsheet
Actual Ash Throughput Rate	260,134	TPY	Value from 2008 Annual Emissions Spreadsheet
Hours of Operation Coal	2,970	hr/yr	Based on 2008 data.

North Branch Power Station
Emission Calculations for: 11-E

Emission Unit ID	Emission Point ID	Pollution Contro Devicel ID	Pollution Control Device Description	Source ID #	Source Description	Full Load Throughput (tph)	Typical Eq. Full Load Hours	Max. Hours	Emissio n Factor	Emission Factor Units	Emission Factor Source	Control Efficiency	Actual Emissions (lb/hr)	Actual Emissions (TPY)	Maximum Uncontrolled (lb/hr)	Maximum Uncontrolled (TPY)	Permit Limit (lb/hr)	Potential Emissions (lb/hr)	Potential Emissions (TPY)
BN-LH-1A	11-E	PE	Partial Enclosure	N/A	Limestone & Fuel Hoppers (Fuel)	100	2,364	8760	0.0011	lb/ton	AP-42, Section 13.2.4, Equation 1	0.7	0.0520	0.061	0.11	0.48	N/A	0.11	0.48
BN-LH-1B	11-E	PE	Partial Enclosure	N/A	Limestone & Fuel Hoppers (Fuel)	100	2,364	8760	0.0011	lb/ton	AP-42, Section 13.2.4, Equation 1	0.7	0.0520	0.061	0.11	0.48	N/A	0.11	0.48
BN-LH-1A	11-E	PE	Partial Enclosure	N/A	Limestone & Fuel Hoppers (Limestone)	100	606	8760	0.0052	lb/ton	AP-42, Section 13.2.4, Equation 1	0.7	0.3120	0.095	0.52	2.28	N/A	0.52	2.28
BN-LH-1B	11-E	PE	Partial Enclosure	N/A	Limestone & Fuel Hoppers (Limestone)	100	606	8760	0.0052	lb/ton	AP-42, Section 13.2.4, Equation 1	0.7	0.3120	0.095	0.52	2.28	N/A	0.52	2.28

Annual Emissions PM	0.0520	0.0615	0.11	0.48	-	0.11	0.48

NOTES:

Input data not listed in the table, but used in the emissions calculations is listed below:

Description	Value	Units	Comment
Percent H2O Limestone	2.0	%	Value from Annual Emissions Spreadsheet
Percent H2O Coal	6.0	%	Value from 2008 Annual Emissions Spreadsheet
Mean Wind Speed	9.1	mph	Value from Annual Emissions Spreadsheet
Annual Limestone Consumed	121,205	TPY	Value from 2008 Annual Emissions Spreadsheet
Hours of Operation Limestone Delivered	606	hr/yr	Based on 2008 data.
Annual Coal Consumed	372,694	TPY	Throughput is for both Units and is based on 2008 data
Hours of Operation Coal Delivered	2,364	hr/yr	Based on 2008 data.

North Branch Power Station
Emission Calculations for: 14-E

Emission Unit ID	Emission Point ID	Pollution Contro Devicel ID	Pollution Control Device Description	Source ID #	Source Description	Full Load Throughput (tph)	Typical Eq. Full Load Hours	Max. Hours	Emissio n Factor	Emission Factor Units	Emission Factor Source	Control Efficiency	Actual Emissions (lb/hr)	Actual Emissions (TPY)	Maximum Uncontrolled (lb/hr)	Maximum Uncontroll ed (TPY)	Permit Limit (lb/hr)	Potential Emissions (lb/hr)	Potential Emissions (TPY)
1A	14-E	PE	Partial Enclosure	N/A	Conveyor from Fuel Hoppers to Fuel Screening Building	500	0.0 (1)	8760	0.0011	lb/ton	AP-42, Section 13.2.4,	0.5	0.00	0.00	0.55	2.41	N/A	0.55	2.41
1C	14-E	PE	Partial Enclosure	N/A	Conveyor from Fuel Screening Building to Conveyor 1D	500	0.0 (1)	8760	0.0011	lb/ton	AP-42, Section 13.2.4,	0.5	0.00	0.00	0.55	2.41	N/A	0.55	2.41
1D	14-E	PE	Partial Enclosure	N/A	Conveyor from Conveyor 1C to Conveyor 1E	500	0.0 (1)	8760	0.0011	lb/ton	AP-42, Section 13.2.4,	0.5	0.00	0.00	0.55	2.41	N/A	0.55	2.41
1E	14-E	PE	Partial Enclosure	N/A	Conveyor from Conveyor 1D to Silos 6A & 6B	500	0.0 (1)	8760	0.0011	lb/ton	AP-42, Section 13.2.4,	0.5	0.00	0.00	0.55	2.41	N/A	0.55	2.41
1F	14-E	PE	Partial Enclosure	N/A	Conveyor from Silos 6A & 6B to Crushing Building	400	0.0 (1)	8760	0.0011	lb/ton	AP-42, Section 13.2.4,	0.5	0.00	0.00	0.44	1.93	N/A	0.44	1.93
CV-MH-1G	14-E	FE & BH-5C	Full Enclosure & Baghouse 5-C	N/A	Main Fuel Conveyor transefers fuel to Conveyors to 1H, 1J,& 1K (via 1H)	400	3000	8760	0.0011	lb/ton	AP-42, Section 13.2.4,	0.99	0.001	0.002	0.44	1.93	N/A	0.44	1.93
CV-MH-1H	14-E	FE	Full Enclosure	N/A	Conveyor from CV-MH-1G to Fuel Bunkers BN-MH-1A1, -1A2, 1B1, & -1B2	400	3000	8760	0.0011	lb/ton	AP-42, Section 13.2.4,	0.99	0.0007	0.001	0.44	1.93	N/A	0.44	1.93
CV-MH-1J	14-E	FE	Full Enclosure	N/A	Conveyor from CV-MH-1G to Fuel Bunkers BN-MH-1A1, -1A2, -1B1, & -1B2	400	3000	8760	0.0011	lb/ton	AP-42, Section 13.2.4,	0.99	0.0007	0.001	0.44	1.93	N/A	0.44	1.93
CV-MH-1K	14-E	FE	Full Enclosure	N/A	Conveyor from CV-MH-1G to Fuel Bunkers BN-MH-1A1, -1A2, -1B1, & -1B2	400	3000	8760	0.0011	lb/ton	AP-42, Section 13.2.4,	0.99	0.0007	0.001	0.44	1.93	N/A	0.44	1.93

Annual Emissions PM	0.00	0.01	4.40	19.27	-	4.40	19.27

NOTES:

(1) Emission unit is not currently in use.

Input data not listed in the table, but used in the emissions calculations is listed below:

Description	Value	Units	Comment
Percent H2O Coal	6.0	%	Value from 2008 Annual Emissions Spreadsheet
Mean Wind Speed	9.1	mph	Value from 2008 Annual Emissions Spreadsheet
Actual Throughput Rate of Coal	372,694	TPY	Value from 2008 Annual Emissions Spreadsheet

North Branch Power Station
Emission Calculations for: 15-E

Emission Unit ID	Emission Point ID	Pollution Contro Devicel ID	Pollution Control Device Description	Source ID #	Source Description	Full Load Throughput (TPY)	Typical Eq. Full Load Hours	Max. Hours	Emissio n Factor	Emission Factor Units	Emission Factor Source	Control Efficiency	Actual Emissions (lb/hr)	Actual Emissions (TPY)	Maximum Uncontrolled (lb/hr)	Maximum Uncontroll ed (TPY)	Permit Limit (lb/hr)	Potential Emissions (lb/hr)	Potential Emissions (TPY)
P-1	15-E	WS	Wet Spray	N/A	Storage Pile	5000	0	8760	0.0011	lb/ton	AP-42, Section 13.2.4,	0.99	0.000	0.00	0.0006	0.003	N/A	0.0006	0.003
Annual Emissions PM													0.00	0.00	0.001	0.003	-	0.001	0.003

NOTES:

(1) Storage pile is only used as emergency storage, therefore, actual throughput for this emission unit is zero.

Input data not listed in the table, but used in the emissions calculations is listed below:

Description	Value	Units	Comment
Percent H2O Coal	6.0	%	Value from 2008 Annual Emissions Spreadsheet
Mean Wind Speed	9.1	mph	Value from 2008 Annual Emissions Spreadsheet
Actual Throughput Rate of Coal	0.0 (1)	TPY	

North Branch Power Station
Emission Calculations for: 17-E

Emission Unit ID	Emission Point ID	Pollution Contro Devicel ID	Pollution Control Device Description	Source ID #	Source Description	Full Load Throughput (tph)	Typical Eq. Full Load Hours	Max. Hours	Emissio n Factor	Emission Factor Units	Emission Factor Source	Control Efficiency	Actual Emissions (lb/hr)	Actual Emissions (TPY)	Maximum Uncontrolled (lb/hr)	Maximum Uncontroll ed (TPY)	Permit Limit (lb/hr)	Potential Emissions (lb/hr)	Potential Emissions (TPY)
17-S	17-E	PE & WS	Partial Enclosue & Wet Spray	N/A	Truck Loading (Ash)	250	2970	8760	0.0005	lb/ton	AP-42, Section 13.2.4,	0.99	0.0013	0.002	0.125	0.55	N/A	0.125	0.55
												Annual Emissions PM	0.00	0.00	0.13	0.55	-	0.13	0.55

NOTES:

Input data not listed in the table, but used in the emissions calculations is listed below:

Description	Value	Units	Comment
Percent H2O Ash	10.0	%	Value from Annual Emissions Spreadsheet
Mean Wind Speed	9.1	mph	Value from Annual Emissions Spreadsheet
Actual Ash Throughput Rate	260,134	TPY	Value from 2008 Annual Emissions Spreadsheet

North Branch Power Station
Emission Calculations for: 20-E & Onan GenSet1&2

Emission Unit ID	Emission Point ID	Pollution Contro Devicel ID	Pollution Control Device Description	Source ID #	Source Description	Full Load Thruput (gph)	Typical Eq. Full Load Hours	Max. Hours	Emission Factor	Emission Factor Units	Emission Factor Source	Control Efficiency	Actual Emissions (lb/hr)	Actual Emissions (TPY)	Maximum Uncontrolled (lb/hr)	Maximum Uncontrolled (TPY)	Permit Limit (lb/hr)	Potential Emissions (lb/hr)	Potential Emissions (TPY)
EG-1	20-E	N/A	N/A	N/A	Emergency Diesel Fired Generator, CO	2	5	500	0.95	lb/MMBtu	AP-42 Ch 3.3 Table 3.3-1	N/A	2.66E-01	6.65E-04	2.66E-01	6.65E-02	N/A	0.266	0.067
EG-1	20-E	N/A	N/A	N/A	Emergency Diesel Fired Generator, NOx	2	5	500	4.41	lb/MMBtu	AP-42 Ch 3.3 Table 3.3-1	N/A	1.23E+00	3.09E-03	1.23E+00	3.09E-01	N/A	1.2348	0.309
EG-1	20-E	N/A	N/A	N/A	Emergency Diesel Fired Generator, Pb	2	5	500	0	-	-	N/A	0.00E+00	0.00E+00	0.00E+00	0.00E+00	N/A	0	0.000
EG-1	20-E	N/A	N/A	N/A	Emergency Diesel Fired Generator, PM	2	5	500	42.5	lb/kgal	FIRE	N/A	8.50E-02	2.13E-04	8.50E-02	2.13E-02	N/A	0.085	0.021
EG-1	20-E	N/A	N/A	N/A	Emergency Diesel Fired Generator, SO2	2	5	500	0.29	lb/MMBtu	AP-42 Ch 3.3 Table 3.3-1	N/A	8.12E-02	2.03E-04	8.12E-02	2.03E-02	N/A	0.0812	0.020
EG-1	20-E	N/A	N/A	N/A	Emergency Diesel Fired Generator, VOC	2	5	500	0.36	lb/MMBtu	AP-42 Ch 3.3 Table 3.3-1	N/A	1.01E-01	2.52E-04	1.01E-01	2.52E-02	N/A	0.1008	0.025
1-EG-GEN2	Onan GenSet 1	N/A	N/A	N/A	Emergency Propane Fired 85GGHG Onan Generator, CO	7.5	5	500	3.4	lb/kgal	AP-42 Ch 1.5 Table 1.5-1	N/A	2.55E-02	6.38E-05	2.55E-02	6.38E-03	15.6	15.6	3.900
1-EG-GEN2	Onan GenSet 1	N/A	N/A	N/A	Emergency Propane Fired 85GGHG Onan Generator, NOx	7.5	5	500	20	lb/kgal	AP-42 Ch 1.5 Table 1.5-1	N/A	1.50E-01	3.75E-04	1.50E-01	3.75E-02	4.2	4.2	1.050
1-EG-GEN2	Onan GenSet 1	N/A	N/A	N/A	Emergency Propane Fired 85GGHG Onan Generator, Pb	7.5	5	500	0	-	-	N/A	0.00E+00	0.00E+00	0.00E+00	0.00E+00	N/A	0	0.000
1-EG-GEN2	Onan GenSet 1	N/A	N/A	N/A	Emergency Propane Fired 85GGHG Onan Generator, PM	7.5	5	500	0.6	lb/kgal	FIRE	N/A	4.50E-03	1.13E-05	4.50E-03	1.13E-03	N/A	0.0045	0.001
1-EG-GEN2	Onan GenSet 1	N/A	N/A	N/A	Emergency Propane Fired 85GGHG Onan Generator, SO2	7.5	5	500	3.22E-02	lb/kgal	AP-42 Ch 1.5 Table 1.5-1	N/A	2.42E-04	6.04E-07	2.42E-04	6.04E-05	N/A	0.0002415	0.000
1-EG-GEN2	Onan GenSet 1	N/A	N/A	N/A	Emergency Propane Fired 85GGHG Onan Generator, VOC	7.5	5	500	0.5	lb/kgal	AP-42 Ch 1.5 Table 1.5-1	N/A	3.75E-03	9.38E-06	3.75E-03	9.38E-04	0.2	0.2	0.050
1-EG-GEN3	Onan GenSet 2	N/A	N/A	N/A	Emergency Propane Fired 85GGHG Onan Generator, CO	7.5	5	500	3.4	lb/kgal	AP-42 Ch 1.5 Table 1.5-1	N/A	2.55E-02	6.38E-05	2.55E-02	6.38E-03	15.6	15.6	3.900
1-EG-GEN3	Onan GenSet 2	N/A	N/A	N/A	Emergency Propane Fired 85GGHG Onan Generator, NOx	7.5	5	500	20	lb/kgal	AP-42 Ch 1.5 Table 1.5-1	N/A	1.50E-01	3.75E-04	1.50E-01	3.75E-02	4.2	4.2	1.050
1-EG-GEN3	Onan GenSet 2	N/A	N/A	N/A	Emergency Propane Fired 85GGHG Onan Generator, Pb	7.5	5	500	0	-	-	N/A	0.00E+00	0.00E+00	0.00E+00	0.00E+00	N/A	0	0.000
1-EG-GEN3	Onan GenSet 2	N/A	N/A	N/A	Emergency Propane Fired 85GGHG Onan Generator, PM	7.5	5	500	0.6	lb/kgal	FIRE	N/A	4.50E-03	1.13E-05	4.50E-03	1.13E-03	N/A	0.0045	0.001
1-EG-GEN3	Onan GenSet 2	N/A	N/A	N/A	Emergency Propane Fired 85GGHG Onan Generator, SO2	7.5	5	500	3.22E-02	lb/kgal	AP-42 Ch 1.5 Table 1.5-1	N/A	2.42E-04	6.04E-07	2.42E-04	6.04E-05	N/A	0.0002415	0.000
1-EG-GEN3	Onan GenSet 2	N/A	N/A	N/A	Emergency Propane Fired 85GGHG Onan Generator, VOC	7.5	5	500	0.5	lb/kgal	AP-42 Ch 1.5 Table 1.5-1	N/A	3.75E-03	9.38E-06	3.75E-03	9.38E-04	0.2	0.2	0.050

North Branch Power Station
Emission Calculations for: 21-E

Emission Unit ID	Emission Point ID	Pollution Contro Devicel ID	Pollution Control Device Description	Source ID #	Source Description	Full Load Thruput (gph)	Typical Eq. Full Load Hours	Max. Hours	Emission Factor	Emission Factor Units	Emission Factor Source	Control Efficiency	Actual Emissions (lb/hr)	Actual Emissions (TPY)	Maximum Uncontrolled (lb/hr)	Maximum Uncontrolled (TPY)	Permit Limit (lb/hr)	Potential Emissions (lb/hr)	Potential Emissisions (TPY)
P-FP-2	21-E	N/A	N/A	N/A	Diesel Fired Fire Pump, CO	3	5	500	0.95	lb/MMBtu	AP-42 Ch 3.3 Table 3.3-1	N/A	3.99E-01	9.98E-04	3.99E-01	9.98E-02	N/A	0.399	0.100
P-FP-2	21-E	N/A	N/A	N/A	Diesel Fired Fire Pump, NOx	3	5	500	4.41	lb/MMBtu	AP-42 Ch 3.3 Table 3.3-1	N/A	1.85E+00	4.63E-03	1.85E+00	4.63E-01	N/A	1.8522	0.463
P-FP-2	21-E	N/A	N/A	N/A	Diesel Fired Fire Pump, Pb	3	5	500	0	-	-	N/A	0.00E+00	0.00E+00	0.00E+00	0.00E+00	N/A	0	0.000
P-FP-2	21-E	N/A	N/A	N/A	Diesel Fired Fire Pump, PM	3	5	500	42.5	lb/kgal	FIRE	N/A	1.28E-01	3.19E-04	1.28E-01	3.19E-02	N/A	0.1275	0.032
P-FP-2	21-E	N/A	N/A	N/A	Diesel Fired Fire Pump, SO2	3	5	500	0.29	lb/MMBtu	AP-42 Ch 3.3 Table 3.3-1	N/A	1.22E-01	3.05E-04	1.22E-01	3.05E-02	N/A	0.1218	0.030
P-FP-2	21-E	N/A	N/A	N/A	Diesel Fired Fire Pump, VOC	3	5	500	0.36	lb/MMBtu	AP-42 Ch 3.3 Table 3.3-1	N/A	1.51E-01	3.78E-04	1.51E-01	3.78E-02	N/A	0.1512	0.038

North Branch Power Station
Emission Calculations for: 22-E

Emission Unit ID	Emission Point ID	Pollution Contro Devicel ID	Pollution Control Device Description	Source ID #	Source Description	Full Load Thruput (gph)	Typical Eq. Full Load Hours	Max. Hours	Emission Factor	Emission Factor Units	Emission Factor Source	Control Efficiency	Actual Emissions (lb/hr)	Actual Emissions (TPY)	Maximum Uncontrolled (lb/hr)	Maximum Uncontroll ed (TPY)	Permit Limit (lb/hr)	Potential Emissions (lb/hr)	Potential Emissisions (TPY)
ME-CA-1	22-E	N/A	N/A	N/A	Diesel Fired Air Compressor, CO	5	40	500	0.95	lb/MMBtu	AP-42 Ch 3.3 Table 3.3-1	N/A	6.65E-01	1.33E-02	6.65E-01	0.166	N/A	0.665	0.166
ME-CA-1	22-E	N/A	N/A	N/A	Diesel Fired Air Compressor, NOx	5	40	500	4.41	lb/MMBtu	AP-42 Ch 3.3 Table 3.3-1	N/A	3.09E+00	6.17E-02	3.09E+00	0.772	N/A	3.087	0.772
ME-CA-1	22-E	N/A	N/A	N/A	Diesel Fired Air Compressor, Pb	5	40	500	0	-	-	N/A	0.00	0.00	0.00	0.00	N/A	0.00	0.00
ME-CA-1	22-E	N/A	N/A	N/A	Diesel Fired Air Compressor, PM	5	40	500	42.5	lb/kgal	FIRE	N/A	2.13E-01	4.25E-03	2.13E-01	0.053	N/A	0.2125	0.053
ME-CA-1	22-E	N/A	N/A	N/A	Diesel Fired Air Compressor, SO2	5	40	500	0.29	lb/MMBtu	AP-42 Ch 3.3 Table 3.3-1	N/A	2.03E-01	4.06E-03	2.03E-01	0.051	N/A	0.203	0.051
ME-CA-1	22-E	N/A	N/A	N/A	Diesel Fired Air Compressor, VOC	5	40	500	0.36	lb/MMBtu	AP-42 Ch 3.3 Table 3.3-1	N/A	2.52E-01	5.04E-03	2.52E-01	0.063	N/A	0.252	0.063

North Branch Power Station
Emission Calculations for: 23-E

Emission Unit ID	Emission Point ID	Pollution Contro Devicel ID	Pollution Control Device Description	Source ID #	Source Description	Full Load Thruput (gph)	Typical Eq. Full Load Hours	Max. Hours	Emission Factor	Emission Factor Units	Emission Factor Source	Control Efficiency	Actual Emissions (lb/hr)	Actual Emissions (TPY)	Maximum Uncontrolled (lb/hr)	Maximum Uncontrolled (TPY)	Permit Limit (lb/hr)	Potential Emissions (lb/hr)	Potential Emissisions (TPY)
PK-PR-1	23-E	N/A	N/A	N/A	Propane Vaporizor, CO	58.82	8760	8760	7.5	lb/kgal	AP-42 Table 1.5-1	N/A	0.44	0.24	0.44	1.93	N/A	0.44	1.93
PK-PR-1	23-E	N/A	N/A	N/A	Propane Vaporizor, NOx	58.82	8760	8760	13	lb/kgal	AP-42 Table 1.5-1	N/A	0.76	0.41	0.76	3.35	N/A	0.76	3.35
PK-PR-1	23-E	N/A	N/A	N/A	Propane Vaporizor, Pb	58.82	8760	8760	0	-	-	N/A	0.00	0.00	0.00	0.00	N/A	0.00	0.00
PK-PR-1	23-E	N/A	N/A	N/A	Propane Vaporizor, PM	58.82	8760	8760	1.106	lb/kgal	FIRE	N/A	0.07	0.04	0.07	0.28	N/A	0.07	0.28
PK-PR-1	23-E	N/A	N/A	N/A	Propane Vaporizor, SO2	58.82	8760	8760	0.0322	lb/kgal	AP-42 Table 1.5-1	N/A	0.002	0.001	0.002	0.01	N/A	0.002	0.01
PK-PR-1	23-E	N/A	N/A	N/A	Propane Vaporizor, VOC	58.82	8760	8760	0.459	lb/kgal	FIRE	N/A	0.03	0.01	0.03	0.12	N/A	0.03	0.12

Input data not listed in the table, but used in the emissions calculations is listed below:

Description	Value	Units	Comment
Unit Capacity	5.4	MMBtu/hr	
Heating Value of Propane	91,800	Btu/gal	Lower Heating Value
Full load throughput of Propane	58.82	gal/hr	Calculated based on Uniot Capacity and Heating Value of Propane
Standby load throughput of Propane	5.88	gal/hr	Assumed to be 10% of full load
Sulfur Content of Propane	0.322	gr/100cf	Value from Annual Emissions Spreadsheet
Full Load Hours of Operation Propane	228	hr/yr	Based on 2008 data, prorated by MMBtu

North Branch Power Station
Emission Calculations for: 24-E - 35-E

Emission Unit ID	Emission Point ID	Pollution Contro Devicel ID	Pollution Control Device Description	Source ID #	Source Description	Full Load Thruput (tph)	Typical Eq. Full Load Hours	Max. Hours	Percent H_2O	Emission Factor (lb/ton)	Control Efficiency	Actual Emissions (tpy)	Group Actual Emissions (tpy)	Max. Uncontrolled Emissions (lb/hr)	Uncontrolled Group Max. Total (lb/hr)	Percent of Goup Total	Permit Limit (lb/hr)	Calculated Controlled Source Emissions (lb/hr)
T-MH-4	24-E	N/A	N/A	NA	Freeze control agent (diethylene glycol) tank		8760	8760										
T-MH-1	25-E	N/A	N/A	NA	Diesel Tank		8760	8760										
T-DS-2	26-E	N/A	N/A	NA	Diesel Tank		8760	8760										
T-PT-3	27-E	N/A	N/A	NA	Diesel Tank		8760	8760										
T-EG-1	28-E	N/A	N/A	NA	Diesel Tank (Emergancy Generator)		8760	8760										
T-MH-3	29-E	N/A	N/A	NA	Kerosene Tank		8760	8760										
T-MH-5	30-E	N/A	N/A	NA	Kerosene Tank (not in service)		8760	8760										
T-PT-1	31-E	N/A	N/A	NA	Kerosene Tank		8760	8760										
T-PT-2	32-E	N/A	N/A	NA	Kerosene Tank		8760	8760										
T-MH-2	33-E	N/A	N/A	NA	Gasoline Tank		8760	8760										
T-LO-3	34-E	N/A	N/A	NA	Turbine Lube Oil Tank		8760	8760										
T-LO-1	35-E	N/A	N/A	NA	Turbine Lube Oil Tank		8760	8760										

North Branch Power Station
Emission Calculations for: 36-E - 41-E

Emission Unit ID	Emission Point ID	Pollution Contro Devicel ID	Pollution Control Device Description	Source ID #	Source Description	Full Load Thruput (tph)	Typical Eq. Full Load Hours	Max. Hours	Percent H_2O	Emission Factor (lb/ton)	Control Efficiency	Actual Emissions (tpy)	Group Actual Emissions (tpy)	Max. Uncontrolled Emissions (lb/hr)	Uncontrolled Group Max. Total (lb/hr)	Percent of Goup Total	Permit Limit (lb/hr)	Calculated Controlled Source Emissions (lb/hr)
T-PR-1	36-E	N/A	N/A	NA	Propane Tank		8760	8760										
T-PR-2	37-E	N/A	N/A	NA	Propane Tank		8760	8760										
T-PR-3	38-E	N/A	N/A	NA	Propane Tank		8760	8760										
T-PR-4	39-E	N/A	N/A	NA	Propane Tank		8760	8760										
T-PR-5	40-E	N/A	N/A	NA	Propane Tank		8760	8760										
T-PR-6	41-E	N/A	N/A	NA	Propane Tank		8760	8760										

North Branch Power Station
Emission Calculations for: Fugitive-FuelHandling

Emission Unit ID	Emission Point ID	Pollution Contro Devicel ID	Pollution Control Device Description	Source ID #	Source Description	Full Load Throughput (tph)	Typical Eq. Full Load Hours	Max. Hours	Emissio n Factor	Emission Factor Units	Emission Factor Source	Control Efficiency	Actual Emissions (lb/hr)	Actual Emissions (TPY)	Maximum Uncontrolled (lb/hr)	Maximum Uncontroll ed (TPY)	Permit Limit (lb/hr)	Potential Emissions (lb/hr)	Potential Emissions (TPY)
CP-1	Fugitive	PE	Partial Enclosure	N/A	Conveyor from Fuel Hopper to Conveyors CP-2, CP-3, & CP-4	500	(1)	8760	0.0011	lb/ton	AP-42, Section 13.2.4,	0.5	0.00	0.00	0.55	2.41	N/A	0.55	2.41
CP-2	Fugitive	PE	Partial Enclosure	N/A	Conveyors from CP-1 to P1	500	(1)	8760	0.0011	lb/ton	AP-42, Section 13.2.4,	0.5	0.00	0.00	0.55	2.41	N/A	0.55	2.41
CP-3	Fugitive	PE	Partial Enclosure	N/A	Conveyors from CP-1 to P1	500	(1)	8760	0.0011	lb/ton	AP-42, Section 13.2.4,	0.5	0.00	0.00	0.55	2.41	N/A	0.55	2.41
CP-4	Fugitive	PE	Partial Enclosure	N/A	Conveyors from CP-1 to P1	500	(1)	8760	0.0011	lb/ton	AP-42, Section 13.2.4,	0.5	0.00	0.00	0.55	2.41	N/A	0.55	2.41
											Annual Emissions PM		0.00	0.00	2.20	9.64	-	2.20	9.64

NOTES:

(1) Conveyor used in association with fuel storage pile which is only used as emergency storage, therefore, actual throughput for this emission unit is zero.

Input data not listed in the table, but used in the emissions calculations is listed below:

Description	Value	Units	Comment
Percent H2O Coal	6.0	%	Value from 2008 Annual Emissions Spreadsheet
Mean Wind Speed	9.1	mph	Value from 2008 Annual Emissions Spreadsheet
Actual Throughput Rate of Coal	0	TPY	Value from 2008 Annual Emissions Spreadsheet

North Branch Power Station
Emission Calculations for: Fugitive-Limestone&FuelHandling

Emission Unit ID	Emission Point ID	Pollution Contro Devicel ID	Pollution Control Device Description	Source ID #	Source Description	Full Load Throughput (tph)	Typical Eq. Full Load Hours	Max. Hours	Emissio n Factor	Emission Factor Units	Emission Factor Source	Control Efficiency	Actual Emissions (lb/hr)	Actual Emissions (TPY)	Maximum Uncontrolled (lb/hr)	Maximum Uncontroll ed (TPY)	Permit Limit (lb/hr)	Potential Emissions (lb/hr)	Potential Emissions (TPY)
CV-LH-1M	Fugitive	FE	Full Enclosure	N/A	Conveyor from Limestone and Fuel Hoppers to Crusher Building (Fuel)	200	2,364	8760	0.0011	lb/ton	AP-42, Section 13.2.4, Equation 1	0.99	0.002	0.002	0.22	0.96	N/A	0.22	0.96
CV-LH-1M	Fugitive	FE	Full Enclosure	N/A	Conveyor from Limestone and Fuel Hoppers to Crusher Building (Limestone)	200	606	8760	0.0052	lb/ton	AP-42, Section 13.2.4, Equation 1	0.99	0.01	0.003	1.04	4.56	N/A	1.04	4.56
CR-LH-1A	Fugitive (vents inside)	FE, BH-5C	Full Enclosure & Baghouse 5C	N/A	Limestone Impactor 1	200	606	8760	0.0052	lb/ton	AP-42, Section 13.2.4, Equation 1	0.99	0.01	0.003	1.04	4.56	N/A	1.04	4.56
CV-LH-1N	Fugitive	FE	Full Enclosure	N/A	Conveyor from Crusher Building to Uncrushed Limestone Storage Bin (Fuel)	200	2,364	8760	0.0011	lb/ton	AP-42, Section 13.2.4, Equation 1	0.99	0.002	0.002	0.22	0.96	N/A	0.22	0.96
CV-LH-1N	Fugitive	FE	Full Enclosure	N/A	Conveyor from Crusher Building to Uncrushed Limestone Storage Bin (Limestone)	200	606	8760	0.0052	lb/ton	AP-42, Section 13.2.4, Equation 1	0.99	0.01	0.003	1.04	4.56	N/A	1.04	4.56
CR-LH-2A1	Fugitive (vents inside)	FE	Full Enclosure	N/A	Limestone Direct Fired Mill	50	606	8760	0.0052	lb/ton	AP-42, Section 13.2.4, Equation 1	0.99	0.01	0.003	0.26	1.14	N/A	0.26	1.14
											Annual Emissions PM		0.05	0.02	3.82	16.73	-	3.82	16.73

NOTES:

Input data not listed in the table, but used in the emissions calculations is listed below:

Description	Value	Units	Comment
Percent H2O Coal	6.0	%	Value from 2008 Annual Emissions Spreadsheet
Mean Wind Speed	9.1	mph	Value from 2008 Annual Emissions Spreadsheet
Actual Throughput Rate of Coal	372,694	TPY	Value from 2008 Annual Emissions Spreadsheet
Actual Limestone Throughput Rate	121,205	TPY	Value from 2008 Annual Emissions Spreadsheet
ırs of Operation Limestone Delivered	606	hr/yr	Based on 2008 data.
Hours of Operation Coal Delivered	2,364	hr/yr	Based on 2008 data.

North Branch Power Station
Emission Calculations for: Fugitive-RoadDust

Emission Unit ID	Emission Point ID	Pollution Contro Devicel ID	Pollution Control Device Description	Source ID #	Source Description	Maximum VMT (VMT/yr)	Typical Eq. Full Load Hours	Max. Hours	Emission Factor	Emission Factor Units	Emission Factor Source	Control Efficiency	Actual Emissions (lb/hr)	Actual Emissions (TPY)	Maximum Uncontrolled (lb/hr)	Maximum Uncontroll ed (TPY)	Permit Limit (lb/hr)	Potential Emissions (lb/hr)	Potential Emissions (TPY)
17-S	Fugitive	WS	Wet Spray	Gob Trucks	Upaved Roads - Gob Trucks	6,755	2,970	8760	4.49	lb/VMT	AP-42, Section 13.2.2, Equation 1b	0.9	0.79	1.18	3.46	15.17	N/A	3.46	15.17
17-S	Fugitive	WS	Wet Spray	Ash Trucks	Upaved Roads - Ash Trucks	28,223	2,970	8760	4.49	lb/VMT	AP-42, Section 13.2.2, Equation 1b	0.9	1.29	1.91	14.47	63.36	N/A	14.47	63.36
17-S	Fugitive	WS	Wet Spray	Limestone Trucks	Upaved Roads - Limestone Trucks	2,197	606	8760	4.49	lb/VMT	AP-42, Section 13.2.2, Equation 1b	0.9	1.44	0.44	1.13	4.93	N/A	1.13	4.93
17-S	Fugitive	WS	Wet Spray	Limestone Trucks	Paved Roads - Gob Trucks	2,598	2,970	8760	15.26	lb/VMT	AP-42, Section 13.2.1, Equation 1	0.9	1.57	2.33	4.53	19.82	N/A	4.53	19.82
17-S	Fugitive	WS	Wet Spray	Limestone Trucks	Paved Roads - Ash Trucks	6,773	2,970	8760	12.42	lb/VMT	AP-42, Section 13.2.1, Equation 1	0.9	0.86	1.27	9.60	42.06	N/A	9.60	42.06
17-S	Fugitive	WS	Wet Spray	Limestone Trucks	Paved Roads - Limestone Trucks	845	606	8760	13.3	lb/VMT	AP-42, Section 13.2.1, Equation 1	0.9	1.64	0.50	1.28	5.62	N/A	1.28	5.62
											Annual Emissions PM		7.58	7.63	34.47	150.96	-	34.47	150.96

NOTES:

Input data not listed in the table, but used in the emissions calculations is listed below:

Description	Value	Units	Comment
Silt Content	8.4	%	Value from 2008 Annual Emissions Spreadsheet
Vehicle Speed	15.0	mph	Value from 2008 Annual Emissions Spreadsheet
Surface Mositure	0	%	Value from 2008 Annual Emissions Spreadsheet
Surface Silt Loading	9.7	g/m^3	Value from 2008 Annual Emissions Spreadsheet
Gob Truck Wieght	49.39	tons	Value from 2008 Annual Emissions Spreadsheet
Ash Truck Wieght	43.00	tons	Value from 2008 Annual Emissions Spreadsheet
Limestone Truck Wieght	45.00	tons	Value from 2008 Annual Emissions Spreadsheet
Gob Truck Actaul Upaved Distance	5,254	VMT/yr	Value from 2008 Annual Emissions Spreadsheet
AshTruck Actaul Upaved Distance	8,529	VMT/yr	Value from 2008 Annual Emissions Spreadsheet
Limestone Truck Actaul Upaved Distance	1,939	VMT/yr	Value from 2008 Annual Emissions Spreadsheet
Gob Truck Actaul Paved Distance	3056	VMT/yr	Value from 2008 Annual Emissions Spreadsheet
AshTruck Actaul Paved Distance	2047	VMT/yr	Value from 2008 Annual Emissions Spreadsheet
Limestone Truck Actaul Paved Distance	746	VMT/yr	Value from 2008 Annual Emissions Spreadsheet