TITLE V
RENEWAL APPLICATION
PERMIT NUMBER
R30-05300004-2007

Felman Production, Inc.
New Haven Facility
Mason County, West Virginia

Prepared for:

Felman Production, Inc.
4442 Graham Station Road
Letart, West Virginia 25253-8701

Prepared by:

Potesta & Associates, Inc.
7012 MacCorkle Avenue, SE
Charleston, West Virginia 25304
Phone: (304) 342-1400 Fax: (304) 343-9031
Email: potesta@potesta.com

Project No. 0101-11-0444

February 2012

POTESTA

TABLE OF CONTENTS

Title V Permit Application General Forms.....SECTION I-VI

Area Map ..... ATTACHMENT A

Plot Plans ..... ATTACHMENT B

Process Flow Diagrams..... ATTACHMENT C

Equipment Table..... ATTACHMENT D

Emission Unit Forms .....ATTACHMENT E

Schedule of Compliance Forms.....ATTACHMENT F

Air Pollution Control Device Forms..... ATTACHMENT G

Compliance Assurance Monitoring (CAM) Forms ..... ATTACHMENT H

SECTION I-VI

TITLE V PERMIT APPLICATION GENERAL FORMS

WEST VIRGINIA DEPARTMENT OF ENVIRONMENTAL PROTECTION
DIVISION OF AIR QUALITY

601 57th Street SE
Charleston, WV 25304
Phone: (304) 926-0475
www.dep.wv.gov/daq

INITIAL/RENEWAL TITLE V PERMIT APPLICATION - GENERAL FORMS

Section 1: General Information

1. Name of Applicant (As registered with the WV Secretary of State's Office):
Felman Production, Inc.

2. Facility Name or Location:
New Haven

3. DAQ Plant ID No.:
0 5 3 — 0 0 0 0 4

4. Federal Employer ID No. (FEIN):
0 2 0 7 6 1 8 4 9

5. Permit Application Type:

- ☐ Initial Permit — When did operations commence? Restart 09/01/2006
- ☒ Permit Renewal — What is the expiration date of the existing permit? 08/08/2012
- ☐ Update to Initial/Renewal Permit Application

6. Type of Business Entity:

☒ Corporation ☐ Governmental Agency ☐ LLC
☐ Partnership ☐ Limited Partnership

7. Is the Applicant the:

☐ Owner ☐ Operator ☒ Both

If the Applicant is not both the owner and operator, please provide the name and address of the other party.

_____
_____
_____

8. Number of onsite employees:
240

9. Governmental Code:

- ☒ Privately owned and operated; 0
- ☐ Federally owned and operated; 1
- ☐ State government owned and operated; 2
- ☐ County government owned and operated; 3
- ☐ Municipality government owned and operated; 4
- ☐ District government owned and operated; 5

10. Business Confidentiality Claims

Does this application include confidential information (per 45CSR31)? ☐ Yes ☒ No

If yes, identify each segment of information on each page that is submitted as confidential, and provide justification for each segment claimed confidential, including the criteria under 45CSR§31-4.1, and in accordance with the DAQ's *"PRECAUTIONARY NOTICE-CLAIMS OF CONFIDENTIALITY"* guidance.

11. Mailing Address		
Street or P.O. Box: 4442 Graham Station Road		
City: Letart	**State:** WV	**Zip:** 25253-8701
Telephone Number: (304) 882-1181	**Fax Number:** (304) 882-1187	

12. Facility Location		
Street: US Route 62 North	**City:** New Haven	**County:** Mason
UTM Easting: 419.73 km	**UTM Northing:** 4,312.468 km	**Zone:** ☒ 17 or ☐ 18
Directions: Approximately 4 miles east of New Haven adjacent to US Route 62.		
Portable Source? ☐ Yes ☒ No		
Is facility located within a nonattainment area? ☒ Yes ☐ No		**If yes, for what air pollutants?** PM2.5
Is facility located within 50 miles of another state? ☒ Yes ☐ No		**If yes, name the affected state(s).** Ohio Kentucky
Is facility located within 100 km of a Class I Area[1]? ☐ Yes ☒ No **If no, do emissions impact a Class I Area[1]?** ☐ Yes ☒ No		**If yes, name the area(s).**

[1] *Class I areas include Dolly Sods and Otter Creek Wilderness Areas in West Virginia, and Shenandoah National Park and James River Face Wilderness Area in Virginia.*

13. Contact Information		
Responsible Official: John Konrady		**Title:** Plant Manager
Street or P.O. Box: 4442 Graham Station Road		
City: Letart	**State:** WV	**Zip:** 25253-8701
Telephone Number: (304) 882-1401	**Fax Number:** (304) 882-3853	
E-mail address: jskonrady@fpiwv.com		
Environmental Contact: Richard Lunn		**Title:** EHS Manager
Street or P.O. Box: 4442 Graham Station Road		
City: Letart	**State:** WV	**Zip:** 25253-8701
Telephone Number: (304) 882-1413	**Fax Number:** (304) 882-3853	
E-mail address: rlunn@fpiwv.com		
Application Preparer: Patrick Ward		**Title:** Senior Engineer
Company: Potesta & Associates, Inc.		
Street or P.O. Box: 7012 MacCorkle Avenue, SE		
City: Charleston	**State:** WV	**Zip:** 25304
Telephone Number: (304) 342-1400	**Fax Number:** (304) 343-9031	
E-mail address: peward@potesta.com		

14. Facility Description

List all processes, products, NAICS and SIC codes for normal operation, in order of priority. Also list any process, products, NAICS and SIC codes associated with any alternative operating scenarios if different from those listed for normal operation.

Process	Products	NAICS	SIC
Primary Metal Industries	Electrometallurgical Products	331112	3313
Primary Metal Industries	Secondary Nonferrous Metals	331492	3341

Provide a general description of operations.

Manufacturing of manganese and silicon based ferroalloys.

15. Provide an **Area Map** showing plant location as **ATTACHMENT A**.

16. Provide a **Plot Plan(s)**, e.g. scaled map(s) and/or sketch(es) showing the location of the property on which the stationary source(s) is located as **ATTACHMENT B**. For instructions, refer to "Plot Plan - Guidelines."

17. Provide a detailed **Process Flow Diagram(s)** showing each process or emissions unit as **ATTACHMENT C**. Process Flow Diagrams should show all emission units, control equipment, emission points, and their relationships.

Section 2: Applicable Requirements

18. Applicable Requirements Summary	
Instructions: Mark all applicable requirements.	
☒ SIP	☐ FIP
☒ Minor source NSR (45CSR13)	☐ PSD (45CSR14)
☒ NESHAP (45CSR15)	☒ Nonattainment NSR (45CSR19)
☒ Section 111 NSPS	☒ Section 112(d) MACT standards
☐ Section 112(g) Case-by-case MACT	☐ 112(r) RMP
☐ Section 112(i) Early reduction of HAP	☐ Consumer/commercial prod. reqts., section 183(e)
☐ Section 129 Standards/Reqts.	☐ Stratospheric ozone (Title VI)
☐ Tank vessel reqt., section 183(f)	☒ Emissions cap 45CSR§30-2.6.1
☐ NAAQS, increments or visibility (temp. sources)	☐ 45CSR27 State enforceable only rule
☒ 45CSR4 State enforceable only rule	☐ Acid Rain (Title IV, 45CSR33)
☐ Emissions Trading and Banking (45CSR28)	☒ Compliance Assurance Monitoring (40CFR64)
☐ CAIR NO_x Annual Trading Program (45CSR39)	☐ CAIR NO_x Ozone Season Trading Program (45CSR40)
☐ CAIR SO_2 Trading Program (45CSR41)	

19. Non Applicability Determinations

List all requirements which the source has determined not applicable and for which a permit shield is requested. The listing shall also include the rule citation and the reason why the shield applies.

40 CFR Part 60, subpart K, Ka, and Kb – The facility has three above ground storage tanks with capacities less than 19,813 gallons.

40 CFR Part 60, Subpart Z – Electric Arc Furnaces No. 2 and No. 5, were installed in 1966, and in January, 1974, respectively. Electric Arc Furnace No. 7 commenced construction in March 1974 when the owner or operator entered into contractual obligations.

40 CFR 64 – Compliance Assurance Monitoring (CAM). The Electric Arc Furnaces are subject to SO_2 limits in accordance with 45 CSR10, however there are no control devices used to comply with the limit, thus the Furnaces are not pollutant specific emissions units (PSEUs) for SO_2 in accordance with 40 CFR§64.2(a)(2). The Electric Arc Furnaces, the crushing and screening equipment, and fugitive dust sources are subject to the Ferroalloys Production MACT which regulates PM emissions, therefore these sources are not subject to CAM for PM in accordance with 40 CFR§64.2(b)(1)(i).

☒ Permit Shield

19. Non Applicability Determinations *(Continued)* *- Attach additional pages as necessary.*

List all requirements which the source has determined not applicable and for which a permit shield is requested. The listing shall also include the rule citation and the reason why the shield applies.

☒ Permit Shield

20. Facility-Wide Applicable Requirements

List all facility-wide applicable requirements. For each applicable requirement, include the underlying rule/regulation citation and/or construction permit with the condition number. (*Note: Title V permit condition numbers alone are not the underlying applicable requirements*).

See Pages 9 – 21

☒ Permit Shield

For all facility-wide applicable requirements listed above, provide monitoring/testing / recordkeeping / reporting which shall be used to demonstrate compliance. If the method is based on a permit or rule, include the condition number and/or citation. (Note: Each requirement listed above must have an associated method of demonstrating compliance. If there is not already a required method in place, then a method must be proposed.)

See Pages 22 - 25

Are you in compliance with all facility-wide applicable requirements? ☒ Yes ☐ No

If no, complete the **Schedule of Compliance Form** as **ATTACHMENT F**.

20. Facility-Wide Applicable Requirements *(Continued)* - *Attach additional pages as necessary.*

List all facility-wide applicable requirements. For each applicable requirement, include the rule citation and/or permit with the condition number.

See Pages 9 - 21

☒ Permit Shield

For all facility-wide applicable requirements listed above, provide monitoring/testing/recordkeeping/ reporting which shall be used to demonstrate compliance. If the method is based on a permit or rule, include the condition number and/or citation. (Note: Each requirement listed above must have an associated method of demonstrating compliance. If there is not already a required method in place, then a method must be proposed.)

See Pages 22 - 25

Are you in compliance with all facility-wide applicable requirements? ☒ Yes ☐ No

If no, complete the **Schedule of Compliance Form** as **ATTACHMENT F**.

20. Facility-Wide Applicable Requirements

List all facility-wide applicable requirements. For each applicable requirement, include the underlying rule/regulation citation and/or construction permit with the condition number. (*Note: Title V permit condition numbers alone are not the underlying applicable requirements*).

	Rule/ Regulation/ R13 Permit	Existing R30 Permit Condition	Name	Requirement
1	CO-R7-95-13, Condition 7.a.11.A and 45CSR§6-3.1.	3.1.1.	Open burning	The permittee shall prohibit and prevent open burning of refuse. A written policy prohibiting any and all open burning of refuse at the facility shall be posted in the facility and provided to all employees. Such policy shall be presented and included in any safety programs developed by the company. Compliance with this limit shall demonstrate compliance with the less stringent limitation of 45CSR§6-3.1.
2	40 C.F.R. 61 and 45CSR15	3.1.2.	Asbestos	The permittee is responsible for thoroughly inspecting the facility, or part of the facility, prior to commencement of demolition or renovation for the presence of asbestos and complying with 40 C.F.R. § 61.145, 40 C.F.R. § 61.148, and 40 C.F.R. § 61.150. The permittee must notify the Secretary at least ten (10) working days prior to the commencement of any asbestos removal on the forms prescribed by the Secretary if the permittee is subject to the notification requirements of 40 C.F.R. § 61.145(b)(3)(i). A copy of this notice is required to be sent to the USEPA, the Division of Waste Management and the Bureau for Public Health -Environmental Health.
3	45CSR§4-3.1 State-Enforceable only	3.1.3.	Odor	No person shall cause, suffer, allow or permit the discharge of air pollutants which cause or contribute to an objectionable odor at any location occupied by the public.
4	45CSR§11-5.2	3.1.4.	Standby plan for reducing emissions	When requested by the Secretary, the permittee shall prepare standby plans for reducing the emissions of air pollutants in accordance with the objectives set forth in Tables I, II, and III of 45CSR11.
5	W.Va. Code § 22-5-4(a)(14)	3.1.5.	Emission inventory	The permittee is responsible for submitting, on an annual basis, an emission inventory in accordance with the submittal requirements of the Division of Air Quality.
6	40 C.F.R. 82, Subpart F	3.1.6.	Ozone-depleting substances	For those facilities performing maintenance, service, repair or disposal of appliances, the permittee shall comply with the standards for recycling and emissions reduction pursuant to 40C.F.R. Part 82, Subpart F, except as provided for Motor Vehicle Air Conditioners (MVACs) in Subpart B: a. Persons opening appliances for maintenance, service, repair, or disposal must comply with the prohibitions and required practices pursuant to 40 C.F.R. §§ 82.154 and 82.156. b. Equipment used during the maintenance, service, repair, or disposal of appliances must comply with the standards for recycling and recovery equipment pursuant to 40 C.F.R. § 82.158. c. Persons performing maintenance, service, repair, or disposal of appliances must be certified by an approved technician certification program pursuant to 40 C.F.R. § 82.161.
7	40 C.F.R. 68	3.1.7.	Risk Management Plan	Should this stationary source, as defined in 40 C.F.R. § 68.3, become subject to Part 68, then the owner or operator shall submit a risk management plan (RMP) by the date specified in 40 C.F.R. § 68.10 and shall certify compliance with the requirements of Part 68 as part of the annual compliance certification as required by 40 C.F.R. Part 70 or 71.
8	45CSR§7-5.1. and 45CSR13, R13-2857, Condition 4.1.15.	3.1.8.	Fugitive Particulate Matter	No person shall cause, suffer, allow or permit any manufacturing process or storage structure generating fugitive particulate matter to operate that is not equipped with a system, which may include, but not be limited to, process equipment design, control equipment design or operation and maintenance procedures, to minimize the emissions of fugitive particulate matter. To minimize means such system shall be installed, maintained and operated to ensure the lowest fugitive particulate matter emissions reasonably achievable.

20. Facility-Wide Applicable Requirements

List all facility-wide applicable requirements. For each applicable requirement, include the underlying rule/regulation citation and/or construction permit with the condition number. (*Note: Title V permit condition numbers alone are not the underlying applicable requirements*).

	Rule/ Regulation/ R13 Permit	Existing R30 Permit Condition	Name	Requirement
9	45CSR§7-5.2.	3.1.9.	Particulate Matter Control	The owner or operator of a plant shall maintain particulate matter control of the plant premises, and plant owned, leased or controlled access roads, by paving, application of asphalt, chemical dust suppressants or other suitable dust control measures. Good operating practices shall be implemented and when necessary particulate matter suppressants shall be applied in relation to stockpiling and general material handling to minimize particulate matter generation and atmospheric entrainment.
10	CO-R7-95-13, Condition 7.a.11.C.	3.1.10.	Pressurized Particulate Suppressant Spray Truck	The permittee shall maintain on site and operate a pressurized particulate suppressant spray truck, as often as necessary, to minimize fugitive emissions from plant access roads, lots, or access areas.
11	CO-R7-95-13, Condition 7.a.12.	3.1.11.	Implementation of a Preventative Maintenance Program	a. The permittee shall maintain a computerized spare parts inventory tracking system for inventory, purchases, suppliers and availability of all components and materials necessary for operation of all emission control systems at the facility and the permittee's air pollution control spare parts inventory shall be updated monthly; b. The permittee shall use its best efforts to maintain availability of all components and materials identified in the permittee's air pollution control spare parts inventory as being prone to failure or otherwise requiring frequent replacement and shall provide monthly reports to the Secretary; c. The permittee shall take all steps necessary to implement the requirements of Sections 3.1.10. through 3.1.13., and 5.1.4. through 5.1.7. of this permit, including the air pollution control spare parts inventory and the Inspection and Maintenance Program submitted by the permittee as Appendix A of Consent Order agreement of April 16, 1993, a copy of which is attached hereto as Appendix A.
12	CO-R7-95-13, Condition 7.a.13.	3.1.12.	General Operating Provision	The permittee shall implement all measures necessary, including, but not limited to reducing furnace power input levels and stoking of furnaces, to abate or minimize, to the greatest extent practicable any fugitive or process emissions released or emitted as the result of the complete failure of the air pollution control equipment serving a source of fugitive or process emissions. This provision applies following the failure of any air pollution control equipment, and, such measures shall include the cessation of material tapping, crushing, sizing, or any other manufacturing, processing, or handling, to the extent emissions from such manufacturing, processing, or handling equipment is directly captured or controlled by the associated air pollution control equipment experiencing failure. Notwithstanding the above, a furnace, following the failure of that furnace's associated air pollution control equipment, may be tapped once; thereby reducing the level of molten material in the furnace and protecting the immediate health and safety of plant personnel and equipment. This provision does not limit or waive the permittee's right to pursue a variance request pursuant to 45CSR§7-10. Any decision by the Secretary in regards to such a variance request shall, for purposes of Consent Judgment CO-R7-95-13: Civil Action 94-C-1084, be deemed a final agency action, appealable directly to the Kanawha County Circuit Court pursuant to W.Va.R.C.p.81(a)(1). The permittee shall abide by the above referenced provisions pending review of this matter by the Kanawha County Circuit Court.

20. Facility-Wide Applicable Requirements

List all facility-wide applicable requirements. For each applicable requirement, include the underlying rule/regulation citation and/or construction permit with the condition number. (*Note: Title V permit condition numbers alone are not the underlying applicable requirements*).

	Rule/ Regulation/ R13 Permit	Existing R30 Permit Condition	Name	Requirement
13	CO-R7-95-13, Condition 7.a.14.	3.1.13.	General Operating Provision	Notwithstanding the provisions of Section 3.1.12. of this permit, the permittee may achieve compliance with this permit and any other applicable requirement through shutdown of a source, group of sources, or the facility. The permittee may restart any source, group of sources, or facility shut down to achieve compliance provided that prior to restarting, the permittee, to the extent applicable, complies with all preceding compliance milestones applicable to the source, group of sources, or facility, as the case may be. To the extent that the permittee and the DAQ cannot agree regarding shutdown, restarting, and applicable preceding compliance milestones, either party may petition the Court for dispute resolution in accordance with Section 3.1.12. of this permit.
14	40 CFR §§ 63.1654(a)(1), (2), (3) and 45CSR34	3.1.14.	Operational and work practice standards: Fugitive dust sources	a. Each owner or operator of an affected ferromanganese and silicomanganese production facility must prepare, and at all times operate according to, a fugitive dust control plan that describes in detail the measures that will be put in place to control fugitive dust emissions from the individual fugitive dust sources at the facility. b. The owner or operator must submit a copy of the fugitive dust control plan to the designated permitting authority no later than November 21, 2001. The requirement for the owner or operator to operate the facility according to a written fugitive dust control plan is hereby incorporated in the operating permit. c. The owner or operator may use existing manuals that describe the measures in place to control fugitive dust sources required as part of a State implementation plan or other federally enforceable requirement for particulate matter to satisfy the requirements of Section 3.1.14.a. above.
15	40 CFR § 63.1655 and 45CSR34	3.1.15	Maintenance requirements	a. The owner or operator of an affected source must comply with the requirements of 40 CFR §63.6(e). b. 1. The owner or operator must develop and implement a written maintenance plan for each air pollution control device associated with submerged arc furnaces, and crushing and screening operations subject to 40 CFR part 63, subpart XXX. The owner or operator must keep the maintenance plan on record and available for the Administrator's inspection for the life of the air pollution control device or until the affected source is no longer subject to the provisions of 40 CFR Part 63. 2. To satisfy the requirement to develop maintenance plans, the owner or operator may use the affected source's standard operating procedures (SOP) manual or other plan, provided the alternative plan meets the requirements of this paragraph and is made available for inspection when requested by the Administrator. c. The procedures specified in the maintenance plan must include a preventive maintenance schedule that is consistent with good air pollution control practices for minimizing emissions and, for baghouses, ensure that the requirements specified in Section 3.2.3. of this permit are met. d. The owner or operator must perform monthly inspections of the equipment that is important to the performance of the furnace capture system. This inspection must include an examination of the physical condition of the equipment, suitable for detecting holes in ductwork or hoods, flow constrictions in ductwork due to dents or accumulated dust, and operational status of flow rate controllers (pressure sensors, dampers, damper switches, etc.). Any deficiencies must be recorded and proper maintenance and repairs performed.

20. Facility-Wide Applicable Requirements

List all facility-wide applicable requirements. For each applicable requirement, include the underlying rule/regulation citation and/or construction permit with the condition number. (*Note: Title V permit condition numbers alone are not the underlying applicable requirements*).

	Rule/ Regulation/ R13 Permit	Existing R30 Permit Condition	Name	Requirement
16	40 CFR § 63.1656(e)(1) and 45CSR34	3.1.16.	Compliance demonstration with the operational and work practice standards.	Fugitive dust sources. Failure to have a fugitive dust control plan or failure to report deviations from the plan and take necessary corrective action would be a violation of the general duty to ensure that fugitive dust sources are operated and maintained in a manner consistent with good air pollution control practices for minimizing emissions per 40 CFR §63.6(e)(1)(i).
17	CO-R7-95-13, Condition 7.b.1.A., 40 CFR § 63.1657(a)(1) and 45CSR34	3.2.1.	VE	The permittee shall conduct visual emission (VE) observations in accordance with the methodology set forth in 45CSR7A "Compliance Test Procedures for 45CSR7". Emissions from all operating baghouses shall be read at least once per shift during daylight hours for a period of at least six (6) minutes while such source is in operation and venting to the associated baghouse. This requirement does not replace any VE observation requirements under Regulation 16 or any other permit requirements. Compliance with this limit shall demonstrate compliance with the less stringent limitation of 40 CFR§ 63.1657(a)(1).
18	CO-R7-95-13, Conditions 7.b.3.	3.2.2.	VE Observation	All VE observation reports shall be conducted and completed by certified VE observers, and verified as true and accurate, and shall contain sufficient documentation to verify that all VE observations were taken in accordance with 45CSR7A. Thereafter, these records shall be maintained on file for five years at the facility as a permanent record of the permittee's VE observations.

20. Facility-Wide Applicable Requirements

List all facility-wide applicable requirements. For each applicable requirement, include the underlying rule/regulation citation and/or construction permit with the condition number. (*Note: Title V permit condition numbers alone are not the underlying applicable requirements*).

	Rule/ Regulation/ R13 Permit	Existing R30 Permit Condition	Name	Requirement
19	40 CFR § 63.1657(a)(2) and 45CSR34; 40 CFR § 63.1657(a)(4) and 45CSR34; 40 CFR § 63.1657(a)(5) and 45CSR34; and 40 CFR § 63.1657(a)(6) and 45CSR34	3.2.3.	Baghouses	a. Baghouses. The owner or operator must conduct the following activities: 1. Daily monitoring of pressure drop across each baghouse cell, or across the baghouse if it is not possible to monitor each cell individually, to ensure the pressure drop is within the normal operating range identified in the baghouse maintenance plan. (Note: Applies to crushing and screening baghouses. See Section 4.2.2.c. of this permit for furnace baghouses requirements.) 2. Weekly confirmation that dust is being removed from hoppers through visual inspection, or equivalent means of ensuring the proper functioning of removal mechanisms. 3. Daily check of compressed air supply for pulse-jet baghouses. 4. An appropriate methodology for monitoring cleaning cycles to ensure proper operation. 5. Monthly check of bag cleaning mechanisms for proper functioning through visual inspection or equivalent means. 6. Quarterly visual check of bag tension on reverse air and shaker-type baghouses to ensure that the bags are not kinked (kneed or bent) or laying on their sides. Such checks are not required for shaker-type baghouses using self-tensioning (spring loaded) devices. 7. Quarterly confirmation of the physical integrity of the baghouse structure through visual inspection of the baghouse interior for air leaks. 8. Semiannual inspection of fans for wear, material buildup, and corrosion through visual inspection, vibration detectors, or equivalent means. b. As part of the maintenance plan required by Section 3.1.15.b. of this permit, the owner or operator must develop and implement corrective action procedures to be followed in the case of the observation of visible emissions from the baghouse, or the indication through the periodic baghouse system inspections that the system is not operating properly. The owner or operator must initiate corrective action as soon as practicable after the occurrence of the observation or event indicating a problem. c. The corrective action plan in Section 3.2.3.b. of this permit must include procedures used to determine the cause of a deviation or other indications of problems as well as actions to minimize emissions. These actions may include the following: 1. Inspecting the baghouse for air leaks, torn or broken bags or filter media, or any other condition that may cause an increase in emissions. 2. Sealing off defective bags or filter media. 3. Replacing defective bags or filter media, or otherwise repairing the control device. 4. Sealing off a defective baghouse compartment. 5. Shutting down the process producing the particulate matter emissions. d. Failure to monitor or failure to take corrective action under the requirements of Section 3.2.3. of this permit would be a violation of the general duty to operate in a manner consistent with good air pollution control practices that minimizes emissions per 60 CFR §63.6(e)(1)(i).

20. Facility-Wide Applicable Requirements

List all facility-wide applicable requirements. For each applicable requirement, include the underlying rule/regulation citation and/or construction permit with the condition number. (*Note: Title V permit condition numbers alone are not the underlying applicable requirements*).

	Rule/ Regulation/ R13 Permit	Existing R30 Permit Condition	Name	Requirement
20	WV Code § 22-5-4(a)(15)	3.3.1.	Stack testing	As per provisions set forth in this permit or as otherwise required by the Secretary, in accordance with the West Virginia Code, underlying regulations, permits and orders, the permittee shall conduct test(s) to determine compliance with the emission limitations set forth in this permit and/or established or set forth in underlying documents. The Secretary, or his duly authorized representative, may at his option witness or conduct such test(s). Should the Secretary exercise his option to conduct such test(s), the operator shall provide all necessary sampling connections and sampling ports to be located in such manner as the Secretary may require, power for test equipment and the required safety equipment, such as scaffolding, railings and ladders, to comply with generally accepted good safety practices. Such tests shall be conducted in accordance with the methods and procedures set forth in this permit or as otherwise approved or specified by the Secretary in accordance with the following: a. The Secretary may on a source-specific basis approve or specify additional testing or alternative testing to the test methods specified in the permit for demonstrating compliance with 40 C.F.R. Parts 60, 61, and 63, if applicable, in accordance with the Secretary's delegated authority and any established equivalency determination methods which are applicable. b. The Secretary may on a source-specific basis approve or specify additional testing or alternative testing to the test methods specified in the permit for demonstrating compliance with applicable requirements which do not involve federal delegation. In specifying or approving such alternative testing to the test methods, the Secretary, to the extent possible, shall utilize the same equivalency criteria as would be used in approving such changes under Section 3.3.1.a. of this permit. c. All periodic tests to determine mass emission limits from or air pollutant concentrations in discharge stacks and such other tests as specified in this permit shall be conducted in accordance with an approved test protocol. Unless previously approved, such protocols shall be submitted to the Secretary in writing at least thirty (30) days prior to any testing and shall contain the information set forth by the Secretary. In addition, the permittee shall notify the Secretary at least fifteen (15) days prior to any testing so the Secretary may have the opportunity to observe such tests. This notification shall include the actual date and time during which the test will be conducted and, if appropriate, verification that the tests will fully conform to a referenced protocol previously approved by the Secretary.
21	40 CFR § 63.1656(a) and 45CSR34	3.3.2.	Performance testing, test methods, and compliance demonstrations.	Performance testing, test methods, and compliance demonstrations. a. All performance tests must be conducted according to the requirements in 40 CFR §63.7. b. Each performance test must consist of three separate and complete runs using the applicable test methods. c. Each run must be conducted under conditions that are representative of normal process operations. d. Performance tests conducted on air pollution control devices serving submerged arc furnaces must be conducted such that at least one tapping period, or at least 20 minutes of a tapping period, whichever is less, is included in at least two of the three runs. The sampling time for each run must be at least as long as three times the average tapping period of the tested furnace, but no less than 60 minutes. e. The sample volume for each run must be at least 30 dscf.

20. Facility-Wide Applicable Requirements

List all facility-wide applicable requirements. For each applicable requirement, include the underlying rule/regulation citation and/or construction permit with the condition number. (*Note: Title V permit condition numbers alone are not the underlying applicable requirements*).

	Rule/ Regulation/ R13 Permit	Existing R30 Permit Condition	Name	Requirement
22	40 CFR § 63.1656(b) and 45CSR34	3.3.3.	Test methods	Test methods. The following test methods in 40 CFR part 60, Appendix A must be used to determine compliance with the emission standards. a. Method 1 to select the sampling port location and the number of traverse points. b. Method 2 to determine the volumetric flow rate of the stack gas. c. Method 3 to determine the dry molecular weight of the stack gas. d. Method 4 to determine the moisture content of the stack gas. e. Method 5 to determine the particulate matter concentration of the stack gas for negative pressure baghouses and positive pressure baghouses with stacks. f. Method 5D to determine particulate matter concentration and volumetric flow rate of the stack gas for positive pressure baghouses without stacks. g. Method 9 to determine opacity. h. The owner or operator may use equivalent alternative measurement methods approved by the Administrator following the procedures described in 40 CFR §63.7(f).
23	45CSR§30-5.1.c.2.A. and 45CSR13, R13-2857, Condition 4.3.1	3.4.1.	Monitoring information.	The permittee shall keep records of monitoring information that include the following: a. The date, place as defined in this permit, and time of sampling or measurements; b. The date(s) analyses were performed; c. The company or entity that performed the analyses; d. The analytical techniques or methods used; e. The results of the analyses; and f. The operating conditions existing at the time of sampling or measurement.
24	45CSR§30-5.1.c.2.B.	3.4.2.	Retention of records.	The permittee shall retain records of all required monitoring data and support information for a period of at least five (5) years from the date of monitoring sample, measurement, report, application, or record creation date. Support information includes all calibration and maintenance records and all original strip-chart recordings for continuous monitoring instrumentation, and copies of all reports required by the permit. Where appropriate, records may be maintained in computerized form in lieu of the above records.
25	45CSR§30-5.1.c. State-Enforceable only.	3.4.3.	Odors.	For the purposes of 45CSR4, the permittee shall maintain a record of all odor complaints received, any investigation performed in response to such a complaint, and any responsive actions taken.
26	CO-R7-95-13, Condition 7.b.2.B.	3.4.4.	Water Usage	The permittee shall record on a daily basis the hours of operation and gallons of water or other materials used in operation of pressurized particulate suppressant truck.

20. Facility-Wide Applicable Requirements

List all facility-wide applicable requirements. For each applicable requirement, include the underlying rule/regulation citation and/or construction permit with the condition number. (*Note: Title V permit condition numbers alone are not the underlying applicable requirements*).

	Rule/ Regulation/ R13 Permit	Existing R30 Permit Condition	Name	Requirement
27	40 CFR § 63.1660(a) and 45CSR34 40 CFR §§ 63.1660(b)(1)(ii), (v), (vi), (vii) and 45CSR34 40 CFR § 63.1660(b)(2) and 45CSR34	3.4.5.	General recordkeeping requirements & Specific recordkeeping requirement.	a. General recordkeeping requirements. 1. The owner or operator of a ferromanganese and silicomanganese production facility must comply with all of the recordkeeping requirements under 40 CFR §63.10. 2. As required by 40 CFR §63.10(b)(2), the owner or operator must maintain records for 5 years from the date of each record of: i. The occurrence and duration of each startup, shutdown, or malfunction of operation (i.e., process equipment and control devices); ii. The occurrence and duration of each malfunction of the source or air pollution control equipment; iii. All maintenance performed on the air pollution control equipment; iv. Actions taken during periods of startup, shutdown, and malfunction (including corrective actions to restore malfunctioning process and air pollution control equipment to its normal or usual manner of operation) when such actions are different from the procedures specified in the startup, shutdown, and malfunction plan; v. All information necessary to demonstrate conformance with the startup, shutdown, and malfunction plan when all actions taken during periods of startup, shutdown, and malfunction (including corrective actions) are consistent with the procedures specified in such plan. This information can be recorded in a checklist or similar form (see 40 CFR §63.10(b)(2)(v)); vi. All required measurements needed to demonstrate compliance with the standard and to support data that the source is required to report, including, but not limited to, performance test measurements (including initial and any subsequent performance tests) and measurements as may be necessary to determine the conditions of the initial test or subsequent tests; vii. All results of initial or subsequent performance tests; viii. If the owner or operator has been granted a waiver from recordkeeping or reporting requirements under 40 CFR § 63.10(f), any information demonstrating whether a source is meeting the requirements for a waiver of recordkeeping or reporting requirements; ix. If the owner or operator has been granted a waiver from the initial performance test under 40 CFR §63.7(h), a copy of the full request and the Administrator's approval or disapproval; x. All documentation supporting initial notifications and notifications of compliance status required by 40 CFR §63.9; and xi. As required by 40 CFR §63.10(b)(3), records of any applicability determination, including supporting analyses. b. Specific recordkeeping requirements. 1. In addition to the general records required by Section 3.4.5.a. of this permit, the owner or operator must maintain records for 5 years from the date of each record of: i. Records of manufacturer certification that monitoring devices are accurate to within 5 percent (unless otherwise specified in 40 CFR part 63, subpart XXX) and of calibrations performed at the manufacturer's recommended frequency, or at a frequency consistent with good engineering practice, or as experience dictates. ii. Copy of the written maintenance plan for each air pollution control device. iii. Copy of the fugitive dust control plan. iv. Records of each maintenance inspection and repair, replacement, or other corrective action. 2. All records for the most recent 2 years of operation must be maintained on site. Records for the previous 3 years may be maintained off site.

20. Facility-Wide Applicable Requirements

List all facility-wide applicable requirements. For each applicable requirement, include the underlying rule/regulation citation and/or construction permit with the condition number. (*Note: Title V permit condition numbers alone are not the underlying applicable requirements*).

	Rule/ Regulation/ R13 Permit	Existing R30 Permit Condition	Name	Requirement
28	45CSR§30-4.4 . and 5.1.c.3.D.	3.5.1.	Responsible official.	Any application form, report, or compliance certification required by this permit to be submitted to the DAQ and/or USEPA shall contain a certification by the responsible official that states that, based on information and belief formed after reasonable inquiry, the statements and information in the document are true, accurate and complete.
29	45CSR§30-5.1.c.3.E.	3.5.2.	Confidential Treatment	A permittee may request confidential treatment for the submission of reporting required under 45CSR§30-5.1.c.3. pursuant to the limitations and procedures of W.Va. Code § 22-5-10 and 45CSR31.
30	NA	3.5.3.	All notices, requests, demands, submissions and other communications	All notices, requests, demands, submissions and other communications required or permitted to be made to the Secretary of DEP and/or USEPA shall be made in writing and shall be deemed to have been duly given when delivered by hand, mailed first class, or by private carrier with postage prepaid to the address(es) set forth below or to such other person or address as the Secretary of the Department of Environmental Protection may designate:
31	45CSR§30-8.	3.5.4.	Certified emissions statement.	The permittee shall submit a certified emissions statement and pay fees on an annual basis in accordance with the submittal requirements of the Division of Air Quality.
32	45CSR§30-5.3.e.	3.5.5.	Compliance certification.	The permittee shall certify compliance with the conditions of this permit on the forms provided by the DAQ. In addition to the annual compliance certification, the permittee may be required to submit certifications more frequently under an applicable requirement of this permit. The annual certification shall be submitted to the DAQ and USEPA on or before March 15 of each year, and shall certify compliance for the period ending December 31. The permittee shall maintain a copy of the certification on site for five (5) years from submittal of the certification.
33	45CSR§30-5.1.c.3.A.	3.5.6.	Semi-annual monitoring reports.	The permittee shall submit reports of any required monitoring on or before September 15 for the reporting period January 1 to June 30 and on or before March 15 for the reporting period July 1 to December 31. All instances of deviation from permit requirements must be clearly identified in such reports. All required reports must be certified by a responsible official consistent with 45CSR§30-4.4.
34	NA	3.5.7.	Emergencies.	For reporting emergency situations, refer to Section 2.17 of this permit.

20. Facility-Wide Applicable Requirements

List all facility-wide applicable requirements. For each applicable requirement, include the underlying rule/regulation citation and/or construction permit with the condition number. (*Note: Title V permit condition numbers alone are not the underlying applicable requirements*).

	Rule/ Regulation/ R13 Permit	Existing R30 Permit Condition	Name	Requirement
35	45CSR§30-5.1.c.3.C. and 45CSR§30-5.1.c.3.B.	3.5.8.	Deviations.	a. In addition to monitoring reports required by this permit, the permittee shall promptly submit supplemental reports and notices in accordance with the following: 1. Any deviation resulting from an emergency or upset condition, as defined in 45CSR§30-5.7., shall be reported by telephone or telefax within one (1) working day of the date on which the permittee becomes aware of the deviation, if the permittee desires to assert the affirmative defense in accordance with 45CSR§30-5.7. A written report of such deviation, which shall include the probable cause of such deviations, and any corrective actions or preventative measures taken, shall be submitted and certified by a responsible official within ten (10) days of the deviation. 2. Any deviation that poses an imminent and substantial danger to public health, safety, or the environment shall be reported to the Secretary immediately by telephone or telefax. A written report of such deviation, which shall include the probable cause of such deviation, and any corrective actions or preventative measures taken, shall be submitted by the responsible official within ten (10) days of the deviation. 3. Deviations for which more frequent reporting is required under this permit shall be reported on the more frequent basis. 4. All reports of deviations shall identify the probable cause of the deviation and any corrective actions or preventative measures taken. b. The permittee shall, in the reporting of deviations from permit requirements, including those attributable to upset conditions as defined in this permit, report the probable cause of such deviations and any corrective actions or preventive measures taken in accordance with any rules of the Secretary.
36	45CSR§30-4.3.h.1.B.	3.5.9.	New applicable requirements.	If any applicable requirement is promulgated during the term of this permit, the permittee will meet such requirements on a timely basis, or in accordance with a more detailed schedule if required by the applicable requirement.
37	CO-R7-95-13, Conditions 7.b.1.C.	3.5.10.	VE observation records	The permittee shall maintain all VE observation records on site for a period of at least five years and shall provide to the Director on a monthly basis a copy of all visible emissions observations certified by plant management to be an accurate and true report for the previous month.
38	CO-R7-95-13, Conditions 7.b.7.	3.5.11.	Failure of air pollution control equipment	For any failure of air pollution control equipment subject to the provisions in Section 3.1.12. of this permit, with a duration in excess of two (2) hours, the permittee is required to: notify the Division of Air Quality regarding the failure of air pollution control equipment within twenty-four (24) hours, excluding weekends and holidays, by telephone; and record the date, time, and duration of the failure of air pollution control equipment, the steps taken to determine the cause of the failure of air pollution control equipment, and the steps taken by the permittee to minimize emissions and their impact. The permittee is required to summarize this information in a written report to be submitted within fourteen (14) days to the Director, Division of Air Quality. The permittee shall retain a copy of this notice letter in its files for a period of five (5) years.
39	CO-R7-95-13, Conditions 7.b.8.	3.5.12.	Any reports	Any reports required under the provisions of Section 3.5.10. of this permit shall be provided to the Director within thirty (30) days of the end of the month.

20. Facility-Wide Applicable Requirements

List all facility-wide applicable requirements. For each applicable requirement, include the underlying rule/regulation citation and/or construction permit with the condition number. (*Note: Title V permit condition numbers alone are not the underlying applicable requirements*).

	Rule/ Regulation/ R13 Permit	Existing R30 Permit Condition	Name	Requirement
40	40 CFR §§ 63.1658(a)(1),(2), (5) and 45CSR34	3.5.13.	Written notifications	As required by 40 CFR §63.9(b), unless otherwise specified, the owner or operator must submit the following written notifications to the Administrator: a. As required by 40 CFR §63.9(b)(2), the owner or operator of an affected source that has an initial startup before the effective date of the standard must notify the Administrator that the source is subject to the requirements of the standard. The notification must be submitted no later than 120 calendar days after May 20, 1999 (or within 120 calendar days after the source becomes subject to this standard) and must contain the information specified in 40 CFR §63.9(b)(2)(i) through (b)(2)(v). b. As required by 40 CFR §63.9(b)(5), the owner or operator who, after the effective date of this standard, intends to construct a new affected source or reconstruct an affected source subject to this standard, or reconstruct a source such that it becomes an affected source subject to this standard, must notify the Administrator, in writing, of the intended construction or reconstruction.
41	40 CFR § 63.1658(f) and 45CSR34	3.5.14.	Notification of compliance status.	The owner or operator of an affected source must submit a notification of compliance status as required by 40 CFR §63.9(h). The notification must be sent in accordance with Sections 3.5.6. and 3.5.15.a.1. of this permit.

20. Facility-Wide Applicable Requirements

List all facility-wide applicable requirements. For each applicable requirement, include the underlying rule/regulation citation and/or construction permit with the condition number. (*Note: Title V permit condition numbers alone are not the underlying applicable requirements*).

	Rule/ Regulation/ R13 Permit	Existing R30 Permit Condition	Name	Requirement
42	40 CFR §63.10 of subpart A and 40 CFR part 63, subpart XXX. 40 CFR § 63.1659 and 45CSR34	3.5.15.	General reporting requirements.	a. General reporting requirements. The owner or operator of a ferromanganese and silicomanganese production facility must comply with all of the reporting requirements under 40 CFR §63.10 of subpart A, unless otherwise specified in 40 CFR part 63, subpart XXX. 1. Frequency of reports. As provided by 40 CFR §63.10(a)(5), if the owner or operator is required to submit periodic reports to a State on an established time line, he or she may change the dates by which periodic reports submitted under this part may be submitted (without changing the frequency of reporting) to be consistent with the State's schedule by mutual agreement between the owner or operator and the State. This provision may be applied at any point after the source's compliance date. 2. Reporting results of performance tests. As required by 40 CFR §63.10(d)(2), the owner or operator of an affected source must report the results of the initial performance test as part of the notification of compliance status required in Section 3.5.14. of this permit. 3. Periodic startup, shutdown, and malfunction reports. i. As required by 40 CFR §63.10(d)(5)(i), if actions taken by an owner or operator during a startup, shutdown, or malfunction of an affected source (including actions taken to correct a malfunction) are consistent with the procedures specified in the startup, shutdown, and malfunction plan, the owner or operator must state such information in a semiannual report. The report, to be certified by the owner or operator or other responsible official, must be submitted semiannually in accordance with Section 3.5.6. of this permit; and ii. Any time an action taken by an owner or operator during a startup, shutdown, or malfunction (including actions taken to correct a malfunction) is not consistent with the procedures in the startup, shutdown, and malfunction plan, the owner or operator must comply with all requirements of 40 CFR §63.10(d)(5)(ii). b. Specific reporting requirements. In addition to the information required under 40 CFR §63.10, reports required under Section 3.5.15.a. of this permit must include the information specified in paragraphs b.1. through b.4. below. As allowed by 40 CFR §63.10(a)(3), if any State requires a report that contains all of the information required in a report listed in this section, an owner or operator may send the Administrator a copy of the report sent to the State to satisfy the requirements of this section for that report. 1. Air pollution control devices. The owner or operator must submit reports that summarize the records maintained as part of the practices described in the maintenance plan for air pollution control devices required under Section 3.1.15.b. of this permit, including an explanation of the periods when the procedures were not followed and the corrective actions taken. 2. Fugitive dust. The owner or operator must submit reports that explain the periods when the procedures outlined in the fugitive dust control plan pursuant to Section 3.1.14.a. were not followed and the corrective actions taken. 3. Capture system. The owner or operator must submit reports that summarize the monitoring parameter excursions measured pursuant to Section 4.2.4. of this permit and the corrective actions taken. 4. Frequency of reports. The owner or operator must submit reports pursuant to 40 CFR §63.10(e)(3)that are associated with excess emissions events. These reports are to be submitted on a quarterly basis, unless the owner or operator can satisfy the requirements in 40 CFR §63.10(e)(3) to reduce the frequency to a semiannual basis. All other reports specified in paragraphs b.1. through b.3. above must be submitted semiannually.
43	45CSR§30-4.3.h.1.c.	3.6.1.	Fugitive dust control plan	The permittee shall submit a fugitive dust control plan in accordance with Section 3.1.14. of this permit within 90 days of the effective date of the Title V Permit.

20. Facility-Wide Applicable Requirements

List all facility-wide applicable requirements. For each applicable requirement, include the underlying rule/regulation citation and/or construction permit with the condition number. (*Note: Title V permit condition numbers alone are not the underlying applicable requirements*).

	Rule/ Regulation/ R13 Permit	Existing R30 Permit Condition	Name	Requirement
44	45CSR§30-4.3.h.1.c.	3.6.2.	MACT Notification	The permittee shall submit a written notification that the source is subject to the MACT in accordance with Section 3.5.13.b. of this permit within 60 days of the effective date of the Title V Permit.
45	45CSR§30-5.6.	3.7.1.	Permit Shield	The permittee is hereby granted a permit shield in accordance with 45CSR§30-5.6. The permit shield applies provided the permittee operates in accordance with the information contained within this permit.
46	R13-1110, CO 5-16-1989, CO-R7-95-13, CO-R7-E-2004-13, 40 CFR Part 60, subpart K, Ka, and Kb, 40 CFR Part 60, subpart Z, 40 CFR 64 - Compliance Assurance Monitoring (CAM)	3.7.2.	Additional Requirements	The following requirements specifically identified are not applicable to the source based on the determinations set forth below. The permit shield shall apply to the following requirements provided the conditions of the determinations are met. a. R13-1110 authorized the construction of Furnace No. 9, however the Furnace has since been dismantled. b. Consent Orders - CO 5-16-1989 required the permittee to obtain a Rule 13 permit for the construction of Furnace No. 9 which has since been dismantled. CO-R7-95-13, Condition 7.a.5.A. required the permittee to maintain the pressure drop monitors on the MGO baghouse, which will not be used. CO-R7-E-2004-13 required the permittee to obtain a permit for the jig plant and No. 9 Furnace which are no longer at the facility. Amendment to MM-06-001 amended Consent Order MM-06-001 by extending the deadline to submit a completed Title V Permit application. The Title V Permit application has been submitted. c. 40 CFR Part 60, subpart K, Ka, and Kb - The facility has three above ground storage tanks with capacities less than 19,813 gallons. d. 40 CFR Part 60, subpart Z does not apply to Electric Arc Furnaces No. 2 and No. 5, which were installed in 1966, and in January, 1974, respectively. Nor does it apply to Electric Arc Furnace No. 7, which commenced construction in March 1974 when the owner or operator entered into contractual obligations. e. 40 CFR 64 - Compliance Assurance Monitoring (CAM). The Electric Arc Furnaces are subject to SO2 limits in accordance with 45CSR10, however there are no control devices used to comply with the limit, thus the Furnaces are not pollutant specific emissions units (PSEUs) for SO2 in accordance with 40 CFR §64.2(a)(2). The Electric Arc Furnaces, the crushing and screening equipment, and fugitive dust sources are subject to the Ferroalloys Production MACT which regulates PM emissions, thus these sources are not subject to CAM for PM in accordance with 40 CFR §64.2(b)(1)(i).

20. Facility-Wide Applicable Requirements

List all facility-wide applicable requirements. For each applicable requirement, include the underlying rule/regulation citation and/or construction permit with the condition number. (*Note: Title V permit condition numbers alone are not the underlying applicable requirements*).

	Rule/ Regulation/ R13 Permit	Existing R30 Permit Condition	Name	Method of Compliance
1	CO-R7-95-13, Condition 7.a.11.A and 45CSR§6-3.1.	3.1.1.	Open burning	NA - No open burning allowed.
2	40 C.F.R. 61 and 45CSR15	3.1.2.	Asbestos	Inspection will occur as required.
3	45CSR§4-3.1 State-Enforceable only	3.1.3.	Odor	Recordkeeping of complaints made to the company.
4	45CSR§11-5.2	3.1.4.	Standby plan for reducing emissions	When requested.
5	W.Va. Code § 22-5-4(a)(14)	3.1.5.	Emission inventory	Reporting.
6	40 C.F.R. 82, Subpart F	3.1.6.	Ozone-depleting substances	Requirement to follow: a. 40CFR§§82.154 & 156; b. 40CFR§8a.158; c. 40CFR§82.161.
7	40 C.F.R. 68	3.1.7.	Risk Management Plan	Submission if required.
8	45CSR§7-5.1. and 45CSR13, R13-2857, Condition 4.1.15.	3.1.8.	Fugitive Particulate Matter	Maintain control of emissions.
9	45CSR§7-5.2.	3.1.9.	Particulate Matter Control	Maintain control of emissions.
10	CO-R7-95-13, Condition 7.a.11.C.	3.1.10.	Pressurized Particulate Suppressant Spray Truck	Maintain truck on-site.
11	CO-R7-95-13, Condition 7.a.12.	3.1.11.	Implementation of a Preventative Maintenance Program	Recordkeeping.
12	[CO-R7-95-13, Condition 7.a.13.]	3.1.12.	General Operating Provision	Action required with emissions control loss for furnaces.
13	CO-R7-95-13, Condition 7.a.14.	3.1.13.	General Operating Provision	NA
14	40 CFR §§ 63.1654(a)(1), (2), (3) and 45CSR34	3.1.14.	Operational and work practice standards: Fugitive dust sources	Prepare a fugitive dust control plan.
15	40 CFR § 63.1655 and 45CSR34	3.1.15	Maintenance requirements	Prepare a maintenance plan.

20. Facility-Wide Applicable Requirements

List all facility-wide applicable requirements. For each applicable requirement, include the underlying rule/regulation citation and/or construction permit with the condition number. (*Note: Title V permit condition numbers alone are not the underlying applicable requirements*).

	Rule/ Regulation/ R13 Permit	Existing R30 Permit Condition	Name	Method of Compliance
16	40 CFR § 63.1656(e)(1) and 45CSR34	3.1.16.	Compliance demonstration with the operational and work practice standards.	Prepare a fugitive dust control plan and reporting of deviations.
17	CO-R7-95-13, Condition 7.b.1.A., 40 CFR § 63.1657(a)(1) and 45CSR34	3.2.1.	VE	Perform VE.
18	CO-R7-95-13, Conditions 7.b.3.	3.2.2.	VE Observation	Perform VE and maintain records.
19	40 CFR § 63.1657(a)(2) and 45CSR34; 40 CFR § 63.1657(a)(4) and 45CSR34; 40 CFR § 63.1657(a)(5) and 45CSR34; and 40 CFR § 63.1657(a)(6) and 45CSR34	3.2.3.	Baghouses	Monitoring and Recordkeeping.
20	WV Code § 22-5-4(a)(15)	3.3.1.	Stack testing	Stack test as required by the permit and as requested by the Secretary.
21	40 CFR § 63.1656(a) and 45CSR34	3.3.2.	Performance testing, test methods, and compliance demonstrations.	Follow appropriate methods for stack testing.
22	40 CFR § 63.1656(b) and 45CSR34	3.3.3.	Test methods	Follow appropriate methods for stack testing.
23	45CSR§30-5.1.c.2.A. and 45CSR13, R13-2857, Condition 4.3.1	3.4.1.	Monitoring information.	Requirements for maintaining records.
24	45CSR§30-5.1.c.2.B.	3.4.2.	Retention of records.	Requirements for maintaining records.
25	45CSR§30-5.1.c. State-Enforceable only.	3.4.3.	Odors.	Maintain a record of odor complaints.
26	CO-R7-95-13, Condition 7.b.2.B.	3.4.4.	Water Usage	Record water usage on a daily basis. Maintain records.
27	40 CFR § 63.1660(a) and 45CSR34 40 CFR §§63.1660(b)(i)(ii)(v)(vi)(vii) 45 CSR34; 40 CFR§63.1660(b)(2); 45CSR34	3.4.5.	General recordkeeping requirements & Specific recordkeeping requirements.	Recordkeeping.
28	45CSR§30-4.4 .and 5.1.c.3.D.	3.5.1.	Responsible official.	Submissions are signed by a responsible official.
29	45CSR§30-5.1.c.3.E.	3.5.2.	Confidential Treatment	NA

20. Facility-Wide Applicable Requirements

List all facility-wide applicable requirements. For each applicable requirement, include the underlying rule/regulation citation and/or construction permit with the condition number. (*Note: Title V permit condition numbers alone are not the underlying applicable requirements*).

	Rule/ Regulation/ R13 Permit	Existing R30 Permit Condition	Name	Method of Compliance
30	BA	3.5.3.	All notices, requests, demands, submissions and other communications	NA
31	45CSR§30-8.	3.5.4.	Certified emissions statement	Submit form and payment.
32	45CSR§30-5.3.e.	3.5.5.	Compliance Certification	Submit annual compliance certifications.
33	45CSR§30-5.1.c.3.A.	3.5.6.	Semi-annual Monitoring Reports	Submit semi-annual monitoring reports.
34	45CSR§30-5.7.a.	3.5.7.	Emergencies	Reporting.
35	45CSR§30-5.1.c.3.C. and 45CSR§30-5.1.c.3.B.	3.5.8.	Deviations	Reporting.
36	45CSR§30-4.3.h.1.B.	3.5.9.	New Applicable Requirements	NA
37	CO-R7-95-13, Conditions 7.b.1.C.	3.5.10.	VE Observation Records	Maintain records.
38	CO-R7-95-13, Conditions 7.b.7.	3.5.11.	Failure of Air Pollution Control Equipment	Notification, recordkeeping, and reporting.
39	CO-R7-95-13, Conditions 7.b.8.	3.5.12.	Any Reports	Meet submission timeframe.
40	40 CFR §§ 63.1658(a)(1),(2), (5) and 45CSR34	3.5.13.	Written Notifications	Notification.
41	40 CFR § 63.1658(f) and 45CSR34	3.5.14.	Notification of Compliance Status	Notification.
42	40 CFR §63.10 of subpart A and 40 CFR part 63, subpart XXX. [40 CFR § 63.1659 and 45CSR34]	3.5.15. a.	General Reporting Requirements.	Reporting.
43	45CSR§30-4.3.h.1.c.	3.6.1.	Fugitive Dust Control Plan	Submit a fugitive dust control plan.
44	45CSR§30-4.3.h.1.c.	3.6.2.	MACT Notification	Notification as required.
45	45CSR§30-5.6.	3.7.1.	Permit Shield	NA

20. Facility-Wide Applicable Requirements

List all facility-wide applicable requirements. For each applicable requirement, include the underlying rule/regulation citation and/or construction permit with the condition number. (*Note: Title V permit condition numbers alone are not the underlying applicable requirements*).

	Rule/ Regulation/ R13 Permit	Existing R30 Permit Condition	Name	Method of Compliance
46	R13-1110, CO 5-16-1989, CO-R7-95-13, CO-R7-E-2004-13, 40 CFR Part 60, subpart K, Ka, and Kb, 40 CFR Part 60, subpart Z, 40 CFR 64 - Compliance Assurance Monitoring (CAM)	3.7.2.	Additional Requirements	Follow requirements.

21. Active Permits/Consent Orders		
Permit or Consent Order Number	Date of Issuance MM/DD/YYYY	List any Permit Determinations that Affect the Permit *(if any)*
45CSR13 R13-1110	06/09/1989	
CO 11-8-90	11/08/1990	CO-R7, 13, 16-91-4
CO-R7, 13, 16-91-4	01/22/1991	CO-R7, 13, 16-93-1
CO-R7, 13, 16-93-1	04/16/1993	CO-R7-95-13, Civil Action No. 94-C-1084
CO-R7, 95, 13 Civil Action No. 94-C-1084	04/20/1995	
CO-R7-E-2004-13	09/28/2004	
MM-06-001	01/24/2006	Amendment to MM-06-001
CO-R34-E-2008-12	08/13/2008	
R13-2857	12/20/2010	
CO-R34-E-2011-05	06/01/2011	
	/ /	
	/ /	
	/ /	
	/ /	
	/ /	
	/ /	
	/ /	
	/ /	
	/ /	
	/ /	
	/ /	
	/ /	
	/ /	

22. Inactive Permits/Obsolete Permit Conditions		
Permit Number	Date of Issuance	Permit Condition Number
R13-0104	NA	
	/ /	
	/ /	
	/ /	
	/ /	
	/ /	
	/ /	
	/ /	
	/ /	
	/ /	
	/ /	
	/ /	
	/ /	
	/ /	
	/ /	
	/ /	
	/ /	
	/ /	
	/ /	
	/ /	

Section 3: Facility-Wide Emissions

23. Facility-Wide Emissions Summary [Tons per Year]	
Criteria Pollutants	Potential Emissions
Carbon Monoxide (CO)	1,146.25
Nitrogen Oxides (NO_X)	16.69
Lead (Pb)	0.003
Particulate Matter ($PM_{2.5}$)[1]	265.27
Particulate Matter (PM_{10})[1]	265.27
Total Particulate Matter (TSP)	316.31
Sulfur Dioxide (SO_2)	1,203.16
Volatile Organic Compounds (VOC)	878.99
Hazardous Air Pollutants[2]	Potential Emissions
Arsenic	0.0017
Cadmium	0.005
Chromium	0.009
Manganese	51.37
Mercury	0.002
Nickel	0.259
Selenium	0.0504
Regulated Pollutants other than Criteria and HAP	Potential Emissions

[1]$PM_{2.5}$ and PM_{10} are components of TSP.
[2]For HAPs that are also considered PM or VOCs, emissions should be included in both the HAPs section and the Criteria Pollutants section.

Section 4: Insignificant Activities

24. Insignificant Activities (Check all that apply)		
☒	1.	Air compressors and pneumatically operated equipment, including hand tools.
☒	2.	Air contaminant detectors or recorders, combustion controllers or shutoffs.
☒	3.	Any consumer product used in the same manner as in normal consumer use, provided the use results in a duration and frequency of exposure which are not greater than those experienced by consumer, and which may include, but not be limited to, personal use items; janitorial cleaning supplies, office supplies and supplies to maintain copying equipment.
☒	4.	Bathroom/toilet vent emissions.
☒	5.	Batteries and battery charging stations, except at battery manufacturing plants.
☐	6.	Bench-scale laboratory equipment used for physical or chemical analysis, but not lab fume hoods or vents. Many lab fume hoods or vents might qualify for treatment as insignificant (depending on the applicable SIP) or be grouped together for purposes of description.
☐	7.	Blacksmith forges.
☐	8.	Boiler water treatment operations, not including cooling towers.
☒	9.	Brazing, soldering or welding equipment used as an auxiliary to the principal equipment at the source.
☐	10.	CO_2 lasers, used only on metals and other materials which do not emit HAP in the process.
☒	11.	Combustion emissions from propulsion of mobile sources, except for vessel emissions from Outer Continental Shelf sources.
☒	12.	Combustion units designed and used exclusively for comfort heating that use liquid petroleum gas or natural gas as fuel.
☒	13.	Comfort air conditioning or ventilation systems not used to remove air contaminants generated by or released from specific units of equipment.
☐	14.	Demineralized water tanks and demineralizer vents.
☐	15.	Drop hammers or hydraulic presses for forging or metalworking.
☐	16.	Electric or steam-heated drying ovens and autoclaves, but not the emissions from the articles or substances being processed in the ovens or autoclaves or the boilers delivering the steam.
☐	17.	Emergency (backup) electrical generators at residential locations.

24. Insignificant Activities (Check all that apply)		
☐	18.	Emergency road flares.
☒	19.	Emission units which do not have any applicable requirements and which emit criteria pollutants (CO, NO_x, SO_2, VOC and PM) into the atmosphere at a rate of less than 1 pound per hour and less than 10,000 pounds per year aggregate total for each criteria pollutant from all emission units. Please specify all emission units for which this exemption applies along with the quantity of criteria pollutants emitted on an hourly and annual basis: Emission units which do not have any applicable requirements and which emit criteria pollutants (CO, NOx, SO2, VOC, and PM) into the atmosphere at a rate of less than 1 pound per hour and less than 10,000 pounds per year aggregate total for each criteria pollutant from all emission units. The facility has three aboveground storage tanks for which there are no applicable requirements and whose emissions are below the insignificant level. The tanks have been designed as follows: 006-01 500 gal Gasoline Tank (0.23 ton VOC/yr) 006-02 1,000 gal Diesel Tank (6.2E-04 ton VOC/yr) 006-03 10,000 gal Diesel Tank (1.24E-03 ton VOC/yr) Emission rates were estimated using the EPA approved program TANKS2. 006-01 and -02 are used to supply fuel for vehicles. Emissions were conservatively doubled to account for working losses during vehicle refueling operations in addition to losses from the storage tank itself. 006-03 supplies diesel fuel to the Ladle Burners (00C-01) and the six diesel-powered fire pumps.
☐	20.	Emission units which do not have any applicable requirements and which emit hazardous air pollutants into the atmosphere at a rate of less than 0.1 pounds per hour and less than 1,000 pounds per year aggregate total for all HAPs from all emission sources. This limitation cannot be used for any source which emits dioxin/furans nor for toxic air pollutants as per 45CSR27. Please specify all emission units for which this exemption applies along with the quantity of hazardous air pollutants emitted on an hourly and annual basis:
☐	21.	Environmental chambers not using hazardous air pollutant (HAP) gases.
☒	22.	Equipment on the premises of industrial and manufacturing operations used solely for the purpose of preparing food for human consumption.
☐	23.	Equipment used exclusively to slaughter animals, but not including other equipment at slaughterhouses, such as rendering cookers, boilers, heating plants, incinerators, and electrical power generating equipment.
☒	24.	Equipment used for quality control/assurance or inspection purposes, including sampling equipment used to withdraw materials for analysis.
☐	25.	Equipment used for surface coating, painting, dipping or spray operations, except those that will emit VOC or HAP.
☒	26.	Fire suppression systems.
☒	27.	Firefighting equipment and the equipment used to train firefighters.
☐	28.	Flares used solely to indicate danger to the public.
☒	29.	Fugitive emission related to movement of passenger vehicle provided the emissions are not counted for applicability purposes and any required fugitive dust control plan or its equivalent is submitted.
☐	30.	Hand-held applicator equipment for hot melt adhesives with no VOC in the adhesive formulation.
☐	31.	Hand-held equipment for buffing, polishing, cutting, drilling, sawing, grinding, turning or machining wood, metal or plastic.

24. Insignificant Activities (Check all that apply)		
☐	32.	Humidity chambers.
☐	33.	Hydraulic and hydrostatic testing equipment.
☐	34.	Indoor or outdoor kerosene heaters.
☒	35.	Internal combustion engines used for landscaping purposes.
☐	36.	Laser trimmers using dust collection to prevent fugitive emissions.
☐	37.	Laundry activities, except for dry-cleaning and steam boilers.
☐	38.	Natural gas pressure regulator vents, excluding venting at oil and gas production facilities.
☐	39.	Oxygen scavenging (de-aeration) of water.
☐	40.	Ozone generators.
☒	41.	Plant maintenance and upkeep activities (e.g., grounds-keeping, general repairs, cleaning, painting, welding, plumbing, re-tarring roofs, installing insulation, and paving parking lots) provided these activities are not conducted as part of a manufacturing process, are not related to the source's primary business activity, and not otherwise triggering a permit modification. (Cleaning and painting activities qualify if they are not subject to VOC or HAP control requirements. Asphalt batch plant owners/operators must still get a permit if otherwise requested.)
☐	42.	Portable electrical generators that can be moved by hand from one location to another. "Moved by Hand" means that it can be moved without the assistance of any motorized or non-motorized vehicle, conveyance, or device.
☒	43.	Process water filtration systems and demineralizers.
☒	44.	Repair or maintenance shop activities not related to the source's primary business activity, not including emissions from surface coating or de-greasing (solvent metal cleaning) activities, and not otherwise triggering a permit modification.
☒	45.	Repairs or maintenance where no structural repairs are made and where no new air pollutant emitting facilities are installed or modified.
☐	46.	Routing calibration and maintenance of laboratory equipment or other analytical instruments.
☐	47.	Salt baths using nonvolatile salts that do not result in emissions of any regulated air pollutants. Shock chambers.
☐	48.	Shock chambers.
☐	49.	Solar simulators.
☐	50.	Space heaters operating by direct heat transfer.
☐	51.	Steam cleaning operations.
☐	52.	Steam leaks.
☐	53.	Steam sterilizers.
☐	54.	Steam vents and safety relief valves.
☐	55.	Storage tanks, reservoirs, and pumping and handling equipment of any size containing soaps, vegetable oil, grease, animal fat, and nonvolatile aqueous salt solutions, provided appropriate lids and covers are utilized.
☐	56.	Storage tanks, vessels, and containers holding or storing liquid substances that will not emit any VOC or HAP. Exemptions for storage tanks containing petroleum liquids or other volatile organic liquids should be based on size limits such as storage tank capacity and vapor pressure of liquids stored and are not appropriate for this list.
☐	57.	Such other sources or activities as the Director may determine.
☒	58.	Tobacco smoking rooms and areas.
☐	59.	Vents from continuous emissions monitors and other analyzers.

Section 5: Emission Units, Control Devices, and Emission Points

25. Equipment Table
Fill out the **Title V Equipment Table** and provide it as **ATTACHMENT D**.
26. Emission Units
For each emission unit listed in the **Title V Equipment Table**, fill out and provide an **Emission Unit Form** as **ATTACHMENT E**.
For each emission unit not in compliance with an applicable requirement, fill out a **Schedule of Compliance Form** as **ATTACHMENT F**.
27. Control Devices
For each control device listed in the **Title V Equipment Table**, fill out and provide an **Air Pollution Control Device Form** as **ATTACHMENT G**.
For any control device that is required on an emission unit in order to meet a standard or limitation for which the potential pre-control device emissions of an applicable regulated air pollutant is greater than or equal to the Title V Major Source Threshold Level, refer to the **Compliance Assurance Monitoring (CAM) Form(s)** for CAM applicability. Fill out and provide these forms, if applicable, for each Pollutant Specific Emission Unit (PSEU) as **ATTACHMENT H**.

Section 6: Certification of Information

28. Certification of Truth, Accuracy and Completeness and Certification of Compliance

*Note: This Certification must be signed by a responsible official. The **original**, signed in **blue ink**, must be submitted with the application. Applications without an **original** signed certification will be considered as incomplete.*

a. Certification of Truth, Accuracy and Completeness

I certify that I am a responsible official (as defined at 45CSR§30-2.38) and am accordingly authorized to make this submission on behalf of the owners or operators of the source described in this document and its attachments. I certify under penalty of law that I have personally examined and am familiar with the statements and information submitted in this document and all its attachments. Based on my inquiry of those individuals with primary responsibility for obtaining the information, I certify that the statements and information are to the best of my knowledge and belief true, accurate, and complete. I am aware that there are significant penalties for submitting false statements and information or omitting required statements and information, including the possibility of fine and/or imprisonment.

b. Compliance Certification

Except for requirements identified in the Title V Application for which compliance is not achieved, I, the undersigned hereby certify that, based on information and belief formed after reasonable inquiry, all air contaminant sources identified in this application are in compliance with all applicable requirements.

Responsible official (type or print)	
Name: John Konrady	Title: Plant Manager

Responsible official's signature:

Signature: John S Konrady Signature Date: FEB. 8, 2012

(Must be signed and dated in blue ink)

Note: Please check all applicable attachments included with this permit application:	
☒	ATTACHMENT A: Area Map
☒	ATTACHMENT B: Plot Plan(s)
☒	ATTACHMENT C: Process Flow Diagram(s)
☒	ATTACHMENT D: Equipment Table
☒	ATTACHMENT E: Emission Unit Form(s)
☒	ATTACHMENT F: Schedule of Compliance Form(s)
☒	ATTACHMENT G: Air Pollution Control Device Form(s)
☒	ATTACHMENT H: Compliance Assurance Monitoring (CAM) Form(s)

All of the required forms and additional information can be found and downloaded from, the DEP website at www.dep.wv.gov/daq, requested by phone (304) 926-0475, and/or obtained through the mail.

ATTACHMENT A
AREA MAP

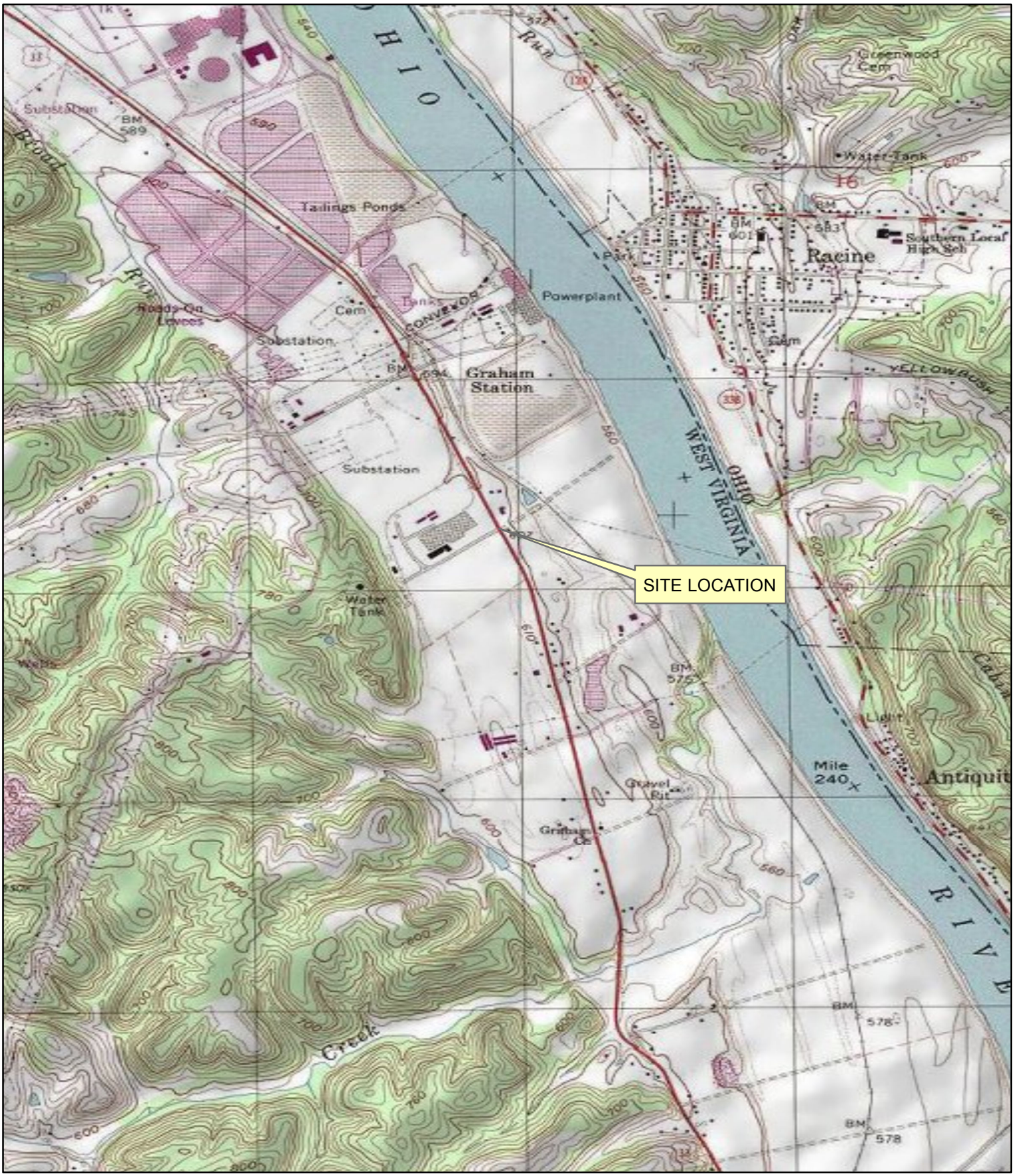

FIGURE 1
SITE LOCATION MAP
FELMAN PRODUCTION INC.
MASON COUNTY, WEST VIRGINIA

DATE: JULY 2011
P:\Projects\2011\11-0188 Felman Production Inc\Map Documents\FIGURE 1.mxd

POTESTA
ENGINEERS AND ENVIRONMENTAL CONSULTANTS

N
W E
S

0 1,000 2,000 4,000
Feet

ATTACHMENT B
PLOT PLANS

No.	Date	Revision

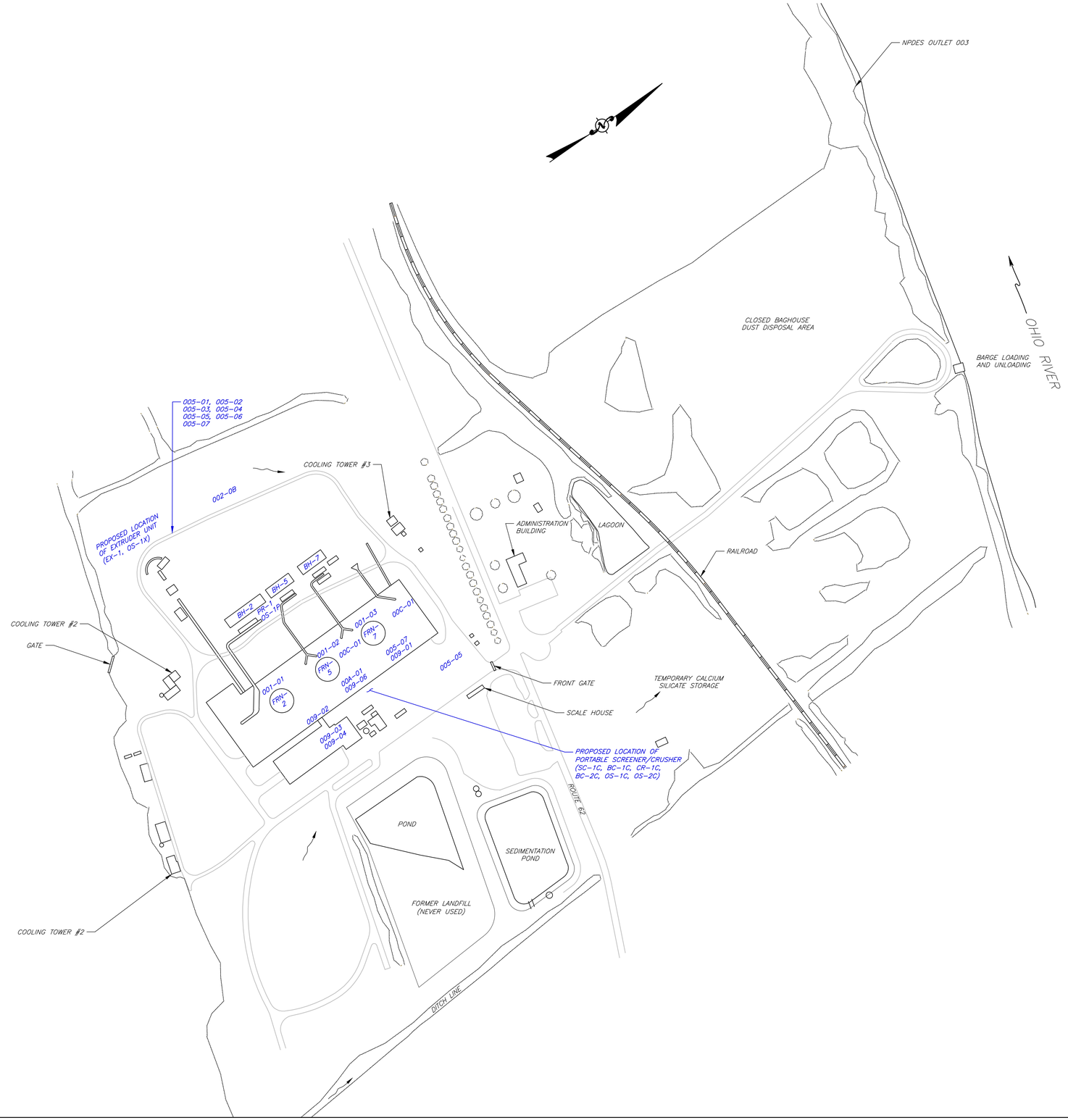

MAPPING REFERENCE:

BASE MAPPING FROM POTESTA PROJECT NO. 11-0188-005 AND WAS DEVELOPED BY FOX ENGINEERING, DATED 6/17/2011.

-01
CAD File No.

BEL
Drawn

PEW
Checked

PEW
Approved

NOT TO SCALE
Scale:

FEBRUARY 2012
Date:

11-0444
Project No.

POTESTA & ASSOCIATES, INC.
ENGINEERS AND ENVIRONMENTAL CONSULTANTS
7012 MacCorkle Ave. SE, Charleston, WV 25304
TEL: (304) 342-1400 FAX: (304) 343-9031
E-Mail Address: potesta@potesta.com

POTESTA

Client
FELMAN PRODUCTION, INC.
4442 GRAHAM STATION ROAD
LETART, WV 25253-8701

Title
SITE LAYOUT MAP
FELMAN PRODUCTION, INC.
NEW HAVEN, WV

1
Drawing No.

File: S:\CAD-Proj-PR\2011\11-0444 - FELMAN\11-0444-01.dwg
Plot Scale: 1 inch = 60 feet
Plotted By: BELesky

ATTACHMENT C
PROCESS FLOW DIAGRAMS

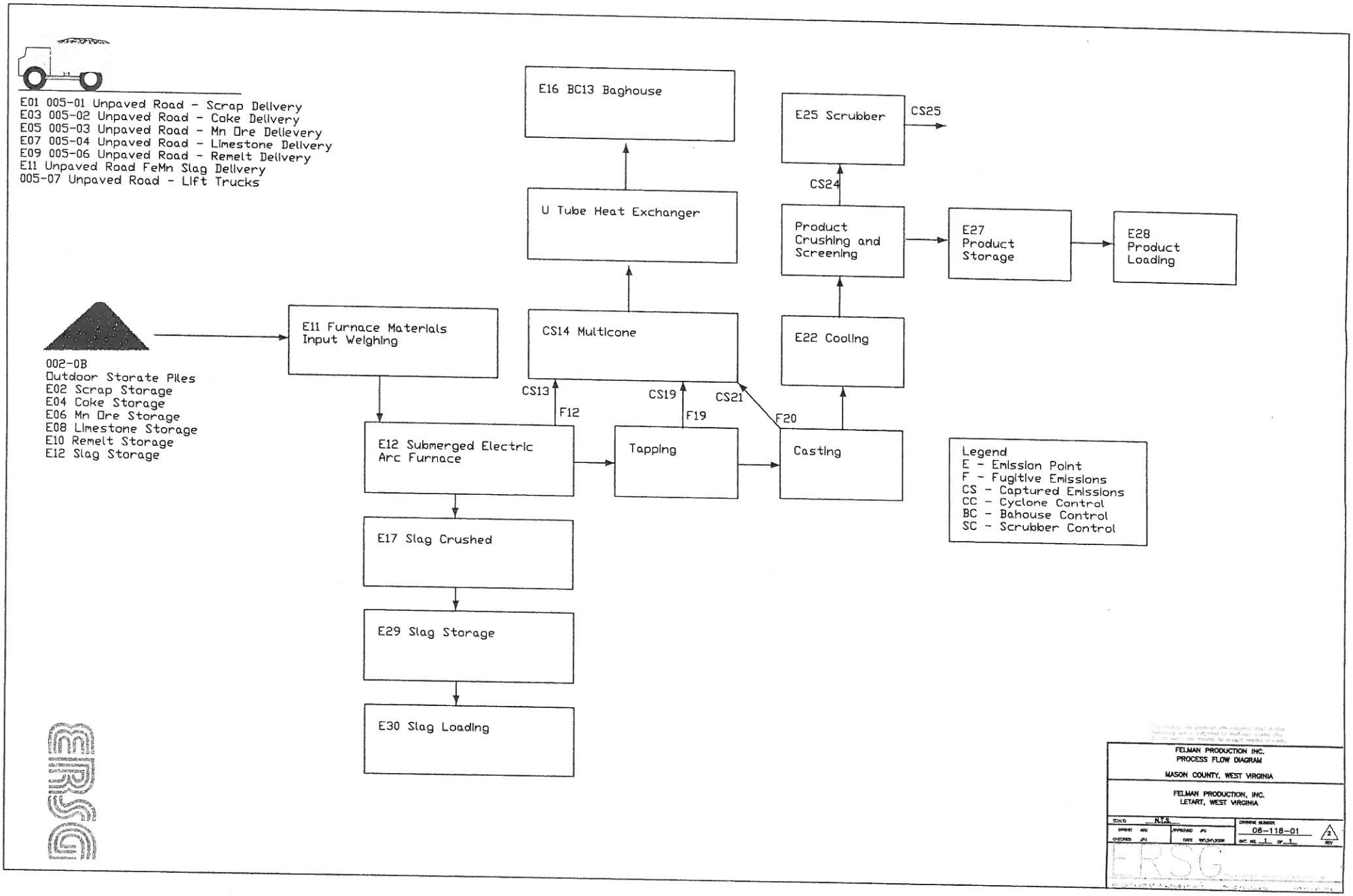
E01 005-01 Unpaved Road - Scrap Delivery
E03 005-02 Unpaved Road - Coke Delivery
E05 005-03 Unpaved Road - Mn Ore Dellevery
E07 005-04 Unpaved Road - Limestone Delivery
E09 005-06 Unpaved Road - Remelt Delivery
E11 Unpaved Road FeMn Slag Delivery
005-07 Unpaved Road - Lift Trucks
002-0B
Outdoor Storate Piles
E02 Scrap Storage
E04 Coke Storage
E06 Mn Ore Storage
E08 Limestone Storage
E10 Remelt Storage
E12 Slag Storage
E11 Furnace Materials Input Weighing
E12 Submerged Electric Arc Furnace
E17 Slag Crushed
E29 Slag Storage
E30 Slag Loading
CS13
F12
CS14 Multicone
U Tube Heat Exchanger
E16 BC13 Baghouse
CS19
F19
Tapping
CS21
F20
Casting
E22 Cooling
Product Crushing and Screening
CS24
E25 Scrubber
CS25
E27 Product Storage
E28 Product Loading
Legend
E - Emission Point
F - Fugitive Emissions
CS - Captured Emissions
CC - Cyclone Control
BC - Bahouse Control
SC - Scrubber Control
FELMAN PRODUCTION INC.
PROCESS FLOW DIAGRAM
MASON COUNTY, WEST VIRGINIA
FELMAN PRODUCTION, INC.
LETART, WEST VIRGINIA
N.T.S.
06-118-01
ERSG

EQUIPMENT TABLE		
Emission Unit ID	Description	Capacity
EX-1	Extruder Unit	20 TPH
PT-1	Pelletizing Unit	6 TPH
OS-1X	Open Stockpile - Briquettes	Base Area 5,000 ft2
OS-1P	Open Stockpile - Pellets	Base Area 5,000 ft2

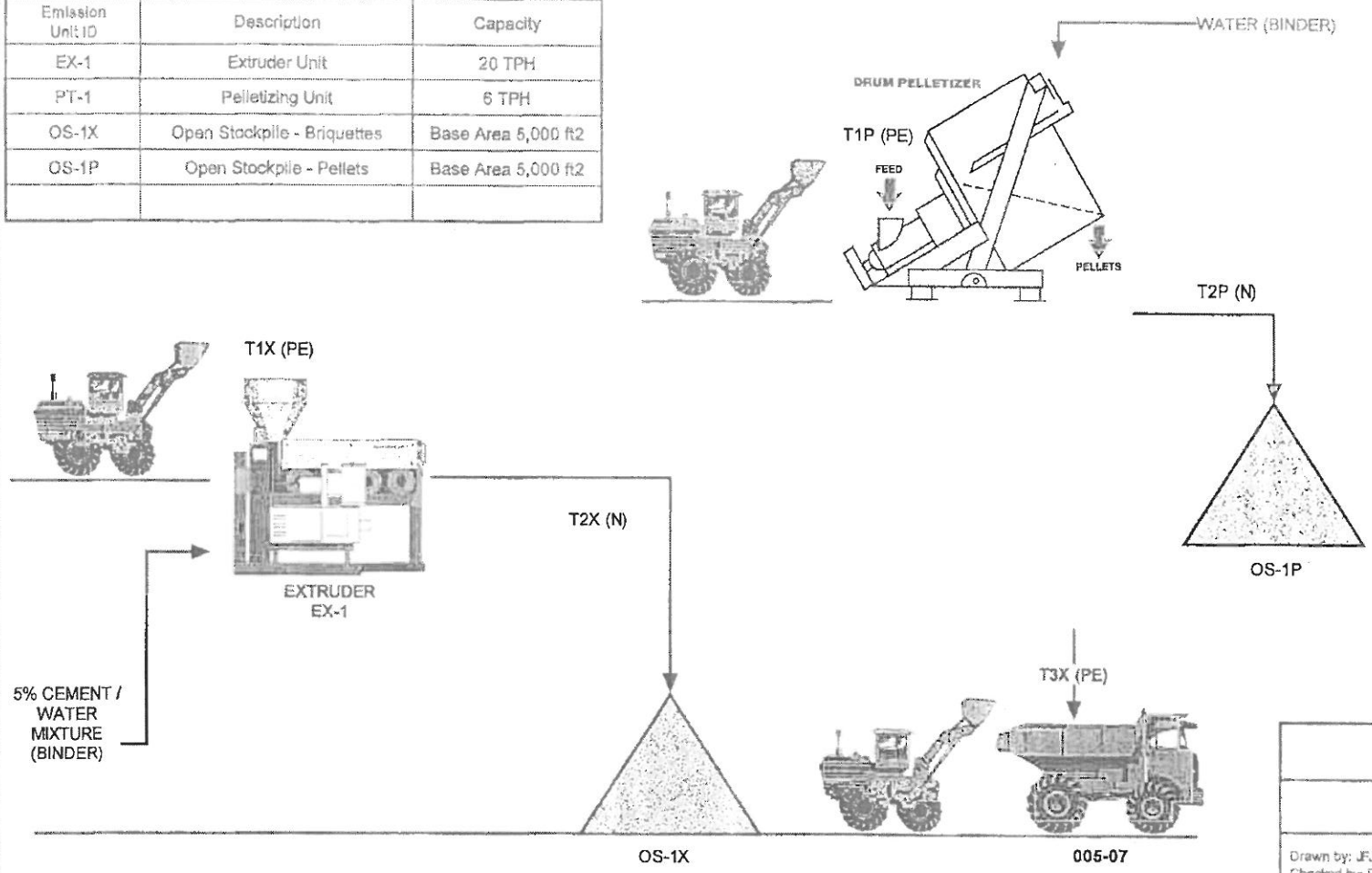

Process Flow Diagram
Extruder-Pelletizing Unit

Felman Production, Inc.
Letart, WV

Drawn by: JFJ
Checked by: RMM

Project No: ERSG 10-128-07
Date: 8-21-2010

ERSG Environmental Regulatory Service Group, Inc.
2303 Roxalana Road, Dunbar, WV 25064 ph. (304) 746-4780

EQUIPMENT TABLE		
Emission Unit ID	Description	Capacity
CR-1C	Jaw Crusher	400 TPH
SC-1C	Grizzly Feeder	400 TPH
BC-1C	Belt Conveyor	400 TPH
BC-2C	Belt Conveyor	400 TPH
EG-1C	Diesel Fired Engine	230 HP @ 1600 RPM
OS-1C	Open Stockpile Undersized	Base Area 5,000 FT2
OS-2C	Open Stockpile Sized	Base Area 5,000 FT2

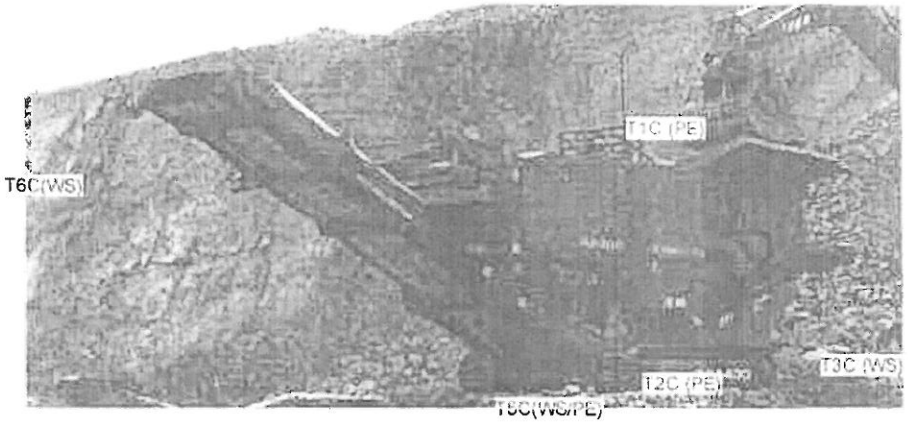

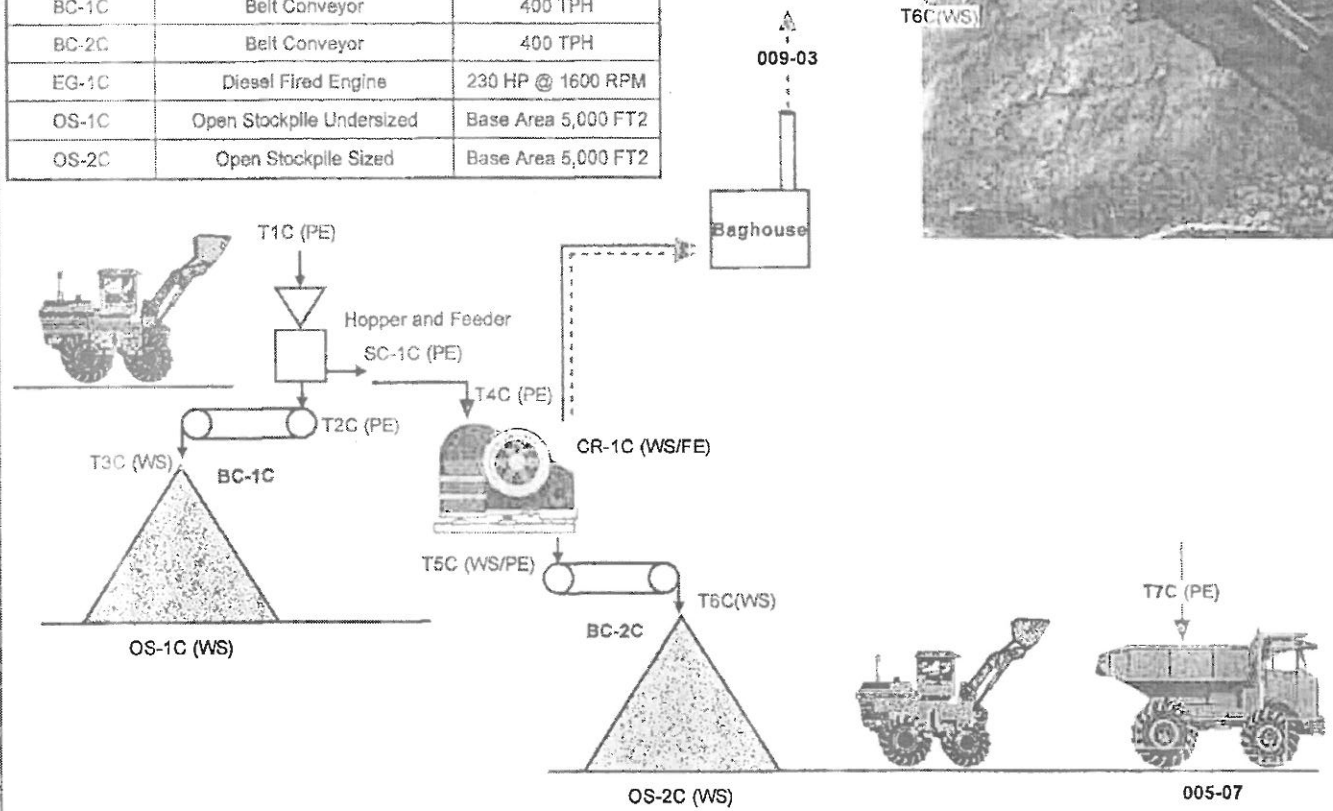

Process Flow Diagram
Portable Crushing Unit

Felman Production, Inc.
Letart, WV

Drawn by: JFJ
Checked by: RMM

Project No: ERSG 10-128-07
Date: 6-21-2010

ERSG Environmental Regulatory Service Group, Inc.
2303 Roxalana Road, Dunbar, WV 25064 ph. (304) 746-4780

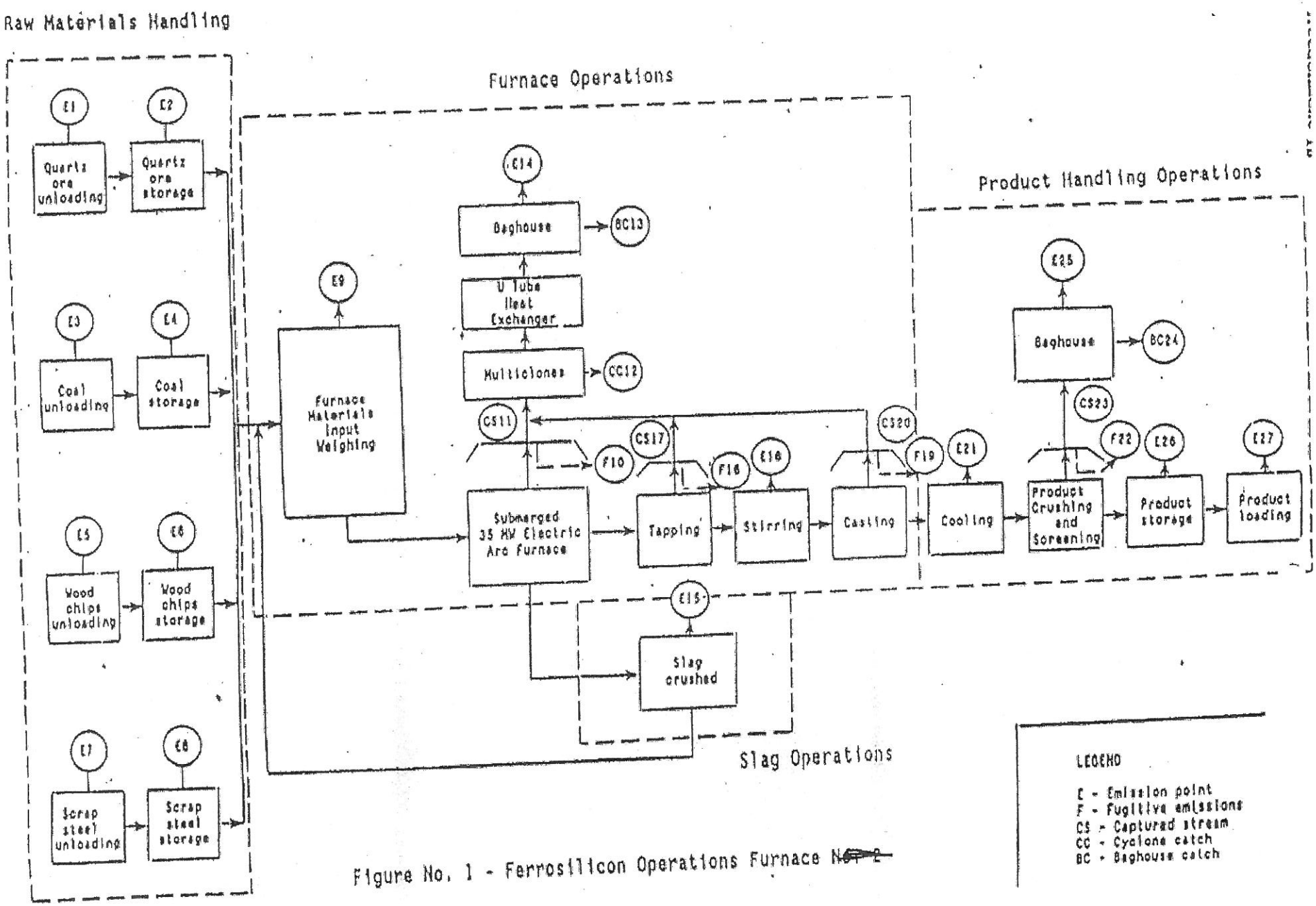

Figure No. 1 - Ferrosilicon Operations Furnace ~~No. 2~~

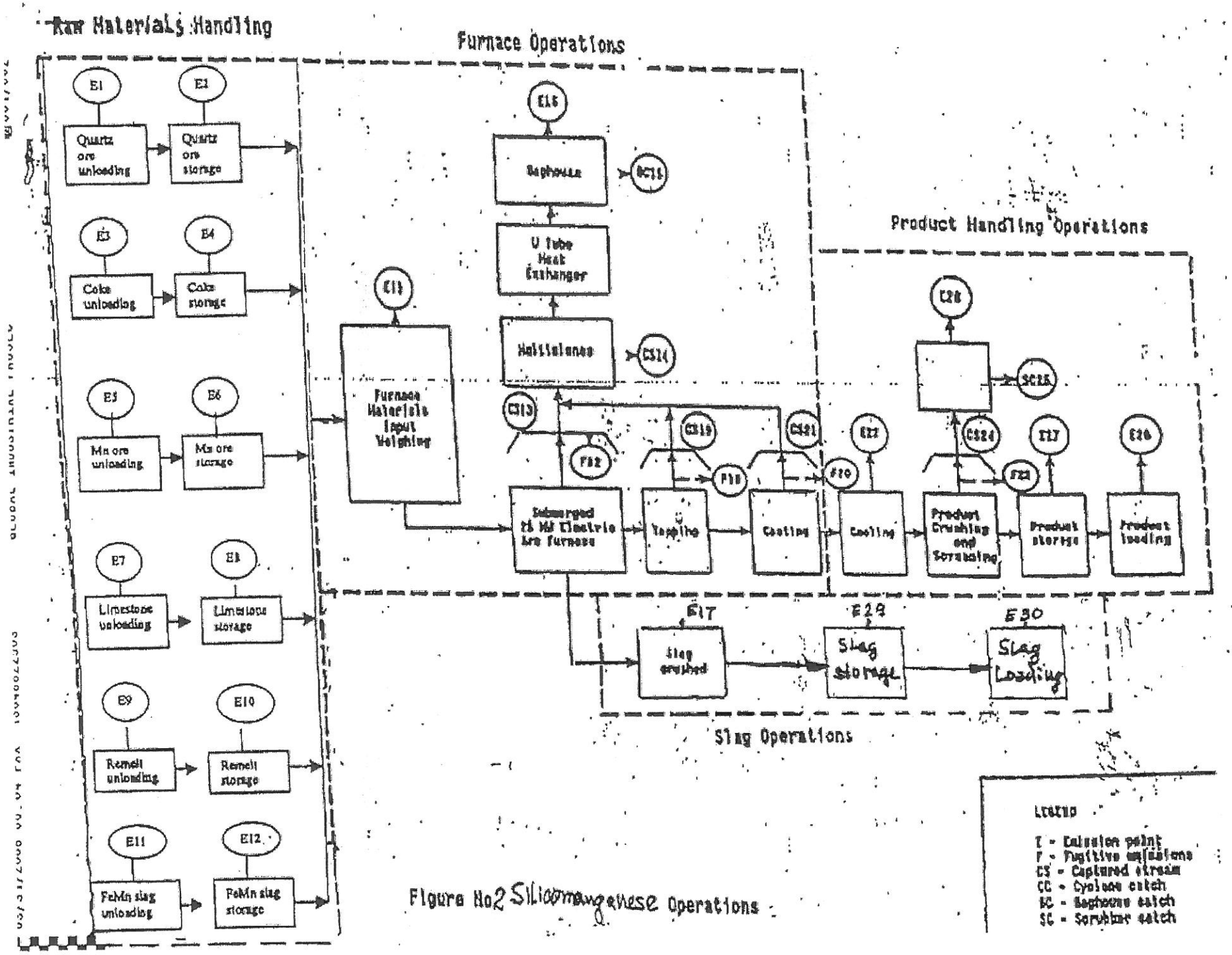

Figure No2 Siliomangenese Operations

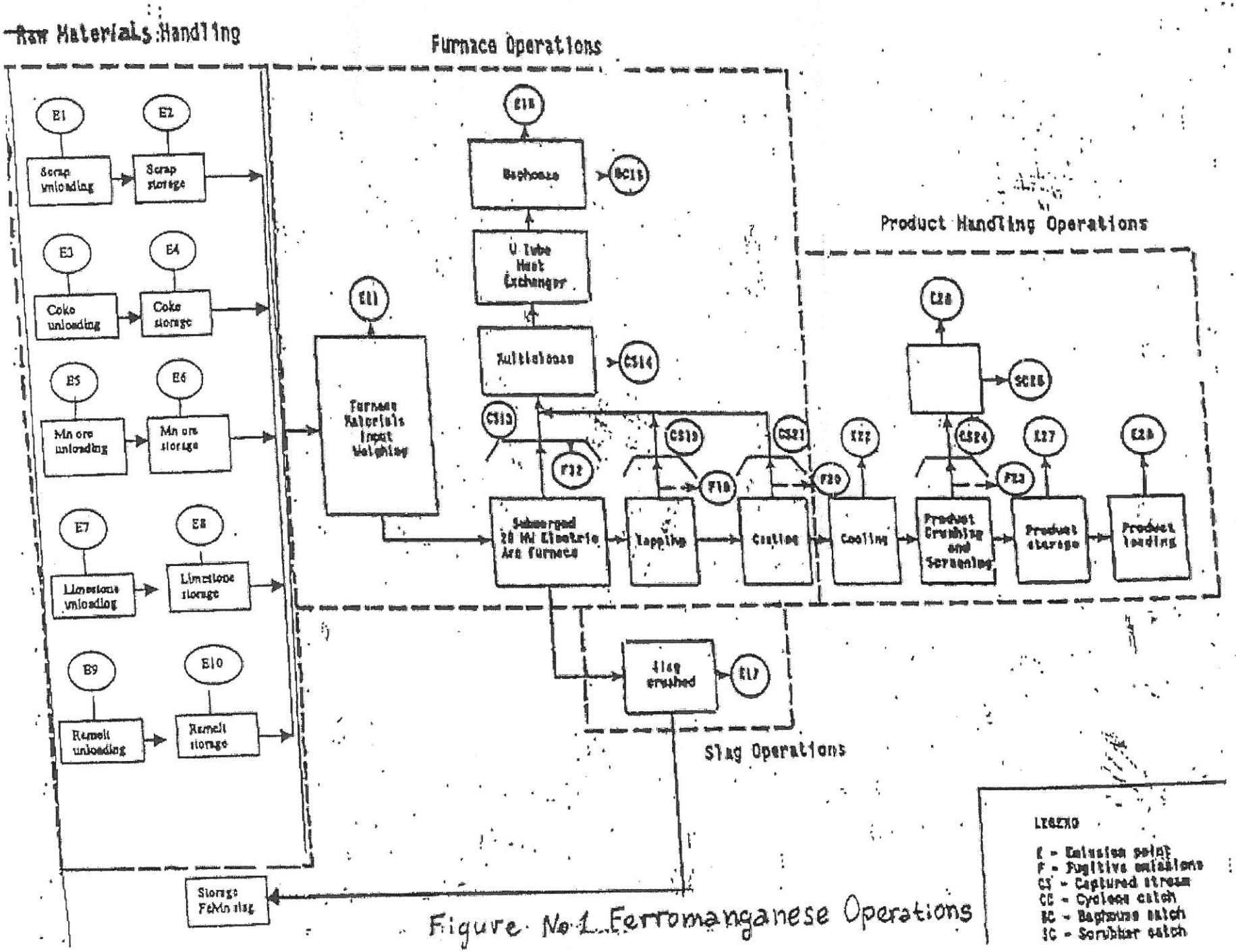

Figure No 1 Ferromanganese Operations

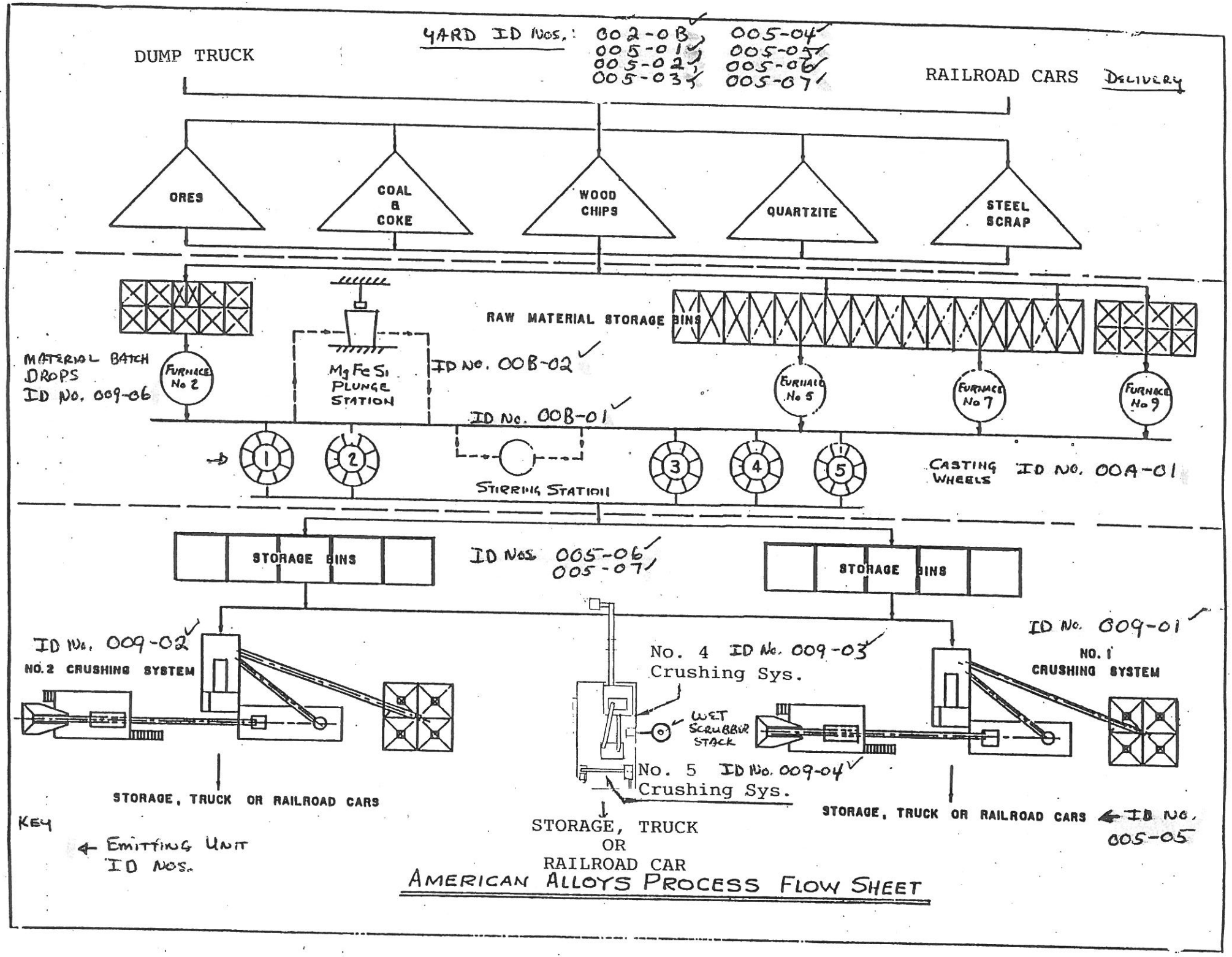

AMERICAN ALLOYS PROCESS FLOW SHEET

ATTACHMENT D
EQUIPMENT TABLE

ATTACHMENT D - Title V Equipment Table

(includes all emission units at the facility except those designated as insignificant activities in Section 4, Item 24 of the General Forms)

Emission Point ID[1]	Control Device[1]	Emission Unit ID[1]	Emission Unit Description	Design Capacity	Year Installed/ Modified
001-01	BH2	001-01	No. 2 Furnace	32 MW	1966
001-02	BH5	001-02	No. 5 Furnace	20 MW	1974
001-03	BH7	001-03	No. 7 Furnace	20 MW	1975
002-0B	NA	002-0B	Outdoor Storage Piles	3 Acres	1952
005-01	NA	005-01	Unpaved Road – Raw Material Delivery	NA	NA
005-02	NA	005-02	Unpaved Road – Gravel Delivery	NA	NA
005-03	NA	005-03	Unpaved Road – Wood Chips Delivery	NA	NA
005-04	NA	005-04	Unpaved Road – Scrap Metal Delivery	NA	NA
005-05	NA	005-05	Unpaved Road – Products Shipments	NA	NA
005-06	NA	005-06	Unpaved Road – Raw Material Transfer	NA	NA
005-07	NA	005-07	Unpaved Road – Endloaders	NA	NA
009-01	BH	009-01	Crushing and Screening System #1	33 TPH	NA
009-02	BH	009-02	Crushing and Screening System #2	33 TPH	NA
009-03	BH	009-03	Crushing and Screening System #4	20 TPH	NA
009-04	BH	009-04	Crushing and Screening System #5	20 TPH	NA
009-06	NA	009-06	Transfer Points	28 TPH	NA
00A-01	BH	00A-01	Product Casting Operations	20 TPH	NA
00C-01	NA	00C-01	Ladle Burners (Two Systems)	140 MMBtu	NA
SC-1C, T3C, 009-03, T6C, 05-1CE, and OS-2CE	Various	SC-1E, BC-1C, CR-1C, BC-2C, 0S-1C, and 0S-2C	Portable Screener/Crusher and Stockpiles	400 TPH	Proposed
EX-01E and 05-1X	NA	EX-01 and 05-1X	Extruder Unit and Stockpile	20 TPH	Proposed
PT-1E and OS-1PE	FE/N	PT-1 and OS-1P	Peletizer Unit and Stockpile	6 TPH	2010

[1]For 45CSR13 permitted sources, the numbering system used for the emission points, control devices, and emission units should be consistent with the numbering system used in the 45CSR13 permit. For grandfathered sources, the numbering system should be consistent with registrations or emissions inventory previously submitted to DAQ. For emission points, control devices, and emissions units which have not been previously labeled, use the following 45CSR13 numbering system: 1S, 2S, 3S,... or other appropriate description for emission units; 1C, 2C, 3C,... or other appropriate designation for control devices; 1E, 2E, 3E, ... or other appropriate designation for emission points.

ATTACHMENT E
EMISSION UNIT FORMS

ATTACHMENT E - Emission Unit Form

Emission Unit Description

Emission unit ID number:	**Emission unit name:**	**List any control devices associated with this emission unit:**
001-01	No. 2 Furnace	No. 2 Baghouse

Provide a description of the emission unit (type, method of operation, design parameters, etc.):
This is a submerged electric arc furnace used in the production of 75% FeSi ferroalloy which operates continuously. Raw materials are added to the furnace at regular intervals. Emissions from this unit are controlled by the No. 2 Baghouse.

Manufacturer:	**Model number:**	**Serial number:**
Elkem	NA	NA
Construction date:	**Installation date:**	**Modification date(s):**
1966	1966	NA

Design Capacity (examples: furnaces - tons/hr, tanks - gallons): 32 MW

Maximum Hourly Throughput:	**Maximum Annual Throughput:**	**Maximum Operating Schedule:**
10.1 tph Production Rate	88,476 (10.1 tph x 8,760 hr/yr) Production Rate	8,760 hr/yr

Fuel Usage Data **(fill out all applicable fields)**

Does this emission unit combust fuel? ___Yes _X_ No	**If yes, is it?** ___ Indirect Fired ___Direct Fired
Maximum design heat input and/or maximum horsepower rating:	**Type and Btu/hr rating of burners:**

List the primary fuel type(s) and if applicable, the secondary fuel type(s). For each fuel type listed, provide the maximum hourly and annual fuel usage for each.

Describe each fuel expected to be used during the term of the permit.

Fuel Type	Max. Sulfur Content	Max. Ash Content	BTU Value

Emissions Data		
Criteria Pollutants	Potential Emissions	
	PPH	TPY
Carbon Monoxide (CO)	96.10	420.93
Nitrogen Oxides (NO_X)	1.64	7.19
Lead (Pb)	0.000007	0.00003
Particulate Matter ($PM_{2.5}$)	4.73	20.75
Particulate Matter (PM_{10})	4.73	20.75
Total Particulate Matter (TSP)	4.73	20.75
Sulfur Dioxide (SO_2)	243.46	1,067.78
Volatile Organic Compounds (VOC)	51.30	255.01
Hazardous Air Pollutants	Potential Emissions	
	PPH	TPY
Arsenic	0.00071	0.00031
Cadmium	0.00071	0.00031
Chromium	0.03	0.13
Manganese	0.08	0.34
Mercury	0.0012	0.0052
Nickel	0.02	0.08
Selenium	0.000071	0.00031
Regulated Pollutants other than Criteria and HAP	Potential Emissions	
	PPH	TPY

List the method(s) used to calculate the potential emissions (include dates of any stack tests conducted, versions of software used, source and dates of emission factors, etc.).

CO – No published emission factor for CO was found. AP-42 indicates that all CO reacts above the furnace to form CO2. CO estimated from stack test results of 58.32 pph with a 20% buffer and production ratio of 1.37 based on actual operating rate of 7.355 tph during testing and yearly operation of 8,760 hrs/year which results in 96.10 pph and 420.93 tpy.

NOx – No emission factor for NOx from ferroalloy furnaces were found. Emission factor was obtained from AP-42, 4th Edition, Table 7.13-1 for electric arc furnaces used in steel foundries.

Total particulate matter emission factor = 344 lb/ton. Lead in baghouse dust = 25 ppm. Therefore, emission factor = 344 lb PM/ton x 0.000025 lb Pb/lb PM = 0.000160 lb/ton.

PM10 and PM2.5 – Conservatively assume all PM is PM10 and PM2.5.

TSP – AP42

List the method(s) used to calculate the potential emissions (include dates of any stack tests conducted, versions of software used, source and dates of emission factors, etc.).

SO2 – Emissions based on material balance.
Assume 97% of sulfur furnace exits to air as SO2.

Coal used = 57,355,700 lb/yr, Avg. %S (by wt) = 0.76%, SO2 emissions = 422.8 ton/yr
Charcoal used = 0 lb/yr, Avg. %S (by wt) = 0.10%, SO2 emissions = o ton/yr
Coke used = 1,120,780 lb/yr, Avg. %S (by wt) = 0.85%, SO2 emissions = 9.2 ton/yr
Total SO2 emissions = 432.0 ton/yr

VOC – AP42

Total particulate matter emission factor = 344 lb/ton. Arsenic in baghouse dust = 5 ppm. Therefore, emission factor = 344 lb PM/ton x 0.000005 lb As/lb PM = 0.001720 lb/ton.

Total particulate matter emission factor = 344 lb/ton. Cadmium in baghouse dust = 5 ppm. Therefore, emission factor = 344 lb PM/ton x 0.000005 lb CD/lb PM = 0.001720 lb/ton.

Total particulate matter emission factor = 344 lb/ton. Chromium in baghouse dust = 2000 ppm. Therefore, emission factor = 344 lb PM/ton x 0.002000 lb CR/lb PM = 0.688000 lb/ton.

Total particulate matter emission factor = 344 lb/ton. Manganese in baghouse dust = 5500 ppm. Therefore, emission factor = 344 lb PM/ton x 0.005500 lb Mn/lb PM = 1.892000 lb/ton.

Total particulate matter emission factor = 344 lb/ton. Mercury in baghouse dust = 250 ppm. Therefore, emission factor = 344 lb PM/ton x 0.000005 lb Hg/lb PM = 0.086000 lb/ton.

Total particulate matter emission factor = 344 lb/ton. Nickel in baghouse dust = 1300 ppm. Therefore, emission factor = 344 lb PM/ton x 0.001300 lb Ni/lb PM = 0.447200 lb/ton.

Total particulate matter emission factor = 344 lb/ton. Selenium in baghouse dust = 5 ppm. Therefore, emission factor = 344 lb PM/ton x 0.000005 lb As/lb PM = 0.001720 lb/ton.

Applicable Requirements

List all applicable requirements for this emission unit. For each applicable requirement, include the underlying rule/regulation citation and/or construction permit with the condition number. (*Note: Title V permit condition numbers alone are not the underlying applicable requirements*). If an emission limit is calculated based on the type of source and design capacity or if a standard is based on a design parameter, this information should also be included.

See Pages 13 to 18

_X_ Permit Shield

For all applicable requirements listed above, provide monitoring/testing/recordkeeping/reporting which shall be used to demonstrate compliance. If the method is based on a permit or rule, include the condition number or citation. (Note: Each requirement listed above must have an associated method of demonstrating compliance. If there is not already a required method in place, then a method must be proposed.)

See Pages 19 to 21

Are you in compliance with all applicable requirements for this emission unit? _X_ Yes ___No

If no, complete the **Schedule of Compliance Form** as **ATTACHMENT F**.

ATTACHMENT E - Emission Unit Form

Emission Unit Description

Emission unit ID number:	**Emission unit name:**	**List any control devices associated with this emission unit:**
001-02	No. 5 Furnace	No. 5 Baghouse

Provide a description of the emission unit (type, method of operation, design parameters, etc.):
This is a submerged electric arc furnace used in the production of 75% FeSi ferroalloy which operates continuously. Raw materials are added to the furnace at regular intervals. Emissions from this unit are controlled by the No. 5 Baghouse.

Manufacturer:	**Model number:**	**Serial number:**
Lectromelt	NA	NA
Construction date:	**Installation date:**	**Modification date(s):**
1974	1974	NA

Design Capacity (examples: furnaces - tons/hr, tanks - gallons): 20 MW

Maximum Hourly Throughput:	**Maximum Annual Throughput:**	**Maximum Operating Schedule:**
5.0 tph Production Rate	43,800 (5 tph x 8,760 hr/yr) Production Rate	8,760 hr/yr

Fuel Usage Data **(fill out all applicable fields)**

Does this emission unit combust fuel? ___Yes __X__ No	**If yes, is it?** ___ Indirect Fired ___Direct Fired
Maximum design heat input and/or maximum horsepower rating:	**Type and Btu/hr rating of burners:**

List the primary fuel type(s) and if applicable, the secondary fuel type(s). For each fuel type listed, provide the maximum hourly and annual fuel usage for each.

Describe each fuel expected to be used during the term of the permit.

Fuel Type	Max. Sulfur Content	Max. Ash Content	BTU Value

Emissions Data		
Criteria Pollutants	Potential Emissions	
	PPH	TPY
Carbon Monoxide (CO)	82.17	359.90
Nitrogen Oxides (NO_X)	0.84	3.68
Lead (Pb)	0.00012	0.00052
Particulate Matter ($PM_{2.5}$)	4.73	20.75
Particulate Matter (PM_{10})	4.73	20.75
Total Particulate Matter (TSP)	4.73	20.75
Sulfur Dioxide (SO_2)	89.44	391.72
Volatile Organic Compounds (VOC)	18.46	80.85
Hazardous Air Pollutants	Potential Emissions	
	PPH	TPY
Arsenic	0.00003	0.00012
Cadmium	0.00003	0.00012
Chromium	0.01	0.05
Manganese	0.03	0.12
Mercury	0.0012	0.0052
Nickel	0.0062	0.027
Selenium	0.00003	0.00012
Regulated Pollutants other than Criteria and HAP	Potential Emissions	
	PPH	TPY

List the method(s) used to calculate the potential emissions (include dates of any stack tests conducted, versions of software used, source and dates of emission factors, etc.).

CO – No published emission factor for CO was found. AP-42 indicates that all CO reacts above the furnace to form CO2. CO estimated from stack test result of 74.7 pph with a 10% buffer and yearly operation of 8,760 hrs/year which results in 82.17 pph and 359.90 tpy.

NOx – No emission factor for NOx from ferroalloy furnaces were found. Emission factor was obtained from AP-42, 4th Edition, Table 7.13-1 for electric arc furnaces used in steel foundries.

Lead – Emission factor based on stack test results which indicate 4.1 lb/hr (controlled) of particulate matter. Emission factor was derived using actual production data for this furnace (8183 hr/yr operation, 28750 ton/yr alloy produced) and includes emissions from product casting. Lead in baghouse dust = 25 ppm. Therefore, emissions = 1.1277 lb PM/ton x 0.000025 lb PB/lb PM = 0.000028 lb/ton.

PM10 and PM2.5 – Emission factor based on stack test results which indicate 4.1 lb/hr (controlled) of particulate matter. Emission factor was derived using actual production data for this furnace (8183 hr/yr operation, 28750 ton/yr alloy produced) and includes emissions from product casting. Conservatively assume all PM is PM10 and PM2.5.

TSP – Emission factor based on stack test results which indicate 4.1 lb/hr (controlled) of particulate matter.

Emission factor was derived using actual production data for this furnace (8183 hr/yr operation, 28750 ton/yr alloy produced) and includes emissions from product casting.

List the method(s) used to calculate the potential emissions (include dates of any stack tests conducted, versions of software used, source and dates of emission factors, etc.).

SO2 – Assume 97% of sulfur furnace exits to air as SO2.
Coal used = 42,451,038 lb/yr, Avg. %S (by wt) = 0.76%, SO2 emissions = 312.9 ton/yr
Charcoal used = 0 lb/yr, Avg. %S (by wt) = 0.10%, SO2 emissions = 0 ton/yr
Coke used = 465,154 lb/yr, Avg. %S (by wt) = 0.85%, SO2 emissions = 3.8 ton/yr
Total SO2 emissions = 316.7 ton/yr
VOC – AP42
Arsenic – Emission factor based on stack test results which indicate 4.1 lb/hr (controlled) of particulate matter. Emission factor was derived using actual production data for this furnace (8183 hr/yr operation, 28750 ton/yr alloy produced) and includes emissions from product casting. Arsenic in baghouse dust = 5 ppm. Therefore, emissions = 1.1277 lb PM/ton x 0.000005 lb As/lb PM = 0.000006 lb/ton.

Cadmium – Emission factor based on stack test results which indicate 4.1 lb/hr (controlled) of particulate matter. Emission factor was derived using actual production data for this furnace (8183 hr/yr operation, 28750 ton/yr alloy produced) and includes emissions from product casting. Cadmium in baghouse dust = 5 ppm. Therefore, emissions = 1.1277 lb PM/ton x 0.000005 lb Cd/lb PM = 0.000006 lb/ton.

Chromium – Emission factor based on stack test results which indicate 4.1 lb/hr (controlled) of particulate matter. Emission factor was derived using actual production data for this furnace (8183 hr/yr operation, 28750 ton/yr alloy produced) and includes emissions from product casting. Chromium in baghouse dust = 2000 ppm. Therefore, emissions = 1.1277 lb PM/ton x 0.002255 lb Cr/lb PM = 0.002255 lb/ton.

Manganese – Emission factor based on stack test results which indicate 4.1 lb/hr (controlled) of particulate matter. Emission factor was derived using actual production data for this furnace (8183 hr/yr operation, 28750 ton/yr alloy produced) and includes emissions from product casting. Manganese in baghouse dust = 5500 ppm. Therefore, emissions = 1.1277 lb PM/ton x 0.005500 lb Mn/lb PM = 0.006202 lb/ton.

Mercury – Emission factor based on stack test results which indicate 4.1 lb/hr (controlled) of particulate matter. Emission factor was derived using actual production data for this furnace (8183 hr/yr operation, 28750 ton/yr alloy produced) and includes emissions from product casting. Mercury in baghouse dust = 250 ppm. Therefore, emissions = 1.1277 lb PM/ton x 0.000250 lb Hg/lb PM = 0.000282 lb/ton.

Nickel - Emission factor based on stack test results which indicate 4.1 lb/hr (controlled) of particulate matter. Emission factor was derived using actual production data for this furnace (8183 hr/yr operation, 28750 ton/yr alloy produced) and includes emissions from product casting. Nickel in baghouse dust = 1300 ppm. Therefore, emissions = 1.1277 lb PM/ton x 0.001300 Ni/lb PM = 0.001466 lb/ton.

Selenium - Emission factor based on stack test results which indicate 4.1 lb/hr (controlled) of particulate matter. Emission factor was derived using actual production data for this furnace (8183 hr/yr operation, 28750 ton/yr alloy produced) and includes emissions from product casting. Selenium in baghouse dust = 5 ppm. Therefore, emissions = 1.1277 lb PM/ton x 0.000005 lb Se/lb PM = 0.000006 lb/ton.

Applicable Requirements
List all applicable requirements for this emission unit. For each applicable requirement, include the underlying rule/regulation citation and/or <u>construction permit</u> with the condition number. (*Note: Title V permit condition numbers alone are not the underlying applicable requirements*). If an emission limit is calculated based on the type of source and design capacity or if a standard is based on a design parameter, this information should also be included. See Pages 13 to 18
__X__ Permit Shield
For all applicable requirements listed above, provide monitoring/testing/recordkeeping/reporting which shall be used to demonstrate compliance. If the method is based on a permit or rule, include the condition number or citation. (Note: Each requirement listed above must have an associated method of demonstrating compliance. If there is not already a required method in place, then a method must be proposed.) See Pages 19 to 21
Are you in compliance with all applicable requirements for this emission unit? __X__ Yes ___No If no, complete the **Schedule of Compliance Form** as **ATTACHMENT F**.

ATTACHMENT E - Emission Unit Form

Emission Unit Description

Emission unit ID number:	**Emission unit name:**	**List any control devices associated with this emission unit:**
001-03	No. 7 Furnace	No. 7 Baghouse

Provide a description of the emission unit (type, method of operation, design parameters, etc.):
This is a submerged electric arc furnace used in the production of either 50% or 75% FeSi ferroalloy which operates continuously. Raw materials are added to the furnace at regular intervals. Emissions from this unit are controlled by the No. 7 Baghouse.

Manufacturer:	**Model number:**	**Serial number:**
Lectromelt	NA	NA
Construction date:	**Installation date:**	**Modification date(s):**
01/01/1976	01/01/1976	MM/DD/YYYY

Design Capacity (examples: furnaces - tons/hr, tanks - gallons): 20 MW

Maximum Hourly Throughput:	**Maximum Annual Throughput:**	**Maximum Operating Schedule:**
5.0 tph Production Rate	43,800 tpy (5.0 tph x 8,760 hr/yr) Production Rate	8,760 hr/yr

Fuel Usage Data **(fill out all applicable fields)**

Does this emission unit combust fuel? ___Yes _X_ No	**If yes, is it?** ___ Indirect Fired ___Direct Fired
Maximum design heat input and/or maximum horsepower rating:	**Type and Btu/hr rating of burners:**

List the primary fuel type(s) and if applicable, the secondary fuel type(s). For each fuel type listed, provide the maximum hourly and annual fuel usage for each.

Describe each fuel expected to be used during the term of the permit.

Fuel Type	Max. Sulfur Content	Max. Ash Content	BTU Value

Emissions Data		
Criteria Pollutants	Potential Emissions	
	PPH	TPY
Carbon Monoxide (CO)	83.38	365.20
Nitrogen Oxides (NO_X)	0.84	3.68
Lead (Pb)	0.00026	0.0012
Particulate Matter ($PM_{2.5}$)	10.06	44.06
Particulate Matter (PM_{10})	10.06	44.06
Total Particulate Matter (TSP)	10.06	44.06
Sulfur Dioxide (SO_2)	111.93	490.24
Volatile Organic Compounds (VOC)	24.15	105.78
Hazardous Air Pollutants	Potential Emissions	
	PPH	TPY
Arsenic	0.00005	0.00022
Cadmium	0.00005	0.00022
Chromium	0.02	0.09
Manganese	0.06	0.25
Mercury	0.0026	0.011
Nickel	0.013	0.058
Selenium	0.00005	0.00022
Regulated Pollutants other than Criteria and HAP	Potential Emissions	
	PPH	TPY

List the method(s) used to calculate the potential emissions (include dates of any stack tests conducted, versions of software used, source and dates of emission factors, etc.).

CO – No published emission factor for CO was found. AP-42 indicates that all CO reacts above the furnace to form CO2. CO estimated from stack test result of 75.8 pph with a 10% buffer and yearly operation of 8,760 hrs/year which result in 83.38 pph and 365.20 tpy.

NOx - No emission factor for NOx from ferroalloy furnaces were found. Emission factor was obtained from AP-42, 4th Edition, Table 7.13-1 for electric arc furnaces used in steel foundries.

Lead – Emission factor based on stack test results which indicate 6.6 lb/hr (controlled) of particulate matter. Emission factor was derived using actual production data for this furnace (8181 hr/yr operation, 22550 ton/yr alloy produced) and includes emissions from product casting. Lead in baghouse dust = 0.000025 ppm. Therefore, 2.395 lb PM/ton x 0.000025 lb Pb/lb PM = 0.000060 lb/ton.

List the method(s) used to calculate the potential emissions (include dates of any stack tests conducted, versions of software used, source and dates of emission factors, etc.).

PM10 and PM2.5 – Emission factor based on stack test results which indicate 6.6 lb/hr (controlled) of particulate matter. Emission factor was derived using actual production data for this furnace (8181 hr/yr operation, 22550 ton/yr alloy produced) and includes emissions from product casting. Conservatively assume all PM is PM10 and PM2.5.

TSP – Emission factor based on stack test results which indicate 6.6 lb/hr (controlled) of particulate matter. Emission factor was derived using actual production data for this furnace (8181 hr/yr operation, 22550 ton/yr alloy produced) and includes emissions from product casting.

SO2 – Assume 97% of sulfur present in coal is emitted to the air as SO2.
Coal used = 40,234,948 lb/yr, Avg. %S (by wt) = 0.76%, SO2 emissions from coal – 296.6 ton/yr
Charcoal used = 0 lb/yr, Avg. %S (by wt) = 0.10%, SO2 emissions = 0 ton/yr
Coke used = 461,841 lb/yr, Avg. 5S (by wt) = 0.85%, SO2 emissions = 3.8 ton/yr
Total SO2 emissions = 300.4 ton/yr
VOC – AP42

Arsenic – Emission factor based on stack test results which indicate 6.6 lb/hr (controlled) of particulate matter. Emission factor was derived using actual production data for this furnace (8181 hr/yr operation, 22550 ton/yr alloy produced) and includes emissions from product casting. Emissions from Arsenic = 2.395 lb PM/ton x 0.000005 lb As/lb PM = 0.000012 lb As/ton.

Cadmium – Emission factor based on stack test results which indicate 6.6 lb/hr (controlled) of particulate matter. Emission factor was derived using actual production data for this furnace (8181 hr/yr operation, 22550 ton/yr alloy produced) and includes emissions from product casting. Emissions from Cadmium = 2.395 lb PM/ton x 0.000005 lb Cd/lb PM = 0.000012 lb Cd/ton.

Chromium - Emission factor based on stack test results which indicate 6.6 lb/hr (controlled) of particulate matter. Emission factor was derived using actual production data for this furnace (8181 hr/yr operation, 22550 ton/yr alloy produced) and includes emissions from product casting. Emissions from Chromium = 2.395 lb PM/ton x 0.002000 lb Cr/lb PM = 0.004790 Cr/ton.

Manganese - Emission factor based on stack test results which indicate 6.6 lb/hr (controlled) of particulate matter. Emission factor was derived using actual production data for this furnace (8181 hr/yr operation, 22550 ton/yr alloy produced) and includes emissions from product casting. Emissions from Manganese = 2.395 lb PM/ton x 0.005500 lb Mn/lb PM = 0.013173 lb Mn/ton.

Mercury - Emission factor based on stack test results which indicate 6.6 lb/hr (controlled) of particulate matter. Emission factor was derived using actual production data for this furnace (8181 hr/yr operation, 22550 ton/yr alloy produced) and includes emissions from product casting. Emissions from Mercury = 2.395 lb PM/ton x 0.000250 lb Hg/lb PM = 0.000599 lb Hg/ton.

Nickel – Emission factor based on stack test results which indicate 6.6 lb/hr (controlled) of particulate matter. Emission factor was derived using actual production data for this furnace (8181 hr/yr operation, 22550 ton/yr alloy produced) and includes emissions from product casting. Emissions from Nickel = 2.395 lb PM/ton x 0.001300 lb Ni/lb PM = 0.003114 lb Ni/ton.

Selenium - Emission factor based on stack test results which indicate 6.6 lb/hr (controlled) of particulate matter. Emission factor was derived using actual production data for this furnace (8181 hr/yr operation, 22550 ton/yr alloy produced) and includes emissions from product casting. Emissions from Selenium = 2.395 lb PM/ton x 0.002000 lb Se/lb PM = 0.004790 lb Se/ton.

Applicable Requirements
List all applicable requirements for this emission unit. For each applicable requirement, include the underlying rule/regulation citation and/or <u>construction permit</u> with the condition number. (*Note: Title V permit condition numbers alone are not the underlying applicable requirements*). If an emission limit is calculated based on the type of source and design capacity or if a standard is based on a design parameter, this information should also be included. See Pages 13 to 18
_X_ Permit Shield
For all applicable requirements listed above, provide monitoring/testing/recordkeeping/reporting which shall be used to demonstrate compliance. If the method is based on a permit or rule, include the condition number or citation. (Note: Each requirement listed above must have an associated method of demonstrating compliance. If there is not already a required method in place, then a method must be proposed.) See Pages 19 to 21
Are you in compliance with all applicable requirements for this emission unit? _X_ Yes ___No If no, complete the **Schedule of Compliance Form** as **ATTACHMENT F**.

List all applicable requirements for this emission unit. For each applicable requirement, include the underlying rule/regulation citation and/or <u>construction permit</u> with the condition number. (*Note: Title V permit condition numbers alone are not the underlying applicable requirements*). If an emission limit is calculated based on the type of source and design capacity or if a standard is based on a design parameter, this information should also be included.

No.	Rule/ Regulation/ R13 Permit	Existing R30 Permit Condition	Name	Requirement
1	45CSR§§7-3.1 and 3.2 40CFR§3.1653, and 45CSR34	4.1.1	Opacity	No person shall cause, suffer, allow or permit emission of smoke and/or particulate matter into the open air from any process source operation which is greater than twenty (20) percent opacity, except for smoke and/or particulate matter emitted from any process source operation which is less than forty (40) percent opacity for any period or periods aggregating no more than five (5) minutes in any sixty (60) minute period. Compliance with this limit shall demonstrate compliance with the less stringent limitation of 40 CFR §63.1653.
2	45CSR§§7-4.3.	4.1.2	Dilution Prohibition	No person shall circumvent the provisions of 45CSR7 by adding additional gas to any exhaust or group of exhausts for the purpose of reducing the stack gas concentration.
3	45CSR§7-4.7.a..	4.1.3	Regulation 7 Exemption	Type 'b' duplicate source operations whose air pollution control equipment efficiency is a minimum of ninety-nine percent (99%) by weight and whose total process weight rate is less than two hundred fifty thousand (250,000) pounds per hour shall be exempted from the requirements of 45CSR§7-4.1 provided that smoke emitted into the open air from any such duplicate source operation is less than twenty percent (20%) opacity.
4	45CSR§7-4.12.	4.1.4.	Stack Requirement	Any stack serving any process source operation or air pollution control equipment on any process source operation shall contain flow straightening devices or a vertical run of sufficient length to establish flow patterns consistent with acceptable stack sampling procedures.
5	45CSR§7-4.13.	4.1.5.	HAP	Potential Hazardous Material Emissions—Persons responsible for manufacturing processing source operations from which hazardous particulate matter material may be emitted such as, but not limited to, lead, arsenic, beryllium and other such materials shall give the utmost care and consideration to the potential harmful effects of the emissions resulting from such activities. Evaluations of these facilities as to adequacy, efficiency and emission potential will be made on an individual basis by the Director working in conjunction with other appropriate governmental agencies.
6	45CSR§7-5.1	4.1.6.	Minimization of Fugitive PM	No person shall cause, suffer, allow or permit any manufacturing process generating fugitive particulate matter to operate that is not equipped with a system, which may include, but not be limited to, process equipment design, control equipment design or operation and maintenance procedures, to minimize the emissions of fugitive particulate matter. To minimize means such system shall be installed, maintained and operated to ensure the lowest fugitive particulate matter emissions reasonably achievable.
7	45CSR§7-5.3., 40 CFR§63.1653(b), and 45CSR34	4.1.7.	4.1.1. and 4.1.6. Exclusions	Sections 4.1.1. and 4.1.6. of this permit shall not apply to particulate matter emitted from the operation of an existing ferroalloy electric submerged arc furnace during blowing taphole events, poling and oxygen lancing operations. Poling emissions shall not exceed five (5) minutes in duration during any poling operation. Compliance with this limit shall demonstrate compliance with the less stringent limitation of 40CFR§63.1653(b).
8	45CSR§10-4.1.	4.1.8.	Sulfur Dioxide Limit	No person shall cause, suffer, allow or permit the emission into the open air from any source operation an in-stack sulfur dioxide concentration exceeding 2,000 parts per million by volume from existing source operations, except as provided in subdivisions 4.1.a through 4.1.e. of 45CSR10.
9	CO-R7-E-2004-13, Condition III.4.	4.1.9.	40 CFR63, XXX	Within ninety (90) days after startup of any furnace, the company shall be in compliance with all provisions set forth in 40CFR Part 63, Subpart XXX – National Emission Standards for Ferromanganese and Silicomanganese Production.
10	CO-R7-E-2004-13, Condition III.10.	4.1.10.	Furnace 9 Restart	Prior to restarting Furnace #9, the company shall apply for and obtain a Rule 13 permit.

List all applicable requirements for this emission unit. For each applicable requirement, include the underlying rule/regulation citation and/or <u>construction permit</u> with the condition number. (*Note: Title V permit condition numbers alone are not the underlying applicable requirements*). If an emission limit is calculated based on the type of source and design capacity or if a standard is based on a design parameter, this information should also be included.

No.	Rule/ Regulation/ R13 Permit	Existing R30 Permit Condition	Name	Requirement
11	40CFR§63.1652(b) and 45CSR34	4.1.11.	PM Limits	No owner or operator shall cause to be discharged into the atmosphere from any existing open submerged arc furnace exhaust gases (including primary and tapping) containing particulate matter in excess of the following: Emission Unit ID 001-01; Furnace ID No. 2; Ferromanganese Production 29.8; Silicomanganese Production 35.9 Emission Unit ID 001-02; Furnace ID No. 5; Ferromanganese Production 21.7; Silicomanganese Production 27.2 Emission Unit ID 001-03; Furnace ID No. 7; Ferromanganese Production 21.7; Silicomanganese Production 27.2
12	CO-R7-95-13, Conditions 7.b.1.A. and B. and 40CFR§63.1652(b) and 45CSR34	4.2.1.	Visible Emissions	The permittee shall conduct visual emission (VE) observations in accordance with Sections 3.2.1. and 3.2.2. of this permit. a. Visible emissions observations on the No. 5 and No. 7 furnace baghouse are not required during any shift in which proper observer location cannot be achieved; b. For each incident during daylight hours where any furnace by-pass cap is opened, regardless of furnace power input or operations status, VE observations shall be initiated no later than ten (10) minutes form the time such by-pass caps are opened and shall continue for at least four (4) hours, until such time as the by-pass caps are closed, or VE observations of the by-pass cap are 10% or less for at least ten minutes, whichever occurs first.
13	CO-R7-95-13, Condition 7.b.4. and 40CFR§63.1657(a)(2)(i). and 45CSR34	4.2.2.	Recording	The permittee shall continue to calibrate, maintain, and operate instrumentation to continuously monitor and record the following: a. Power input to each furnace b. Current or power input and winding temperature for each furnace baghouse fan motor. c. Pressure drop across each furnace baghouse fan. Compliance with this limit shall demonstrate compliance with the less stringent limitation of 40CFR§63.1657(a)(2)(i).
14	40CFR§63.1656(d) and 45CSR34	4.2.3.	Compliance demonstration with opacity standards	Compliance demonstration with opacity standards. a. 1. The owner or operator must conduct initial opacity observations for the shop building to demonstrate compliance with the applicable opacity standards according to 40CFR§63.6(h)(5), which addresses the conduct of opacity or visible emission observations. 2. In conducting the opacity observations of the shop building, the observer must limit his or her field of view to the area of the shop building roof monitor that corresponds to the placement of the affected submerged arc furnaces. 3. The owner or operator must conduct the opacity observations according to EPA Method 9 of 40CFR part 60, appendix A, for a minimum of 60 minutes. b. 1. When demonstrating initial compliance with the shop building opacity standard, as required by Section 4.2.1.a.1. of this permit, the owner or operator must simultaneously establish parameter values for one of the following: The control system fan motor amperes and all capture system damper positions, the total volumetric flow rate to the air pollution control device and all capture system damper positions, or volumetric flow rate through each separately ducted hood that comprises the capture system. 2. The owner or operator may petition the Administrator to reestablish these parameters whenever he or she can demonstrate to the Administrator's satisfaction that the submerged arc furnace operating conditions upon which the parameters were previously established are no longer applicable. The values of these parameters determined during the most recent demonstration of compliance must be maintained at the appropriate level for each applicable period. c. The owner or operator must demonstrate continuing compliance with the opacity standards by following the monitoring requirements specified in Section 4.2.4. of this permit and the reporting and recordkeeping requirements specified in Sections 3.5.15.b.c. and 3.4.5.b. of this permit.

List all applicable requirements for this emission unit. For each applicable requirement, include the underlying rule/regulation citation and/or construction permit with the condition number. (*Note: Title V permit condition numbers alone are not the underlying applicable requirements*). If an emission limit is calculated based on the type of source and design capacity or if a standard is based on a design parameter, this information should also be included.

No.	Rule/ Regulation/ R13 Permit	Existing R30 Permit Condition	Name	Requirement
15	40CFR§63.1657(c) and 45CSR34	4.2.4.	Shop Opacity	The owner or operator subject to the opacity standards in 40CFR§63.1653 must comply with one of the monitoring options in paragraphs a., b., or c. below. The selected option must be consistent with that selected during the initial performance test described in Section 4.2.3.b. of this permit. Alternatively, the owner or operator may use the provisions of 40CFR§63.8(f) to request approval to use an alternative monitoring method. a. The owner or operator must check and record the control system fan motor amperes and capture system damper positions once per shift. b. The owner or operator must install, calibrate, and maintain a monitoring device that continuously records the volumetric flow rate through each separately ducted hood. c. The owner or operator must install, calibrate, and maintain a monitoring device that continuously records the volumetric flow rate at the inlet of the air pollution control device and must check and record the capture system damper positions once per shift. d. The flow rate monitoring devices must meet the following requirements: 1. Be installed in an appropriate location in the exhaust duct such that reproducible flow rate monitoring will result. 2. Have an accuracy ±10 percent over its normal operating range and be calibrated according to the manufacturer's instructions. e. The Administrator may require the owner or operator to demonstrate the accuracy of the monitoring device(s) relative to Methods 1 and 2 of 40CFR part 60, appendix A. f. Failure to maintain the appropriate capture system parameters (fan motor amperes, flow rate, and/or damper positions) establishes the need to initiate corrective action as soon as practicable after the monitoring excursion in order to minimize excess emissions. g. Failure to monitor or failure to take corrective action under the requirements of Section 4.2.4. of this permit is a violation of the general duty to operate in a manner consistent with good air pollution control practices that minimizes emissions per 40CFR§63.6(e)(1)(i).
16	45CSR§10-8.1.	4.3.1.	Sulfur Dioxide Limit	The permittee shall demonstrate compliance with Section 4.1.8. of this permit by periodic testing in accordance with 40CFR Part 60, Appendix A, Method 6 or other equivalent EPA testing method approved by the Director and the approved monitoring plan (See Appendix B).
17	CO-R7-E-2004.13, Condition III.4., 40CFR§§63.1658(d) and (e), 40CFR§63.7, and 45CSR34	4.3.2.	Stack Testing 40CFR63, Subpart XXX	Stack tests in accordance with 40CFR Part 63, Subpart XXX shall be performed within ninety (90) days of startup of any furnace. At least sixty (60) days prior to conducting stack tests, a test protocol shall be submitted to DAQ outlining test methodologies, operating conditions, port locations, and any other information deemed necessary by DAQ. Compliance with these limits shall demonstrate compliance with the less stringent limitations of 40CFR§§63.1658(d) and (e), and 40CFR§63.7.
18	CO MM-06-001, Order for Compliance – Air Quality, Condition 5.	4.3.3.	Stack Test Protocol	Within 45 days of initiating furnace operations, the permitee will submit a stack testing plan for the operating furnace(s) at the facility.
19	CO MM-06-001, Order for Compliance – Air Quality, Condition 6.	4.3.4.	Stack Testing	Within 180 days of initiating furnace operations, the permittee will conduct stack testing for PM, NO_x SO_x, VOCs and CO for all operating furnaces at the facility.

List all applicable requirements for this emission unit. For each applicable requirement, include the underlying rule/regulation citation and/or <u>construction permit</u> with the condition number. (*Note: Title V permit condition numbers alone are not the underlying applicable requirements*). If an emission limit is calculated based on the type of source and design capacity or if a standard is based on a design parameter, this information should also be included.

No.	Rule/ Regulation/ R13 Permit	Existing R30 Permit Condition	Name	Requirement
20	40CFR§§63.1656(c)(1), (2), (3)(ii), and 45CSR34	4.3.5.	Compliance Demonstration with the Emissions Standards	Compliance demonstration with the emissions standards. a. The owner or operator must conduct an initial performance test for air pollution control devices or vent stacks subject to Section 4.1.11. of this permit to demonstrate compliance with the applicable emission standards. b. The owner or operator must conduct annual performance tests for the air pollution control devices and vent stacks associated with the submerged arc furnaces, with the exception of any air pollution control devices that serve tapping emissions combined with non-furnace emissions, such as equipment associated with crushing and screening. Also excluded are air pollution control devices that serve dedicated non-furnace emissions, such as equipment associated with crushing and screening. The results of these annual tests will be used to demonstrate compliance with the emission standards in Section 4.1.11. of this permit, as applicable. c. Following development, and approval, if required, of the site-specific test plan, the owner or operator must conduct a performance test for each air pollution control device or vent stack to measure particulate matter and determine compliance with the applicable standard. An owner or operator of sources subject to the particulate mass rate standards in Section 4.1.11. of this permit must determine compliance as follows: 1. Determine the particulate matter concentration and volumetric flow rate using Method 5 or 5D, as applicable. 2. Compute the mass rate (E_M) of particulate matter for each run using the following equation: $EM = \left[\sum_{i-1}^{N} CsiQsdi \right] / K$ Where: EM = mass rate of particulate matter, kg/hr (lb/hr). N = total number of exhaust streams at which emissions are quantified. Csi = concentration of particulate matter from exhaust stream “i”, mg/dscm (gr/dscf). Qsdi = volumetric flow rate of effluent gas from exhaust stream “i”, dscm/hr (dscf/hr) K = conversion factor, 1 × 106 mg/kg (7,000 gr/lb). 3. Compliance is demonstrated if the average of the mass rates for the three runs comprising the performance test does not exceed the standard.
21	CO-R7-95-13, Conditions 7.b.3.	4.4.1.	Recordkeeping	Records of the visible emission checks conducted in accordance with Section 4.2.1. of this permit shall be maintained in accordance with Section 3.2.2. of this permit.

List all applicable requirements for this emission unit. For each applicable requirement, include the underlying rule/regulation citation and/or <u>construction permit</u> with the condition number. (*Note: Title V permit condition numbers alone are not the underlying applicable requirements*). If an emission limit is calculated based on the type of source and design capacity or if a standard is based on a design parameter, this information should also be included.

No.	Rule/ Regulation/ R13 Permit	Existing R30 Permit Condition	Name	Requirement
22	CO-R7-95-13, Condition 7.b.2.A.	4.4.2.	Recordkeeping	The permittee shall record on a daily basis: a. During each incident of by-pass cap usage or where any visual emissions are observed from such by-pass cap, the permittee shall record the following information: i. Exact time that the by-pass cap was opened; ii. Exact time that the by-pass cap was closed; iii. Cause or causes leading to the by-pass cap usage; iv. Actions taken to prevent recurrence of cause or causes leading to by-pass cap usage; v. Reports of any citizen complaints filed with or received by the permittee; vi. Power input to the furnace.
23	CO-R7-95-13, Condition 7.b.5.	4.4.3.	Fan Curve Record	The permittee shall maintain on file at the facility a permanent record of the fan performance curve or representative fan performance curve prepared for a specific temperature for each furnace baghouse fan.
24	CO-R7-95-13, Condition 7.b.6.	4.4.4.	Log of "blowing tap holes," poling, and oxygen lancing	The permittee shall maintain a certified log of the time, duration and furnace number of all "blowing tap holes," "poling," and "oxygen lancing" at each furnace. This log must be made available upon request of any representative of the Division of Air Quality and must be retained for five (5) years.
25	CO-R7-E-2004.13, Condition III.11.	4.5.1	Restart of Furnace Notification	The permittee shall notify DAQ at least 48 hours prior to restarting any furnace at the facility.
26	CO MM-06-001, Order for Compliance – Air Quality, Condition 2.	4.5.2.	Restart of Furnace Notification	The permittee will provide notice to the DAQ no less than 5 days prior to initial operation of any furnace at the facility.
27	CO MM-06-001, Order for Compliance – Air Quality, Condition 7.	4.5.3.	Stack Test Report	Within 60 days of completing stack testing, the permittee will submit a report of stack testing on all furnaces operating at the facility.
28	CO MM-06-001, Other Provisions, Condition 3.	4.5.4.	CO 1-2006 MM	If any event occurs which causes delay in the achievement of the requirements of Consent Order 1-2006 MM, the permittee shall have the burden of proving that the delay was caused by circumstances beyond its reasonable control which could not have been overcome by due diligence (i.e., force majeure). Force majeure shall not include delays caused or contributed to by the lack of sufficient funding. Within three (3) working days after the permittee becomes aware of such a delay, notification shall be provided to the Director/Chief Inspector and shall, within ten (10) working days of initial notification, submit a detailed written explanation of the anticipated length and cause of the delay, the measures taken and/or to be taken to prevent or minimize the delay, and a timetable by which the permittee intends to implement these measures. If the Director agrees that the delay has been or will be caused by circumstances beyond the reasonable control of the permittee (i.e., force majeure), the time for performance hereunder shall be extended for a period of time equal to the delay resulting from such circumstances. A force majeure amendment granted by the Director shall be considered a binding extension of this Order and of the requirements herein. The determination of the Director shall be final and not subject to appeal.

List all applicable requirements for this emission unit. For each applicable requirement, include the underlying rule/regulation citation and/or construction permit with the condition number. (*Note: Title V permit condition numbers alone are not the underlying applicable requirements*). If an emission limit is calculated based on the type of source and design capacity or if a standard is based on a design parameter, this information should also be included.

No.	Rule/ Regulation/ R13 Permit	Existing R30 Permit Condition	Name	Requirement
29	45CSR§30-4.3.h.1.c.	4.6.1.	Test Protocol	The permittee shall submit a test protocol to DAQ in accordance with Section 4.3.2. of this permit within 30 days of the effective date of the Title V Permit.
30	45CSR§30-4.3.h.1.c.	4.6.2	Stack Test	The permittee shall conduct stack tests in accordance with Sections 4.3.2. and 4.3.5. of this permit within 90 days of the effective date of the Title V Permit.
31	45CSR§30-4.3.h.1.c	4.6.3.	Stack Testing Plan	The permittee shall submit a stack testing plan for the operating furnace(s) at the facility in accordance with Section 4.3.3. of this permit within 45 days of the effective date of the Title V Permit.
32	45CSR§30-4.3.h.1.c	4.6.4.	Stack Test	The permittee shall conduct stack tests for PM, NOx, SOx, VOCs and CO for all operating furnaces at the facility in accordance with Section 4.3.4. of this permit within 180 days of the effective date of the Title V Permit.

For all applicable requirements listed above, provide monitoring/testing/recordkeeping/reporting which shall be used to demonstrate compliance. If the method is based on a permit or rule, include the condition number or citation. (Note: Each requirement listed above must have an associated method of demonstrating compliance. If there is not already a required method in place, then a method must be proposed.)

No.	Rule/ Regulation/ R13 Permit	Existing R30 Permit Condition	Name	Method of Compliance
1	45CSR§§7-3.1 and 3.2 40CFR§3.1653, and 45CSR34	4.1.1	Opacity	Opacity Testing as required.
2	45CSR§§7-4.3.	4.1.2	Dilution Prohibition	NA
3	45CSR§7-4.7.a..	4.1.3	Regulation 7 Exemption	NA
4	45CSR§7-4.12.	4.1.4.	Stack Requirement	NA
5	45CSR§7-4.13.	4.1.5.	HAP	NA
6	45CSR§7-5.1	4.1.6.	Minimization of Fugitive PM	NA
7	45CSR§7-5.3., 40 CFR§63.1653(b), and 45CSR34	4.1.7.	4.1.1. and 4.1.6. Exclusion 5	NA
8	45CSR§10-4.1.	4.1.8.	Sulfur DioxideLimit	Regulation 10 Monitoring Plan Required
9	CO-R7-E-2004-13, Condition III.4.	4.1.9.	40CFR63, Subpart XXX	Compliance with 40CFR63, Subpart XXX, within 90 days of start up.
10	CO-R7-E-2004-13, Condition III.10.	4.1.10.	Furnace 9 Restart	Permit required to restart Furnace No. 9.
11	40CFR§63.1652(b) and 45CSR34	4.1.11.	PM Limits	Stack testing as required.
12	CO-R7-95-13, Conditions 7.b.1.A. and B. and 40CFR§63.1652(b) and 45CSR34	4.2.1.	Visible Emissions	Conduct VE observations as required.
13	CO-R7-95-13, Condition 7.b.4. and 40CFR§63.1657(a)(2)(i). and 45CSR34	4.2.2.	Recording	Calibrate, maintain, and operate instruments to continuously monitor and record power input to each furnace, current or power input and winding temperature for baghouse for motor and pressure drop across the baghouses.
14	40CFR§63.1656(d) and 45CSR34	4.2.3.	Compliance Demonstration with Opacity Standards	Conduct VE/opacity testing as required.

For all applicable requirements listed above, provide monitoring/testing/recordkeeping/reporting which shall be used to demonstrate compliance. If the method is based on a permit or rule, include the condition number or citation. (Note: Each requirement listed above must have an associated method of demonstrating compliance. If there is not already a required method in place, then a method must be proposed.)				
No.	**Rule/ Regulation/ R13 Permit**	**Existing R30 Permit Condition**	**Name**	**Method of Compliance**
15	40CFR§63.1657(c) and 45CSR34	4.2.4.	Shop Opacity	40CFR63.1653 monitoring.
16	45CSR§10-8.1.	4.3.1.	Sulfur Dioxide Limit	Sulfur monitoring and periodic testing.
17	CO-R7-E-2004.13, Condition III.4., 40CFR§§63.1658(d) and (e), 40CFR§63.7, and 45CSR34	4.3.2.	Stack Testing 40CFR63, Subpart XXX	40CFR63, Subpart XXX stack testing after startup.
18	CO MM-06-001, Order for Compliance – Air Quality, Condition 5.	4.3.3.	Stack Test Protocol	Stack test plan submission.
19	CO MM-06-001, Order for Compliance – Air Quality, Condition 6.	4.3.4.	Stack Testing	Stack test after initiating furnace operations.
20	40CFR§§63.1656(c)(1), (2), (3)(ii), and 45CSR34	4.3.5.	Compliance Demonstration with the Emissions Standards	Stack testing/performance test.
21	CO-R7-95-13, Conditions 7.b.3.	4.4.1.	Recordkeeping	VE observations and records.
22	CO-R7-95-13, Condition 7.b.2.A.	4.4.2.	Recordkeeping	Daily required records for by-pass cap.
23	CO-R7-95-13, Condition 7.b.5.	4.4.3.	Record Fan Curve	Record of fan performance curve on site.
24	CO-R7-95-13, Condition 7.b.6.	4.4.4.	Log of "blowing tap holes," poling, and oxygen lancing	Certified log of time, duration, and furnace number for blowing tap holes, poling, and oxygen lancing at each furnace.
25	CO-R7-E-2004.13, Condition III.11.	4.5.1	Restart of Furnace Notifications	Restart notifications.
26	CO MM-06-001, Order for Compliance – Air Quality, Condition 2.	4.5.2.	Restart of Furnace Notifications	Restart notifications.

For all applicable requirements listed above, provide monitoring/testing/recordkeeping/reporting which shall be used to demonstrate compliance. If the method is based on a permit or rule, include the condition number or citation. (Note: Each requirement listed above must have an associated method of demonstrating compliance. If there is not already a required method in place, then a method must be proposed.)				
No.	**Rule/ Regulation/ R13 Permit**	**Existing R30 Permit Condition**	**Name**	**Method of Compliance**
27	CO MM-06-001, Order for Compliance – Air Quality, Condition 7.	4.5.3.	Stack Test Report	Stack test report required.
28	CO MM-06-001, Other Provisions, Condition 3.	4.5.4.	CO 1-2006MM	Submit as needed updates on CO MM-06-001.
29	45CSR§30-4.3.h.1.c.	4.6.1.	Test Protocol	Submit test protocol for stack testing.
30	45CSR§30-4.3.h.1.c.	4.6.2	Stack Test	Stack Testing.
31	45CSR§30-4.3.h.1.c	4.6.3.	Stack Testing Plan	Stack Testing Plan.
32	45CSR§30-4.3.h.1.c	4.6.4.	Stack Test	Conduct Stack Testing: Parameters.

ATTACHMENT E - Emission Unit Form

Emission Unit Description

Emission unit ID number:	**Emission unit name:**	**List any control devices associated with this emission unit:**
00A-01	Product Casting Operations	Baghouses

Provide a description of the emission unit (type, method of operation, design parameters, etc.):
This emission unit quantifies emissions from the casting of molten ferroalloy product. Casting is carried out on four large casting wheels; one dedicated to each of the four submerged electric arc furnaces. Emissions from casting operations are controlled by the same baghouses used to control emissions from the furnaces.

Manufacturer:	**Model number:**	**Serial number:**
NA	NA	NA

Construction date:	**Installation date:**	**Modification date(s):**
NA	NA	NA

Design Capacity (examples: furnaces - tons/hr, tanks - gallons):
20 tph and 165,367 tpy

Maximum Hourly Throughput:	**Maximum Annual Throughput:**	**Maximum Operating Schedule:**
20 tpy	165,367 tpy	8,760 hr/yr

Fuel Usage Data **(fill out all applicable fields)**

Does this emission unit combust fuel? ___Yes _X_ No	**If yes, is it?** ___ Indirect Fired ___Direct Fired
Maximum design heat input and/or maximum horsepower rating:	**Type and Btu/hr rating of burners:**

List the primary fuel type(s) and if applicable, the secondary fuel type(s). For each fuel type listed, provide the maximum hourly and annual fuel usage for each.

Describe each fuel expected to be used during the term of the permit.

Fuel Type	Max. Sulfur Content	Max. Ash Content	BTU Value

Emissions Data		
Criteria Pollutants	Potential Emissions	
	PPH	TPY
Carbon Monoxide (CO)		
Nitrogen Oxides (NO_X)		
Lead (Pb)		
Particulate Matter ($PM_{2.5}$)	0.44	0.19
Particulate Matter (PM_{10})	0.44	0.19
Total Particulate Matter (TSP)	0.44	0.19
Sulfur Dioxide (SO_2)		
Volatile Organic Compounds (VOC)		
Hazardous Air Pollutants	Potential Emissions	
	PPH	TPY
Regulated Pollutants other than Criteria and HAP	Potential Emissions	
	PPH	TPY

List the method(s) used to calculate the potential emissions (include dates of any stack tests conducted, versions of software used, source and dates of emission factors, etc.).

PM10 – Emission factor for ferroalloy casting was obtained from the Ohio EPA Study, "Reasonably Available Control Measures for Fugitive Dust Sources", September 1980, Ohio Environmental Protection Agency, Division for Air Pollution Control. Emission factor is as follows: 2.4 lb/ton processed. Conservatively assume PM2.5 is equal to PM10.

Emissions from casting are fugitive within the building and, based on observation and engineering judgment, approximately 20% of emissions are released through the roof monitors. The remaining 80% is captured by the baghouses. Therefore, emission factor is as follows: 2.4 lb/ton x (1-0.80) = 0.48 lb/ton. Conservatively assume all PM is PM10.

TSP – Emission factor for ferroalloy casting was obtained from the Ohio EPA Study "Reasonably Available Control Measures for Fugitive Dust Sources", September 1980, Ohio Environmental Protection Agency, Division for Air Pollution Control. Emission factor is as follows: 2.4 lb/ton processed.

Emissions from casting are fugitive within the building and, based on observation and engineering judgment, approximately 20% of emissions are released through the roof monitors. The remaining 80% is captured by the baghouses. Therefore, emission factor is as follows: 2.4 lb/ton x (1-0.80) = 0.48 lb/ton. Conservatively assume all PM is PM10.

Applicable Requirements
List all applicable requirements for this emission unit. For each applicable requirement, include the underlying rule/regulation citation and/or <u>construction permit</u> with the condition number. (*Note: Title V permit condition numbers alone are not the underlying applicable requirements*). If an emission limit is calculated based on the type of source and design capacity or if a standard is based on a design parameter, this information should also be included. See Pages 67 and 68
_X_ Permit Shield
For all applicable requirements listed above, provide monitoring/testing/recordkeeping/reporting which shall be used to demonstrate compliance. If the method is based on a permit or rule, include the condition number or citation. (Note: Each requirement listed above must have an associated method of demonstrating compliance. If there is not already a required method in place, then a method must be proposed.) See Page 69
Are you in compliance with all applicable requirements for this emission unit? _X_ Yes ___No If no, complete the **Schedule of Compliance Form** as **ATTACHMENT F**.

ATTACHMENT E - Emission Unit Form

Emission Unit Description

Emission unit ID number:	**Emission unit name:**	**List any control devices associated with this emission unit:**
00C-01	Ladle Burners	NA

Provide a description of the emission unit (type, method of operation, design parameters, etc.):
Ladle burners are used to heat/reheat ladles containing molten ferroalloy. The ladle burners fire No. 2 oil.

Manufacturer:	**Model number:**	**Serial number:**
NA	NA	NA
Construction date:	**Installation date:**	**Modification date(s):**
NA	NA	NA

Design Capacity (examples: furnaces - tons/hr, tanks - gallons): 140 MMBtu/hr

Maximum Hourly Throughput:	**Maximum Annual Throughput:**	**Maximum Operating Schedule:**
40 gph each	44,000 gpy	8,760 hr/yr

***Fuel Usage Data* (fill out all applicable fields)**

Does this emission unit combust fuel?	**If yes, is it?**
__X__ Yes ___ No	___ Indirect Fired __X__ Direct Fired
Maximum design heat input and/or maximum horsepower rating:	**Type and Btu/hr rating of burners:**
140 MMBtu/hr	140 MMBtu/hr

List the primary fuel type(s) and if applicable, the secondary fuel type(s). For each fuel type listed, provide the maximum hourly and annual fuel usage for each.

No. 2 Fuel Oil

Describe each fuel expected to be used during the term of the permit.

Fuel Type	Max. Sulfur Content	Max. Ash Content	BTU Value
No. 2 Fuel Oil	0.05%	NA	~140MMBtu / 1,000 gal

Emissions Data		
Criteria Pollutants	Potential Emissions	
	PPH	TPY
Carbon Monoxide (CO)	0.0479	0.21
Nitrogen Oxides (NO_X)	0.10	0.44
Lead (Pb)		
Particulate Matter ($PM_{2.5}$)	4.47	19.57
Particulate Matter (PM_{10})	4.47	19.57
Total Particulate Matter (TSP)	4.47	19.57
Sulfur Dioxide (SO_2)	0.069	0.30
Volatile Organic Compounds (VOC)	0.003	0.01
Hazardous Air Pollutants	Potential Emissions	
	PPH	TPY
Regulated Pollutants other than Criteria and HAP	Potential Emissions	
	PPH	TPY

List the method(s) used to calculate the potential emissions (include dates of any stack tests conducted, versions of software used, source and dates of emission factors, etc.).

PM10 – Emission factor for PM = 2 lb/1,000 gal burned
44,000 gal/yr used
50% of PM is PM-10
Therefore, PM10 emission factor = 1 lb/1,000 gal. Conservatively assume PM 2.5 is equal to PM10.

TSP – Emission factor = 2 lb/1,000 gal burned
44,000 gal/yr used

SO2 – Emission factor – 124S lb/1,000 gal burned
44,000 gal/yr used
S = 0.05%
Emission Factor = 7.1 lb/1,000 gal burned

VOC – Emission factor = 0.34 lb/1,000 gal burned
44,000 gal/yr used

NOx – Emission factor = 20 lb/1,000 gal burned
44,000 gal/yr used

CO – Emission factor = 5 lb/1,000 gal burned
44,000 gal/yr used

Applicable Requirements
List all applicable requirements for this emission unit. For each applicable requirement, include the underlying rule/regulation citation and/or <u>construction permit</u> with the condition number. (*Note: Title V permit condition numbers alone are not the underlying applicable requirements*). If an emission limit is calculated based on the type of source and design capacity or if a standard is based on a design parameter, this information should also be included. See Pages 67 and 68
__X__ Permit Shield
For all applicable requirements listed above, provide monitoring/testing/recordkeeping/reporting which shall be used to demonstrate compliance. If the method is based on a permit or rule, include the condition number or citation. (Note: Each requirement listed above must have an associated method of demonstrating compliance. If there is not already a required method in place, then a method must be proposed.) See Page 69
Are you in compliance with all applicable requirements for this emission unit? __X__ Yes ___No If no, complete the **Schedule of Compliance Form** as **ATTACHMENT F**.

ATTACHMENT E - Emission Unit Form

Emission Unit Description

Emission unit ID number:	**Emission unit name:**	**List any control devices associated with this emission unit:**
002-0B	Outdoor Storage Piles	NA

Provide a description of the emission unit (type, method of operation, design parameters, etc.):
Raw materials are stored outside of the main facility building on approximately 3 acres of land.

Manufacturer:	**Model number:**	**Serial number:**
NA	NA	NA
Construction date:	**Installation date:**	**Modification date(s):**
1952	1952	NA

Design Capacity (examples: furnaces - tons/hr, tanks - gallons): 3 Acres

Maximum Hourly Throughput:	**Maximum Annual Throughput:**	**Maximum Operating Schedule:**
NA	NA	8,760 hr/yr

Fuel Usage Data **(fill out all applicable fields)**

Does this emission unit combust fuel? ___Yes __X__ No	**If yes, is it?** ___ Indirect Fired ___Direct Fired
Maximum design heat input and/or maximum horsepower rating:	**Type and Btu/hr rating of burners:**

List the primary fuel type(s) and if applicable, the secondary fuel type(s). For each fuel type listed, provide the maximum hourly and annual fuel usage for each.

Describe each fuel expected to be used during the term of the permit.

Fuel Type	Max. Sulfur Content	Max. Ash Content	BTU Value

Emissions Data		
Criteria Pollutants	Potential Emissions	
	PPH	TPY
Carbon Monoxide (CO)		
Nitrogen Oxides (NO_X)		
Lead (Pb)		
Particulate Matter ($PM_{2.5}$)	0.44	1.93
Particulate Matter (PM_{10})	0.44	1.93
Total Particulate Matter (TSP)	0.44	1.93
Sulfur Dioxide (SO_2)		
Volatile Organic Compounds (VOC)		
Hazardous Air Pollutants	Potential Emissions	
	PPH	TPY
Regulated Pollutants other than Criteria and HAP	Potential Emissions	
	PPH	TPY

List the method(s) used to calculate the potential emissions (include dates of any stack tests conducted, versions of software used, source and dates of emission factors, etc.).

PM10 – Emissions from raw material storage piles based on WV emission factor of 3.5 lb/acre/day. Emissions were calculated as follows:
Lb/hr = (3.5 lb/acre/day)(3 acres)/(24 hr/day) = 0.4375 lb/hr
Ton/yr = (3.5 lb/acre/day)(3 acres)(365 day/yr)/(2000 lb/ton) = 1.92 ton/yr
Conservatively assume PM2.5 is equal to PM10.

TSP – Emissions from raw material storage piles based on WV emission factor of 2.5 lb/acre/day. Emissions were calculated as follows:
Lb/hr = (3.5 lb/acre/day)(3 acres)/(24 hr/day) = 0.44 lb/hr
Ton/yr = (3.5 lb/acre/day)(3 acres)(365 day/yr)/(2000 lb/ton) = 1.92 ton/yr

Applicable Requirements
List all applicable requirements for this emission unit. For each applicable requirement, include the underlying rule/regulation citation and/or <u>construction permit</u> with the condition number. (*Note: Title V permit condition numbers alone are not the underlying applicable requirements*). If an emission limit is calculated based on the type of source and design capacity or if a standard is based on a design parameter, this information should also be included. No Specific Requirement.
__X__ Permit Shield
For all applicable requirements listed above, provide monitoring/testing/recordkeeping/reporting which shall be used to demonstrate compliance. If the method is based on a permit or rule, include the condition number or citation. (Note: Each requirement listed above must have an associated method of demonstrating compliance. If there is not already a required method in place, then a method must be proposed.) No Specific Requirement.
Are you in compliance with all applicable requirements for this emission unit? __X__Yes ___No If no, complete the **Schedule of Compliance Form** as **ATTACHMENT F**.

ATTACHMENT E - Emission Unit Form

Emission Unit Description

Emission unit ID number:	**Emission unit name:**	**List any control devices associated with this emission unit:**
005-01	Unpaved Roads – Raw Material Delivery	NA

Provide a description of the emission unit (type, method of operation, design parameters, etc.):
This emission unit quantifies emissions caused by vehicle traffic occurring during raw material delivery.

Manufacturer:	**Model number:**	**Serial number:**
NA	NA	NA
Construction date:	**Installation date:**	**Modification date(s):**
NA	NA	NA

Design Capacity (examples: furnaces - tons/hr, tanks - gallons): NA

Maximum Hourly Throughput:	**Maximum Annual Throughput:**	**Maximum Operating Schedule:**
NA	NA	8,760 hr/yr

Fuel Usage Data **(fill out all applicable fields)**

Does this emission unit combust fuel? ___Yes __X__ No	**If yes, is it?** ___ Indirect Fired ___Direct Fired
Maximum design heat input and/or maximum horsepower rating:	**Type and Btu/hr rating of burners:**

List the primary fuel type(s) and if applicable, the secondary fuel type(s). For each fuel type listed, provide the maximum hourly and annual fuel usage for each.

Describe each fuel expected to be used during the term of the permit.

Fuel Type	Max. Sulfur Content	Max. Ash Content	BTU Value

Emissions Data		
Criteria Pollutants	Potential Emissions	
	PPH	TPY
Carbon Monoxide (CO)		
Nitrogen Oxides (NO_X)		
Lead (Pb)		
Particulate Matter ($PM_{2.5}$)	0.02	0.099
Particulate Matter (PM_{10})	0.02	0.099
Total Particulate Matter (TSP)	0.05	0.221
Sulfur Dioxide (SO_2)		
Volatile Organic Compounds (VOC)		
Hazardous Air Pollutants	Potential Emissions	
	PPH	TPY
Regulated Pollutants other than Criteria and HAP	Potential Emissions	
	PPH	TPY

List the method(s) used to calculate the potential emissions (include dates of any stack tests conducted, versions of software used, source and dates of emission factors, etc.).

PM10 – Emissions estimated using the method described in AP-42 5th Edition, Chapter 13.2.2 and assuming a 50% control efficiency since roadways are sprayed regularly to keep dust down. Particle size multiplier for PM is 0.80. Emission factor = 5.89 lb/VMT x (1-0.50) = 2.945 lb/VMT. Particle size multiplier for PM10 is 0.36. Therefore, PM10 emissions = (2.945 lb/hr)(0.36)/(0.80) = 1.325 lb/hr.
Conservatively assume PM 2.5 is equal to PM10.

TSP – Emissions estimated using the method described in AP-42 5th Edition, Chapter 13.2.2 and assuming a 50% control efficiency since roadways are sprayed regularly to keep dust down. Particle size multiplier for PM is 0.80. Emission factor is 5.89 lb/VMT x (1-0.50) = 2.945 lb/VMT.

Applicable Requirements
List all applicable requirements for this emission unit. For each applicable requirement, include the underlying rule/regulation citation and/or <u>construction permit</u> with the condition number. (*Note: Title V permit condition numbers alone are not the underlying applicable requirements*). If an emission limit is calculated based on the type of source and design capacity or if a standard is based on a design parameter, this information should also be included. No Specific Requirement.
_X_ Permit Shield
For all applicable requirements listed above, provide monitoring/testing/recordkeeping/reporting which shall be used to demonstrate compliance. If the method is based on a permit or rule, include the condition number or citation. (Note: Each requirement listed above must have an associated method of demonstrating compliance. If there is not already a required method in place, then a method must be proposed.) No Specific Requirement.
Are you in compliance with all applicable requirements for this emission unit? _X_ Yes ___No If no, complete the **Schedule of Compliance Form** as **ATTACHMENT F**.

ATTACHMENT E - Emission Unit Form

Emission Unit Description

Emission unit ID number:	**Emission unit name:**	**List any control devices associated with this emission unit:**
005-02	Unpaved Roads – Gravel Delivery	NA

Provide a description of the emission unit (type, method of operation, design parameters, etc.):
This emission unit quantifies emissions caused by vehicle traffic occurring during gravel delivery.

Manufacturer:	**Model number:**	**Serial number:**
NA	NA	NA
Construction date:	**Installation date:**	**Modification date(s):**
NA	NA	NA

Design Capacity (examples: furnaces - tons/hr, tanks - gallons): NA

Maximum Hourly Throughput:	**Maximum Annual Throughput:**	**Maximum Operating Schedule:**
NA	NA	8,760 hr/yr

Fuel Usage Data **(fill out all applicable fields)**

Does this emission unit combust fuel? ___Yes __X__ No	**If yes, is it?** ___ Indirect Fired ___Direct Fired
Maximum design heat input and/or maximum horsepower rating:	**Type and Btu/hr rating of burners:**

List the primary fuel type(s) and if applicable, the secondary fuel type(s). For each fuel type listed, provide the maximum hourly and annual fuel usage for each.

Describe each fuel expected to be used during the term of the permit.

Fuel Type	Max. Sulfur Content	Max. Ash Content	BTU Value

Emissions Data		
Criteria Pollutants	Potential Emissions	
	PPH	TPY
Carbon Monoxide (CO)		
Nitrogen Oxides (NO_X)		
Lead (Pb)		
Particulate Matter ($PM_{2.5}$)	0.06	0.25
Particulate Matter (PM_{10})	0.06	0.25
Total Particulate Matter (TSP)	0.13	0.56
Sulfur Dioxide (SO_2)		
Volatile Organic Compounds (VOC)		
Hazardous Air Pollutants	Potential Emissions	
	PPH	TPY
Regulated Pollutants other than Criteria and HAP	Potential Emissions	
	PPH	TPY

List the method(s) used to calculate the potential emissions (include dates of any stack tests conducted, versions of software used, source and dates of emission factors, etc.).

PM10 – Emissions estimated using the method described in AP-42 5th Edition, Chapter 13.2.2 and assuming a 50% control efficiency since roadways are sprayed regularly to keep dust down. Particle size multiplier for PM is 0.80. Emission factor = 5.89 lb/VMT x (1-0.50) = 2.945 lb/VMT. Particle size multiplier for PM10 is 0.36. Therefore, PM10 emissions = (2.945 lb/hr)(0.36)/(0.80) = 1.325 lb/hr.
Conservatively assume PM2.5 is equal to PM10.

TSP – Emissions estimated using the method described in AP-42 5th Edition, Chapter 13.2.2 and assuming a 50% control efficiency since roadways are sprayed regularly to keep dust down. Particle size multiplier for PM is 0.80. Emission factor is 5.89 lb/VMT x (1-0.50) = 2.945 lb/VMT.

Applicable Requirements
List all applicable requirements for this emission unit. For each applicable requirement, include the underlying rule/regulation citation and/or construction permit with the condition number. (*Note: Title V permit condition numbers alone are not the underlying applicable requirements*). If an emission limit is calculated based on the type of source and design capacity or if a standard is based on a design parameter, this information should also be included. No Specific Requirement.
_X_ Permit Shield
For all applicable requirements listed above, provide monitoring/testing/recordkeeping/reporting which shall be used to demonstrate compliance. If the method is based on a permit or rule, include the condition number or citation. (Note: Each requirement listed above must have an associated method of demonstrating compliance. If there is not already a required method in place, then a method must be proposed.) No Specific Requirement.
Are you in compliance with all applicable requirements for this emission unit? _X_ Yes ___No If no, complete the **Schedule of Compliance Form** as **ATTACHMENT F**.

ATTACHMENT E - Emission Unit Form

Emission Unit Description

Emission unit ID number:	**Emission unit name:**	**List any control devices associated with this emission unit:**
005-03	Unpaved Roads – Wood Chips Delivery	NA

Provide a description of the emission unit (type, method of operation, design parameters, etc.):
This emission unit quantifies emissions caused by vehicle traffic occurring during wood chip delivery.

Manufacturer:	**Model number:**	**Serial number:**
NA	NA	NA
Construction date:	**Installation date:**	**Modification date(s):**
NA	NA	NA

Design Capacity (examples: furnaces - tons/hr, tanks - gallons): NA

Maximum Hourly Throughput:	**Maximum Annual Throughput:**	**Maximum Operating Schedule:**
NA	NA	8,760 hr/yr

Fuel Usage Data **(fill out all applicable fields)**

Does this emission unit combust fuel? ___Yes __X__ No	**If yes, is it?** ___ Indirect Fired ___Direct Fired
Maximum design heat input and/or maximum horsepower rating:	**Type and Btu/hr rating of burners:**

List the primary fuel type(s) and if applicable, the secondary fuel type(s). For each fuel type listed, provide the maximum hourly and annual fuel usage for each.

Describe each fuel expected to be used during the term of the permit.

Fuel Type	Max. Sulfur Content	Max. Ash Content	BTU Value

Emissions Data		
Criteria Pollutants	Potential Emissions	
	PPH	TPY
Carbon Monoxide (CO)		
Nitrogen Oxides (NO_X)		
Lead (Pb)		
Particulate Matter ($PM_{2.5}$)	0.15	0.68
Particulate Matter (PM_{10})	0.15	0.68
Total Particulate Matter (TSP)	0.34	1.50
Sulfur Dioxide (SO_2)		
Volatile Organic Compounds (VOC)		
Hazardous Air Pollutants	Potential Emissions	
	PPH	TPY
Regulated Pollutants other than Criteria and HAP	Potential Emissions	
	PPH	TPY

List the method(s) used to calculate the potential emissions (include dates of any stack tests conducted, versions of software used, source and dates of emission factors, etc.).

PM10 – Emissions estimated using the method described in AP-42 5th Edition, Chapter 13.2.2 and assuming a 50% control efficiency since roadways are sprayed regularly to keep dust down. Particle size multiplier for PM is 0.80. Emission factor = 5.89 lb/VMT x (1-0.50) = 2.945 lb/VMT. Particle size multiplier for PM10 is 0.36. Therefore, PM10 emissions = (2.945 lb/hr)(0.36)/(0.80) = 1.325 lb/hr.
Conservatively assume PM2.5 is equal to PM10.

TSP – Emissions estimated using the method described in AP-42 5th Edition, Chapter 13.2.2 and assuming a 50% control efficiency since roadways are sprayed regularly to keep dust down. Particle size multiplier for PM is 0.80. Emission factor is 5.89 lb/VMT x (1-0.50) = 2.945 lb/VMT.

Applicable Requirements
List all applicable requirements for this emission unit. For each applicable requirement, include the underlying rule/regulation citation and/or <u>construction permit</u> with the condition number. (*Note: Title V permit condition numbers alone are not the underlying applicable requirements*). If an emission limit is calculated based on the type of source and design capacity or if a standard is based on a design parameter, this information should also be included. No Specific Requirement.
__X__ Permit Shield
For all applicable requirements listed above, provide monitoring/testing/recordkeeping/reporting which shall be used to demonstrate compliance. If the method is based on a permit or rule, include the condition number or citation. (Note: Each requirement listed above must have an associated method of demonstrating compliance. If there is not already a required method in place, then a method must be proposed.) No Specific Requirement.
Are you in compliance with all applicable requirements for this emission unit? __X__Yes ___No If no, complete the **Schedule of Compliance Form** as **ATTACHMENT F**.

ATTACHMENT E - Emission Unit Form

Emission Unit Description

Emission unit ID number:	**Emission unit name:**	**List any control devices associated with this emission unit:**
005-04	Unpaved Roads – Scrap Metal Delivery	NA

Provide a description of the emission unit (type, method of operation, design parameters, etc.):
This emission unit quantifies emissions caused by vehicle traffic occurring during scrap metal delivery.

Manufacturer:	**Model number:**	**Serial number:**
NA	NA	NA
Construction date:	**Installation date:**	**Modification date(s):**
NA	NA	NA

Design Capacity (examples: furnaces - tons/hr, tanks - gallons): NA

Maximum Hourly Throughput:	**Maximum Annual Throughput:**	**Maximum Operating Schedule:**
NA	NA	8,760 hr/yr

Fuel Usage Data **(fill out all applicable fields)**

Does this emission unit combust fuel? ___Yes __X__ No	**If yes, is it?** ___ Indirect Fired ___Direct Fired
Maximum design heat input and/or maximum horsepower rating:	**Type and Btu/hr rating of burners:**

List the primary fuel type(s) and if applicable, the secondary fuel type(s). For each fuel type listed, provide the maximum hourly and annual fuel usage for each.

Describe each fuel expected to be used during the term of the permit.

Fuel Type	Max. Sulfur Content	Max. Ash Content	BTU Value

Emissions Data		
Criteria Pollutants	Potential Emissions	
	PPH	TPY
Carbon Monoxide (CO)		
Nitrogen Oxides (NO_X)		
Lead (Pb)		
Particulate Matter ($PM_{2.5}$)	0.06	0.25
Particulate Matter (PM_{10})	0.06	0.25
Total Particulate Matter (TSP)	0.13	0.56
Sulfur Dioxide (SO_2)		
Volatile Organic Compounds (VOC)		
Hazardous Air Pollutants	Potential Emissions	
	PPH	TPY
Regulated Pollutants other than Criteria and HAP	Potential Emissions	
	PPH	TPY

List the method(s) used to calculate the potential emissions (include dates of any stack tests conducted, versions of software used, source and dates of emission factors, etc.).

PM10 – Emissions estimated using the method described in AP-42 5th Edition, Chapter 13.2.2 and assuming a 50% control efficiency since roadways are sprayed regularly to keep dust down. Particle size multiplier for PM is 0.80. Emission factor = 5.89 lb/VMT x (1-0.50) = 2.945 lb/VMT. Particle size multiplier for PM10 is 0.36. Therefore, PM10 emissions = (2.945 lb/hr)(0.36)/(0.80) = 1.325 lb/hr.
Conservatively assume PM2.5 is equal to PM10.

TSP – Emissions estimated using the method described in AP-42 5th Edition, Chapter 13.2.2 and assuming a 50% control efficiency since roadways are sprayed regularly to keep dust down. Particle size multiplier for PM is 0.80. Emission factor is 5.89 lb/VMT x (1-0.50) = 2.945 lb/VMT. Emissions estimated using the method described in AP-42 5th Edition, Chapter 13.2.2 and assuming a 50% control efficiency since roadways are sprayed regularly to keep dust down. Particle size multiplier for PM10 is 0.36. Therefore, PM10 emissions = (2.945 lb/hr)(0.36)/(0.80) = 1.325 lb/hr.

Applicable Requirements
List all applicable requirements for this emission unit. For each applicable requirement, include the underlying rule/regulation citation and/or <u>construction permit</u> with the condition number. (*Note: Title V permit condition numbers alone are not the underlying applicable requirements*). If an emission limit is calculated based on the type of source and design capacity or if a standard is based on a design parameter, this information should also be included. No Specific Requirement.
_X_ Permit Shield
For all applicable requirements listed above, provide monitoring/testing/recordkeeping/reporting which shall be used to demonstrate compliance. If the method is based on a permit or rule, include the condition number or citation. (Note: Each requirement listed above must have an associated method of demonstrating compliance. If there is not already a required method in place, then a method must be proposed.) No Specific Requirement.
Are you in compliance with all applicable requirements for this emission unit? _X_ Yes ___No If no, complete the **Schedule of Compliance Form** as **ATTACHMENT F**.

ATTACHMENT E - Emission Unit Form

Emission Unit Description

Emission unit ID number:	**Emission unit name:**	**List any control devices associated with this emission unit:**
005-05	Unpaved Roads – Product Shipments	NA

Provide a description of the emission unit (type, method of operation, design parameters, etc.):
This emission quantifies emissions caused by vehicle traffic occurring during product shipments.

Manufacturer:	**Model number:**	**Serial number:**
NA	NA	NA
Construction date:	**Installation date:**	**Modification date(s):**
NA	NA	NA

Design Capacity (examples: furnaces - tons/hr, tanks - gallons): NA

Maximum Hourly Throughput:	**Maximum Annual Throughput:**	**Maximum Operating Schedule:**
NA	NA	8,760 hr/yr

Fuel Usage Data **(fill out all applicable fields)**

Does this emission unit combust fuel? ___Yes _X_ No	**If yes, is it?** ___ Indirect Fired ___Direct Fired
Maximum design heat input and/or maximum horsepower rating:	**Type and Btu/hr rating of burners:**

List the primary fuel type(s) and if applicable, the secondary fuel type(s). For each fuel type listed, provide the maximum hourly and annual fuel usage for each.

Describe each fuel expected to be used during the term of the permit.

Fuel Type	Max. Sulfur Content	Max. Ash Content	BTU Value

Emissions Data		
Criteria Pollutants	Potential Emissions	
	PPH	TPY
Carbon Monoxide (CO)		
Nitrogen Oxides (NO_X)		
Lead (Pb)		
Particulate Matter ($PM_{2.5}$)	0.24	1.05
Particulate Matter (PM_{10})	0.24	1.05
Total Particulate Matter (TSP)	0.53	2.34
Sulfur Dioxide (SO_2)		
Volatile Organic Compounds (VOC)		
Hazardous Air Pollutants	Potential Emissions	
	PPH	TPY
Regulated Pollutants other than Criteria and HAP	Potential Emissions	
	PPH	TPY

List the method(s) used to calculate the potential emissions (include dates of any stack tests conducted, versions of software used, source and dates of emission factors, etc.).

PM10 – Emissions estimated using the method described in AP-42 5th Edition, Chapter 13.2.2 and assuming a 50% control efficiency since roadways are sprayed regularly to keep dust down. Particle size multiplier for PM is 0.80. Emission factor = 5.89 lb/VMT x (1-0.50) = 2.945 lb/VMT. Particle size multiplier for PM10 is 0.36. Therefore, PM10 emissions = (2.945 lb/hr)(0.36)/(0.80) = 1.325 lb/hr.
Conservatively assume PM2.5 is equal to PM10.

TSP – Emissions estimated using the method described in AP-42 5th Edition, Chapter 13.2.2 and assuming a 50% control efficiency since roadways are sprayed regularly to keep dust down. Particle size multiplier for PM is 0.80. Emission factor is 5.89 lb/VMT x (1-0.50) = 2.945 lb/VMT.

Applicable Requirements
List all applicable requirements for this emission unit. For each applicable requirement, include the underlying rule/regulation citation and/or <u>construction permit</u> with the condition number. (*Note: Title V permit condition numbers alone are not the underlying applicable requirements*). If an emission limit is calculated based on the type of source and design capacity or if a standard is based on a design parameter, this information should also be included. No Specific Requirement.
__X__ Permit Shield
For all applicable requirements listed above, provide monitoring/testing/recordkeeping/reporting which shall be used to demonstrate compliance. If the method is based on a permit or rule, include the condition number or citation. (Note: Each requirement listed above must have an associated method of demonstrating compliance. If there is not already a required method in place, then a method must be proposed.) No Specific Requirement.
Are you in compliance with all applicable requirements for this emission unit? __X__ Yes ___No If no, complete the **Schedule of Compliance Form** as **ATTACHMENT F**.

ATTACHMENT E - Emission Unit Form

Emission Unit Description

Emission unit ID number:	**Emission unit name:**	**List any control devices associated with this emission unit:**
005-06	Unpaved Roads – Raw Material Transfer	NA

Provide a description of the emission unit (type, method of operation, design parameters, etc.):
This emission unit quantifies emissions caused by vehicle traffic occurring during raw material transfer from storage piles to the facility by two trucks.

Manufacturer:	**Model number:**	**Serial number:**
NA	NA	NA
Construction date:	**Installation date:**	**Modification date(s):**
NA	NA	NA

Design Capacity (examples: furnaces - tons/hr, tanks - gallons): NA

Maximum Hourly Throughput:	**Maximum Annual Throughput:**	**Maximum Operating Schedule:**
NA	NA	8,760 hr/yr

Fuel Usage Data **(fill out all applicable fields)**

Does this emission unit combust fuel? ___Yes __X__ No	**If yes, is it?** ___ Indirect Fired ___Direct Fired
Maximum design heat input and/or maximum horsepower rating:	**Type and Btu/hr rating of burners:**

List the primary fuel type(s) and if applicable, the secondary fuel type(s). For each fuel type listed, provide the maximum hourly and annual fuel usage for each.

Describe each fuel expected to be used during the term of the permit.

Fuel Type	Max. Sulfur Content	Max. Ash Content	BTU Value

Emissions Data		
Criteria Pollutants	Potential Emissions	
	PPH	TPY
Carbon Monoxide (CO)		
Nitrogen Oxides (NO_X)		
Lead (Pb)		
Particulate Matter ($PM_{2.5}$)	1.35	5.91
Particulate Matter (PM_{10})	1.35	5.91
Total Particulate Matter (TSP)	3.00	13.14
Sulfur Dioxide (SO_2)		
Volatile Organic Compounds (VOC)		
Hazardous Air Pollutants	Potential Emissions	
	PPH	TPY
Regulated Pollutants other than Criteria and HAP	Potential Emissions	
	PPH	TPY

List the method(s) used to calculate the potential emissions (include dates of any stack tests conducted, versions of software used, source and dates of emission factors, etc.).

PM10 – Emissions estimated using the method described in AP-42 5th Edition, Chapter 13.2.2 and assuming a 50% control efficiency since roadways are sprayed regularly to keep dust down. Particle size multiplier for PM is 0.80. Emission factor = 0.98 lb/VMT x (1-0.50) = 0.49 lb/VMT. Particle size multiplier for PM10 is 0.36. Therefore, PM10 emissions = (0.49 lb/hr)(0.36)/(0.80) = 0.2205 lb/hr.
Conservatively assume PM2.5 is equal to PM10.

TSP – Emissions estimated using the method described in AP-42 5th Edition, Chapter 13.2.2 and assuming a 50% control efficiency since roadways are sprayed regularly to keep dust down. Particle size multiplier for PM is 0.80. Emission factor is 0.98 lb/VMT x (1-0.50) = 0.49 lb/VMT.

Applicable Requirements
List all applicable requirements for this emission unit. For each applicable requirement, include the underlying rule/regulation citation and/or construction permit with the condition number. (*Note: Title V permit condition numbers alone are not the underlying applicable requirements*). If an emission limit is calculated based on the type of source and design capacity or if a standard is based on a design parameter, this information should also be included. No Specific Requirement.
__X__ Permit Shield
For all applicable requirements listed above, provide monitoring/testing/recordkeeping/reporting which shall be used to demonstrate compliance. If the method is based on a permit or rule, include the condition number or citation. (Note: Each requirement listed above must have an associated method of demonstrating compliance. If there is not already a required method in place, then a method must be proposed.) No Specific Requirement.
Are you in compliance with all applicable requirements for this emission unit? __X__Yes ___No If no, complete the **Schedule of Compliance Form** as **ATTACHMENT F**.

ATTACHMENT E - Emission Unit Form

Emission Unit Description

Emission unit ID number:	**Emission unit name:**	**List any control devices associated with this emission unit:**
005-07	Unpaved Roads - Endloaders	NA

Provide a description of the emission unit (type, method of operation, design parameters, etc.):
This emission unit quantifies emissions caused by vehicle traffic occurring during raw material transfer by front-end loaders.

Manufacturer:	**Model number:**	**Serial number:**
NA	NA	NA
Construction date:	**Installation date:**	**Modification date(s):**
NA	NA	NA

Design Capacity (examples: furnaces - tons/hr, tanks - gallons): NA

Maximum Hourly Throughput:	**Maximum Annual Throughput:**	**Maximum Operating Schedule:**
NA	NA	8,760 hr/yr

Fuel Usage Data **(fill out all applicable fields)**

Does this emission unit combust fuel? ___Yes __X__ No	**If yes, is it?** ___ Indirect Fired ___Direct Fired
Maximum design heat input and/or maximum horsepower rating:	**Type and Btu/hr rating of burners:**

List the primary fuel type(s) and if applicable, the secondary fuel type(s). For each fuel type listed, provide the maximum hourly and annual fuel usage for each.

Describe each fuel expected to be used during the term of the permit.

Fuel Type	Max. Sulfur Content	Max. Ash Content	BTU Value

Emissions Data		
Criteria Pollutants	Potential Emissions	
	PPH	TPY
Carbon Monoxide (CO)		
Nitrogen Oxides (NO_X)		
Lead (Pb)		
Particulate Matter ($PM_{2.5}$)	2.19	9.59
Particulate Matter (PM_{10})	2.19	9.59
Total Particulate Matter (TSP)	4.87	21.32
Sulfur Dioxide (SO_2)		
Volatile Organic Compounds (VOC)		
Hazardous Air Pollutants	Potential Emissions	
	PPH	TPY
Regulated Pollutants other than Criteria and HAP	Potential Emissions	
	PPH	TPY

List the method(s) used to calculate the potential emissions (include dates of any stack tests conducted, versions of software used, source and dates of emission factors, etc.).

PM10 – Emissions estimated using the method described in AP-42 5th Edition, Chapter 13.2.2 and assuming a 50% control efficiency since roadways are sprayed regularly to keep dust down. Particle size multiplier for PM is 0.80. Emission factor = 1.59 lb/VMT x (1-0.50) = 0.795 lb/VMT. Particle size multiplier for PM10 is 0.36. Therefore, PM10 emissions = (0.795 lb/hr)(0.36)/(0.80) = 0.35775 lb/hr.
Conservatively assume PM2.5 is equal to PM10.

TSP – Emissions estimated using the method described in AP-42 5th Edition, Chapter 13.2.2 and assuming a 50% control efficiency since roadways are sprayed regularly to keep dust down. Particle size multiplier for PM is 0.80. Emission factor is 1.59 lb/VMT x (1-0.50) = 0.795 lb/VMT.

Applicable Requirements
List all applicable requirements for this emission unit. For each applicable requirement, include the underlying rule/regulation citation and/or construction permit with the condition number. (*Note: Title V permit condition numbers alone are not the underlying applicable requirements*). If an emission limit is calculated based on the type of source and design capacity or if a standard is based on a design parameter, this information should also be included. No Specific Requirement.
__X__ Permit Shield
For all applicable requirements listed above, provide monitoring/testing/recordkeeping/reporting which shall be used to demonstrate compliance. If the method is based on a permit or rule, include the condition number or citation. (Note: Each requirement listed above must have an associated method of demonstrating compliance. If there is not already a required method in place, then a method must be proposed.) No Specific Requirement.
Are you in compliance with all applicable requirements for this emission unit? __X__Yes ___No If no, complete the **Schedule of Compliance Form** as **ATTACHMENT F**.

ATTACHMENT E - Emission Unit Form

Emission Unit Description

Emission unit ID number:	**Emission unit name:**	**List any control devices associated with this emission unit:**
009-01	Crushing and Screening System #1	Baghouses

Provide a description of the emission unit (type, method of operation, design parameters, etc.):
Crushing and Screening System #1 consists of a primary, secondary, and tertiary crushing system and screening operations used to size the ferroalloy according to buyer specifications prior to shipment. Emissions from this operation are controlled by three baghouses operating in parallel.

Manufacturer:	**Model number:**	**Serial number:**
NA	NA	NA
Construction date:	**Installation date:**	**Modification date(s):**
NA	NA	NA

Design Capacity (examples: furnaces - tons/hr, tanks - gallons): 33 tph

Maximum Hourly Throughput:	**Maximum Annual Throughput:**	**Maximum Operating Schedule:**
33 tph	26,439.3 tpy	8,760 hr/yr

Fuel Usage Data **(fill out all applicable fields)**

Does this emission unit combust fuel? ___Yes __X__ No	**If yes, is it?** ___ Indirect Fired ___Direct Fired
Maximum design heat input and/or maximum horsepower rating:	**Type and Btu/hr rating of burners:**

List the primary fuel type(s) and if applicable, the secondary fuel type(s). For each fuel type listed, provide the maximum hourly and annual fuel usage for each.

Describe each fuel expected to be used during the term of the permit.

Fuel Type	Max. Sulfur Content	Max. Ash Content	BTU Value

Emissions Data		
Criteria Pollutants	Potential Emissions	
	PPH	TPY
Carbon Monoxide (CO)		
Nitrogen Oxides (NO_X)		
Lead (Pb)		
Particulate Matter ($PM_{2.5}$)	0.13	0.58
Particulate Matter (PM_{10})	0.13	0.58
Total Particulate Matter (TSP)	0.13	0.58
Sulfur Dioxide (SO_2)		
Volatile Organic Compounds (VOC)		
Hazardous Air Pollutants	Potential Emissions	
	PPH	TPY
Regulated Pollutants other than Criteria and HAP	Potential Emissions	
	PPH	TPY

List the method(s) used to calculate the potential emissions (include dates of any stack tests conducted, versions of software used, source and dates of emission factors, etc.).

PM10 – Crushing System No. 1 which consists of four stages: primary crushing, secondary crushing, tertiary crushing, and screening. An emission factor was obtained for each of the two types of processes from the Ohio EPA Feasibility Study, "Reasonably Available Control Measures for Fugitive Dust Sources" (September 1980), Ohio Environmental Protection Agency, Division of Air Pollution Control. Emission factors are as follows:
7.2 lb/ton processed for each of the crushing operations
4.5 lb/ton for the screening operation
Total EF = (7.2 lb/ton) x 3 + 4.5 lb/ton = 26.1 lb/ton processed. Conservatively assume all PM is PM10 and PM2.5.

TSP - Crushing System No. 1 which consists of four stages: primary crushing, secondary crushing, tertiary crushing, and screening. An emission factor was obtained for each of the two types of processes from the Ohio EPA Feasibility Study, "Reasonably Available Control Measures for Fugitive Dust Sources" (September 1980), Ohio Environmental Protection Agency, Division of Air Pollution Control. Emission factors are as follows:
7.2 lb/ton processed for each of the crushing operations
4.5 lb/ton for the screening operation
Total EF = (7.2 lb/ton) x 3 + 4.5 lb/ton = 26.1 lb/ton processed. Conservatively assume all PM is PM10.

Particulate matter from this system is controlled by three baghouses in parallel. This stream represents one-third of the total emissions from this unit. Therefore, emission factor = (1/3) x 26.1 = 8.7 lb/ton.

Applicable Requirements
List all applicable requirements for this emission unit. For each applicable requirement, include the underlying rule/regulation citation and/or <u>construction permit</u> with the condition number. (*Note: Title V permit condition numbers alone are not the underlying applicable requirements*). If an emission limit is calculated based on the type of source and design capacity or if a standard is based on a design parameter, this information should also be included. See Pages 67 and 68
__X__ Permit Shield
For all applicable requirements listed above, provide monitoring/testing/recordkeeping/reporting which shall be used to demonstrate compliance. If the method is based on a permit or rule, include the condition number or citation. (Note: Each requirement listed above must have an associated method of demonstrating compliance. If there is not already a required method in place, then a method must be proposed.) See Page 69
Are you in compliance with all applicable requirements for this emission unit? __X__Yes ___No If no, complete the **Schedule of Compliance Form** as **ATTACHMENT F**.

ATTACHMENT E - Emission Unit Form

Emission Unit Description

Emission unit ID number:	**Emission unit name:**	**List any control devices associated with this emission unit:**
009-02	Crushing and Screening System #2	Baghouses

Provide a description of the emission unit (type, method of operation, design parameters, etc.):
Crushing and Screening System #2 consists of a primary, secondary, and tertiary crushing system and screening operations used to size the ferroalloy according to buyer specifications prior to shipment. Emissions from this operation are controlled by two baghouses operating in parallel.

Manufacturer:	**Model number:**	**Serial number:**
NA	NA	NA
Construction date:	**Installation date:**	**Modification date(s):**
NA	NA	NA

Design Capacity (examples: furnaces - tons/hr, tanks - gallons): 33 tph

Maximum Hourly Throughput:	**Maximum Annual Throughput:**	**Maximum Operating Schedule:**
33 tph	68,742.1 tpy	8,760 hr/yr

Fuel Usage Data **(fill out all applicable fields)**

Does this emission unit combust fuel? ___Yes __X__ No	**If yes, is it?** ___ Indirect Fired ___Direct Fired
Maximum design heat input and/or maximum horsepower rating:	**Type and Btu/hr rating of burners:**

List the primary fuel type(s) and if applicable, the secondary fuel type(s). For each fuel type listed, provide the maximum hourly and annual fuel usage for each.

Describe each fuel expected to be used during the term of the permit.

Fuel Type	Max. Sulfur Content	Max. Ash Content	BTU Value

Emissions Data		
Criteria Pollutants	Potential Emissions	
	PPH	TPY
Carbon Monoxide (CO)		
Nitrogen Oxides (NO_X)		
Lead (Pb)		
Particulate Matter ($PM_{2.5}$)	0.51	2.24
Particulate Matter (PM_{10})	0.51	2.24
Total Particulate Matter (TSP)	0.51	2.24
Sulfur Dioxide (SO_2)		
Volatile Organic Compounds (VOC)		
Hazardous Air Pollutants	Potential Emissions	
	PPH	TPY
Regulated Pollutants other than Criteria and HAP	Potential Emissions	
	PPH	TPY

List the method(s) used to calculate the potential emissions (include dates of any stack tests conducted, versions of software used, source and dates of emission factors, etc.).

PM10 – Crushing System No. 2 which consists of four stages: primary crushing, secondary crushing, tertiary crushing, and screening. An emission factor was obtained for each of the two types of processes from the Ohio EPA Feasibility Study, "Reasonably Available Control Measures for Fugitive Dust Sources" (September 1980), Ohio Environmental Protection Agency, Division of Air Pollution Control. Emission factors are as follows:
7.2 lb/ton processed for each of the crushing operations
4.5 lb/ton for the screening operation
Total EF = (7.2 lb/ton) x 3 + 4.5 lb/ton = 26.1 lb/ton processed. Conservatively assume all PM is PM10 and PM2.5.
Particulate matter from this system is controlled by two baghouses in parallel. This stream represents half of the total emissions from this unit. Therefore, emission factor = (1/2) x 16.1 = 13.05 lb/ton.

TSP - Crushing System No. 2 which consists of four stages: primary crushing, secondary crushing, tertiary crushing, and screening. An emission factor was obtained for each of the two types of processes from the Ohio EPA Feasibility Study, "Reasonably Available Control Measures for Fugitive Dust Sources" (September 1980), Ohio Environmental Protection Agency, Division of Air Pollution Control. Emission factors are as follows:
7.2 lb/ton processed for each of the crushing operations
4.5 lb/ton for the screening operation
Total EF = (7.2 lb/ton) x 3 + 4.5 lb/ton = 26.1 lb/ton processed. Conservatively assume all PM is PM10.
Particulate matter from this system is controlled by two baghouses in parallel. This stream represents one-third of the total emissions from this unit. Therefore, emission factor = (1/2) x 26.1 = 13.05 lb/ton.

Applicable Requirements
List all applicable requirements for this emission unit. For each applicable requirement, include the underlying rule/regulation citation and/or <u>construction permit</u> with the condition number. (*Note: Title V permit condition numbers alone are not the underlying applicable requirements*). If an emission limit is calculated based on the type of source and design capacity or if a standard is based on a design parameter, this information should also be included. See Pages 67 and 68
__X__ Permit Shield
For all applicable requirements listed above, provide monitoring/testing/recordkeeping/reporting which shall be used to demonstrate compliance. If the method is based on a permit or rule, include the condition number or citation. (Note: Each requirement listed above must have an associated method of demonstrating compliance. If there is not already a required method in place, then a method must be proposed.) See Page 69
Are you in compliance with all applicable requirements for this emission unit? __X__Yes ___No If no, complete the **Schedule of Compliance Form** as **ATTACHMENT F**.

ATTACHMENT E - Emission Unit Form

Emission Unit Description

Emission unit ID number:	**Emission unit name:**	**List any control devices associated with this emission unit:**
009-03	Crushing and Screening System #4	

Provide a description of the emission unit (type, method of operation, design parameters, etc.):
Crushing and Screening System #4 consists of a primary, secondary, and tertiary crushing system and screening operations used to size the ferroalloy according to buyer specifications prior to shipment. Emissions from this operation are controlled by the MagSil Scrubber.

Manufacturer:	**Model number:**	**Serial number:**
NA	NA	NA
Construction date:	**Installation date:**	**Modification date(s):**
NA	NA	NA

Design Capacity (examples: furnaces - tons/hr, tanks - gallons): 20 tph

Maximum Hourly Throughput:	**Maximum Annual Throughput:**	**Maximum Operating Schedule:**
20 tph	66,098.2 tpy	8,760 hr/yr

Fuel Usage Data **(fill out all applicable fields)**

Does this emission unit combust fuel? ___Yes __X__ No	**If yes, is it?** ___ Indirect Fired ___Direct Fired
Maximum design heat input and/or maximum horsepower rating:	**Type and Btu/hr rating of burners:**

List the primary fuel type(s) and if applicable, the secondary fuel type(s). For each fuel type listed, provide the maximum hourly and annual fuel usage for each.

Describe each fuel expected to be used during the term of the permit.

Fuel Type	Max. Sulfur Content	Max. Ash Content	BTU Value

Emissions Data		
Criteria Pollutants	Potential Emissions	
	PPH	TPY
Carbon Monoxide (CO)		
Nitrogen Oxides (NO_X)		
Lead (Pb)		
Particulate Matter ($PM_{2.5}$)	9.85	43.13
Particulate Matter (PM_{10})	9.85	43.13
Total Particulate Matter (TSP)	9.85	43.13
Sulfur Dioxide (SO_2)		
Volatile Organic Compounds (VOC)		
Hazardous Air Pollutants	Potential Emissions	
	PPH	TPY
Regulated Pollutants other than Criteria and HAP	Potential Emissions	
	PPH	TPY

List the method(s) used to calculate the potential emissions (include dates of any stack tests conducted, versions of software used, source and dates of emission factors, etc.).

PM10 – Crushing System No. 4 which consists of four stages: primary crushing, secondary crushing, tertiary crushing, and screening. An emission factor was obtained for each of the two types of processes from the Ohio EPA Feasibility Study, "Reasonably Available Control Measures for Fugitive Dust Sources" (September 1980), Ohio Environmental Protection Agency, Division of Air Pollution Control. Emission factors are as follows:
7.2 lb/ton processed for each of the crushing operations
4.5 lb/ton for the screening operation
Total EF = (7.2 lb/ton) x 3 + 4.5 lb/ton = 26.1 lb/ton processed. Conservatively assume all PM is PM10 and PM2.5.

TSP - Crushing System No. 4 which consists of four stages: primary crushing, secondary crushing, tertiary crushing, and screening. An emission factor was obtained for each of the two types of processes from the Ohio EPA Feasibility Study, "Reasonably Available Control Measures for Fugitive Dust Sources" (September 1980), Ohio Environmental Protection Agency, Division of Air Pollution Control. Emission factors are as follows:
7.2 lb/ton processed for each of the crushing operations
4.5 lb/ton for the screening operation
Total EF = (7.2 lb/ton) x 3 + 4.5 lb/ton = 26.1 lb/ton processed. Conservatively assume all PM is PM10.

Applicable Requirements
List all applicable requirements for this emission unit. For each applicable requirement, include the underlying rule/regulation citation and/or <u>construction permit</u> with the condition number. (*Note: Title V permit condition numbers alone are not the underlying applicable requirements*). If an emission limit is calculated based on the type of source and design capacity or if a standard is based on a design parameter, this information should also be included. See Pages 67 and 68
__X__ Permit Shield
For all applicable requirements listed above, provide monitoring/testing/recordkeeping/reporting which shall be used to demonstrate compliance. If the method is based on a permit or rule, include the condition number or citation. (Note: Each requirement listed above must have an associated method of demonstrating compliance. If there is not already a required method in place, then a method must be proposed.) See Page 69
Are you in compliance with all applicable requirements for this emission unit? __X__Yes ___No If no, complete the **Schedule of Compliance Form** as **ATTACHMENT F**.

ATTACHMENT E - Emission Unit Form

Emission Unit Description

Emission unit ID number:	**Emission unit name:**	**List any control devices associated with this emission unit:**
009-04	Crushing and Screening System #5	

Provide a description of the emission unit (type, method of operation, design parameters, etc.):
Crushing and Screening System #5 consists of a primary, secondary, and tertiary crushing system and screening operations used to size the ferroalloy according to buyer specifications prior to shipment. Emissions from this operation are controlled by the MagSil Scrubber.

Manufacturer:	**Model number:**	**Serial number:**
NA	NA	NA
Construction date:	**Installation date:**	**Modification date(s):**
NA	NA	NA

Design Capacity (examples: furnaces - tons/hr, tanks - gallons): 20 tph

Maximum Hourly Throughput:	**Maximum Annual Throughput:**	**Maximum Operating Schedule:**
20 tph	5,870.3 tpy	8,760 hr/yr

Fuel Usage Data **(fill out all applicable fields)**

Does this emission unit combust fuel? ___Yes __X__ No	**If yes, is it?** ___ Indirect Fired ___Direct Fired
Maximum design heat input and/or maximum horsepower rating:	**Type and Btu/hr rating of burners:**

List the primary fuel type(s) and if applicable, the secondary fuel type(s). For each fuel type listed, provide the maximum hourly and annual fuel usage for each.

Describe each fuel expected to be used during the term of the permit.

Fuel Type	Max. Sulfur Content	Max. Ash Content	BTU Value

Emissions Data		
Criteria Pollutants	Potential Emissions	
	PPH	TPY
Carbon Monoxide (CO)		
Nitrogen Oxides (NO_X)		
Lead (Pb)		
Particulate Matter ($PM_{2.5}$)	0.88	3.84
Particulate Matter (PM_{10})	0.88	3.84
Total Particulate Matter (TSP)	0.88	3.84
Sulfur Dioxide (SO_2)		
Volatile Organic Compounds (VOC)		
Hazardous Air Pollutants	Potential Emissions	
	PPH	TPY
Regulated Pollutants other than Criteria and HAP	Potential Emissions	
	PPH	TPY

List the method(s) used to calculate the potential emissions (include dates of any stack tests conducted, versions of software used, source and dates of emission factors, etc.).

PM10 – Crushing System No. 5 which consists of four stages: primary crushing, secondary crushing, tertiary crushing, and screening. An emission factor was obtained for each of the two types of processes from the Ohio EPA Feasibility Study, "Reasonably Available Control Measures for Fugitive Dust Sources" (September 1980), Ohio Environmental Protection Agency, Division of Air Pollution Control. Emission factors are as follows:
7.2 lb/ton processed for each of the crushing operations
4.5 lb/ton for the screening operation
Total EF = (7.2 lb/ton) x 3 + 4.5 lb/ton = 26.1 lb/ton processed. Conservatively assume all PM is PM10 and PM2.5.

TSP - Crushing System No. 5 which consists of four stages: primary crushing, secondary crushing, tertiary crushing, and screening. An emission factor was obtained for each of the two types of processes from the Ohio EPA Feasibility Study, "Reasonably Available Control Measures for Fugitive Dust Sources" (September 1980), Ohio Environmental Protection Agency, Division of Air Pollution Control. Emission factors are as follows:
7.2 lb/ton processed for each of the crushing operations
4.5 lb/ton for the screening operation
Total EF = (7.2 lb/ton) x 3 + 4.5 lb/ton = 26.1 lb/ton processed. Conservatively assume all PM is PM10.

Applicable Requirements
List all applicable requirements for this emission unit. For each applicable requirement, include the underlying rule/regulation citation and/or <u>construction permit</u> with the condition number. (*Note: Title V permit condition numbers alone are not the underlying applicable requirements*). If an emission limit is calculated based on the type of source and design capacity or if a standard is based on a design parameter, this information should also be included. See Pages 67 and 68
__X__ Permit Shield
For all applicable requirements listed above, provide monitoring/testing/recordkeeping/reporting which shall be used to demonstrate compliance. If the method is based on a permit or rule, include the condition number or citation. (Note: Each requirement listed above must have an associated method of demonstrating compliance. If there is not already a required method in place, then a method must be proposed.) See Page 69
Are you in compliance with all applicable requirements for this emission unit? __X__Yes ___No If no, complete the **Schedule of Compliance Form** as **ATTACHMENT F**.

ATTACHMENT E - Emission Unit Form

Emission Unit Description

Emission unit ID number:	**Emission unit name:**	**List any control devices associated with this emission unit:**
009-06	Transfer Points	NA

Provide a description of the emission unit (type, method of operation, design parameters, etc.):
Emissions from raw material batch drops occurring both outside in the raw material storage area and inside for materials transferred into the building. Emissions were quantified for quartz gravel, coal, wood chips, and limestone.

Manufacturer:	**Model number:**	**Serial number:**
NA	NA	NA
Construction date:	**Installation date:**	**Modification date(s):**
NA	NA	NA

Design Capacity (examples: furnaces - tons/hr, tanks - gallons): 28 tph

Maximum Hourly Throughput:	**Maximum Annual Throughput:**	**Maximum Operating Schedule:**
28 tph	NA	8,760 hr/yr

Fuel Usage Data **(fill out all applicable fields)**

Does this emission unit combust fuel? ___Yes __X__ No	**If yes, is it?** ___ Indirect Fired ___Direct Fired
Maximum design heat input and/or maximum horsepower rating:	**Type and Btu/hr rating of burners:**

List the primary fuel type(s) and if applicable, the secondary fuel type(s). For each fuel type listed, provide the maximum hourly and annual fuel usage for each.

Describe each fuel expected to be used during the term of the permit.

Fuel Type	Max. Sulfur Content	Max. Ash Content	BTU Value

Emissions Data		
Criteria Pollutants	Potential Emissions	
	PPH	TPY
Carbon Monoxide (CO)		
Nitrogen Oxides (NO_X)		
Lead (Pb)		
Particulate Matter ($PM_{2.5}$)	1.58	6.93
Particulate Matter (PM_{10})	1.58	6.93
Total Particulate Matter (TSP)	1.58	6.93
Sulfur Dioxide (SO_2)		
Volatile Organic Compounds (VOC)		
Hazardous Air Pollutants	Potential Emissions	
	PPH	TPY
Regulated Pollutants other than Criteria and HAP	Potential Emissions	
	PPH	TPY

List the method(s) used to calculate the potential emissions (include dates of any stack tests conducted, versions of software used, source and dates of emission factors, etc.).

PM10 – Emissions from raw material batch drops occurring both outside in the raw material storage area and inside for materials transferred into the building. Emissions were quantified for quartz gravel, coal, wood chips, and limestone using the method described in AP-42 5th Edition, Chapter 13.2.2. Emission factors were developed for each material (refer to attached spreadsheets). Conservatively assume all PM is PM10 and PM2.5.

TSP – Emissions from raw material batch drops occurring both outside in the raw material storage area and inside for materials transferred into the building. Emissions were quantified for quartz gravel, coal, wood chips, and limestone using the method described in AP-42 5th Edition, Chapter 13.2.2. Emission factors were developed for each material (refer to attached spreadsheets).

Applicable Requirements
List all applicable requirements for this emission unit. For each applicable requirement, include the underlying rule/regulation citation and/or <u>construction permit</u> with the condition number. (*Note: Title V permit condition numbers alone are not the underlying applicable requirements*). If an emission limit is calculated based on the type of source and design capacity or if a standard is based on a design parameter, this information should also be included. See Pages 67 and 68
__X__ Permit Shield
For all applicable requirements listed above, provide monitoring/testing/recordkeeping/reporting which shall be used to demonstrate compliance. If the method is based on a permit or rule, include the condition number or citation. (Note: Each requirement listed above must have an associated method of demonstrating compliance. If there is not already a required method in place, then a method must be proposed.) See Page 69
Are you in compliance with all applicable requirements for this emission unit? __X__Yes ___No If no, complete the **Schedule of Compliance Form** as **ATTACHMENT F**.

List all applicable requirements for this emission unit. For each applicable requirement, include the underlying rule/regulation citation and/or <u>construction permit</u> with the condition number. (*Note: Title V permit condition numbers alone are not the underlying applicable requirements*). If an emission limit is calculated based on the type of source and design capacity or if a standard is based on a design parameter, this information should also be included.

No.	Rule/ Regulation/ R13 Permit	Existing R30 Permit Condition	Name	Requirement
1	45CSR§§7-3.1 and 3.2	5.1.1.	Opacity	No person shall cause, suffer, allow or permit emission of smoke and/or particulate matter into the open air from any process source operation which is greater than twenty (20) percent opacity, except for smoke and/or particulate matter emitted from any process source operation which is less than forty (40) percent opacity for any period or periods aggregating no more than five (5) minutes in any sixty (60) minute period.
2	45CSR§§7-4.1.(009-06)	5.1.2.	PM Limits	No person shall cause, suffer, allow, or permit PM to be vented into the open air from any type source operation or duplicate source operation, or from all air pollution control equipment installed on any type source operation or duplicate source operation in excess of the quantities specified in this permit. Emission Unit ID 009-06; Equipment Description, Transfer Points; Max. Allowable PM Emission Limit (lb/hr) = 31.24
3	45CSR§7-4.7.a.(009-01, 009-02, 009-03, 009-04 and 00A01).	5.1.3.	Opacity	Type 'b' duplicate source operations whose air pollution control equipment efficiency is a minimum of ninetynine percent (99%) by weight and whose total process weight rate is less than two hundred fifty thousand (250,000) pounds per hour shall be exempted from the requirements of 45CSR§7-4.1 provided that smoke emitted into the open air from any such duplicate source operation is less than twenty percent (20%) opacity.
4	CO-R7-95-13, Condition 7.a.10.A. and CO-R7, 13, 16-93-1, Condition IV.9.	5.1.4.	Water Pressure Monitoring	The permittee shall maintain instrumentation to continuously monitor water pressures at or near each spray nozzle of the wet suppression systems for slag crushing systems. The permittee shall repair or replace any nozzle failing to provide effective flow characteristics at anytime that the slag crushing is in operation.
5	CO-R7-95-13, Condition 7.a.11.B.	5.1.5.	Soderburg Paste Prohibition	The permittee shall not employ soderburg paste to provide refractory lining for any ladle.
6	CO-R7-95-13, Condition 7.a.6.E.	5.1.6.	Repouring	All ladle to ladle repouring of molten material shall be conducted with a system to minimize fugitive emissions.
7	CO-R7-95-13, Condition 7.a.9.A.	5.1.7.	Maintenance	The permittee shall maintain the product crushing and sizing operations in good operating condition.
8	CO-R7-E-2004-13, Condition III.3.	5.1.8.	Casting Station Operations	Within sixty (60) days after restarting the facility, at least one casting station must be fully operational. The station(s) shall be used during all casting at the facility.
9	40CFR§63.1652(e)(2) and 45CSR34.	5.1.9.	Crushing and Screening Equipment.	Crushing and screening equipment. No owner or operator shall cause to be discharged into the atmosphere from any existing piece of equipment associated with crushing and screening exhaust gases containing particulate matter in excess of 0.03 gr/dscf.
10	CO-R7-95-13, Conditions 7.b.1.A. and B.	5.2.1.	VE	The permittee shall conduct visual emission (VE) observations in accordance with Sections 3.2.1. and 3.2.2 of this permit.

List all applicable requirements for this emission unit. For each applicable requirement, include the underlying rule/regulation citation and/or <u>construction permit</u> with the condition number. (*Note: Title V permit condition numbers alone are not the underlying applicable requirements*). If an emission limit is calculated based on the type of source and design capacity or if a standard is based on a design parameter, this information should also be included.

No.	Rule/ Regulation/ R13 Permit	Existing R30 Permit Condition	Name	Requirement
11	40CFR§§63.1656(c)(1), (3)(i) and 45CSR34	5.3.1.	Compliance Demonstration with the Emission Standards	Compliance demonstration with the emission standards. a. The owner or operator must conduct an initial performance test for air pollution control devices or vent stacks subject to Section 5.1.9. of this permit to demonstrate compliance with the applicable emission standards. b. Following development, and approval, if required, of the site-specific test plan, the owner or operator must conduct a performance test for each air pollution control device or vent stack to measure particulate matter and determine compliance with the applicable standard. An owner or operator of sources subject to the particulate matter concentration standards in Section 5.1.9. of this permit must determine the particulate matter concentration using Method 5 or 5D, as applicable. Compliance is demonstrated if the average concentration for the three runs comprising the performance test does not exceed the standard.
12	CO-R7-95-13, Conditions 7.b.3.	5.4.1.	VE	Records of the visible emission checks conducted in accordance with Section 5.2.1. of this permit shall be maintained in accordance with Section 3.2.2. of this permit.
13	CO-R7-95-13, Condition 7.b.2.c.	5.4.2.	Recordkeeping	The permittee shall record on a daily basis the hours of operation and gallons of water used in operation on the slag crushing plant.

For all applicable requirements listed above, provide monitoring/testing/recordkeeping/reporting which shall be used to demonstrate compliance. If the method is based on a permit or rule, include the condition number or citation. (Note: Each requirement listed above must have an associated method of demonstrating compliance. If there is not already a required method in place, then a method must be proposed.)				
No.	**Rule/ Regulation/ R13 Permit**	**Existing R30 Permit Condition**	**Name**	**Method of Compliance**
1	45CSR§§7-3.1 and 3.2	5.1.1.	Opacity	Conduct opacity testing as required.
2	45CSR§§7-4.1.(009-06)	5.1.2.	PM Limits	Stack testing or opacity testing as required.
3	45CSR§7-4.7.a.(009-01, 009-02, 009-03, 009-04 and 00A01).	5.1.3.	Opacity	Stack testing or opacity testing as required.
4	CO-R7-95-13, Condition 7.a.10.A. and CO-R7, 13, 16-93-1, Condition IV.9.	5.1.4.	Water Pressure Monitoring	Maintain instrumentation to continuously monitor water pressure for wet suppression system.
5	CO-R7-95-13, Condition 7.a.11.B.	5.1.5.	Soderburg Paste Prohibition	NA
6	CO-R7-95-13, Condition 7.a.6.E.	5.1.6.	Repouring	NA
7	CO-R7-95-13, Condition 7.a.9.A.	5.1.7.	Maintenance	NA
8	CO-R7-E-2004-13, Condition III.3.	5.1.8.	Casting Station Operations	NA
9	40CFR§63.1652(e)(2) and 45CSR34.	5.1.9.	Crushing and Screening Equipment	Conduct testing as required.
10	CO-R7-95-13, Conditions 7.b.1.A. and B.	5.2.1.	VE	Conduct VE observations as required.
11	40CFR§§63.1656(c)(1), (3)(i) and 45CSR34	5.3.1.	Compliance Demonstration with the Emission Standards	Conduct testing as required.
12	CO-R7-95-13, Conditions 7.b.3.	5.4.1.	VE	Maintain records of VE observations.
13	CO-R7-95-13, Condition 7.b.2.c.	5.4.2.	Recordkeeping	Record hours of operation and gallons of water used in slag crushing operations.

ATTACHMENT E - Emission Unit Form

Emission Unit Description

Emission unit ID number:	**Emission unit name:**	**List any control devices associated with this emission unit:**
Various (See Below Description)	Portable Screener/Crusher	Various

Provide a description of the emission unit (type, method of operation, design parameters, etc.):
Track mounted portable screener/crusher with emission units I.D. (Emission Point I.D.) SC-1C (SC-1CE) Grizzly Feeder, BC-1C (T3C) Screen Reject Belt Conveyor, CR-1C (009-03) Jaw Crusher, BC-2C (T6C) Belt Conveyor, OS-1C (OS-1CE) Unsized Stockpile, and OS-2C (OS-2CE) Sized Stockpile.

Manufacturer:	**Model number:**	**Serial number:**
NA	NA	NA
Construction date:	**Installation date:**	**Modification date(s):**
Proposed	Proposed	NA

Design Capacity (examples: furnaces - tons/hr, tanks - gallons): 400 tph

Maximum Hourly Throughput:	**Maximum Annual Throughput:**	**Maximum Operating Schedule:**
400 tph	90,000 tpy	8,760

Fuel Usage Data **(fill out all applicable fields)**

Does this emission unit combust fuel?	**If yes, is it?**
_X_ Yes ____ No Engine	___ Indirect Fired ___Direct Fired
Maximum design heat input and/or maximum horsepower rating:	**Type and Btu/hr rating of burners:**

List the primary fuel type(s) and if applicable, the secondary fuel type(s). For each fuel type listed, provide the maximum hourly and annual fuel usage for each.

No. 2 Fuel

Describe each fuel expected to be used during the term of the permit.

Fuel Type	Max. Sulfur Content	Max. Ash Content	BTU Value

Emissions Data		
Criteria Pollutants	Potential Emissions	
	PPH	TPY
Carbon Monoxide (CO)		
Nitrogen Oxides (NO_X)		
Lead (Pb)		
Particulate Matter ($PM_{2.5}$)	34.89	3.95
Particulate Matter (PM_{10})	34.89	3.95
Total Particulate Matter (TSP)	73.7	8.37
Sulfur Dioxide (SO_2)		
Volatile Organic Compounds (VOC)		
Hazardous Air Pollutants	Potential Emissions	
	PPH	TPY
Regulated Pollutants other than Criteria and HAP	Potential Emissions	
	PPH	TPY

List the method(s) used to calculate the potential emissions (include dates of any stack tests conducted, versions of software used, source and dates of emission factors, etc.).

Emission factor of 0.5 lb/ton for crushing and screening and AP-42 for transfer points and open stockpiles. Conservatively assume PM2.5 is equal to PM10.

Applicable Requirements
List all applicable requirements for this emission unit. For each applicable requirement, include the underlying rule/regulation citation and/or <u>construction permit</u> with the condition number. (*Note: Title V permit condition numbers alone are not the underlying applicable requirements*). If an emission limit is calculated based on the type of source and design capacity or if a standard is based on a design parameter, this information should also be included. See Pages 79 to 82
___ Permit Shield
For all applicable requirements listed above, provide monitoring/testing/recordkeeping/reporting which shall be used to demonstrate compliance. If the method is based on a permit or rule, include the condition number or citation. (Note: Each requirement listed above must have an associated method of demonstrating compliance. If there is not already a required method in place, then a method must be proposed.) See Pages 83 to 85
Are you in compliance with all applicable requirements for this emission unit? _X_ Yes ___No If no, complete the **Schedule of Compliance Form** as **ATTACHMENT F**.

ATTACHMENT E - Emission Unit Form

Emission Unit Description

Emission unit ID number:	**Emission unit name:**	**List any control devices associated with this emission unit:**
EX-1 with OS-1X	Extruder Unit	FE/N

Provide a description of the emission unit (type, method of operation, design parameters, etc.):

Extruder Unit EX-1 (EX-1E) with Briguette Stockpile OS-1X (OS-1XE) of 5,000 sq. ft.

Manufacturer:	**Model number:**	**Serial number:**
NA	NA	NA
Construction date:	**Installation date:**	**Modification date(s):**
Proposed	Proposed	NA

Design Capacity (examples: furnaces - tons/hr, tanks - gallons): 20 tph

Maximum Hourly Throughput:	**Maximum Annual Throughput:**	**Maximum Operating Schedule:**
20 tph	10,000	8,760

Fuel Usage Data **(fill out all applicable fields)**

Does this emission unit combust fuel? ___Yes __X__ No	**If yes, is it?** ___ Indirect Fired ___Direct Fired
Maximum design heat input and/or maximum horsepower rating:	**Type and Btu/hr rating of burners:**

List the primary fuel type(s) and if applicable, the secondary fuel type(s). For each fuel type listed, provide the maximum hourly and annual fuel usage for each.

Describe each fuel expected to be used during the term of the permit.

Fuel Type	Max. Sulfur Content	Max. Ash Content	BTU Value

Emissions Data		
Criteria Pollutants	Potential Emissions	
	PPH	TPY
Carbon Monoxide (CO)		
Nitrogen Oxides (NO_X)		
Lead (Pb)		
Particulate Matter ($PM_{2.5}$)	0.88	0.17
Particulate Matter (PM_{10})	0.88	0.17
Total Particulate Matter (TSP)	1.85	0.36
Sulfur Dioxide (SO_2)		
Volatile Organic Compounds (VOC)		
Hazardous Air Pollutants	Potential Emissions	
	PPH	TPY
Regulated Pollutants other than Criteria and HAP	Potential Emissions	
	PPH	TPY

List the method(s) used to calculate the potential emissions (include dates of any stack tests conducted, versions of software used, source and dates of emission factors, etc.).

AP-42 for transfer points and stockpiles.
Conservatively assume PM2.5 is equal to PM10.

Applicable Requirements
List all applicable requirements for this emission unit. For each applicable requirement, include the underlying rule/regulation citation and/or <u>construction permit</u> with the condition number. (*Note: Title V permit condition numbers alone are not the underlying applicable requirements*). If an emission limit is calculated based on the type of source and design capacity or if a standard is based on a design parameter, this information should also be included. See Pages 79 to 82
___ Permit Shield
For all applicable requirements listed above, provide monitoring/testing/recordkeeping/reporting which shall be used to demonstrate compliance. If the method is based on a permit or rule, include the condition number or citation. (Note: Each requirement listed above must have an associated method of demonstrating compliance. If there is not already a required method in place, then a method must be proposed.) See Pages 83 to 85
Are you in compliance with all applicable requirements for this emission unit? __X__ Yes ___No If no, complete the **Schedule of Compliance Form** as **ATTACHMENT F**.

ATTACHMENT E - Emission Unit Form

Emission Unit Description

Emission unit ID number:	**Emission unit name:**	**List any control devices associated with this emission unit:**
PT-1 with OS-1P	Pelletizing Unit	FE/N

Provide a description of the emission unit (type, method of operation, design parameters, etc.):

Pelletizing Unit PT-1 (PT-1E) with Pellet Stockpile OS-1P (OS-1PE) of 5,000 sq. ft.

Manufacturer:	**Model number:**	**Serial number:**
NA	NA	NA
Construction date:	**Installation date:**	**Modification date(s):**
2010	2010	NA

Design Capacity (examples: furnaces - tons/hr, tanks - gallons): 6 tph

Maximum Hourly Throughput:	**Maximum Annual Throughput:**	**Maximum Operating Schedule:**
6 tph	10,000 tpy	8,760

Fuel Usage Data **(fill out all applicable fields)**

Does this emission unit combust fuel? ___Yes __X__ No	**If yes, is it?** ___ Indirect Fired ___Direct Fired
Maximum design heat input and/or maximum horsepower rating:	**Type and Btu/hr rating of burners:**

List the primary fuel type(s) and if applicable, the secondary fuel type(s). For each fuel type listed, provide the maximum hourly and annual fuel usage for each.

Describe each fuel expected to be used during the term of the permit.

Fuel Type	Max. Sulfur Content	Max. Ash Content	BTU Value

Emissions Data		
Criteria Pollutants	Potential Emissions	
	PPH	TPY
Carbon Monoxide (CO)		
Nitrogen Oxides (NO_X)		
Lead (Pb)		
Particulate Matter ($PM_{2.5}$)	0.191	0.032
Particulate Matter (PM_{10})	0.191	0.032
Total Particulate Matter (TSP)	0.404	0.074
Sulfur Dioxide (SO_2)		
Volatile Organic Compounds (VOC)		
Hazardous Air Pollutants	Potential Emissions	
	PPH	TPY
Regulated Pollutants other than Criteria and HAP	Potential Emissions	
	PPH	TPY

List the method(s) used to calculate the potential emissions (include dates of any stack tests conducted, versions of software used, source and dates of emission factors, etc.).

AP-42 for transfer points and stockpiles.
Conservatively assume PM2.5 is equal to PM10.

Applicable Requirements
List all applicable requirements for this emission unit. For each applicable requirement, include the underlying rule/regulation citation and/or <u>construction permit</u> with the condition number. (*Note: Title V permit condition numbers alone are not the underlying applicable requirements*). If an emission limit is calculated based on the type of source and design capacity or if a standard is based on a design parameter, this information should also be included. See Pages 79 to 82
___ Permit Shield
For all applicable requirements listed above, provide monitoring/testing/recordkeeping/reporting which shall be used to demonstrate compliance. If the method is based on a permit or rule, include the condition number or citation. (Note: Each requirement listed above must have an associated method of demonstrating compliance. If there is not already a required method in place, then a method must be proposed.) See Pages 83 to 85
Are you in compliance with all applicable requirements for this emission unit? __X__ Yes ___No If no, complete the **Schedule of Compliance Form** as **ATTACHMENT F**.

List all applicable requirements for this emission unit. For each applicable requirement, include the underlying rule/regulation citation and/or <u>construction permit</u> with the condition number. (*Note: Title V permit condition numbers alone are not the underlying applicable requirements*). If an emission limit is calculated based on the type of source and design capacity or if a standard is based on a design parameter, this information should also be included.

No.	Rule/ Regulation/ R13 Permit	Existing R30 Permit Condition	Name	Requirement
1	45CSR13, R13-2857, Condition 4.1.1.	6.1.1.	PM Limits	Emissions from the operations covered under this permit shall not exceed the following: PM/Mn Compounds lb/hr TPY; PM_{10}/Mn Compounds lb/hr TPY Crushing 21.8 2.45 10.31 1.16 Screening 21.8 2.45 10.31 1.16 Pelletizer 0.01 0.01 0.01 0.01 Extruder 0.39 0.10 0.18 0.05 Transfer Points 29.0 3.32 13.71 1.57 Stockpiles 3.36 0.61 1.59 0.29 **Total 76.36 8.94 36.11 4.24**
2	45CSR13, R13-2857, Condition 4.1.2.	6.1.2.	Operating Rate Limit	Total combined throughput of material into the Crusher CR-1C shall not exceed 400 tons per hour nor 90,000 tons per year. Compliance with this limit shall be based on a 12 month rolling total. For the purposes of this permit a 12 month rolling total means the sum of material throughput at the end of any given month for the previous 12 months.
3	45CSR13, R13-2857, Condition 4.1.3.	6.1.3.	Operating Rate Limit	Total combined throughput of material into the Screen SC-1C shall not exceed 400 tons per hour nor 90,000 tons per year. Compliance with this limit shall be based on a 12 month rolling total.
4	45CSR13, R13-2857, Condition 4.1.4.	6.1.4.	Operating Rate Limit	Total combined throughput of material into the Extruder EX-1 shall not exceed 20 tons per hour nor 10,000 tons per year. Compliance with this limit shall be based on a 12 month rolling total.
5	45CSR13, R13-2857, Condition 4.1.5.	6.1.5.	Operating Rate Limit	Total combined throughput of material into the Pelletizer PT-1 shall not exceed 6 tons per hour nor 10,000 tons per year. Compliance with this limit shall be based on a 12 month rolling total.
6	45CSR13, R13-2857, Condition 4.1.6.	6.1.6.	Stockpile Size Limit	The base area of stockpile OS-1C shall not exceed 5,000 sq. ft.
7	45CSR13, R13-2857, Condition 4.1.7.	6.1.7.	Stockpile Size Limit	The base area of stockpile OS-2C shall not exceed 5,000 sq. ft.
8	45CSR13, R13-2857, Condition 4.1.8.	6.1.8.	Stockpile Size Limit	The base area of stockpile OS-1X shall not exceed 5,000 sq. ft.
9	45CSR13, R13-2857, Condition 4.1.9.	6.1.9.	Stockpile Size Limit	The base area of stockpile OS-1P shall not exceed 5,000 sq. ft.
10	45CSR13, R13-2857, Condition 4.1.10.	6.1.10.	Control Requirement	Emissions from Crusher CR-1C and Screen SC-1C shall be controlled by use of a baghouse. Said baghouse shall be designed, installed, operated and maintained so as to achieve a minimum overall efficiency of at least 89%.
11	45CSR13, R13-2857, Condition 4.1.11.	6.1.11.	Control Requirement	The following transfer points shall be controlled by enclosures:T1C, T2C, T4C, T7C, T1P, T3P, T1X and T3X.
12	45CSR13, R13-2857, Condition 4.1.12.	6.1.12.	Control Requirement	Transfer points T3C and T6C shall be controlled by water sprays

List all applicable requirements for this emission unit. For each applicable requirement, include the underlying rule/regulation citation and/or <u>construction permit</u> with the condition number. (*Note: Title V permit condition numbers alone are not the underlying applicable requirements*). If an emission limit is calculated based on the type of source and design capacity or if a standard is based on a design parameter, this information should also be included.

No.	Rule/ Regulation/ R13 Permit	Existing R30 Permit Condition	Name	Requirement
13	45CSR13, R13-2857, Condition 4.1.13.	6.1.13.	Control Requirement	Transfer point T5C shall be controlled by both an enclosure and water sprays.
14	45CSR§7-3.1, 45CSR§7-3.2, and 45CSR13, R13-2857, Condition 4.1.14.	6.1.14.	Opacity	Opacity from any process source operation shall not exceed 20% except for opacity which is less than 40% for a period or periods aggregating no more than 5 minutes in any 60 minute period.
15	45CSR16, 40CFR§§60.672(a) and (b), and 45CSR13-2857, Condition 4.1.16.	6.1.15.	40CFR60 Subpart OOO	When processing limestone, the permittee shall comply with all applicable standards of 40 CFR Part 60, Subpart OOO including but not limited to the following: a. The Crusher CR-1C and Screen SC-1C must both meet a PM limit of 0.014 grain/dscf. b. The transfer points associated with belts BC-1C and BC-2C must meet an opacity limit of 7%.
16	45CSR34, 40CFR§63.1652(e)(1) and 45CSR13, R13-2857, Condition 4.1.17.	6.1.16.	40CFR63 Subpart XXX	When **not** processing limestone, the permittee shall comply with all applicable standards of 40 CFR Part 63, Subpart XXX including Sections 3.1.14., 3.1.15. 3.1.16. of this permit and the following: No owner or operator shall cause to be discharged into the atmosphere from any new or reconstructed piece of equipment associated with crushing and screening exhaust gases containing particulate matter in excess of 50 mg/dscm (0.022 gr/dscf).
17	45CSR§13-5.11. and 45CSR13, R13-2857, Condition 4.1.18. (Baghouses to SC-1C and CR-1C; Water sprays to BC-1C, BC-2C, OS-1C, and OS-2C, Full enclosures on EX-1 and PT-1)	6.1.17.	Operation and Maintenance of Air Pollution Control Equipment	Operation and Maintenance of Air Pollution Control Equipment. The permittee shall, to the extent practicable, install, maintain, and operate all pollution control equipment permitted by R13-2857, and associated monitoring equipment in a manner consistent with safety and good air pollution control practices for minimizing emissions, or comply with any more stringent limits set forth in this permit or as set forth by any State rule, Federal regulation, or alternative control plan approved by the Secretary.
18	45CSR16, 40CFR§§ 60.675(b)(1) and (b)(2) and 45CSR13, R13-2857, Condition 4.2.1.	6.2.1.	Testing Requirement	The permittee shall comply with all applicable testing requirements of 40 CFR Part 60, Subpart OOO including but not limited to the following: The owner or operator shall determine compliance with the PM standards in Section 6.1.15.a. as follows: a. Except as specified in 40 CFR §§ 60.675(e)(3) and (4), Method 5 of Appendix A3 of this part or Method 17 of Appendix A6 of this part shall be used to determine the particulate matter concentration. The sample volume shall be at least 1.70 dscm (60 dscf). For Method 5 (40 CFR part 60, Appendix A3), if the gas stream being sampled is at ambient temperature, the sampling probe and filter may be operated without heaters. If the gas stream is above ambient temperature, the sampling probe and filter may be operated at a temperature high enough, but no higher than 121EC (250EF), to prevent water condensation on the filter. b. Method 9 of Appendix A4 of this part and the procedures in 40 CFR § 60.11 shall be used to determine opacity.
19	45CSR34, 40CFR§ 63.1656(c)(1) and 45CSR13, R13-2857, Condition 4.2.2.	6.2.2.	Testing Requirement	The permittee shall comply with all applicable standards of 40 CFR Part 63, Subpart XXX including but not limited to the following: The owner or operator must conduct an initial performance test for air pollution control devices or vent stacks subject to Section 6.1.16. of this permit to demonstrate compliance with the applicable emission standards.

List all applicable requirements for this emission unit. For each applicable requirement, include the underlying rule/regulation citation and/or <u>construction permit</u> with the condition number. (*Note: Title V permit condition numbers alone are not the underlying applicable requirements*). If an emission limit is calculated based on the type of source and design capacity or if a standard is based on a design parameter, this information should also be included.

No.	Rule/ Regulation/ R13 Permit	Existing R30 Permit Condition	Name	Requirement
20	45CSR13, R13-2857, Condition 4.3.2. (Baghouses to SC-1C and CR-1C; Water sprays to BC-1C, BC-2C, OS-1C, and OS-2C, Full enclosures on EX-1 and PT-1)	6.3.1.	Record of Maintenance of Air Pollution Control Equipment	Record of Maintenance of Air Pollution Control Equipment**.** For all pollution control equipment permitted by R13-2857, the permittee shall maintain accurate records of all required pollution control equipment inspection and/or preventative maintenance procedures.
21	45CSR13, R13-2857, Condition 4.3.3. (Baghouses to SC-1C and CR-1C; Water sprays to BC-1C, BC-2C, OS-1C, and OS-2C, Full enclosures on EX-1 and PT-1)	6.3.2.	Record of Malfunctions of Air Pollution Control Equipment	Record of Malfunctions of Air Pollution Control Equipment. For all air pollution control equipment permitted by R13-2857, the permittee shall maintain records of the occurrence and duration of any malfunction or operational shutdown of the air pollution control equipment during which excess emissions occur. For each such case, the following information shall be recorded: a. The equipment involved. b. Steps taken to minimize emissions during the event. c. The duration of the event. d. The estimated increase in emissions during the event. For each such case associated with an equipment malfunction, the additional information shall also be recorded: e. The cause of the malfunction. f. Steps taken to correct the malfunction. g. Any changes or modifications to equipment or procedures that would help prevent future recurrences of the malfunction.
22	45CSR16, 40CFR§§ 60.674(b) and (c), and 45CSR13, R13-2857, Condition 4.3.4.	6.3.3.	40CFR60 Subpart OOO Monitoring and Recordkeeping	The permittee shall comply with all applicable monitoring and recordkeeping requirements of 40 CFR Part 60, Subpart OOO including but not limited to the following: The owner or operator of any affected facility for which construction, modification, or reconstruction commenced on or after April 22, 2008, that uses wet suppression to control emissions from the affected facility must perform monthly periodic inspections to check that water is flowing to discharge spray nozzles in the wet suppression system. The owner or operator must initiate corrective action within 24 hours and complete corrective action as expediently as practical if the owner or operator finds that water is not flowing properly during an inspection of the water spray nozzles. The owner or operator must record each inspection of the water spray nozzles, including the date of each inspection and any corrective actions taken, in the logbook required under Section 6.4.1. Except as specified in 40 CFR §§ 60.674(d) or (e), the owner or operator of any affected facility for which construction, modification, or reconstruction commenced on or after April 22, 2008, that uses a baghouse to control emissions must conduct quarterly 30-minute visible emissions inspections using EPA Method 22 (40 CFR part 60, Appendix A7). The Method 22 (40 CFR part 60, Appendix A7) test shall be conducted while the baghouse is operating. The test is successful if no visible emissions are observed. If any visible emissions are observed, the owner or operator of the affected facility must initiate corrective action within 24 hours to return the baghouse to normal operation. The owner or operator must record each Method 22 (40 CFR part 60, Appendix A7) test, including the date and any corrective actions taken, in the logbook required under Section 6.4.1. The owner or operator of the affected facility may establish a different baghouse-specific success level for the visible emissions test (other than no visible emissions) by conducting a PM performance test according to 40 CFR § 60.675(b) simultaneously with a Method 22 (40 CFR part 60, Appendix A7) to determine what constitutes normal visible emissions from that affected facility's baghouse when it is in compliance with the applicable PM concentration limit in Table 2 of this subpart. The revised visible emissions success level must be incorporated into the permit for the affected facility.

List all applicable requirements for this emission unit. For each applicable requirement, include the underlying rule/regulation citation and/or <u>construction permit</u> with the condition number. (*Note: Title V permit condition numbers alone are not the underlying applicable requirements*). If an emission limit is calculated based on the type of source and design capacity or if a standard is based on a design parameter, this information should also be included.

No.	Rule/ Regulation/ R13 Permit	Existing R30 Permit Condition	Name	Requirement
23	45CSR34, 40CFR§ 63.1657(a)(1) and 45CSR13, R13-2857, Condition 4.3.5.	6.3.4.	40CFR63 Subpart XXX Monitoring and Recordkeeping	The permittee shall comply with all applicable monitoring and recordkeeping requirements of 40 CFR Part 63, Subpart XXX including Sections 3.2.1., 3.2.3., 3.4.5. and the following: For the baghouses serving the submerged arc furnaces, the metal oxygen refining process, and crushing and screening operations, the owner or operator must observe on a daily basis for the presence of any visible emissions.
24	45CSR13, R13-2857, Condition 4.3.6.	6.3.5.	Monitoring and Recordkeeping	In order to determine compliance with sections 6.1.2. and 6.1.3. of this permit the permittee shall monitor and record the amount of material processed through the screen SC-1C on a monthly basis.
25	45CSR13, R13-2857, Condition 4.3.7.	6.3.6.	Monitoring and Recordkeeping	In order to determine compliance with section 6.1.4. of this permit the permittee shall monitor and record the amount of material processed through the Extruder EX-1 on a monthly basis.
26	45CSR13, R13-2857, Condition 4.3.8.	6.3.7.	Monitoring and Recordkeeping	In order to determine compliance with section 6.1.5. of this permit the permittee shall monitor and record the amount of material processed through the Pelletizer PT-1 on a monthly basis.
27	45CSR16, 40CFR§ 60.676(b)(1), and 45CSR13, R13-2857, Condition 4.4.1.	6.4.1.	40CFR60 Subpart OOO Monitoring and Recordkeeping	The permittee shall comply with all applicable monitoring and recordkeeping requirements of 40 CFR Part 60 Subpart OOO. Owners or operators of affected facilities for which construction, modification, or reconstruction commenced on or after April 22, 2008, must record each periodic inspection required under Section 6.3.3., including dates and any corrective actions taken, in a logbook (in written or electronic format). The owner or operator must keep the logbook onsite and make hard or electronic copies (whichever is requested) of the logbook available to the Administrator upon request.
28	45CSR13, R13-2857, Condition 4.4.2.	6.4.2.	40CFR63 Subpart XXX	The permittee shall comply with all applicable monitoring and recordkeeping requirements of 40CFR Part 63 Subpart XXX including Sections 3.5.13., 3.5.14., and 3.5.15. of this permit.

For all applicable requirements listed above, provide monitoring/testing/recordkeeping/reporting which shall be used to demonstrate compliance. If the method is based on a permit or rule, include the condition number or citation. (Note: Each requirement listed above must have an associated method of demonstrating compliance. If there is not already a required method in place, then a method must be proposed.)				
No.	**Rule/ Regulation/ R13 Permit**	**Existing R30 Permit Condition**	**Name**	**Method of Compliance**
1	45CSR13, R13-2857, Condition 4.1.1.	6.1.1.	PM Limits	NA
2	45CSR13, R13-2857, Condition 4.1.2.	6.1.2.	Operating Rate Limit	12 Month Rolling Total Recordkeeping
3	45CSR13, R13-2857, Condition 4.1.3.	6.1.3.	Operating Rate Limit	12 Month Rolling Total Recordkeeping
4	45CSR13, R13-2857, Condition 4.1.4.	6.1.4.	Operating Rate Limit	12 Month Rolling Total Recordkeeping
5	45CSR13, R13-2857, Condition 4.1.5.	6.1.5.	Operating Rate Limit	12 Month Rolling Total Recordkeeping
6	45CSR13, R13-2857, Condition 4.1.6.	6.1.6.	Stockpile Size Limit	NA
7	45CSR13, R13-2857, Condition 4.1.7.	6.1.7.	Stockpile Size Limit	NA
8	45CSR13, R13-2857, Condition 4.1.8.	6.1.8.	Stockpile Size Limit	NA
9	45CSR13, R13-2857, Condition 4.1.9.	6.1.9.	Stockpile Size Limit	NA
10	45CSR13, R13-2857, Condition 4.1.10.	6.1.10.	Control Requirement	NA
11	45CSR13, R13-2857, Condition 4.1.11.	6.1.11.	Control Requirement	NA
12	45CSR13, R13-2857, Condition 4.1.12.	6.1.12.	Control Requirement	NA
13	45CSR13, R13-2857, Condition 4.1.13.	6.1.13.	Control Requirement	NA
14	45CSR§7-3.1, 45CSR§7-3.2, and 45CSR13, R13-2857, Condition 4.1.14.	6.1.14.	Opacity	Conduct opacity testing as required and maintain records.
15	45CSR16, 40CFR§§60.672(a) and (b), and 45CSR13-2857, Condition 4.1.16.	6.1.15.	40CFR60 Subpart OOO	Conduct testing and opacity testing as required and maintain records.

For all applicable requirements listed above, provide monitoring/testing/recordkeeping/reporting which shall be used to demonstrate compliance. If the method is based on a permit or rule, include the condition number or citation. (Note: Each requirement listed above must have an associated method of demonstrating compliance. If there is not already a required method in place, then a method must be proposed.)				
No.	**Rule/ Regulation/ R13 Permit**	**Existing R30 Permit Condition**	**Name**	**Method of Compliance**
16	45CSR34, 40CFR§63.1652(e)(1) and 45CSR13, R13-2857, Condition 4.1.17.	6.1.16.	40CFR63 Subpart XXX	Conduct testing and opacity testing as required and maintain records.
17	45CSR§13-5.11. and 45CSR13, R13-2857, Condition 4.1.18. (Baghouses to SC-1C and CR-1C; Water sprays to BC-1C, BC-2C, OS-1C, and OS-2C, Full enclosures on EX-1 and PT-1)	6.1.17.	Operation and Maintenance of Air Pollution Control Equipment	NA
18	45CSR16, 40CFR§§ 60.675(b)(1) and (b)(2) and 45CSR13, R13-2857, Condition 4.2.1.	6.2.1.	Testing Requirement	Conduct 40CFR60, Subpart OOO testing as required and maintain records.
19	45CSR34, 40CFR§ 63.1656(c)(1) and 45CSR13, R13-2857, Condition 4.2.2.	6.2.2.	Testing Requirement	Conduct 40CFR63, Subpart XXX testing as required and maintain records.
20	45CSR13, R13-2857, Condition 4.3.2. (Baghouses to SC-1C and CR-1C; Water sprays to BC-1C, BC-2C, OS-1C, and OS-2C, Full enclosures on EX-1 and PT-1)	6.3.1.	Record of Maintenance of Air Pollution Control Equipment	Maintain record of maintenance on air pollution control equipment.
21	45CSR13, R13-2857, Condition 4.3.3. (Baghouses to SC-1C and CR-1C; Water sprays to BC-1C, BC-2C, OS-1C, and OS-2C, Full enclosures on EX-1 and PT-1)	6.3.2.	Record of Malfunctions of Air Pollution Control Equipment	Maintain a record of malfunctions of air pollution control equipment.
22	45CSR16, 40CFR§§ 60.674(b) and (c), and 45CSR13, R13-2857, Condition 4.3.4.	6.3.3.	40CFR60 Subpart OOO Monitoring and Recordkeeping	40CFR60, Subpart OOO monitoring and recordkeeping.
23	45CSR34, 40CFR§ 63.1657(a)(1) and 45CSR13, R13-2857, Condition 4.3.5.	6.3.4.	40CFR63 Subpart XXX Monitoring and Recordkeeping	40CFR63, Subpart XXX monitoring and recordkeeping.

For all applicable requirements listed above, provide monitoring/testing/recordkeeping/reporting which shall be used to demonstrate compliance. If the method is based on a permit or rule, include the condition number or citation. (Note: Each requirement listed above must have an associated method of demonstrating compliance. If there is not already a required method in place, then a method must be proposed.)				
No.	**Rule/ Regulation/ R13 Permit**	**Existing R30 Permit Condition**	**Name**	**Method of Compliance**
24	45CSR13, R13-2857, Condition 4.3.6.	6.3.5.	Monitoring and Recordkeeping	Monitor and record monthly throughput of SC-1C.
25	45CSR13, R13-2857, Condition 4.3.7.	6.3.6.	Monitoring and Recordkeeping	Monitor and record monthly throughput of EX-1.
26	45CSR13, R13-2857, Condition 4.3.8.	6.3.7.	Monitoring and Recordkeeping	Monitor and record monthly throughput of PT-1.
27	45CSR16, 40CFR§ 60.676(b)(1), and 45CSR13, R13-2857, Condition 4.4.1.	6.4.1.	40CFR60 Subpart OOO Monitoring and Recordkeeping	40CFR60, Subpart OOO monitoring and recordkeeping.
28	45CSR13, R13-2857, Condition 4.4.2.	6.4.2.	40CFR63 Subpart XXX	40CFR63, Subpart XXX monitoring and recordkeeping.

ATTACHMENT F
SCHEDULE OF COMPLIANCE

ATTACHMENT F - Schedule of Compliance Form	
Complete this section if you indicated noncompliance with any of the applicable requirements identified in the permit application. For each emission unit which is not in compliance, identify the applicable requirement, the reason(s) for noncompliance, a description of how the source will achieve compliance, and a detailed schedule of compliance. If there is a consent order that applies to this requirement, attach a copy to this form.	
1. **Applicable Requirement** 5.1.8 (Use Casting Station), 3.2.3 (Monitor Pressure Drop in Baghouse)	
Unit(s): Casting Station and Baghouses	**Applicable Requirement:** 5.1.8 and 3.2.3
2. Reason for Noncompliance: Casting without using the casting station due to operational issues with the casting station. Pressure gauges not on baghouse for Crushing System No. 1.	
3. How will Compliance be Achieved? See CO-R34-E-2011-05 Appendix A – Schedule for Compliance (Attached)	
4. Consent Order Number (if applicable): CO-R34-E-2011-05	
5. Schedule of Compliance. Provide a schedule of remedial measures, including an enforceable sequence of actions with milestones, leading to compliance, including a date for final compliance.	
Remedial Measure or Action	Date to be Achieved
See Attached	
6. Submittal of Progress Reports. None	
Content of Progress Report: None	**Report starting date:** None **Submittal frequency:** None

APPENDIX A – SCHEDULE FOR COMPLIANCE

ORDER REFERENCE	COMPLIANCE ACTION	SCHEDULED COMPLETION DATE
Finding 2a. The hood on Furnace #5 was not effectively capturing and/or evacuating emissions to the baghouse. Fugitive particulate emissions were heavier during tapping operations but continued after the tap was completed.	Repairs to the tap hole fan completed by FPI	10-1-2010
	Repairs to the damaged stacks coming out of the furnace.	10-6-2010
	.	
	Perform an air flow feasibility study.	12-21-2010
Finding 2b: Molten metal from Furnace #5 was poured directly to chills without using a casting station.	Repair the #5 Ladle Tilter and Hoods	11-17-2010
	Exhaust hood re-design.	10-31-2010
	Implement engineered modifications for the exhaust hoods	11-17-2010
	Re-design casting nest tilter system.	9-17-2010
	Implement engineered modifications for the casting nest tilter.	11-17-2010
Finding 2c: Fugitive particulate emissions were observed leaking at a joint in the duct work leading from the #2 Furnace to the #2 Bag House. The leak was heavy and constant for an entire tapping period. Fugitive particulate emissions leaking through the joint were heavier during tapping operations but continued after the tap was completed.	Repack the vertical expansion joints above the well on #2 furnace	10-3-2010
Finding 2d: Molten metal from Furnace #2 was poured directly to chills without using a casting station.	Repair the #2 ladle tilter and hoods. Capital Equipment Request was sent to our Corporation for approval on March 7, 2011. Once approval is granted job will be completed in 90 days	
	Implement engineered modifications for the exhaust hoods	
	Implement engineered modifications for the casting nest tilter.	

APPENDIX A (cont.) – SCHEDULE FOR COMPLIANCE

ORDER REFERENCE	COMPLIANCE ACTION	SCHEDULED COMPLETION DATE
Finding 2f: The bag house for sizing system #1 is not equipped with a gauge to provide pressure drop readings across the bag house cell or cells.	Purchase and install gauges and tubing to read the pressure drop across the cells. Unit is currently not operating.	Prior to startup.
Finding 2g: Felman is operating a new screening and picking station to separate remelt material that is introduced to the furnaces for further processing.	Felman will present data and apply for an air permit for the new screening and picking circuit.	No later than 6-1-2011
Finding 5a: Molten metal from Furnace #7 was poured directly to chills without using a casting station.	Repairing the #7 ladle tilter and hoods.	When approval is granted for #2 tilter and the design works we will retrofit #5 and #7 as designed
	Implement engineered modifications for the exhaust hoods	
	Implement engineered modifications for the casting nest tilter.	

ATTACHMENT G
AIR POLLUTION CONTROL DEVICE FORMS

ATTACHMENT G - Air Pollution Control Device Form

Control device ID number: 000A	**List all emission units associated with this control device.** Crushing Operations	
Manufacturer: Joy Manufacturing Company	**Model number:** NA	**Installation date:** 1982

Type of Air Pollution Control Device:

___ Baghouse/Fabric Filter ___ Venturi Scrubber ___ Multiclone

___ Carbon Bed Adsorber ___ Packed Tower Scrubber ___ Single Cyclone

___ Carbon Drum(s) _X_ Other Wet Scrubber ___ Cyclone Bank

___ Catalytic Incinerator ___ Condenser ___ Settling Chamber

___ Thermal Incinerator ___ Flare ___ Other (describe) _____

___ Wet Plate Electrostatic Precipitator ___ Dry Plate Electrostatic Precipitator

List the pollutants for which this device is intended to control and the capture and control efficiencies.

Pollutant	Capture Efficiency	Control Efficiency
PM10	100	95
TSP	100	95
Metals	100	95

Explain the characteristic design parameters of this control device (flow rates, pressure drops, number of bags, size, temperatures, etc.).

Scrubber is a low-pressure impingement-type scrubber used to control the dust generated from the magnesium-silicon (magsil) ferroalloy crushing operations. Plant personnel estimate the control efficiency to be 99 percent. A control efficiency of 95 percent has conservatively been assumed.

The liquid recirculation of the scrubber is 90 gpm and the wastewater blowdown rate is 10 gpm.

Pressure Drop – 6 to 10 inches of H2), Gas temp – 68 degrees F

Is this device subject to the CAM requirements of 40 C.F.R. 64? ___ Yes _X_ No

If Yes, **Complete ATTACHMENT H**

If No**, Provide justification.**

Describe the parameters monitored and/or methods used to indicate performance of this control device.

Recirculation rate

ATTACHMENT G - Air Pollution Control Device Form

Control device ID number: 000D	**List all emission units associated with this control device.** Crusher System No. 1	
Manufacturer: Wheelabrator	**Model number:** NA	**Installation date:** 1952

Type of Air Pollution Control Device:

_X_ Baghouse/Fabric Filter	___ Venturi Scrubber	___ Multiclone
___ Carbon Bed Adsorber	___ Packed Tower Scrubber	___ Single Cyclone
___ Carbon Drum(s)	___ Other Wet Scrubber	___ Cyclone Bank
___ Catalytic Incinerator	___ Condenser	___ Settling Chamber
___ Thermal Incinerator	___ Flare	___ Other (describe) _____
___ Wet Plate Electrostatic Precipitator		___ Dry Plate Electrostatic Precipitator

List the pollutants for which this device is intended to control and the capture and control efficiencies.

Pollutant	Capture Efficiency	Control Efficiency
PM10	100	99.5
TSP	100	99.5
Metals	100	99.5

Explain the characteristic design parameters of this control device (flow rates, pressure drops, number of bags, size, temperatures, etc.).
This control device represents one of three baghouses operating parallel to one another.
Pressure Drop – 3 to 7 inches of H20
Flow rate – 8,000 scfm
Gas temp – 70 degrees F

Is this device subject to the CAM requirements of 40 C.F.R. 64? ___ Yes _X_ No

If Yes, **Complete ATTACHMENT H**

If No**, Provide justification.**

Describe the parameters monitored and/or methods used to indicate performance of this control device.

Pressure Drop

ATTACHMENT G - Air Pollution Control Device Form

Control device ID number: 000E	**List all emission units associated with this control device.** Crusher System No. 1	
Manufacturer: American Air Filter	**Model number:** NA	**Installation date:** 1952

Type of Air Pollution Control Device:

_X_ Baghouse/Fabric Filter ___ Venturi Scrubber ___ Multiclone

___ Carbon Bed Adsorber ___ Packed Tower Scrubber ___ Single Cyclone

___ Carbon Drum(s) ___ Other Wet Scrubber ___ Cyclone Bank

___ Catalytic Incinerator ___ Condenser ___ Settling Chamber

___ Thermal Incinerator ___ Flare ___ Other (describe) _____

___ Wet Plate Electrostatic Precipitator ___ Dry Plate Electrostatic Precipitator

List the pollutants for which this device is intended to control and the capture and control efficiencies.

Pollutant	Capture Efficiency	Control Efficiency
PM10	100	99.5
TSP	100	99.5
Metals	100	99.5

Explain the characteristic design parameters of this control device (flow rates, pressure drops, number of bags, size, temperatures, etc.).
This control device represents one of three baghouses operating parallel to one another.

Is this device subject to the CAM requirements of 40 C.F.R. 64? ___ Yes __X__ No

If Yes, **Complete ATTACHMENT H**

If No**, Provide justification.**

Describe the parameters monitored and/or methods used to indicate performance of this control device.
Pressure Drop

ATTACHMENT G - Air Pollution Control Device Form

Control device ID number: 000F	**List all emission units associated with this control device.** Crusher System No. 2	
Manufacturer: American Air Filter	**Model number:** NA	**Installation date:** 1980

Type of Air Pollution Control Device:

_X_ Baghouse/Fabric Filter	___ Venturi Scrubber	___ Multiclone
___ Carbon Bed Adsorber	___ Packed Tower Scrubber	___ Single Cyclone
___ Carbon Drum(s)	___ Other Wet Scrubber	___ Cyclone Bank
___ Catalytic Incinerator	___ Condenser	___ Settling Chamber
___ Thermal Incinerator	___ Flare	___ Other (describe) _____
___ Wet Plate Electrostatic Precipitator		___ Dry Plate Electrostatic Precipitator

List the pollutants for which this device is intended to control and the capture and control efficiencies.

Pollutant	Capture Efficiency	Control Efficiency
PM10	100	99.5
TSP	100	99.5
Metals	100	99.5

Explain the characteristic design parameters of this control device (flow rates, pressure drops, number of bags, size, temperatures, etc.).
This control devise represents one of two baghouses operating parallel to one another.
Pressure Drop – 3 to 7 inches of H20
Gas Flow Rate – 6,000 scfm
Gas temp – 70 degrees F

Is this device subject to the CAM requirements of 40 C.F.R. 64? ___ Yes _X_ No

If Yes, **Complete ATTACHMENT H**

If No**, Provide justification.**

Describe the parameters monitored and/or methods used to indicate performance of this control device.
Pressure Drop

ATTACHMENT G - Air Pollution Control Device Form

Control device ID number: 0002	**List all emission units associated with this control device.** Furnace No. 2	
Manufacturer: NA	**Model number:** NA	**Installation date:** 1973

Type of Air Pollution Control Device:

_X_ Baghouse/Fabric Filter	___ Venturi Scrubber	___ Multiclone
___ Carbon Bed Adsorber	___ Packed Tower Scrubber	___ Single Cyclone
___ Carbon Drum(s)	___ Other Wet Scrubber	___ Cyclone Bank
___ Catalytic Incinerator	___ Condenser	___ Settling Chamber
___ Thermal Incinerator	___ Flare	___ Other (describe) _____
___ Wet Plate Electrostatic Precipitator		___ Dry Plate Electrostatic Precipitator

List the pollutants for which this device is intended to control and the capture and control efficiencies.

Pollutant	Capture Efficiency	Control Efficiency
PM10	100	99.5
TSP	100	99.5
Metals	100	99.5

Explain the characteristic design parameters of this control device (flow rates, pressure drops, number of bags, size, temperatures, etc.).

Baghouse contains 11 compartments, each with 256 bags for a total 2,816 bags. Each compartment can be isolated for cleaning (approximate cleaning time 33 minutes per compartment). Air to cloth ratio is 2.05.
Pressure Drop – 8 to 12 inches of H20
Flow rate – 45,000 scfm
Gas temp – 330 degrees F

Is this device subject to the CAM requirements of 40 C.F.R. 64? ___ Yes _X_ No

If Yes, **Complete ATTACHMENT H**

If No**, Provide justification.**

Describe the parameters monitored and/or methods used to indicate performance of this control device.

Pressure Drop

ATTACHMENT G - Air Pollution Control Device Form

Control device ID number: 0003	**List all emission units associated with this control device.** No. 5 Furnace	
Manufacturer: American Air Filter	**Model number:** NA	**Installation date:** 1973

Type of Air Pollution Control Device:

_X_ Baghouse/Fabric Filter ___ Venturi Scrubber ___ Multiclone

___ Carbon Bed Adsorber ___ Packed Tower Scrubber ___ Single Cyclone

___ Carbon Drum(s) ___ Other Wet Scrubber ___ Cyclone Bank

___ Catalytic Incinerator ___ Condenser ___ Settling Chamber

___ Thermal Incinerator ___ Flare ___ Other (describe) _____

___ Wet Plate Electrostatic Precipitator ___ Dry Plate Electrostatic Precipitator

List the pollutants for which this device is intended to control and the capture and control efficiencies.

Pollutant	Capture Efficiency	Control Efficiency
PM10	100	99.5
TSP	100	99.5
Metals	100	99.5

Explain the characteristic design parameters of this control device (flow rates, pressure drops, number of bags, size, temperatures, etc.).
Baghouse contains 7 compartments, each with 256 bags for a total 1792 bags. Each compartment can be isolated. Bags are cleaned with reverse air provided by a 300 hp fan (cleaning time is approximately 21 minutes per compartment). Air to cloth ratio is 2.05.
Pressure Drop – 8 to 12 inches of H20, flow rate – 24,000 scfm, Gas temp – 330 degrees F
Designed for 99.5% removal efficiency. Efficiency is noted as zero since emissions were estimated based on stack tests performed on baghouse outlet.

Is this device subject to the CAM requirements of 40 C.F.R. 64? ___ Yes _X_ No

If Yes, **Complete ATTACHMENT H**

If No**, Provide justification.**

Describe the parameters monitored and/or methods used to indicate performance of this control device.
Pressure Drop.

ATTACHMENT G - Air Pollution Control Device Form

Control device ID number: 0004	**List all emission units associated with this control device.** No. 7 Furnace	
Manufacturer: American Air Filter	**Model number:** NA	**Installation date:** 1973

Type of Air Pollution Control Device:

_X_ Baghouse/Fabric Filter ___ Venturi Scrubber ___ Multiclone

___ Carbon Bed Adsorber ___ Packed Tower Scrubber ___ Single Cyclone

___ Carbon Drum(s) ___ Other Wet Scrubber ___ Cyclone Bank

___ Catalytic Incinerator ___ Condenser ___ Settling Chamber

___ Thermal Incinerator ___ Flare ___ Other (describe) _____

___ Wet Plate Electrostatic Precipitator ___ Dry Plate Electrostatic Precipitator

List the pollutants for which this device is intended to control and the capture and control efficiencies.

Pollutant	Capture Efficiency	Control Efficiency
PM10	100	99.5
TSP	100	99.5
Metals	100	99.5

Explain the characteristic design parameters of this control device (flow rates, pressure drops, number of bags, size, temperatures, etc.).
Baghouse contains 7 compartments, each with 256 bags for a total 1792 bags. Each compartment can be isolated. Bags are cleaned with reverse air provided by a 300 hp fan (cleaning time is approximately 21 minutes per compartment). Air to cloth ratio is 2.05.
Pressure Drop – 8 to 12 inches of H20, flow rate – 24,000 scfm, Gas temp – 330 degrees F
Designed for 99.5% removal efficiency. Efficiency is noted as zero since emissions were estimated based on stack tests performed on baghouse outlet.

Is this device subject to the CAM requirements of 40 C.F.R. 64? ___ Yes _X_ No

If Yes, **Complete ATTACHMENT H**

If No**, Provide justification.**

Describe the parameters monitored and/or methods used to indicate performance of this control device.
Pressure Drop

ATTACHMENT G - Air Pollution Control Device Form

Control device ID number: 0006	**List all emission units associated with this control device.** Crushing System No. 1	
Manufacturer: Wheelabrator	**Model number:** NA	**Installation date:** 1952

Type of Air Pollution Control Device:

_X_ Baghouse/Fabric Filter ___ Venturi Scrubber ___ Multiclone

___ Carbon Bed Adsorber ___ Packed Tower Scrubber ___ Single Cyclone

___ Carbon Drum(s) ___ Other Wet Scrubber ___ Cyclone Bank

___ Catalytic Incinerator ___ Condenser ___ Settling Chamber

___ Thermal Incinerator ___ Flare ___ Other (describe) _____

___ Wet Plate Electrostatic Precipitator ___ Dry Plate Electrostatic Precipitator

List the pollutants for which this device is intended to control and the capture and control efficiencies.

Pollutant	Capture Efficiency	Control Efficiency
PM10	100	99.5
TSP	100	99.5
Metals	100	99.5

Explain the characteristic design parameters of this control device (flow rates, pressure drops, number of bags, size, temperatures, etc.).
This control device represents one of two baghouses operating parallel to one another.
Pressure Drop – 3 to 7 inches of H20
Flow rate – 8,000 scfm
Gas temp – 70 degrees F

Is this device subject to the CAM requirements of 40 C.F.R. 64? ___ Yes _X_ No

If Yes, **Complete ATTACHMENT H**

If No**, Provide justification.**

Describe the parameters monitored and/or methods used to indicate performance of this control device.
Pressure Drop

ATTACHMENT G - Air Pollution Control Device Form

Control device ID number: 0008	**List all emission units associated with this control device.** Crushing System No. 2	
Manufacturer: Norblo	**Model number:** NA	**Installation date:** 1968

Type of Air Pollution Control Device:

_X_ Baghouse/Fabric Filter ___ Venturi Scrubber ___ Multiclone

___ Carbon Bed Adsorber ___ Packed Tower Scrubber ___ Single Cyclone

___ Carbon Drum(s) ___ Other Wet Scrubber ___ Cyclone Bank

___ Catalytic Incinerator ___ Condenser ___ Settling Chamber

___ Thermal Incinerator ___ Flare ___ Other (describe) _____

___ Wet Plate Electrostatic Precipitator ___ Dry Plate Electrostatic Precipitator

List the pollutants for which this device is intended to control and the capture and control efficiencies.

Pollutant	Capture Efficiency	Control Efficiency
PM10	100	99.5
TSP	100	99.5
Metals	100	99.5

Explain the characteristic design parameters of this control device (flow rates, pressure drops, number of bags, size, temperatures, etc.).
This control device represents one of two baghouses operating parallel to one another.
Pressure Drop – 3 to 7 inches of H20
Flow rate – 10,000 scfm
Gas temp – 70 degrees F

Is this device subject to the CAM requirements of 40 C.F.R. 64? ___ Yes _X_ No

If Yes, **Complete ATTACHMENT H**

If No**, Provide justification.**

Describe the parameters monitored and/or methods used to indicate performance of this control device.

Pressure Drop

ATTACHMENT H
COMPLIANCE ASSURANCE MONITORING (CAM) FORMS

ATTACHMENT H - Compliance Assurance Monitoring (CAM) Plan Form

For definitions and information about the CAM rule, please refer to 40 CFR Part 64. Additional information (including guidance documents) may also be found at http://www.epa.gov/ttn/emc/cam.html

CAM APPLICABILITY DETERMINATION

1) Does the facility have a PSEU (Pollutant-Specific Emissions Unit considered separately with respect to **EACH** regulated air pollutant) that is subject to CAM (40 CFR Part 64), which must be addressed in this CAM plan submittal? To determine applicability, a PSEU must meet **all** of the following criteria (*If No, then the remainder of this form need not be completed*):

☐ YES ☒ NO

See following page for explanation

a. The PSEU is located at a major source that is required to obtain a Title V permit;

b. The PSEU is subject to an emission limitation or standard for the applicable regulated air pollutant that is NOT exempt;
LIST OF EXEMPT EMISSION LIMITATIONS OR STANDARDS:
- NSPS (40 CFR Part 60) or NESHAP (40 CFR Parts 61 and 63) proposed after 11/15/1990.
- Stratospheric Ozone Protection Requirements.
- Acid Rain Program Requirements.
- Emission Limitations or Standards for which a WVDEP Division of Air Quality Title V permit specifies a continuous compliance determination method, as defined in 40 CFR §64.1.
- An emission cap that meets the requirements specified in 40 CFR §70.4(b)(12).

c. The PSEU uses an add-on control device (as defined in 40 CFR §64.1) to achieve compliance with an emission limitation or standard;

d. The PSEU has potential pre-control device emissions of the applicable regulated air pollutant that are equal to or greater than the Title V Major Source Threshold Levels; AND

e. The PSEU is NOT an exempt backup utility power emissions unit that is municipally-owned.

BASIS OF CAM SUBMITTAL

2) Mark the appropriate box below as to why this CAM plan is being submitted as part of an application for a Title V permit:

☐ RENEWAL APPLICATION. **ALL** PSEUs for which a CAM plan has NOT yet been approved need to be addressed in this CAM plan submittal.

☐ INITIAL APPLICATION (submitted after 4/20/98). **ONLY** large PSEUs (i. e., PSEUs with potential post-control device emissions of an applicable regulated air pollutant that are equal to or greater than Major Source Threshold Levels) need to be addressed in this CAM plan submittal.

☐ SIGNIFICANT MODIFICATION TO LARGE PSEUs. **ONLY** large PSEUs being modified after 4/20/98 need to be addressed in this cam plan submittal. For large PSEUs with an approved CAM plan, Only address the appropriate monitoring requirements affected by the significant modification.

40CFR64 – Compliance Assurance Monitoring (CAM). The Electric Arc Furnaces are subject to SO_2 limits in accordance with 45CSR10, however there are no control devices used to comply with the limit, thus the Furnaces are not pollutant specific emissions units (PSEUs) for SO_2 in accordance with 40 CFR §64.2(a)(2). The Electric Arc Furnaces, the crushing and screening equipment, and fugitive dust sources are subject to the Ferroalloys Production MACT which regulates PM emissions, therefore these sources are not subject to CAM for PM in accordance with 40 CFR §64.2(b)(1)(i).