ENERVEST

7/24/2015

WEST VIRGINIA
DEPARTMENT OF ENVIRONMENTAL PROTECTION
DIVISION OF AIR QUALITY
601 57th Street, SE
Charleston, WV 25304

Subject: EnerVest Operating Compression Downsizing Project Clear Fork Compressor Station (G35-A016).

Dear Sir or Madame,

We are removing the remaining 2 Caterpillar G3516 rated at 1265HP currently at this facility and placing a Caterpillar G3512 TALE rated at 1004 HP and a Caterpillar G3508 TALE rated 670 HP at this facility. Since this facility already has a permit I would like to request an administrative update it to remove the current units. Please find the emissions included. If you have any additional questions please feel free to call me at 304-414-8171 or email me at mdearing@enervest.net.

Sincerely,

Michael Dearing
Air Emissions Supervisor

WEST VIRGINIA
DEPARTMENT OF ENVIRONMENTAL PROTECTION
DIVISION OF AIR QUALITY
601 57th Street, SE
Charleston, WV 25304
Phone: (304) 926-0475
www.dep.wv.gov/daq

PERMIT DETERMINATION FORM (PDF)

FOR AGENCY USE ONLY: PLANT I.D. # _____

PDF # _____ PERMIT WRITER: _____

1. NAME OF APPLICANT (AS REGISTERED WITH THE WV SECRETARY OF STATE'S OFFICE):
Enervest Operating

2. NAME OF FACILITY (IF DIFFERENT FROM ABOVE):
Clear Fork Compressor Station

3. NORTH AMERICAN INDUSTRY CLASSIFICATION SYSTEM (NAICS) CODE:
211111

4A. MAILING ADDRESS: 300 Capitol St #200, Charleston, WV 25301

4B. PHYSICAL ADDRESS: 37.8942638, -81.91328

5A. DIRECTIONS TO FACILITY (PLEASE PROVIDE MAP AS ATTACHMENT A):

5B. NEAREST ROAD: Clear Fork Rd

5C. NEAREST CITY OR TOWN: Crany

5D. COUNTY: Wyoming

5E. UTM NORTHING (KM): 4177.095

5F. UTM EASTING (KM): 455.318

5G. UTM ZONE: 17S

6A. INDIVIDUAL TO CONTACT IF MORE INFORMATION IS REQUIRED: Michael Dearing

6B. TITLE: Supervisor – Air Emissions

6C. TELEPHONE: 304-414-8171

6D. FAX:

6E. E-MAIL: mdearing@enervest.net

7A. DAQ PLANT I.D. NO. (FOR AN EXISTING FACILITY ONLY): G35-A016

7B. PLEASE LIST ALL CURRENT 45CSR13, 45CSR14, 45CSR19 AND/OR TITLE V (45CSR30) PERMIT NUMBERS ASSOCIATED WITH THIS PROCESS (FOR AN EXISTING FACILITY ONLY):

7C. IS THIS PDF BEING SUBMITTED AS THE RESULT OF AN ENFORCEMENT ACTION? IF YES, PLEASE LIST:

8A. TYPE OF EMISSION SOURCE (CHECK ONE):
☐ NEW SOURCE ☒ ADMINISTRATIVE UPDATE
☐ MODIFICATION ☐ OTHER (PLEASE EXPLAIN IN 11B)

8B. IF ADMINISTRATIVE UPDATE, DOES DAQ HAVE THE APPLICANT'S CONSENT TO UPDATE THE EXISTING PERMIT WITH THE INFORMATION CONTAINED HEREIN?
☒ YES ☐ NO

9. IS *DEMOLITION* OR PHYSICAL *RENOVATION* AT AN EXISTING FACILITY INVOLVED? ☒ YES ☐ NO

10A. DATE OF ANTICIPATED INSTALLATION OR CHANGE: 08/15/2015

10B. DATE OF ANTICIPATED START-UP: 08/20/2015

11A. PLEASE PROVIDE A DETAILED PROCESS FLOW DIAGRAM SHOWING EACH PROPOSED OR MODIFIED PROCESS EMISSION POINT AS ATTACHMENT B.

11B. PLEASE PROVIDE A DETAILED PROCESS DESCRIPTION AS ATTACHMENT C.

12. PLEASE PROVIDE MATERIAL SAFETY DATA SHEETS (MSDS) FOR ALL MATERIALS PROCESSED, USED OR PRODUCED AS ATTACHMENT D. FOR CHEMICAL PROCESSE, PLEASE PROVIDE A MSDS FOR EACH COMPOUND EMITTED TO AIR.

13A. REGULATED AIR POLLUTANT EMISSIONS:

⇒ **FOR A NEW FACILITY, PLEASE PROVIDE PLANT WIDE EMISSIONS BASED ON THE POTENTIAL TO EMIT (PTE) FOR THE FOLLOWING AIR POLLUTANTS INCLUDING ALL PROCESSES.**

⇒ **FOR AN EXISTING FACILITY, PLEASE PROVIDE THE PROPOSED CHANGE IN EMISSIONS BASED ON THE PTE OF ALL PROCESS CHANGES FOR THE FOLLOWING AIR POLLUTANTS.**

PTE FOR A GIVEN POLLUTANT IS TYPICALLY BEFORE AIR POLLUTION CONTROL DEVICES AND IS COLLECTED BASED ON THE MAXIMUM DESIGN CAPACITY OF PROCESS EQUIPMENT.

POLLUTANT	HOURLY PTE (LB/HR)	YEARLY PTE (TON/YR) (HOURLY PTE MULTIPLIED BY 8760 HR/YR) DIVIDED BY 2000 LB/TON
PM	0.123	0.54
PM_{10}	0.001	0.004
VOCs	1.11	4.85
CO	7.388	32.36
NO_x	7.38	32.33
SO_2	0.007	0.032
Pb	0	0
HAPs (AGGREGATE AMOUNT)	0.656	2.874
TAPs (INDIVIDUALLY)*	0	0
OTHER (INDIVIDUALLY)*	0	0

* ATTACH ADDITIONAL PAGES AS NEEDED

13B. PLEASE PROVIDE ALL SUPPORTING CALCULATIONS AS ATTACHMENT E.

CALCULATE AN HOURLY AND YEARLY PTE OF EACH PROCESS EMISSION POINT (SHOWN IN YOUR DETAILED PROCESS FLOW DIAGRAM) FOR ALL AIR POLLUTANTS LISTED ABOVE INCLUDING INDIVIDUAL HAP'S (LISTED IN SECTION 112[b] OF THE 1990 CAAA), TAP'S (LISTED IN 45CSR27), AND OTHER AIR POLLUTANTS (E.G. POLLUTANTS LISTED IN TABLE 45-13A OF 45CSR13, MINERAL ACIDS PER 45CSR7, ETC.).

14. CERTIFICATION OF DATA

I, JIM MCKINNEY (*TYPE NAME*) ATTEST THAT ALL THE REPRESENTATIONS CONTAINED IN THIS APPLICATION, OR APPENDED HERETO, ARE TRUE, ACCURATE, AND COMPLETE TO THE BEST OF MY KNOWLEDGE BASED ON INFORMATION AND BELIEF AFTER REASONABLE INQUIRY, AND THAT I AM A *RESPONSIBLE OFFICIAL*** (*PRESIDENT, VICE PRESIDENT, SECRETARY OR TREASURER, GENERAL PARTNER OR SOLE PROPRIETOR*) OF THE APPLICANT.

SIGNATURE OF RESPONSIBLE OFFICIAL: _____

TITLE: Senior Vice President

DATE: 8 / 6 / 15

** THE DEFINITION OF THE PHRASE '*RESPONSIBLE OFFICIAL*' CAN BE FOUND AT 45CSR13, SECTION 2.23.

NOTE: PLEASE CHECK ENCLOSED ATTACHMENTS:

☐ ATTACHMENT A ☐ ATTACHMENT B ☐ ATTACHMENT C ☐ ATTACHMENT D ☐ ATTACHMENT E

RECORDS ON ALL CHANGES ARE REQUIRED TO BE KEPT AND MAINTAINED ON-SITE FOR TWO (2) YEARS.

THE PERMIT DETERMINATION FORM WITH THE INSTRUCTIONS CAN BE FOUND ON DAQ'S PERMITTING SECTION WEB SITE:

www.dep.wv.gov/daq

Attachment A

Clear Fork Map
Legend
Clear Fork Compressor Station
Feature 1
Head northeast on Clear Fork Rd
Route
LCHC 102
WPHC 206
Head northeast on Clear Fork Rd
Clear Fork Compressor Station
Google earth
© 2015 Google
N
4000 ft

A Clear Fork Rd, Oceana, WV 24870

B Rockhouse Fork

Clear Fork Rd

1.6 miles, 4 min

A **Clear Fork Rd**

1. **Head northeast on Clear Fork Rd**

   1.6 mi

B **Rockhouse Fork**

Attachment B

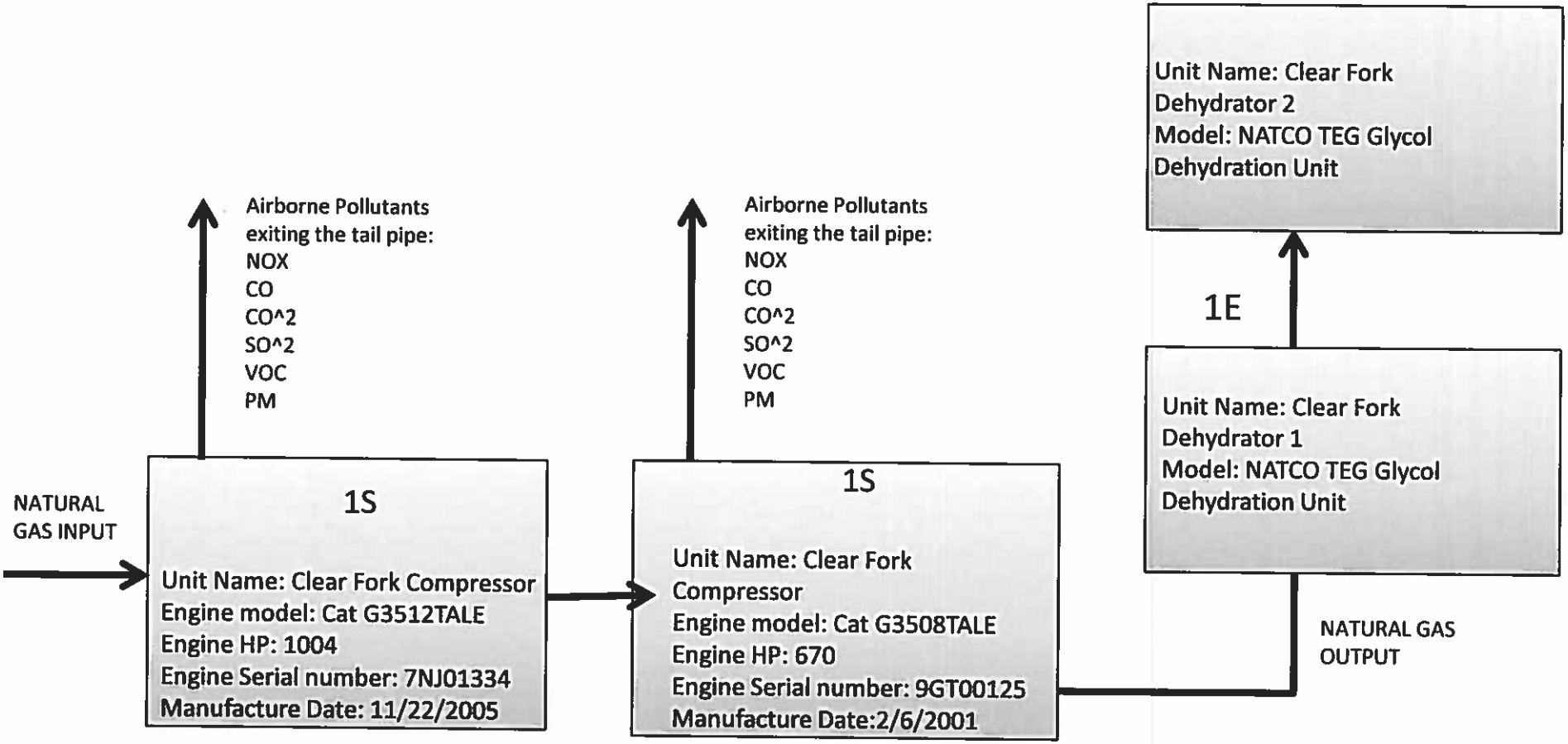
NATURAL GAS INPUT
Airborne Pollutants exiting the tail pipe:
NOX
CO
CO^2
SO^2
VOC
PM
1S
Unit Name: Clear Fork Compressor
Engine model: Cat G3512TALE
Engine HP: 1004
Engine Serial number: 7NJ01334
Manufacture Date: 11/22/2005
Airborne Pollutants exiting the tail pipe:
NOX
CO
CO^2
SO^2
VOC
PM
1S
Unit Name: Clear Fork Compressor
Engine model: Cat G3508TALE
Engine HP: 670
Engine Serial number: 9GT00125
Manufacture Date:2/6/2001
1E
Unit Name: Clear Fork Dehydrator 1
Model: NATCO TEG Glycol Dehydration Unit
Unit Name: Clear Fork Dehydrator 2
Model: NATCO TEG Glycol Dehydration Unit
NATURAL GAS OUTPUT

Attachment C

This Engine is used to power a compressor which is then used to compress natural gas to allow Enervest to produce natural gas wells more efficiently.

Attachment D

ConocoPhillips

Natural Gas

Safety Data Sheet

Section 1: Identification of the substance or mixture and of the supplier

Product Name:	Natural Gas
SDS Number:	724330
Synonyms/Other Means of Identification:	Fuel Gas Residue Gas Processed Gas Natural Gas, Dry Compressed Natural Gas
Intended Use:	Fuel
Manufacturer:	ConocoPhillips 600 N. Dairy Ashford Houston, Texas 77079-1175
Emergency Health and Safety Number:	Chemtrec: 800-424-9300 (24 Hours)
SDS Information:	Phone: 855-244-0762 Email: SDS@conocophillips.com URL: www.conocophillips.com

Section 2: Hazard(s) Identification

GHS Classification

H220 – Flammable gases – Category 1
H280 -- Gases under pressure -- Compressed gas

Label Elements

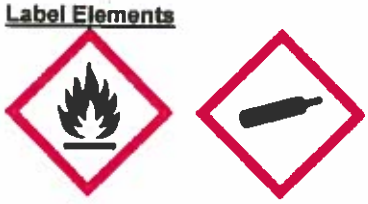

DANGER
Extremely flammable gas. (H220)*
Contains gas under pressure. May explode if heated. (H280)*
Gas may reduce oxygen in confined spaces.

Precautionary Statement(s):
Keep away from heat/sparks/open flames/hot surfaces. - No smoking. (P210)*
Leaking gas fire: Do not extinguish, unless leak can be stopped safely. (P377)*
Eliminate all ignition sources if safe to do so. (P381)*
Protect from sunlight. Store in a well ventilated place. (P410+P403)*

** (Applicable GHS hazard code.)*

Section 3: Composition / Information on Ingredients

Component	CASRN	Concentration[1]
Natural gas, dried	68410-63-9	100

[1] All concentrations are percent by weight unless ingredient is a gas. Gas concentrations are in percent by volume.

Section 4: First Aid Measures

Eye Contact: If irritation or redness develops from exposure, flush eyes with clean water. If symptoms persist, seek medical attention.

Skin Contact: First aid is not normally required. However, it is good practice to wash any chemical from the skin.

Inhalation (Breathing): If respiratory symptoms develop, move victim away from source of exposure and into fresh air in a position comfortable for breathing. If breathing is difficult, oxygen or artificial respiration should be administered by qualified personnel. If symptoms persist, seek medical attention.

Ingestion (Swallowing): This material is a gas under normal atmospheric conditions and ingestion is unlikely.

Most important symptoms and effects

Acute: Anesthetic effects at high concentrations.

Delayed: None known or anticipated. See Section 11 for information on effects from chronic exposure, if any.

Notes to Physician: Epinephrine and other sympathomimetic drugs may initiate cardiac arrhythmias in persons exposed to high concentrations of hydrocarbon solvents (e.g., in enclosed spaces or with deliberate abuse). The use of other drugs with less arrhythmogenic potential should be considered. If sympathomimetic drugs are administered, observe for the development of cardiac arrhythmias.

Section 5: Fire-Fighting Measures

NFPA 704 Hazard Class

Health: 1 **Flammability:** 4 **Instability:** 0 (0-Minimal, 1-Slight, 2-Moderate, 3-Serious, 4-Severe)

Unusual Fire & Explosion Hazards: Extremely flammable. This material can be ignited by heat, sparks, flames, or other sources of ignition (e.g., static electricity, pilot lights, mechanical/electrical equipment, and electronic devices such as cell phones, computers, calculators, and pagers which have not been certified as intrinsically safe). Vapors may travel considerable distances to a source of ignition where they can ignite, flash back, or explode. May create vapor/air explosion hazard indoors, in confined spaces, outdoors, or in sewers. If container is not properly cooled, it can rupture in the heat of a fire. Contents under pressure.

Extinguishing Media: Dry chemical or carbon dioxide is recommended. Carbon dioxide can displace oxygen. Use caution when applying carbon dioxide in confined spaces.

Fire Fighting Instructions: For fires beyond the initial stage, emergency responders in the immediate hazard area should wear protective clothing. When the potential chemical hazard is unknown, in enclosed or confined spaces, a self contained breathing apparatus should be worn. In addition, wear other appropriate protective equipment as conditions warrant (see Section 8).

Isolate immediate hazard area and keep unauthorized personnel out. Stop spill/release if it can be done safely. If this cannot be done, allow fire to burn. Move undamaged containers from immediate hazard area if it can be done safely. Stay away from ends of container. Water spray may be useful in minimizing or dispersing vapors and to protect personnel. Cool equipment exposed to fire with water, if it can be done safely.

Hazardous Combustion Products: Combustion may yield smoke, carbon monoxide, and other products of incomplete combustion. Oxides of nitrogen and sulfur may also be formed.

See Section 9 for Flammable Properties including Flash Point and Flammable (Explosive) Limits

Section 6: Accidental Release Measures

Personal Precautions: Extremely flammable. Spillages of liquid product will create a fire hazard and may form an explosive atmosphere. Keep all sources of ignition and hot metal surfaces away from spill/release if safe to do so. The use of explosion-proof electrical equipment is recommended. Beware of accumulation of gas in low areas or contained areas, where explosive concentrations may occur. Prevent from entering drains or any place where accumulation may occur. Ventilate area and allow to evaporate. Stay upwind and away from spill/release. Avoid direct contact with material. For large spillages, notify persons down wind of the spill/release, isolate immediate hazard area and keep unauthorized personnel out. Wear appropriate protective equipment, including respiratory protection, as conditions warrant (see Section 8). See Sections 2 and 7 for additional information on hazards and precautionary measures.

Environmental Precautions: Stop spill/release if it can be done safely. Water spray may be useful in minimizing or dispersing vapors. If spill occurs on water notify appropriate authorities and advise shipping of any hazard.

Methods for Containment and Clean-Up: Notify relevant authorities in accordance with all applicable regulations.

Recommended measures are based on the most likely spillage scenarios for this material; however local conditions and regulations may influence or limit the choice of appropriate actions to be taken.

Section 7: Handling and Storage

Precautions for safe handling: Keep away from ignition sources such as heat/sparks/open flame – No smoking. Take precautionary measures against static discharge. Use good personal hygiene practices and wear appropriate personal protective equipment (see section 8).

Contents under pressure. Gas can accumulate in confined spaces and limit oxygen available for breathing. Use only with adequate ventilation. The use of explosion-proof electrical equipment is recommended and may be required (see appropriate fire codes). Refer to NFPA-70 and/or API RP 2003 for specific bonding/grounding requirements. Electrostatic charge may accumulate and create a hazardous condition when handling or processing this material. To avoid fire or explosion, dissipate static electricity during transfer by grounding and bonding containers and equipment before transferring material. Do not enter confined spaces such as tanks or pits without following proper entry procedures such as ASTM D-4276 and 29CFR 1910.146. Cold burns may occur during filling operations. Containers and delivery lines may become cold enough to present cold burn hazard.

The use of hydrocarbon fuel in an area without adequate ventilation may result in hazardous levels of incomplete combustion products (e.g. carbon monoxide, oxides of sulfur and nitrogen, benzene and other hydrocarbons) and/or dangerously low oxygen levels.

Conditions for safe storage: Keep container(s) tightly closed and properly labeled. Use and store this material in cool, dry, well-ventilated areas away from heat, direct sunlight, hot metal surfaces, and all sources of ignition. Store only in approved containers. Post area "No Smoking or Open Flame." Keep away from any incompatible material (see Section 10). Protect container(s) against physical damage. Outdoor or detached storage is preferred. Indoor storage should meet OSHA standards and appropriate fire codes.

"Empty" containers retain residue and may be dangerous. Do not pressurize, cut, weld, braze, solder, drill, grind, or expose such containers to heat, flame, sparks, or other sources of ignition. They may explode and cause injury or death. Avoid exposing any part of a compressed-gas cylinder to temperatures above 125F(51.6C). Gas cylinders should be stored outdoors or in well ventilated storerooms at no lower than ground level and should be quickly removable in an emergency.

Section 8: Exposure Controls / Personal Protection

Component	ACGIH	OSHA	Other
Natural gas, dried	1000 ppm TWA as Aliphatic Hydrocarbons C1-4	---	---

Note: State, local or other agencies or advisory groups may have established more stringent limits. Consult an industrial hygienist or similar professional, or your local agencies, for further information.

Engineering controls: If current ventilation practices are not adequate to maintain airborne concentrations below the established exposure limits, additional engineering controls may be required.

Eye/Face Protection: The use of eye/face protection is not normally required; however, good industrial hygiene practice suggests the use of eye protection that meets or exceeds ANSI Z.87.1 whenever working with chemicals.

Skin/Hand Protection: The use of skin protection is not normally required; however, good industrial hygiene practice suggests the use of gloves or other appropriate skin protection whenever working with chemicals.

Respiratory Protection: A NIOSH approved, self-contained breathing apparatus (SCBA) or equivalent operated in a pressure demand or other positive pressure mode should be used in situations of oxygen deficiency (oxygen content less than 19.5 percent), unknown exposure concentrations, or situations that are immediately dangerous to life or health (IDLH).

A respiratory protection program that meets or is equivalent to OSHA 29 CFR 1910.134 and ANSI Z88.2 should be followed whenever workplace conditions warrant a respirator's use.

Suggestions provided in this section for exposure control and specific types of protective equipment are based on readily available information. Users should consult with the specific manufacturer to confirm the performance of their protective equipment. Specific situations may require consultation with industrial hygiene, safety, or engineering professionals.

Section 9: Physical and Chemical Properties

Note: Unless otherwise stated, values are determined at 20°C (68°F) and 760 mm Hg (1 atm). Data represent typical values and are not intended to be specifications.

Appearance:	Colorless
Physical Form:	Compressed Gas
Odor:	Slight hydrocarbon
Odor Threshold:	No data
pH:	Not applicable
Vapor Density (air=1):	0.5
Initial Boiling Point/Range:	No data
Melting/Freezing Point:	No data
Solubility in Water:	Slight
Partition Coefficient (n-octanol/water) (Kow):	No data
Percent Volatile:	100%
Flammability (solid, gas):	Extremely Flammable
Evaporation Rate (nBuAc=1):	No data
Flash Point:	-299 °F / -184 °C
Test Method:	(estimate)
Lower Explosive Limits (vol % in air):	2.0
Upper Explosive Limits (vol % in air):	10.0
Auto-ignition Temperature:	999 °F / 537 °C

Section 10: Stability and Reactivity

Stability: Stable under normal ambient and anticipated conditions of use.

Conditions to Avoid: Avoid all possible sources of ignition. Heat will increase pressure in the storage tank.

Materials to Avoid (Incompatible Materials): Avoid contact with acids, aluminum chloride, chlorine, chlorine dioxide, halogens and oxidizing agents.

Hazardous Decomposition Products: Not anticipated under normal conditions of use.

Hazardous Polymerization: Not known to occur.

Section 11: Toxicological Information

Information on Toxicological Effects of Substance/Mixture

Acute Toxicity	Hazard	Additional Information	LC50/LD50 Data
Inhalation	Unlikely to be harmful	Asphyxiant. High concentrations in confined spaces may limit oxygen available for breathing. See Signs and Symptoms.	> 20,000 ppm (gas)
Skin Absorption	Skin absorption is not anticipated		Not Applicable
Ingestion (Swallowing)	Ingestion is not anticipated		Not Applicable

Aspiration Hazard: Not applicable

Skin Corrosion/Irritation: Skin exposure is not anticipated.

Serious Eye Damage/Irritation: Not expected to be irritating.

Signs and Symptoms: Light hydrocarbon gases are simple asphyxiants and can cause anesthetic effects at high concentrations. Symptoms of overexposure, which are reversible if exposure is stopped, can include shortness of breath, drowsiness, headaches, confusion, decreased coordination, visual disturbances and vomiting. Continued exposure can lead to hypoxia (inadequate oxygen), rapid breathing, cyanosis (bluish discoloration of the skin), numbness of the extremities, unconsciousness and death.

Skin Sensitization: Skin contact is not anticipated.

Respiratory Sensitization: Not expected to be a respiratory sensitizer.

Specific Target Organ Toxicity (Single Exposure): Not expected to cause organ effects from single exposure.

Specific Target Organ Toxicity (Repeated Exposure): Not expected to cause organ effects from repeated exposure.

Carcinogenicity: Not expected to cause cancer. This substance is not listed as a carcinogen by IARC, NTP or OSHA.

Germ Cell Mutagenicity: Not expected to cause heritable genetic effects.

Reproductive Toxicity: Not expected to cause reproductive toxicity.

Other Comments: High concentrations may reduce the amount of oxygen available for breathing, especially in confined spaces. Hypoxia (inadequate oxygen) during pregnancy may have adverse effects on the developing fetus.

Section 12: Ecological Information

Toxicity: Petroleum gases will readily evaporate from the surface and would not be expected to have significant adverse effects in the aquatic environment. Classification: No classified hazards.

Persistence and Degradability: The hydrocarbons in this material are expected to be inherently biodegradable. In practice, hydrocarbon gases are not likely to remain in solution long enough for biodegradation to be a significant loss process. Hydrogen sulfide, if present in refinery gas streams, will be rapidly oxidized in water and insoluble sulfides precipitated from water when metallic radicals are present.

Bioaccumulative Potential: Since the log Kow values measured for refinery gas constituents are below 3, they are not regarded as having the potential to bioaccumulate.

Mobility in Soil: Due to the extreme volatility of petroleum gases, air is the only environmental compartment in which they will be found. In air, these hydrocarbons undergo photodegradation by reaction with hydroxyl radicals with half-lives ranging from 3.2 days for n-butane to 7 days for propane.

Other Adverse Effects: None anticipated.

Section 13: Disposal Considerations

This material is a gas and would not typically be managed as a waste.

Section 14: Transport Information

U.S. Department of Transportation (DOT)

Shipping Description:	UN1971, Natural gas, compressed, 2.1
Non-Bulk Package Marking:	Natural gas, compressed, UN1971
Non-Bulk Package Labeling:	Flammable gas
Bulk Package/Placard Marking:	Flammable gas / 1971
Packaging - References:	49 CFR 173.306; 173.302; 173.302 ***(Exceptions; Non-bulk; Bulk)***
Hazardous Substance:	None
Emergency Response Guide:	115

Note: ***Transport in bulk according to Annex II of MARPOL 73/78 and the IBC Code:*** *Not applicable*

International Maritime Dangerous Goods (IMDG)

Shipping Description:	UN1971, Natural gas, compressed, 2.1
Non-Bulk Package Marking:	Natural gas, compressed, UN1971
Labels:	Flammable gas
Placards/Marking (Bulk):	Flammable gas / 1971
Packaging - Non-Bulk:	P200
EMS:	F-D, S-U

International Civil Aviation Org. / International Air Transport Assoc. (ICAO/IATA)

UN/ID #:	UN1971
Proper Shipping Name:	Natural gas, compressed
Hazard Class/Division:	2.1
Subsidiary risk:	None
Packing Group:	None
Non-Bulk Package Marking:	Natural gas, compressed, UN1971
Labels:	Flammable gas , Cargo Aircraft Only
ERG Code:	10L

	LTD. QTY	Passenger Aircraft	Cargo Aircraft Only
Packaging Instruction #:	*Forbidden*	*Forbidden*	200
Max. Net Qty. Per Package:	*Forbidden*	*Forbidden*	150 kg

Section 15: Regulatory Information

CERCLA/SARA - Section 302 Extremely Hazardous Substances and TPQs (in pounds):
This material does not contain any chemicals subject to the reporting requirements of SARA 302 and 40 CFR 372.

CERCLA/SARA - Section 311/312 (Title III Hazard Categories)

Acute Health:	Yes
Chronic Health:	No
Fire Hazard:	Yes
Pressure Hazard:	Yes
Reactive Hazard:	No

CERCLA/SARA - Section 313 and 40 CFR 372:
This material does not contain any chemicals subject to the reporting requirements of SARA 313 and 40 CFR 372.

EPA (CERCLA) Reportable Quantity (in pounds):
EPA's Petroleum Exclusion applies to this material - (CERCLA 101(14)).

California Proposition 65:
This material does not contain any chemicals which are known to the State of California to cause cancer, birth defects or other reproductive harm at concentrations that trigger the warning requirements of California Proposition 65.

International Hazard Classification

Canada:
This product has been classified in accordance with the hazard criteria of the Controlled Products Regulations (CPR) and the MSDS contains all the information required by the Regulations.

WHMIS Hazard Class:
A - Compressed Gas
B1 - Flammable Gases

National Chemical Inventories
All components are either listed on the US TSCA Inventory, or are not regulated under TSCA
All components are either on the DSL, or are exempt from DSL listing requirements

U.S. Export Control Classification Number: EAR99

Section 16: Other Information

Date of Issue:	02-Apr-2012
Status:	FINAL
Previous Issue Date:	09-Feb-2012
Revised Sections or Basis for Revision:	Identified Hazards (Section 2) Precautionary Statement(s) (Section 2) First Aid (Section 4) Shipping information (Section 14) Regulatory information (Section 15)
SDS Number:	724330

Guide to Abbreviations:
ACGIH = American Conference of Governmental Industrial Hygienists; CASRN = Chemical Abstracts Service Registry Number; CEILING = Ceiling Limit (15 minutes); CERCLA = The Comprehensive Environmental Response, Compensation, and Liability Act; EPA = Environmental Protection Agency; GHS = Globally Harmonized System; IARC = International Agency for Research on Cancer; INSHT = National Institute for Health and Safety at Work; IOPC = International Oil Pollution Compensation; LEL = Lower Explosive Limit; NE = Not Established; NFPA = National Fire Protection Association; NTP = National Toxicology Program; OSHA = Occupational Safety and Health Administration; PEL = Permissible Exposure Limit (OSHA); SARA = Superfund Amendments and Reauthorization Act; STEL = Short Term Exposure Limit (15 minutes); TLV = Threshold Limit Value (ACGIH); TWA = Time Weighted Average (8 hours); UEL = Upper Explosive Limit; WHMIS = Worker Hazardous Materials Information System (Canada)

Disclaimer of Expressed and Implied Warranties:
The information presented in this Material Safety Data Sheet is based on data believed to be accurate as of the date this Material Safety Data Sheet was prepared. HOWEVER, NO WARRANTY OF MERCHANTABILITY, FITNESS FOR ANY PARTICULAR PURPOSE, OR ANY OTHER WARRANTY IS EXPRESSED OR IS TO BE IMPLIED REGARDING THE ACCURACY OR COMPLETENESS OF THE INFORMATION PROVIDED ABOVE, THE RESULTS TO BE OBTAINED FROM THE USE OF THIS INFORMATION OR THE PRODUCT, THE SAFETY OF THIS PRODUCT, OR THE HAZARDS RELATED TO ITS USE. No responsibility is assumed for any damage or injury resulting from abnormal use or from any failure to adhere to recommended practices. The information provided above, and the product, are furnished on the condition that the person receiving them shall make their own determination as to the suitability of the product for their particular purpose and on the condition that they assume the risk of their use. In addition, no authorization is given nor implied to practice any patented invention without a license.

Attachment E

Lean Burn Engines 4 Stroke AP 42 Table 3.2-1					
Emissions Unit ID:	Clear Fork 1	BHP	1004	BTU Content of Gas:	1000
Fuel Usage in MMBTU/hr:	7.397	Fuel Consumption BTU/BHP-hr	7368	Date of manufacture:	11/22/2005
Make:	CAT	Model:	G3512TALE	Serial number:	7NJ01334
Pollutants		Emission Factor	lbs./hr	Tons Year	G/bhp-hr
SOX ton/yr		0.000588	0.004	0.019	0.002
PM10 (filterable)		0.000077	0.001	0.002	0.000
PM Condensable		0.009910	0.073	0.321	0.033
Formaldehyde(CH2O)		0.052800	0.391	1.711	0.176
Calculations		EF	MMBTU x EF = lbs/hr	(lbs/hr)/2000	(lbs-hr*453.592)/BPH

Emissions Calculator Based on Spec sheet Data @ 100% Load					
Pollutant	Unit BHP	Emissions g/BHP-Hr	Grams Per hour	lbs-hr	Tons/yr
NOX	1004	2	2008.0	4.427	19.390
VOC	1004	0.3	301.2	0.664	2.908
CO	1004	2.11	2118.4	4.670	20.456
Calculations			(BHP*G/HP-hr)*8760	g-hr * 0.00220462	lbs-hr*8760/2000

Fuel Usage Calculator					
Rated BHP	BTU/BHP-Hr	MMBTU/ Hr	BTU Content:	Total BTU/Hr	Total BTU Year
1004	7368	7.397	1000	7397472	64801854720
		(Bhp x Btu/Bhp-hr)/1,000,000		Bhp x Btu/Bhp-hr	TBtu/Bhp-hr x 8760
MMBTU/hr	MCF/HOUR	SCF / HOUR	SCF/YR	MCF/YEAR	MMSCF/YR
7.397472	7.397472	7397.472	64801854.72	64801.85472	64.80185472
	SCF-HR/1000	TBtu HR/ Btu Content	SCF-HR*8760	SCF-YR/1000	SCF-YR/1,000,000

CATERPILLAR®

G3512 LE Gas Petroleum Engine

641 & 749 bkW
860 & 1004 bhp
1200 & 1400 rpm

2.0 g/bhp-hr NOx (NTE)

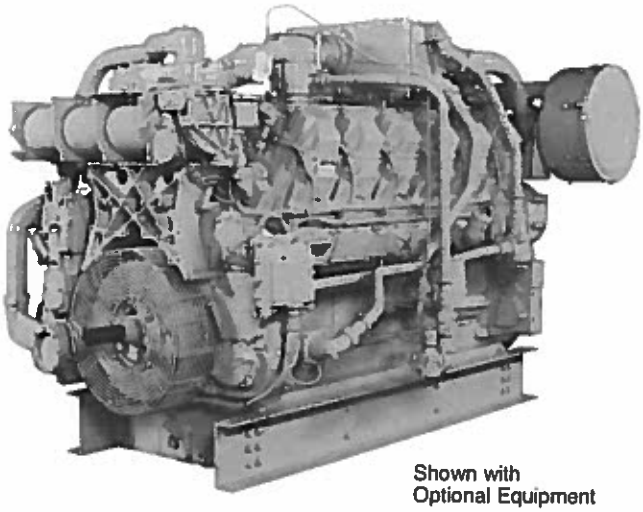

Shown with Optional Equipment

CAT® ENGINE SPECIFICATIONS

V-12, 4-Stroke-Cycle

Bore	170 mm (6.7 in.)
Stroke	190 mm (7.5 in.)
Displacement	51.8 L (3158 cu. in.)
Aspiration	Turbocharged-Aftercooled
Digital Engine Management Governor and Protection	Electronic (ADEM™ A3)
Combustion	Low Emission (Lean Burn)
Engine Weight, net dry (approx)	6677 kg (14,720 lb)
Power Density	8.9 kg/kW (14.7 lb/bhp)
Power per Displacement	19.3 bhp/L
Total Cooling System Capacity	162.8 L (43 gal)
Jacket Water	147.6 L (39 gal)
Aftercooler Circuit	15.1 L (4 gal)
Lube Oil System (refill)	336.9 L (89 gal)
Oil Change Interval	1000 hours
Rotation (from flywheel end)	Counterclockwise
Flywheel and Flywheel Housing	SAE No. 00
Flywheel Teeth	183

FEATURES

Engine Design
- Proven reliability and durability
- Ability to burn a wide spectrum of gaseous fuels
- Robust diesel strength design prolongs life and lowers owning and operating costs
- Broad operating speed range

Emissions
Meets U.S. EPA Spark Ignited Stationary NSPS Emissions for 2007/8

Advanced Digital Engine Management
ADEM A3 control system providing integrated ignition, speed governing, protection, and controls, including detonation-sensitive variable ignition timing. ADEM A3 has improved: user interface, display system, shutdown controls, and system diagnostics.

Lean Burn Engine Technology
Lean-burn engines operate with large amounts of excess air. The excess air absorbs heat during combustion reducing the combustion temperature and pressure, greatly reducing levels of NOx. Lean-burn design also provides longer component life and excellent fuel consumption.

Ease of Operation
Side covers on block allow for inspection of internal components

Full Range of Attachments
Large variety of factory-installed engine attachments reduces packaging time

Testing
Every engine is full-load tested to ensure proper engine performance.

Gas Engine Rating Pro
GERP is a PC-based program designed to provide site performance capabilities for Cat® natural gas engines for the gas compression industry. GERP provides engine data for your site's altitude, ambient temperature, fuel, engine coolant heat rejection, performance data, installation drawings, spec sheets, and pump curves.

Product Support Offered Through Global Cat Dealer Network
More than 2,200 dealer outlets

Cat factory-trained dealer technicians service every aspect of your petroleum engine

Cat parts and labor warranty

Preventive maintenance agreements available for repair-before-failure options

S•O•S℠ program matches your oil and coolant samples against Caterpillar set standards to determine:
- Internal engine component condition
- Presence of unwanted fluids
- Presence of combustion by-products
- Site-specific oil change interval

Over 80 Years of Engine Manufacturing Experience
Over 60 years of natural gas engine production

Ownership of these manufacturing processes enables Caterpillar to produce high quality, dependable products.
- Cast engine blocks, heads, cylinder liners, and flywheel housings
- Machine critical components
- Assemble complete engine

Web Site
For all your petroleum power requirements, visit www.catoilandgas.cat.com.

STANDARD EQUIPMENT

Air Inlet System
Air cleaner — intermediate-duty with service indicator

Cooling System
High temperature circuit (engine jacket + oil cooler):
- coolant pump
- thermostats and housing

Low temperature circuit (aftercooler):
- coolant pump
- thermostats and housing
- aftercooler core for salt air atmosphere

Exhaust System
Watercooled exhaust manifolds
Crankcase breather — top mounted

Flywheels & Flywheel Housings
SAE No. 00 flywheel
SAE No. 00 flywheel housing
SAE standard rotation

Fuel System
Gas pressure regulator
Natural gas carburetor

Instrumentation
Advisor panel

Lubrication System
Oil cooler
Oil filter — RH
Oil bypass filter (TA or NA engines only)
Oil pan — shallow
Oil sampling valve
Turbo oil accumulator

Mounting System
Rails, engine mounting — 254 mm (10 in.)

Protection System
Electronic shutoff system
Gas shutoff valve

General
Paint — Cat yellow
Vibration damper and guard — dual 484 mm (23 in.)

OPTIONAL EQUIPMENT

Air Inlet System
Remote air inlet adapters
Precleaners

Charging System
Battery chargers
Charging alternator

Cooling System
Cleanable aftercooler core
Connection flanges
Expansion and overflow tank
Water level switch gauge

Exhaust System
Flexible fittings
Elbows
Connection flanges
Exhaust expanders
Rain cap (NA engine only)
Mufflers

Fuel System
Low pressure gas conversions
Propane gas valve and jet kits
Fuel filter
Air/fuel ratio control

Instrumentation
PL1000 communications modules

Lubrication System
Oil bypass filter removal
Oil pan accessories
Sump pump
Air prelube pump
Manual prelube pump
Lubricating oil

Mounting System
Rails
Vibration isolators

Power Take-Offs
Front accessory drives
Auxiliary drive shafts and pulleys
Front stub shaft
Pulleys

Protection System
Crankcase explosion relief valves

Starting System
Air starting motor
Air pressure regulator
Air silencer
Electric air start controls
Electric starting motors — dual 24-volt
Battery sets (24-volt dry), cables, and rack

General
Flywheel guard removal
Engine barring group
Premium 8:1 pistons

TECHNICAL DATA

G3512 LE Gas Petroleum Engine

Fuel System		2 g NOx NTE Rating DM8617-01	2 g NOx NTE Rating DM8619-01
Engine Power			
@ 100% Load	bkW (bhp)	749 (1004)	641 (860)
@ 75% Load	bkW (bhp)	562 (754)	481 (645)
Engine Speed	rpm	**1400**	**1200**
Max Altitude @ Rated Torque and 38°C (100°F)	m (ft)	914.4 (3000)	609.6 (2000)
Speed Turndown @ Max Altitude, Rated Torque, and 38°C (100°F)	%	14	12
SCAC Temperature	°C (°F)	54 (130)	54 (130)
Emissions*			
NO_x	g/bkW-hr (g/bhp-hr)	2.68 (2)	2.68 (2)
CO	g/bkW-hr (g/bhp-hr)	2.83 (2.11)	2.64 (1.97)
CO_2	g/bkW-hr (g/bhp-hr)	644 (481)	634 (473)
VOC**	g/bkW-hr (g/bhp-hr)	0.4 (0.3)	0.39 (0.29)
Fuel Consumption***			
@ 100% Load	MJ/bkW-hr (Btu/bhp-hr)	10.42 (7368)	10.47 (7402)
@ 75% Load	MJ/bkW-hr (Btu/bhp-hr)	10.84 (7665)	10.86 (7676)
Heat Balance			
Heat Rejection to Jacket Water			
@ 100% Load	bkW (Btu/mn)	541.6 (30,802)	487.4 (27,715)
@ 75% Load	bkW (Btu/mn)	466.71 (26,565)	420.24 (23,920)
Heat Rejection to Aftercooler			
@ 100% Load	bkW (Btu/mn)	145.2 (8260)	115.1 (6551)
@ 75% Load	bkW (Btu/mn)	88.0 (5006)	68.1 (3875)
Heat Rejection to Exhaust			
@ 100% Load LHV to 25° C (77° F)	bkW (Btu/mn)	605 (34,406)	503.6 (28,644)
@ 75% Load LHV to 25° C (77° F)	bkW (Btu/mn)	462 (26,284)	376.2 (21,397)
Exhaust System			
Exhaust Gas Flow Rate			
@ 100% Load	m³/min (cfm)	160.4 (5666)	135.6 (4790)
@ 75% Load	m³/min (cfm)	122.87 (4339)	102.56 (3622)
Exhaust Stack Temperature			
@ 100% Load	°C (°F)	445.6 (834)	439.4 (823)
@ 75% Load	°C (°F)	446.1 (835)	435 (815)
Intake System			
Air Inlet Flow Rate			
@ 100% Load	m³/min (scfm)	61.5 (2172)	52.39 (1850)
@ 75% Load	m³/min (scfm)	46.98 (1659)	39.81 (1406)
Gas Pressure	kPag (psig)	241.5-275.8 (35-40)	241.5-275.8 (35-40)

*at 100% load and speed, all values are listed as not to exceed
**Volatile organic compounds as defined in U.S. EPA 40 CFR 60, subpart JJJJ
***ISO 3046/1

CATERPILLAR®

G3512 LE GAS PETROLEUM ENGINE

641 & 749 bkW (860 & 1004 bhp)

GAS PETROLEUM ENGINE

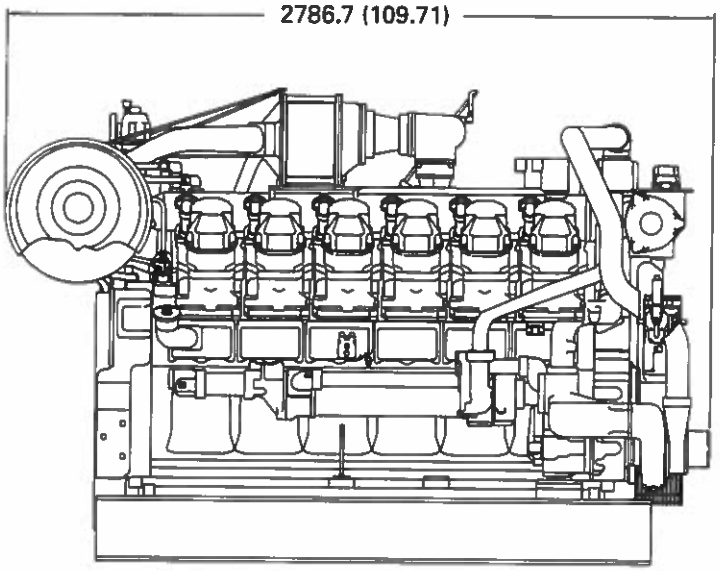

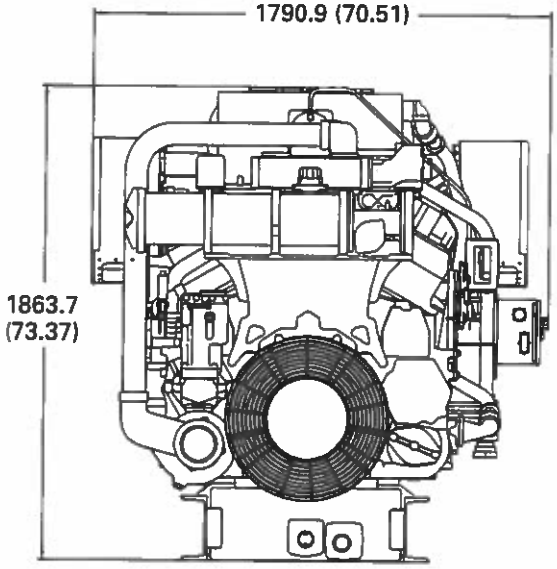

DIMENSIONS		
Length	mm (in)	2786.7 (109.71)
Width	mm (in)	1790.9 (70.51)
Height	mm (in)	1863.7 (73.37)
Shipping Weight	kg (lb)	6677 (14,720)

Note: General configuration not to be used for installation. See general dimension drawings for detail (drawing #294-0137).

Dimensions are in mm (inches).

RATING DEFINITIONS AND CONDITIONS

Engine performance is obtained in accordance with SAE J1995, ISO3046/1, BS5514/1, and DIN6271/1 standards.

Transient response data is acquired from an engine/generator combination at normal operating temperature and in accordance with ISO3046/1 standard ambient conditions. Also in accordance with SAE J1995, BS5514/1, and DIN6271/1 standard reference conditions.

Conditions: Power for gas engines is based on fuel having an LHV of 33.74 kJ/L (905 Btu/cu ft) at 101 kPa (29.91 in. Hg) and 15° C (59° F). Fuel rate is based on a cubic meter at 100 kPa (29.61 in. Hg) and 15.6° C (60.1° F). Air flow is based on a cubic foot at 100 kPa (29.61 in. Hg) and 25° C (77° F). Exhaust flow is based on a cubic foot at 100 kPa (29.61 in. Hg) and stack temperature.

Materials and specifications are subject to change without notice. The International System of Units (SI) is used in this publication. CAT, CATERPILLAR, their respective logos, ADEM, "Caterpillar Yellow" and the "Power Edge" trade dress, as well as corporate and product identity used herein, are trademarks of Caterpillar and may not be used without permission.

Performance Numbers: DM8617-01, DM8619-01
LEHW0035-01 (2-10)

©2010 Caterpillar
All rights reserved.

Lean Burn Engines 4 Stroke AP 42 Table 3.2-1					
Emissions Unit ID:	Clear Fork 2	BHP	670	BTU Content of Gas:	1000
Fuel Usage in MMBTU/hr:	5.032	Fuel Consumption BTU/BHP-hr	7510	Date of manufacture:	2/6/2001
Make:	CAT	Model:	G3508 TALE	Serial number:	9GT00125
Pollutants		Emission Factor	lbs./hr	Tons Year	G/bhp-hr
SOX ton/yr		0.000588	0.003	0.013	0.002
PM10 (filterable)		0.000077	0.000	0.002	0.000
PM Condensable		0.009910	0.050	0.218	0.034
Formaldehyde(CH2O)		0.052800	0.266	1.164	0.180
Calculations		EF	MMBTU x EF = lbs/hr	(lbs/hr)/2000	(lbs-hr*453.592)/BPH

Emissions Calculator Based on Spec sheet Data @ 100% Load					
Pollutant	Unit BHP	Emissions g/BHP-Hr	Grams Per hour	lbs-hr	Tons/yr
NOX	670	2	1340.0	2.954	12.939
VOC	670	0.3	201.0	0.443	1.941
CO	670	1.84	1232.8	2.718	11.904
Calculations			(BHP*G/HP-hr)*8760	g-hr * 0.00220462	lbs-hr*8760/2000

Fuel Usage Calculator					
Rated BHP	BTU/BHP-Hr	MMBTU/ Hr	BTU Content:	Total BTU/Hr	Total BTU Year
670	7510	5.032	1000	5031700	44077692000
		(Bhp x Btu/Bhp-hr)/1,000,000		Bhp x Btu/Bhp-hr	TBtu/Bhp-hr x 8760
MMBTU/hr	MCF/HOUR	SCF / HOUR	SCF/YR	MCF/YEAR	MMSCF/YR
5.0317	5.0317	5031.7	44077692	44077.692	44.077692
	SCF-HR/1000	TBtu HR/ Btu Content	SCF-HR*8760	SCF-YR/1000	SCF-YR/1,000,000

CATERPILLAR®

G3508 LE Gas Petroleum Engine

500 bkW (670 bhp)
1400 rpm

2.0 g/bhp-hr NOx (NTE)

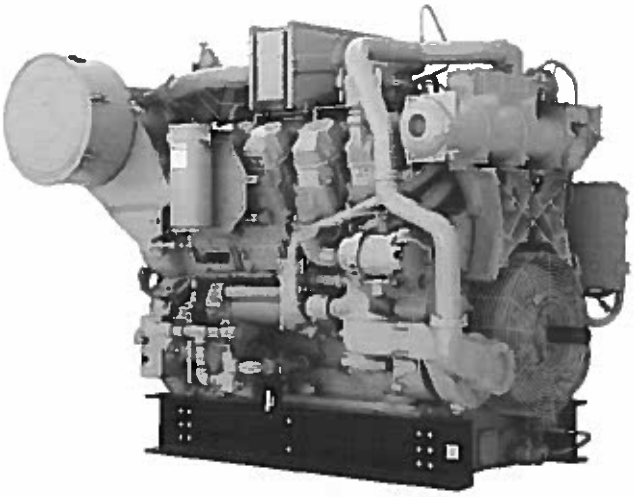

Shown with Optional Equipment

CAT® ENGINE SPECIFICATIONS

V-8, 4-Stroke-Cycle

Bore	170 mm (6.7 in.)
Stroke	190 mm (7.5 in.)
Displacement	34.5 L (2105 cu. in.)
Aspiration	Turbocharged-Aftercooled
Digital Engine Management Governor and Protection	Electronic (ADEM™ A3)
Combustion	Low Emission (Lean Burn)
Engine Weight, net dry (approx)	5420 kg (11,950 lb)
Power Density	10.9 kg/kW (17.8 lb/bhp)
Power per Displacement	19.4 bhp/L
Total Cooling System Capacity	124.9 L (33 gal)
Jacket Water	113.6 L (30 gal)
SCAC	11.4 L (3 gal)
Lube Oil System (refill)	230.9 L (61 gal)
Oil Change Interval	1000 hours
Rotation (from flywheel end)	Counterclockwise
Flywheel and Flywheel Housing	SAE No. 00
Flywheel Teeth	183

FEATURES

Engine Design
- Proven reliability and durability
- Ability to burn a wide spectrum of gaseous fuels
- Robust diesel strength design prolongs life and lowers owning and operating costs
- Broad operating speed range

Emissions
Meets U.S. EPA Spark Ignited Stationary NSPS Emissions for 2007/8

Advanced Digital Engine Management
ADEM A3 control system providing integrated ignition, speed governing, protection, and controls, including detonation-sensitive variable ignition timing. ADEM A3 has improved: user interface, display system, shutdown controls, and system diagnostics.

Lean Burn Engine Technology
Lean-burn engines operate with large amounts of excess air. The excess air absorbs heat during combustion reducing the combustion temperature and pressure, greatly reducing levels of NOx. Lean-burn design also provides longer component life and excellent fuel consumption.

Ease of Operation
Side covers on block allow for inspection of internal components

Full Range of Attachments
Large variety of factory-installed engine attachments reduces packaging time

Testing
Every engine is full-load tested to ensure proper engine performance.

Gas Engine Rating Pro
GERP is a PC-based program designed to provide site performance capabilities for Cat® natural gas engines for the gas compression industry. GERP provides engine data for your site's altitude, ambient temperature, fuel, engine coolant heat rejection, performance data, installation drawings, spec sheets, and pump curves.

Product Support Offered Through Global Cat Dealer Network
More than 2,200 dealer outlets

Cat factory-trained dealer technicians service every aspect of your petroleum engine

Cat parts and labor warranty

Preventive maintenance agreements available for repair-before-failure options

S•O•S℠ program matches your oil and coolant samples against Caterpillar set standards to determine:
- Internal engine component condition
- Presence of unwanted fluids
- Presence of combustion by-products
- Site-specific oil change interval

Over 80 Years of Engine Manufacturing Experience
Over 60 years of natural gas engine production

Ownership of these manufacturing processes enables Caterpillar to produce high quality, dependable products.
- Cast engine blocks, heads, cylinder liners, and flywheel housings
- Machine critical components
- Assemble complete engine

Web Site
For all your petroleum power requirements, visit www.catoilandgas.cat.com.

STANDARD EQUIPMENT

Air Inlet System
Remote air inlet adapters

Charging System
Battery chargers

Cooling System
Jacket water thermostats and housing — full open temperature 98°C (208°F)
Jacket water pump — gear driven, centrifugal, non-self-priming
Aftercooler water pump — gear driven, centrifugal, non-self-priming
Aftercooler core for sea-air atmosphere
Aftercooler thermostats and housing — full open temperature 35°C (95°F)
Aftercooler — raw water, cleanable

Exhaust System
Exhaust manifolds — watercooled

Flywheels & Flywheel Housings
SAE No. 00 flywheel
SAE No. 00 flywheel housing
SAE standard rotation

Fuel System
Gas pressure regulator
Natural gas carburetor
Fuel gas shut-off valve (24V DC)

Instrumentation
Advisor panel
Advisor interconnect harness

Lubrication System
Crankcase breathers — top mounted
Oil cooler
Oil filter — RH
Oil pan — shallow
Oil sampling valve
Turbo oil accumulator

Mounting System
Rails, engine mounting

Power Take-Offs
Front housing — two-sided
Front lower LH accessory drive

Protection System
Electronic shutoff system
Gas shutoff valve

General
Paint — Cat yellow
Vibration damper and guard

OPTIONAL EQUIPMENT

Air Inlet System
Remote air inlet adapters

Charging System
Battery chargers

Cooling System
Aftercooler core
Thermostatic valves
Connections
Expansion and overflow tank
Water level switch gauge

European Certifications
European Union certifications

Exhaust System
Flexible fittings
Elbows
Flanges
Flange and exhaust expanders
Mufflers

Fuel System
Fuel filter

Instrumentation
Customer communication modules

Lubrication System
Oil filters — duplex
Oil pan drain
Oil level regulator
Sump pumps
Lubricating oil

Mounting System
Rails
Vibration isolators

Power Take-Offs
Auxiliary drive shaft
Auxiliary drive pulleys
Front stub shaft
Pulleys

Protection System
Gas valve
Explosion relief valves

Starting System
Air pressure regulator
Air silencer
JW heaters
Battery sets (24-volt dry)
Battery accessories

General
Flywheel guard removal
Engine barring group
Premium 8:1 pistons

TECHNICAL DATA

G3508 LE Gas Petroleum Engine — 1400 rpm

		2 g NOx NTE Rating DM8621-2
Engine Power		
@ 100% Load	bkW (bhp)	500 (670)
@ 75% Load	bkW (bhp)	375 (502)
Engine Speed	rpm	1400
Max Altitude @ Rated Torque and 38°C (100°F)	m (ft)	609.6 (2000)
Speed Turndown @ Max Altitude, Rated Torque, and 38°C (100°F)	%	25
SCAC Temperature	°C (°F)	54 (130)
Emissions*		
NOx	g/bkW-hr (g/bhp-hr)	2.68 (2)
CO	g/bkW-hr (g/bhp-hr)	2.47 (1.84)
CO_2	g/bkW-hr (g/bhp-hr)	627 (468)
VOC**	g/bkW-hr (g/bhp-hr)	0.41 (0.3)
Fuel Consumption***		
@ 100% Load	MJ/bkW-hr (Btu/bhp-hr)	10.63 (7510)
@ 75% Load	MJ/bkW-hr (Btu/bhp-hr)	11.22 (7936)
Heat Balance		
Heat Rejection to Jacket Water		
@ 100% Load	bkW (Btu/min)	319.8 (18,204)
@ 75% Load	bkW (Btu/min)	282 (16,013)
Heat Rejection to Aftercooler		
@ 100% Load	bkW (Btu/min)	80 (4555)
@ 75% Load	bkW (Btu/min)	56.1 (3191)
Heat Rejection to Exhaust		
@ 100% Load (LHV to 77° F / 25° C)	bkW (Btu/mn)	481.9 (27,406)
@ 75% Load (LHV to 77°) (LHV to 77° F / 25° C)	bkW (Btu/mn)	372.8 (21,203)
Exhaust System		
Exhaust Gas Flow Rate (@ stack temp.,14.5 psig)		
@ 100% Load	m^3/min (cfm)	115.7 (4086)
@ 75% Load	m^3/min (cfm)	89.57 (3163)
Exhaust Stack Temperature		
@ 100% Load	°C (°F)	529 (985)
@ 75% Load	°C (°F)	525 (977)
Intake System		
Air Inlet Flow Rate		
@ 100% Load	m^3/min (scfm)	39.53 (1396)
@ 75% Load	m^3/min (scfm)	30.72 (1085)
Gas Pressure	kPag (psig)	242-276 (35-40)

*at 100% load and speed, all values are listed as not to exceed
**Volatile organic compounds as defined in U.S. EPA 40 CFR 60, subpart JJJJ
***ISO 3046/1

CATERPILLAR®

G3508 LE GAS PETROLEUM ENGINE

500 bkW (670 bhp)

GAS PETROLEUM ENGINE

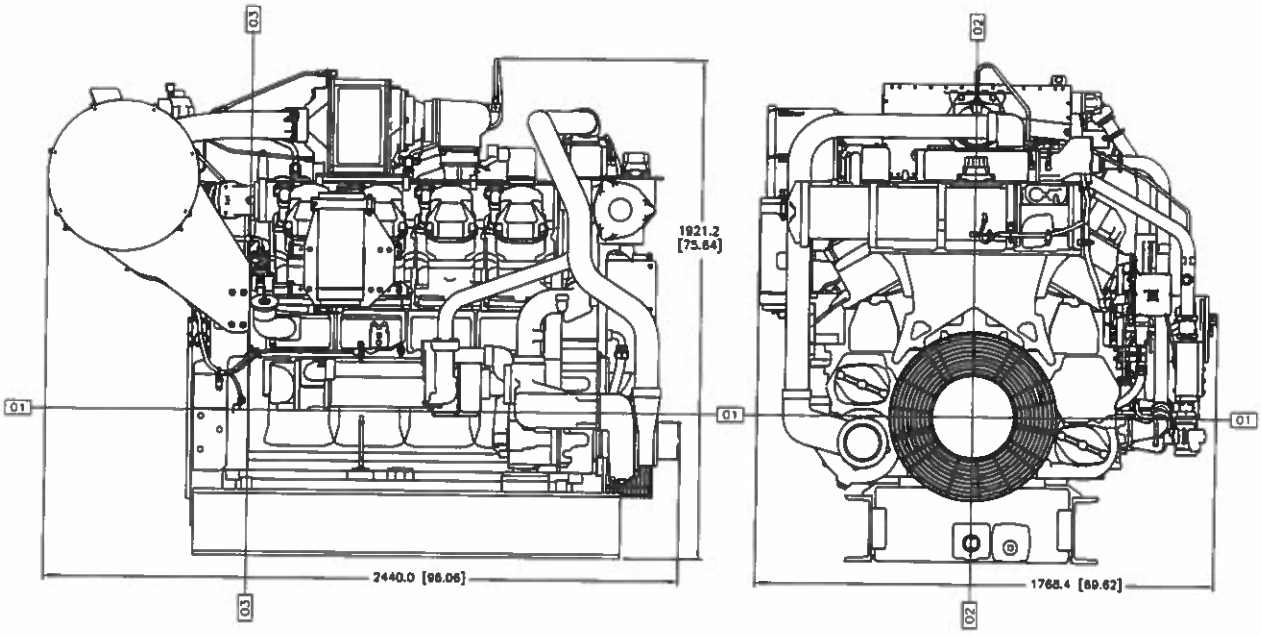

DIMENSIONS		
Length	mm (in)	2440.0 (96.06)
Width	mm (in)	1768.4 (69.62)
Height	mm (in)	1921.2 (75.64)
Shipping Weight	kg (lb)	5420 (11,950)

Note: General configuration not to be used for installation. See general dimension drawings for detail (drawing #315-3136).

Dimensions are in mm (inches).

RATING DEFINITIONS AND CONDITIONS

Engine performance is obtained in accordance with SAE J1995, ISO3046/1, BS5514/1, and DIN6271/1 standards.

Transient response data is acquired from an engine/generator combination at normal operating temperature and in accordance with ISO3046/1 standard ambient conditions. Also in accordance with SAE J1995, BS5514/1, and DIN6271/1 standard reference conditions.

Conditions: Power for gas engines is based on fuel having an LHV of 33.74 kJ/L (905 Btu/cu ft) at 101 kPa (29.91 in. Hg) and 15° C (59° F). Fuel rate is based on a cubic meter at 100 kPa (29.61 in. Hg) and 15.6° C (60.1° F). Air flow is based on a cubic foot at 100 kPa (29.61 in. Hg) and 25° C (77° F). Exhaust flow is based on a cubic foot at 100 kPa (29.61 in. Hg) and stack temperature.

Materials and specifications are subject to change without notice. The International System of Units (SI) is used in this publication.
CAT, CATERPILLAR, their respective logos, ADEM, S·O·S, "Caterpillar Yellow" and the "Power Edge" trade dress, as well as corporate and product identity used herein, are trademarks of Caterpillar and may not be used without permission.

Performance Number: DM8621-02
LEHW0034-01 (2-10)

©2010 Caterpillar
All rights reserved.