The Chemours Company
Washington Works
8480 DuPont Road
PO Box 1217
Washington, WV 26181

304-863-4000
chemours.com

August 21, 2015



**CERTIFIED MAIL – 7014 1820 0001 2876 1154**
**RETURN RECEIPT REQUESTED**

Mr. William F. Durham, Director
Division of Air Quality
WV Department of Environmental Protection
601 57th Street, SE
Charleston, WV 25304-2345

**Modification to Permit R13-2365G – Fluoropolymer Resin Manufacturing**

Dear Mr. Durham:

Attached you will find the application forms for a Class I Administrative update for R13-2365G.

This permit revision is to perform updates to the existing permit for the elimination of process specific requirements for Ammonium Perfluorooctanate (APFO). The current limitations and requirements for APFO will be replaced with a single requirement for the facilities to not "manufacture, use or purchase" the material.

We have also included the Attachment S form to allow inclusion of the changes into the Title V permit for Segment 2 of 14 Fluoropolymer Manufacturing.

If you have questions or concerns with this permit application please contact Mr. David F. Altman by telephone at (304) 863-4271 or Mr. John J. Mentink by telephone at (304) 863-4033 or by email at john.j.mentink@chemours.com.

Very truly yours,

David F. Altman
EHS Competency Manager
Chemours Washington Works



Enclosure
DFA:jjm/slb

CC: Ms. Carrie McCumbers – Title V Permitting Supervisor
Division of Air Quality
WV Department of Environmental Protection
601 57th Street, SE
Charleston, WV 25304-2345

Mr. M. Egnor – Permitting Engineer
Division of Air Quality
WV Department of Environmental Protection
601 57th Street, SE
Charleston, WV 25304-2345

Table of Content
R13-2365 Update

WEST VIRGINIA DEPARTMENT OF
ENVIRONMENTAL PROTECTION
**DIVISION OF AIR QUALITY**
601 57th Street, SE
Charleston, WV 25304
(304) 926-0475
www.dep.wv.gov/daq

# *APPLICATION FOR NSR PERMIT AND TITLE V PERMIT REVISION (OPTIONAL)*

PLEASE CHECK ALL THAT APPLY TO **NSR (45CSR13)** (IF KNOWN):

☐ **CONSTRUCTION** ☐ **MODIFICATION** ☐ **RELOCATION**
☒ **CLASS I ADMINISTRATIVE UPDATE** ☐ **TEMPORARY**
☐ **CLASS II ADMINISTRATIVE UPDATE** ☒ **AFTER-THE-FACT**

PLEASE CHECK TYPE OF **45CSR30 (TITLE V)** REVISION (IF ANY):

☒ **ADMINISTRATIVE AMENDMENT** ☐ **MINOR MODIFICATION**
☐ **SIGNIFICANT MODIFICATION**

IF ANY BOX ABOVE IS CHECKED, INCLUDE TITLE V REVISION INFORMATION AS **ATTACHMENT S** TO THIS APPLICATION

***FOR TITLE V FACILITIES ONLY: Please refer to "Title V Revision Guidance" in order to determine your Title V Revision options (Appendix A, "Title V Permit Revision Flowchart") and ability to operate with the changes requested in this Permit Application***

## *Section I. General*

1. Name of applicant *(as registered with the WV Secretary of State's Office)*:
The Chemours Company FC, LLC

2. Federal Employer ID No. ***(FEIN)***:
46-5626518

3. Name of facility *(if different from above)*:
Washington Works Facility

4. The applicant is the:
☐ **OWNER** ☐ **OPERATOR** ☒ **BOTH**

5A. Applicant's mailing address:
Building 1, Washington Works
Washington WV, 26181-1217

5B. Facility's present physical address:
8480 DuPont Road
Washington, WV 26181

6. **West Virginia Business Registration.** Is the applicant a resident of the State of West Virginia? ☒ **YES** ☐ **NO**
- If **YES,** provide a copy of the **Certificate of Incorporation/Organization/Limited Partnership** (one page) including any name change amendments or other Business Registration Certificate as **Attachment A.**
- If **NO,** provide a copy of the **Certificate of Authority/Authority of L.L.C./Registration** (one page) including any name change amendments or other Business Certificate as **Attachment A.**

7. If applicant is a subsidiary corporation, please provide the name of parent corporation:

8. Does the applicant own, lease, have an option to buy or otherwise have control of the *proposed site?* ☒ **YES** ☐ **NO**
- If **YES,** please explain: Owns site
- If **NO,** you are not eligible for a permit for this source.

9. Type of plant or facility (stationary source) to be **constructed, modified, relocated, administratively updated** or **temporarily permitted** (e.g., coal preparation plant, primary crusher, etc.): Chemical Manufacturing

10. North American Industry Classification System **(NAICS)** code for the facility:
325199

11A. DAQ Plant ID No. (for existing facilities only):
107-00182

11B. List all current 45CSR13 and 45CSR30 (Title V) permit numbers associated with this process (for existing facilities only):
R13-2365G, R13-3223, R30-107-00182 Segment 2 of 14

***All of the required forms and additional information can be found under the Permitting Section of DAQ's website, or requested by phone.***

12A.

- For **Modifications, Administrative Updates** or **Temporary permits** at an existing facility, please provide directions to the *present location* of the facility from the nearest state road;
- For **Construction** or **Relocation permits,** please provide directions to the *proposed new site location* from the nearest state road. Include a **MAP** as **Attachment B**.

Take the Route 50 bypass towards Ohio from I-77. Exit the Route 50 bypass at the last exit in West Virginia. At the light turn left and continue on DuPont road for approximately ½ - ¾ mile. The main plant entrance will be visible on your right.

| 12.B. New site address (if applicable): | 12C. Nearest city or town: | 12D. County: |
|---|---|---|
| N/A | Parkersburg | Wood |
| 12.E. UTM Northing (KM): 4346.833 | 12F. UTM Easting (KM): 442.3767 | 12G. UTM Zone: 17S |

13. Briefly describe the proposed change(s) at the facility:
This permit amendment is intended to remove certain equipment that are no longer in service or no longer emit regulated air pollutants. This amendment calls attention to permit references that must be changed: it also seeks to modify language regarding visible emission observations.

| 14A. Provide the date of anticipated installation or change: | 14B. Date of anticipated Start-Up if a permit is granted: |
|---|---|
| – If this is an **After-The-Fact** permit application, provide the date upon which the proposed change did happen: various | N/A |

14C. Provide a **Schedule** of the planned **Installation** of/**Change** to and **Start-Up** of each of the units proposed in this permit application as **Attachment C** (if more than one unit is involved).

15. Provide maximum projected **Operating Schedule** of activity/activities outlined in this application:
Hours Per Day 24 Days Per Week 7 Weeks Per Year52

16. Is demolition or physical renovation at an existing facility involved? ☐ **YES** ☒ **NO**

17. **Risk Management Plans.** If this facility is subject to 112(r) of the 1990 CAAA, or will become subject due to proposed changes (for applicability help see www.epa.gov/ceppo), submit your **Risk Management Plan (RMP)** to U. S. EPA Region III.

18. **Regulatory Discussion.** List all Federal and State air pollution control regulations that you believe are applicable to the proposed process *(if known)*. A list of possible applicable requirements is also included in Attachment S of this application (Title V Permit Revision Information). Discuss applicability and proposed demonstration(s) of compliance *(if known)*. Provide this information as **Attachment D.**

## *Section II. Additional attachments and supporting documents.*

19. Include a check payable to WVDEP – Division of Air Quality with the appropriate **application fee** (per 45CSR22 and 45CSR13).

20. Include a **Table of Contents** as the first page of your application package.

21. Provide a **Plot Plan,** e.g. scaled map(s) and/or sketch (es) showing the location of the property on which the stationary source(s) is or is to be located as **Attachment E** (Refer to ***Plot Plan Guidance***)
– Indicate the location of the nearest occupied structure (e.g. church, school, business, residence).

22. Provide a **Detailed Process Flow Diagram(s)** showing each proposed or modified emissions unit, emission point and control device as **Attachment F.**

23. Provide a **Process Description** as **Attachment G.**
– Also describe and quantify to the extent possible all changes made to the facility since the last permit review (if applicable).

***All of the required forms and additional information can be found under the Permitting Section of DAO's website, or requested by phone.***

24. Provide **Material Safety Data Sheets (MSDS)** for all materials processed, used or produced as **Attachment H.**
– For chemical processes, provide a MSDS for each compound emitted to the air.

25. Fill out the **Emission Units Table** and provide it as **Attachment I.**

26. Fill out the **Emission Points Data Summary Sheet (Table 1 and Table 2)** and provide it as **Attachment J.**

27. Fill out the **Fugitive Emissions Data Summary Sheet** and provide it as **Attachment K.**

28. Check all applicable **Emissions Unit Data Sheets** listed below:

☐ Bulk Liquid Transfer Operations
☒ Chemical Processes
☐ Concrete Batch Plant
☐ Grey Iron and Steel Foundry
☐ General Emission Unit, specify
☐ Haul Road Emissions
☐ Hot Mix Asphalt Plant
☐ Incinerator
☐ Indirect Heat Exchanger
☐ Quarry
☐ Solid Materials Sizing, Handling and Storage Facilities
☐ Storage Tanks

Fill out and provide the **Emissions Unit Data Sheet(s)** as **Attachment L.**

29. Check all applicable **Air Pollution Control Device Sheets** listed below:

☐ Absorption Systems
☐ Adsorption Systems
☐ Afterburner
☐ Baghouse
☐ Condenser
☐ Electrostatic Precipitator
☐ Flare
☐ Mechanical Collector
☐ Wet Collecting System
☐ Other Collectors, specify

Fill out and provide the **Air Pollution Control Device Sheet(s)** as **Attachment M.**

30. Provide all **Supporting Emissions Calculations** as **Attachment N,** or attach the calculations directly to the forms listed in Items 28 through 31.

31. **Monitoring, Recordkeeping, Reporting and Testing Plans.** Attach proposed monitoring, recordkeeping, reporting and testing plans in order to demonstrate compliance with the proposed emissions limits and operating parameters in this permit application. Provide this information as **Attachment O.**

➢ Please be aware that all permits must be practically enforceable whether or not the applicant chooses to propose such measures. Additionally, the DAQ may not be able to accept all measures proposed by the applicant. If none of these plans are proposed by the applicant, DAQ will develop such plans and include them in the permit.

32. **Public Notice.** At the time that the application is submitted, place a **Class I Legal Advertisement** in a newspaper of general circulation in the area where the source is or will be located (See 45CSR§13-8.3 through 45CSR§13-8.5 and ***Example Legal Advertisement*** for details). Please submit the **Affidavit of Publication as Attachment P** immediately upon receipt.

33. **Business Confidentiality Claims.** Does this application include confidential information (per 45CSR31)?

☐ **YES** ☒ **NO**

➢ If **YES,** identify each segment of information on each page that is submitted as confidential and provide justification for each segment claimed confidential, including the criteria under 45CSR§31-4.1, and in accordance with the DAQ's ***"Precautionary Notice – Claims of Confidentiality"*** guidance found in the ***General Instructions*** as **Attachment Q.**

## *Section III. Certification of Information*

34. **Authority/Delegation of Authority.** Only required when someone other than the responsible official signs the application. Check applicable **Authority Form** below:

☐ Authority of Corporation or Other Business Entity
☐ Authority of Governmental Agency
☐ Authority of Partnership
☐ Authority of Limited Partnership

Submit completed and signed **Authority Form** as **Attachment R.**

***All of the required forms and additional information can be found under the Permitting Section of DAQ's website, or requested by phone.***

35A. **Certification of Information.** To certify this permit application, a Responsible Official (per 45CSR§13-2.22 and 45CSR§30-2.28) or Authorized Representative shall check the appropriate box and sign below.

***Certification of Truth, Accuracy, and Completeness***

I, the undersigned ☒ **Responsible Official** / ☐ **Authorized Representative,** hereby certify that all information contained in this application and any supporting documents appended hereto, is true, accurate, and complete based on information and belief after reasonable inquiry I further agree to assume responsibility for the construction, modification and/or relocation and operation of the stationary source described herein in accordance with this application and any amendments thereto, as well as the Department of Environmental Protection, Division of Air Quality permit issued in accordance with this application, along with all applicable rules and regulations of the West Virginia Division of Air Quality and W.Va. Code § 22-5-1 et seq. (State Air Pollution Control Act). If the business or agency changes its Responsible Official or Authorized Representative, the Director of the Division of Air Quality will be notified in writing within 30 days of the official change.

***Compliance Certification***

Except for requirements identified in the Title V Application for which compliance is not achieved, I, the undersigned hereby certify that, based on information and belief formed after reasonable inquiry, all air contaminant sources identified in this application are in compliance with all applicable requirements.

SIGNATURE _____ *(Please use blue ink)* DATE: Aug 20, 2015 *(Please use blue ink)*

| | | |
|---|---|---|
| 35B. Printed name of signee: Robert J. Fehrenbacher | | 35C. Title: Plant Manager |
| 35D. E-mail: robert.j.fehrenbacher@chemours.com | 36E. Phone: 304-863-4305 | 36F. FAX: 304-863-4962 |
| 36A. Printed name of contact person (if different from above): David F. Altman | | 36B. Title: Sr. Env. Control Consult. |
| 36C. E-mail: david.f.altman@chemours.com | 36D. Phone: 304-863-4271 | 36E. FAX: 304-863-4862 |

**PLEASE CHECK ALL APPLICABLE ATTACHMENTS INCLUDED WITH THIS PERMIT APPLICATION:**

- ☒ **Attachment A: Business Certificate**
- ☒ **Attachment B: Map(s)**
- ☒ **Attachment C: Installation and Start Up Schedule**
- ☒ **Attachment D: Regulatory Discussion**
- ☒ **Attachment E: Plot Plan**
- ☒ **Attachment F: Detailed Process Flow Diagram(s)**
- ☒ **Attachment G: Process Description**
- ☐ **Attachment H: Material Safety Data Sheets (MSDS)**
- ☐ **Attachment I: Emission Units Table**
- ☐ **Attachment J: Emission Points Data Summary Sheet**
- ☐ **Attachment K: Fugitive Emissions Data Summary Sheet**
- ☐ **Attachment L: Emissions Unit Data Sheet(s)**
- ☐ **Attachment M: Air Pollution Control Device Sheet(s)**
- ☐ **Attachment N: Supporting Emissions Calculations**
- ☐ **Attachment O: Monitoring/Recordkeeping/Reporting/Testing Plans**
- ☐ **Attachment P: Public Notice**
- ☐ **Attachment Q: Business Confidential Claims**
- ☐ **Attachment R: Authority Forms**
- ☒ **Attachment S: Title V Permit Revision Information**
- ☐ **Application Fee**

***Please mail an original and three (3) copies of the complete permit application with the signature(s) to the DAQ, Permitting Section, at the address listed on the first page of this application. Please DO NOT fax permit applications***

***FOR AGENCY USE ONLY – IF THIS IS A TITLE V SOURCE:***

- ☐ ***Forward 1 copy of the application to the Title V Permitting Group and:***
- ☐ ***For Title V Administrative Amendments:***
  - ☐ ***NSR permit writer should notify Title V permit writer of draft permit,***
- ☐ ***For Title V Minor Modifications:***
  - ☐ ***Title V permit writer should send appropriate notification to EPA and affected states within 5 days of receipt,***
  - ☐ ***NSR permit writer should notify Title V permit writer of draft permit.***
- ☐ ***For Title V Significant Modifications processed in parallel with NSR Permit revision:***
  - ☐ ***NSR permit writer should notify a Title V permit writer of draft permit,***
  - ☐ ***Public notice should reference both 45CSR13 and Title V permits,***
  - ☐ ***EPA has 45 day review period of a draft permit.***

***All of the required forms and additional information can be found under the Permitting Section of DAQ's website, or requested by phone.***

# Attachment A

## Business Certificate

# WEST VIRGINIA
# STATE TAX DEPARTMENT
# BUSINESS REGISTRATION CERTIFICATE

ISSUED TO:
**THE CHEMOURS COMPANY FC, LLC**
**8480 DUPONT RD**
**WASHINGTON, WV 26181-8398**

BUSINESS REGISTRATION ACCOUNT NUMBER: **2303-3963**

This certificate is issued on: 10/27/2014

*This certificate is issued by the West Virginia State Tax Commissioner in accordance with Chapter 11, Article 12, of the West Virginia Code*

*The person or organization identified on this certificate is registered to conduct business in the State of West Virginia at the location above.*

This certificate is not transferrable and must be displayed at the location for which issued

This certificate shall be permanent until cessation of the business for which the certificate of registration was granted or until it is suspended, revoked or cancelled by the Tax Commissioner.

Change in name or change of location shall be considered a cessation of the business and a new certificate shall be required.

TRAVELING/STREET VENDORS: Must carry a copy of this certificate in every vehicle operated by them. CONTRACTORS, DRILLING OPERATORS, TIMBER/LOGGING OPERATIONS: Must have a copy of this certificate displayed at every job site within West Virginia.

atL006 v.4
L1658939968

# Attachment A
# Map to Facilities

## Wood County Airport to Site

Exit Airport Rd to Rt 31-S (right)
Rt 31-S to Rt 2-S (right)
Rt 2 S to I-77 S
Rt 50 W (Corridor D)
Rt 892 to Site (left at traffic light)
WashWorks Site on your right ~1 mile

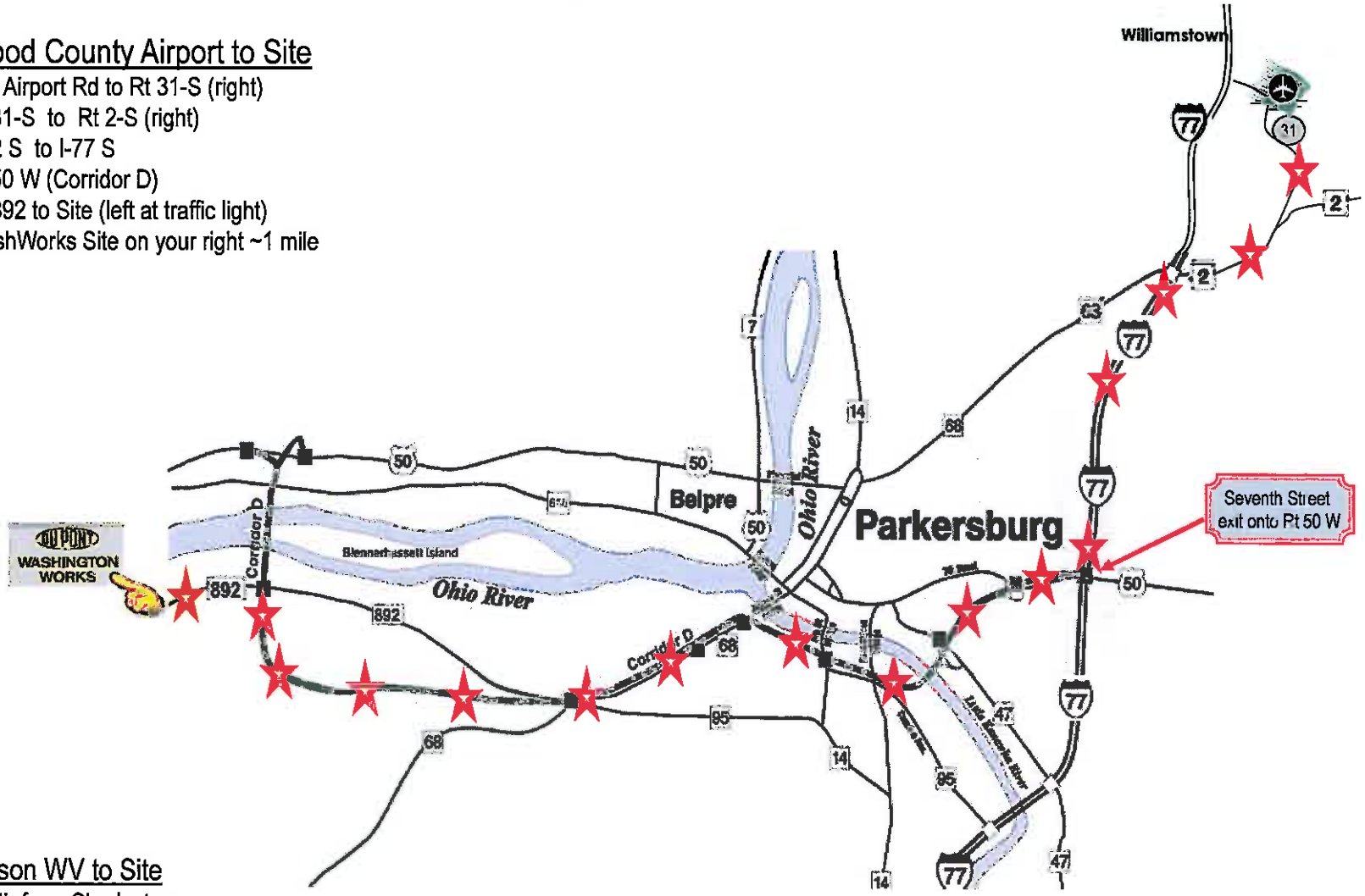


## Charleson WV to Site

I-77 north from Charleston
Rt 50 W (Corridor D) take to Ohio
Rt 892 to Site (left at traffic light)
WashWorks Site on your right ~1 mile

## Airport to Comfort Inn

Exit Airport Rd to Rt 31-S (right)
Rt 31-S to Rt 2-S (right)
Rt 2 S to Rt 68 S (Emerson Avenue)
Follow Rt 68 S to Rt 14 N
Comfort Inn is on left (near Red Lobster)

# Attachment C
# Schedule

**There is no implementation schedule as this is an "after-the-fact" permit change. Chemours no longer uses APFO in the facilities for manufacturing or other purposes.**

# Attachment D

## Regulatory Discussion

Applicable Regulatory Discussion

This process area is covered by the following state regulations:
1. 45CSR4
2. 45CSR7
3. 45CSR13
4. 45CSR21
5. 45CSR29
6. 45CSR30

This process area operation is currently covered by permit R13-2365G and R13-3223.

**RACT**

45CSR21-40.3.c requires RACT analysis on a case by case basis for those VOC emissions greater than 6 pph which are constructed, modified, or begin operation after the date 45CSR 21 becomes effective. Permit R13-3223 requires RACT analysis for any increase in VOC from sources listed in R13-3223. There are no changes

**PSD**

As of January 2, 2011, pursuant to actions taken by the USEPA, Greenhouse Gases (GHGs) became a regulated pollutant under the major NSR program. As such, an evaluation must be done for any increase in GHG emissions resulting from construction or modification to determine PSD applicability per 40 CFR 52.21. There are no new emissions of components listed in table A-1 of 40 CFR 98.2 therefore PSD for GHG does not apply.

**Ammonium Perfluorooctanate**

This material was used as a surfactant in the process. Use of the material in the process stopped prior to 12/2014 and all affected materials have been removed.

**Requested Changes Summary for R13-2365**

| Permit No. | Condition No. | Description of Proposed Permit Change |
|---|---|---|
| R13-2365G | Table A.1. | For emission point C1FSE, Remove the APFO emission limitations found in the table. Eliminate the reference to APFO found in the footnote for Table A.1. |
| R13-2365G | A.4. | Eliminate entire condition and replace with "The permittee shall not buy, manufacture, or use APFO in any of the covered facilities |
| R13-2365G | A.5 | Eliminate the entire condition and replace with "Reserved" |
| R13-2365G | B.7 | Eliminate the entire condition and replace with "Reserved" |
| R13-2365G | Attachment B | The end column labelled APFO should be eliminated from the Table |
| R13-2365G | Attachment C | Remove the entire Table dealing with the annual emissions for APFO |

# Attachment E

## Plot Plan

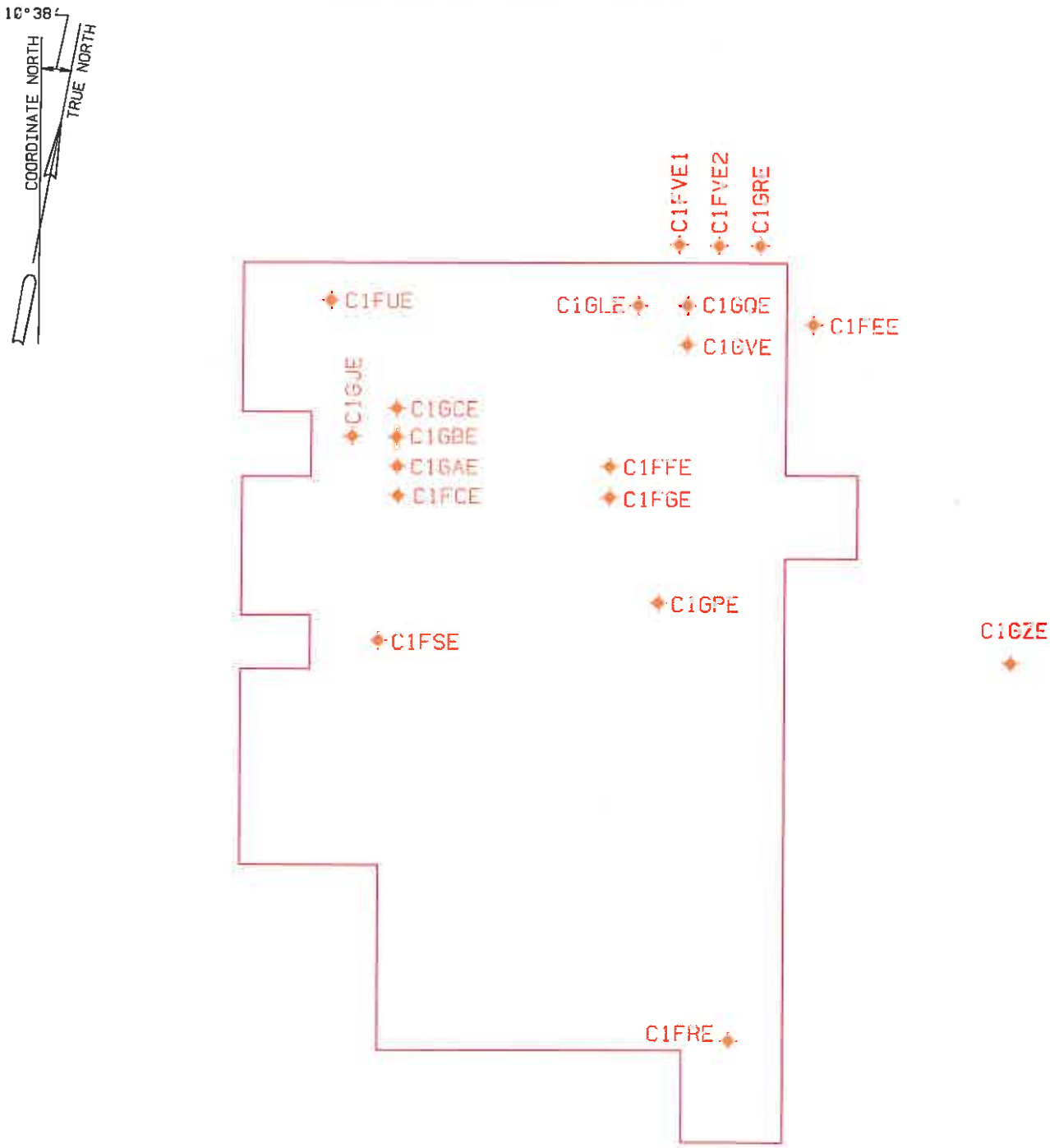


PROCESS AREA C-1
PERMIT APPLICATION

DAVE DRENNEN 9-29-04
SCALE: 1"=30'

WWM666

# Attachment F

## Detailed Process Flow Diagrams

W1505477

ANALYZE FOR SAFETY, ECOLOGY, AND MINIMUM ESSENTIAL DESIGN

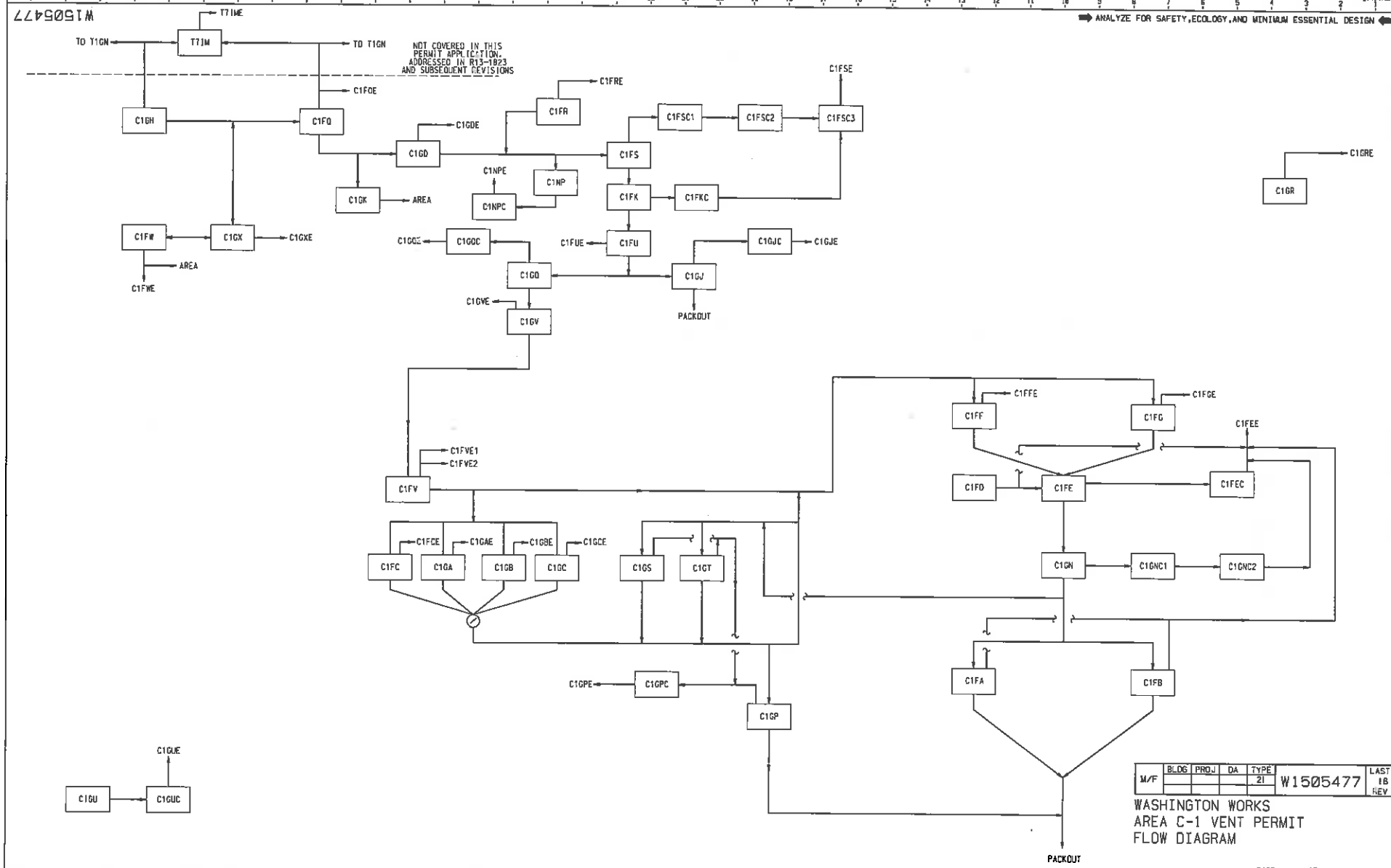


| M/F | BLDG | PROJ | DA | TYPE | | LAST |
|---|---|---|---|---|---|---|
| | | | | 21 | W1505477 | 18 REV |

WASHINGTON WORKS
AREA C-1 VENT PERMIT
FLOW DIAGRAM

PAGE ____ OF ____

| PROJ | NO | REVISION | RVSD | CHKD | APPD | DATE | PROJ | NO | REVISION | RVSD | CHKD | APPD | DATE | PROJ | NO | REVISION | RVSD | CHKD | APPD | DATE | PROJ | NO | REVISION | RVSD | CHKD | APPD | DATE |
|---|---|---|---|---|---|---|---|---|---|---|---|---|---|---|---|---|---|---|---|---|---|---|---|---|---|---|---|
| | | | | | | | | | | | | | | | 11 | DELETE C1GH, C1GK, C1GO, C1GQ, C1GQC AND C1GV. | CTK | CTK | ME | 01-19-04 | | | | | | | |
| | | | | | | | | | | | | | | | 12 | REMOVED C1FKE | DLD | DLD | ME | 9-29-04 | | 2 | WAS T41MG; DEL. T41ME | CTK | CTK | ME | 12-13-00 |
| | | | | | | | | | | | | | | | 13 | DELETED C1GD, C1GH, C1GK, & C1GQC | CTK | CTK | ME | 12-05-14 | | 3 | ADD T71ME/ADD PERMIT LINE | CTK | CTK | ME | 01-30-01 |
| | | | | | | | | | | | | | | | 14 | DELETED C1GV & C1GVE | CTK | CTK | ME | 12-05-14 | | 4 | ADD C1FD, C1VD, C1CG | CTK | CTK | ME | 02-26-01 |
| | | | | | | | | | | | | | | | 15 | ADDED C1NP, C1NPC & C1NPE | CTK | CTK | ME | 12-05-14 | | 5 | ADD APPLICATION NUMBER | CTK | CTK | ME | 03-26-01 |
| | | | | | | | | | | | | | | | 16 | ADDED C1GU, C1GUC & C1GUE | CTK | CTK | ME | 02-03-15 | | 6 | REVISE VENT CALLOUTS | CTK | CTK | ME | 05-05-01 |
| | | | | | | | | | | | | | | | | | | | | | | 7 | DELETE C1GL & C1GLC | CTK | CTK | ME | 11-05-01 |
| | | | | | | | | | | | | | | | | | | | | | | 8 | DELETE C1GR, C1GRE, C1GRC, C1GRCE, C1GRCEE AND C1GRE | CTK | CTK | ME | 04-20-02 |
| | | | | | | | | | | | | | | | | | | | | | | 9 | DELETE C1GB, C1GBE, C1CI AND C1CIE | CTK | CTK | ME | 08-15-03 |
| | | | | | | | | | | | | | | | | | | | | | | 10 | ADD C1FSC3, REMOVE C1FSC, MODIFY C1GT AND REVISE NOTE | CTK | CTK | ME | 01-19-04 |

THIS DRAWING HAS BEEN FURNISHED BY E.I. DU PONT DE NEMOURS & CO. THE INFORMATION AND KNOW-HOW THEREON MAY NOT BE USED NOR THE DRAWING REPRODUCED WITHOUT THE WRITTEN PERMISSION OF DU PONT. ALL REPRODUCTIONS IN WHOLE OR IN PART, INCLUDING VENDOR'S SHOP DRAWINGS, SHALL BEAR OR REFER TO THIS STAMP.

STANDARDS | REFERENCE DRAWINGS

=DATE=TIME= =USER=

PROJECT
SCALE NONE DATE
DRAWN TODD R. WRIGHT 11/6/00
CHECKED T. ESCALANTE 11/6/00
APPROVED L. MIKE EVANS 11/6/00
DESIGN RELEASE
APPROVED
CONSTR. RELEASE

E.I.DU PONT DE NEMOURS & CO., INC.
WILMINGTON, DELAWARE
DUPONT ENGINEERING

W1505477

W1505477.dgn 4/3/2015 2:12:50 AM created from MicroStation

# Attachment G

## Process Description

## C1-P Process Description

PFA is a copolymer of various monomers produced in a semi-batch polymerization process. The reaction requires a pre-charge of water, ethane, aqueous fluorosurfactants, water-soluble initiator salts and the monomers. During polymerization, the monomers and some make-up initiator are continually added to the reactor. The system is also designed to produce a low molecular weight Poly-TFE product, which is similar to PFA.

At batch end, un-reacted monomers will be vented down to 5 psig to the Thermal Converter (T7IMC) covered by permit 1823. When the Thermal converter is not operational, the unreacted monomers will be vented to Monomer's internal recovery device (T1GN). From 5 psig to a slight vacuum, the reactor will be vented to the atmosphere. See emissions summary sheet for vented amounts.

The aqueous emulsion produced in the reactor is transferred to the Isolation facility for further processing and then transferred to the Finishing system. Some of the aqueous surfactant added during polymerization is driven off in the drying step, and recovered by C1FSC2 and C1FSC3.

The dried polymer is pneumatically conveyed to various vessels, compacted, and then extruded to produce small pellets or cubes. A small amount of dry polymer bypasses the extruder and is packed out as fluff.

The cubes are blended in downstream facilities, and then either packed out for sale to customers, or transferred to the fluorination facilities. Material sent to the fluorination facilities is transferred into a reactor where the polymer end groups react with a fluorine/nitrogen mixture to produce a more stable product. The un-reacted fluorine and reaction byproducts are vented to C1FEC. The cubes are then cooled, sampled, and packed out for sale to customers.

The changes submitted in this Class II Administrative update R13-2365F include:

1. Revised emissions calculations to reinstate emissions from the ingredient feed system (C1FW) through the reactor (C1FQ) to emission point (C1FQE), which were inadvertently removed in the application filed for R13-2365E. This includes increasing the hourly VOC emission rate for C1FQE from 21.00 to 21.76 tons per year.
2. Revised emissions calculations to reinstate emissions from the ingredient feed system (C1FW) to emission point C1FWE, which were inadvertently removed in the application filed for R13-2365E. This includes increasing the hourly VOC emission rate from 26.55 pph to 32.2 pph, and from 0.29 tons per year VOCs to 0.35 tons per year.
3. Revised calculations to include acetonitrile being emitted in <0.01 lbs/hr and <0.01 tons/year from source C1FW to emission point C1FWE.
4. Revised calculations for C1GX (ingredient system charge pot) to account for emissions that occur while inventorying the charge pot, increasing total VOC emissions from emission point C1GXE from 0.29 to 0.31 tons/year.
5. Added C2EQ (an oven) from area C2 as source C1GZ, venting to a vacuum pump (C1GZC), then to emission point C1GZE. The atmospheric emissions from the oven are 0.51 lbs/hr and 0.18 tons/year VOCs, hydrofluoric acid emissions are expected to be trace, as are PM emissions; CO emissions are estimated to be 0.01 lbs/hr and 0.01 tons/year.

# Attachment S

## Title V Permit Revision Information

# Attachment S
# Title V Permit Revision Information

| 1. New Applicable Requirements Summary | |
|---|---|
| Mark all applicable requirements associated with the changes involved with this permit revision. | |
| ☐ SIP | ☐ FIP |
| ☒ Minor source NSR (45CSR13) | ☐ PSD (45CSR14) |
| ☐ NESHAP (45CSR15) | ☐ Nonattainment NSR (45CSR19) |
| ☐ Section 111 NSPS (Subpart _____) | ☐ Section 112(d) MACT standards |
| ☐ Section 112(g) Case-by-case MACT | ☐ 112(r) RMP |
| ☐ Section 112(i) Early reduction of HAP | ☐ Consumer/commercial prod. reqts., section 183(e) |
| ☐ Section 129 Standards/Reqts. | ☐ Stratospheric ozone (Title VI) |
| ☐ Tank vessel reqt., section 183(f) | ☐ Emissions cap 45CSR§30-2.6.1 |
| ☐ NAAQS, increments or visibility (temp. sources) | ☐ 45CSR27 State enforceable only rule |
| ☐ 45CSR4 State enforceable only rule | ☐ Acid Rain (Title IV, 45CSR33) |
| ☐ Emissions Trading and Banking (45CSR28) | ☐☐ Compliance Assurance Monitoring (40CFR64)[1] |
| ☐ $NO_x$ Budget Trading Program Non-EGUs (45CSR1) | ☐ $NO_x$ Budget Trading Program EGUs (45CSR26) |
| [1] If this box is checked, please include **Compliance Assurance Monitoring (CAM) Form(s)*** for each Pollutants Specific Emission Unit (PSEU). | |

| 2. Non Applicability Determinations |
|---|
| List all requirements, which the source has determined to be not applicable to this permit revision and for which a permit shield is requested. The listing shall also include the rule citation and the rationale for the determination.<br><br>The proposed changes do not trigger any new applicable requirements nor do they invalidate any previous non-applicability determinations. |
| ☐ Permit Shield is Requested *(not applicable to Minor Modifications)* |

| 3. Change in Potential Emissions | | |
|---|---|---|
| Pollutant | Change in Potential Emissions (+ or -), lb/hr | Change in Potential Emissions (+ or -), TPY |
| **Ammonium Perfluorooctanate (APFO)** | **-0.220** | **-0.543** |
| | | |
| | | |

| 4. List other Active NSR Permits / Permit Determinations / Consent Orders associated with this permit revision (if any): | | |
|---|---|---|
| NSR Permit and/or Consent Order Number | Date of Issuance | NSR Permit / Consent Order Condition Number |
| R13-2365G | 6/23/2015 | Table A.1., Section A.4., Section A.5., Section B.7.,Attachments B and C. |
| R30-10700182-2010 | 12/8/2014 | Table 4.1.1., Section 3.1.12, Section 3.1.13., Section 3.2.1., Appendix A – Attachment B and Appendix A – Attachment C. |
| | | |

| 5. Inactive Permits / Obsolete Permit or Obsolete Consent Order(s) Conditions Associated With This Permit Revision | | |
|---|---|---|
| NSR Permit and/or Consent Order Number | Date of Issuance | NSR Permit / Consent Order Condition Number |
| | | |
| | | |
| | | |

**6. Suggested Title V Draft Permit Language**

Are there any changes involved with this Title V Permit revision outside of the scope of the NSR Permit revision? ☐ Yes ☒ No

If Yes, describe the changes below. Also, please provide suggested Title V Draft Permit language for these changes (including all applicable requirements and any monitoring /recordkeeping/ reporting requirements associated with the changes), or attach a marked up pages of current Title V Permit. Please include appropriate citations for those requirements being added / revised.

See the table below for associated permit condition changes based on the attached R13-2365G update.

| Permit No. | Condition No. | Description of Proposed Permit Change |
|---|---|---|
| R30-10700182 | 3.1.12 | Removal of this condition and replace with a "Reserved" notation. |
| R30-10700182 | 3.1.13 | Removal of this condition and replace with a "Reserved" notation. |
| R30-10700182 | 3.2.1 | Removal of this condition and replace with a "Reserved" notation. |
| R30-10700182 | Table 4.1.1. | For emission point C1FSE, Remove the emission of APFO |
| | | Remove the foot note from Table 4.1.1 referencing Ammonium Perfluorooctanate (APFO) |
| | | |
| R30-10700182 | Appendix A – Attachment B | Remove columns from Attachment B referencing APFO |
| R30-10700182 | Appendix A – Attachment C | Remove APFO table from Attachment C. |

**7. Certification For Use Of Minor Modification Procedures** *(for Minor Modifications only)*

| | |
|---|---|
| *Note:* | *This certification must be signed by a responsible official. Minor Modification applications without a signed certification will be returned as incomplete. The criteria for allowing the use of Minor Modification Procedures are as follows:* |

i. Proposed changes do not violate any applicable requirement;
ii. Proposed changes do not involve significant changes to existing monitoring, reporting, or recordkeeping requirements in the permit;
iii. Proposed changes do not require or change a case-by-case determination of an emission limitation or other standard, or a source-specific determination for temporary sources of ambient air quality impacts, or a visibility increment analysis;
iv. Proposed changes do not seek to establish or change a permit term or condition for which there is no underlying applicable requirement and which permit or condition has been used to avoid an applicable requirement to which the source would otherwise be subject (synthetic minor). Such terms and conditions include, but are not limited to a federally enforceable emissions cap used to avoid classification as a modification under any provision of Title I or any alternative emissions limit approved pursuant to regulations promulgated under § 112(j)(5) of the Clean Air Act;
v. Proposed changes do not involve preconstruction review under Title I of the Clean Air Act or 45CSR14 and 45CSR19;
vi. Proposed changes are not required under any rule of the Director to be processed as a significant modification;

Notwithstanding subparagraph 6.5.a.1.A. of 45CSR30 (items i through vi above), minor permit modification procedures may be used for permit modifications involving the use of economic incentives, marketable permits, emissions trading, and other similar approaches, to the extent that such minor permit modification procedures are explicitly provided for in rules of the Director which are approved by the U.S. EPA as a part of the State Implementation Plan under the Clean Air Act, or which may be otherwise provided for in the Title V operating permit issued under this rule.

**Pursuant to Section 6.5.a.2.C of 45CSR30, the proposed modification contained herein meets the criteria for use of Minor permit modification procedures as set forth in Section 6.5.a.1. The use of Minor permit modification procedures are hereby requested for processing of this application.**

| | | | |
|---|---|---|---|
| (Signed): | *(Please use blue ink)* | Date: | Aug / 20 / 2015 *(Please use blue ink)* |
| Named (typed): | Robert J. Fehrenbacher | Title: | Plant Manager |

***NOTE:*** ***(1) For Administrative Amendments, the ability to operate with the changes described in this permit application is granted upon submittal of the application.***

***(2) For Minor Modifications, the ability to operate with the changes described in this permit application is granted after seven (7) days from the submittal of the application, or upon issuance of the NSR permit, whichever is later.***

***(3) For Significant Modifications, the ability to operate is granted upon issuance of the modified Title V permit.***

** All of the required forms and additional information can be found and downloaded from DAQ's Permitting Section site* **www.wvdep.org/daq,** *requested by phone (304) 926-0475, and/or obtained through the mail.*