The Chemours Company
Washington Works
8480 DuPont Road
PO Box 1217
Washington, WV 26181

304-863-4000
chemours.com

August 21, 2015

RECEIVED
AUG 26 2015
DIVISION OF AIR QUALITY

CERTIFIED MAIL – 7014 1820 0001 2876 1123
RETURN RECEIPT REQUESTED

Mr. William F. Durham, Director
Division of Air Quality
WV Department of Environmental Protection
601 57th Street, SE
Charleston, WV 25304-2345

Modification to Permit R13-1953I – Fluoropolymer Resin Manufacturing

Dear Mr. Durham:

Attached you will find the application forms for a Class I Administrative update for R13-1953I.

This permit revision is to perform updates to the existing permit for the elimination of process specific requirements for Ammonium Perfluorooctanate (APFO). The current limitations and requirements for APFO will be replaced with a single requirement for the facilities to not "manufacture, use or purchase" the material.

We have also included the Attachment S form to allow inclusion of the changes into the Title V permit for Segment 2 of 14 Fluoropolymer Manufacturing.

If you have questions or concerns with this permit application please contact Mr. David F. Altman by telephone at (304) 863-4271 or Mr. John J. Mentink by telephone at (304) 863-4033 or by email at john.j.mentink@chemours.com.

Very truly yours,

David F. Altman
EHS Competency Manager
Chemours Washington Works

I.D. No. 107c0180 Reg. 13-1953S
Company Chemours
Facility WW Region 3
Initials MC

Enclosure
DFA:jjm/slb

CC: Ms. Carrie McCumbers – Title V Permitting Supervisor
Division of Air Quality
WV Department of Environmental Protection
601 57th Street, SE
Charleston, WV 25304-2345

Mr. M. Egnor – Permitting Engineer
Division of Air Quality
WV Department of Environmental Protection
601 57th Street, SE
Charleston, WV 25304-2345

Table of Content
R13-1953 Update

WEST VIRGINIA DEPARTMENT OF ENVIRONMENTAL PROTECTION
DIVISION OF AIR QUALITY
601 57th Street, SE
Charleston, WV 25304
(304) 926-0475
www.dep.wv.gov/daq

APPLICATION FOR NSR PERMIT AND TITLE V PERMIT REVISION (OPTIONAL)

PLEASE CHECK ALL THAT APPLY TO **NSR (45CSR13)** (IF KNOWN):
☐ **CONSTRUCTION** ☐ **MODIFICATION** ☐ **RELOCATION**
☒ **CLASS I ADMINISTRATIVE UPDATE** ☐ **TEMPORARY**
☐ **CLASS II ADMINISTRATIVE UPDATE** ☒ **AFTER-THE-FACT**

PLEASE CHECK TYPE OF **45CSR30 (TITLE V)** REVISION (IF ANY):
☒ **ADMINISTRATIVE AMENDMENT** ☐ **MINOR MODIFICATION**
☐ **SIGNIFICANT MODIFICATION**
IF ANY BOX ABOVE IS CHECKED, INCLUDE TITLE V REVISION INFORMATION AS **ATTACHMENT S** TO THIS APPLICATION

FOR TITLE V FACILITIES ONLY: Please refer to "Title V Revision Guidance" in order to determine your Title V Revision options (Appendix A, "Title V Permit Revision Flowchart") and ability to operate with the changes requested in this Permit Application.

Section I. General

1. Name of applicant *(as registered with the WV Secretary of State's Office):*
The Chemours Company FC, LLC

2. Federal Employer ID No. ***(FEIN):***
46-5626518

3. Name of facility *(if different from above):*
Washington Works Facility

4. The applicant is the:
☐ **OWNER** ☐ **OPERATOR** ☒ **BOTH**

5A. Applicant's mailing address:
Building 1, Washington Works
Washington WV, 26181-1217

5B. Facility's present physical address:
8480 DuPont Road
Washington, WV 26181

6. **West Virginia Business Registration.** Is the applicant a resident of the State of West Virginia? ☒ **YES** ☐ **NO**
- If **YES,** provide a copy of the **Certificate of Incorporation/Organization/Limited Partnership** (one page) including any name change amendments or other Business Registration Certificate as **Attachment A.**
- If **NO,** provide a copy of the **Certificate of Authority/Authority of L.L.C./Registration** (one page) including any name change amendments or other Business Certificate as **Attachment A.**

7. If applicant is a subsidiary corporation, please provide the name of parent corporation:

8. Does the applicant own, lease, have an option to buy or otherwise have control of the *proposed site?* ☒ **YES** ☐ **NO**
- If **YES,** please explain: Owns site
- If **NO,** you are not eligible for a permit for this source.

9. Type of plant or facility (stationary source) to be **constructed, modified, relocated, administratively updated** or **temporarily permitted** (e.g., coal preparation plant, primary crusher, etc.): Chemical Manufacturing

10. North American Industry Classification System **(NAICS)** code for the facility:
325199

11A. DAQ Plant ID No. (for existing facilities only):
107-00182

11B. List all current 45CSR13 and 45CSR30 (Title V) permit numbers associated with this process (for existing facilities only):
R13-1953I, R13-3223, R30-107-00182 Segment 2 of 14

All of the required forms and additional information can be found under the Permitting Section of DAQ's website, or requested by phone.

12A.

- For **Modifications, Administrative Updates** or **Temporary permits** at an existing facility, please provide directions to the *present location* of the facility from the nearest state road;
- For **Construction** or **Relocation permits,** please provide directions to the *proposed new site location* from the nearest state road. Include a **MAP as Attachment B.**

Take the Route 50 bypass towards Ohio from I-77. Exit the Route 50 bypass at the last exit in West Virginia. At the light turn left and continue on DuPont road for approximately ½ - ¾ mile. The main plant entrance will be visible on your right.

12.B. New site address (if applicable):	12C. Nearest city or town:	12D. County:
N/A	Parkersburg	Wood
12.E. UTM Northing (KM): 4346.833	12F. UTM Easting (KM): 442.3767	12G. UTM Zone: 17S

13. Briefly describe the proposed change(s) at the facility:
This permit amendment is intended to remove certain equipment that are no longer in service or no longer emit regulated air pollutants. This amendment calls attention to permit references that must be changed; it also seeks to modify language regarding visible emission observations.

14A. Provide the date of anticipated installation or change:	14B. Date of anticipated Start-Up if a permit is granted:
– If this is an **After-The-Fact** permit application, provide the date upon which the proposed change did happen: various	N/A

14C. Provide a **Schedule** of the planned **Installation** of/**Change** to and **Start-Up** of each of the units proposed in this permit application as **Attachment C** (if more than one unit is involved).

15. Provide maximum projected **Operating Schedule** of activity/activities outlined in this application:
Hours Per Day 24 Days Per Week 7 Weeks Per Year52

16. Is demolition or physical renovation at an existing facility involved? ☐ **YES** ☒ **NO**

17. **Risk Management Plans.** If this facility is subject to 112(r) of the 1990 CAAA, or will become subject due to proposed changes (for applicability help see www.epa.gov/ceppo), submit your **Risk Management Plan (RMP)** to U. S. EPA Region III.

18. **Regulatory Discussion.** List all Federal and State air pollution control regulations that you believe are applicable to the proposed process *(if known)*. A list of possible applicable requirements is also included in Attachment S of this application (Title V Permit Revision Information). Discuss applicability and proposed demonstration(s) of compliance *(if known)*. Provide this information as **Attachment D.**

Section II. Additional attachments and supporting documents.

19. Include a check payable to WVDEP – Division of Air Quality with the appropriate **application fee** (per 45CSR22 and 45CSR13).

20. Include a **Table of Contents** as the first page of your application package.

21. Provide a **Plot Plan,** e.g. scaled map(s) and/or sketch (es) showing the location of the property on which the stationary source(s) is or is to be located as **Attachment E** (Refer to ***Plot Plan Guidance***)
– Indicate the location of the nearest occupied structure (e.g. church, school, business, residence).

22. Provide a **Detailed Process Flow Diagram(s)** showing each proposed or modified emissions unit, emission point and control device as **Attachment F.**

23. Provide a **Process Description** as **Attachment G.**
– Also describe and quantify to the extent possible all changes made to the facility since the last permit review (if applicable).

All of the required forms and additional information can be found under the Permitting Section of DAQ's website, or requested by phone

24. Provide **Material Safety Data Sheets (MSDS)** for all materials processed, used or produced as **Attachment H.**
– For chemical processes, provide a MSDS for each compound emitted to the air.

25. Fill out the **Emission Units Table** and provide it as **Attachment I.**

26. Fill out the **Emission Points Data Summary Sheet (Table 1 and Table 2)** and provide it as **Attachment J.**

27. Fill out the **Fugitive Emissions Data Summary Sheet** and provide it as **Attachment K.**

28. Check all applicable **Emissions Unit Data Sheets** listed below:

☐ Bulk Liquid Transfer Operations
☒ Chemical Processes
☐ Concrete Batch Plant
☐ Grey Iron and Steel Foundry
☐ General Emission Unit, specify
☐ Haul Road Emissions
☐ Hot Mix Asphalt Plant
☐ Incinerator
☐ Indirect Heat Exchanger
☐ Quarry
☐ Solid Materials Sizing, Handling and Storage Facilities
☐ Storage Tanks

Fill out and provide the **Emissions Unit Data Sheet(s)** as **Attachment L.**

29. Check all applicable **Air Pollution Control Device Sheets** listed below:

☐ Absorption Systems
☐ Adsorption Systems
☐ Afterburner
☐ Baghouse
☐ Condenser
☐ Electrostatic Precipitator
☐ Flare
☐ Mechanical Collector
☐ Wet Collecting System
☐ Other Collectors, specify

Fill out and provide the **Air Pollution Control Device Sheet(s)** as **Attachment M.**

30. Provide all **Supporting Emissions Calculations** as **Attachment N,** or attach the calculations directly to the forms listed in Items 28 through 31.

31. **Monitoring, Recordkeeping, Reporting and Testing Plans.** Attach proposed monitoring, recordkeeping, reporting and testing plans in order to demonstrate compliance with the proposed emissions limits and operating parameters in this permit application. Provide this information as **Attachment O.**

➢ Please be aware that all permits must be practically enforceable whether or not the applicant chooses to propose such measures. Additionally, the DAQ may not be able to accept all measures proposed by the applicant. If none of these plans are proposed by the applicant, DAQ will develop such plans and include them in the permit.

32. **Public Notice.** At the time that the application is submitted, place a **Class I Legal Advertisement** in a newspaper of general circulation in the area where the source is or will be located (See 45CSR§13-8.3 through 45CSR§13-8.5 and ***Example Legal Advertisement*** for details). Please submit the **Affidavit of Publication** as **Attachment P** immediately upon receipt.

33. **Business Confidentiality Claims.** Does this application include confidential information (per 45CSR31)?

☐ **YES** ☒ **NO**

➢ If **YES,** identify each segment of information on each page that is submitted as confidential and provide justification for each segment claimed confidential, including the criteria under 45CSR§31-4.1, and in accordance with the DAQ's ***"Precautionary Notice – Claims of Confidentiality"*** guidance found in the ***General Instructions*** as **Attachment Q.**

Section III. Certification of Information

34. **Authority/Delegation of Authority.** Only required when someone other than the responsible official signs the application. Check applicable **Authority Form** below:

☐ Authority of Corporation or Other Business Entity
☐ Authority of Governmental Agency
☐ Authority of Partnership
☐ Authority of Limited Partnership

Submit completed and signed **Authority Form** as **Attachment R.**

All of the required forms and additional information can be found under the Permitting Section of DAQ's website, or requested by phone.

35A. **Certification of Information.** To certify this permit application, a Responsible Official (per 45CSR§13-2.22 and 45CSR§30-2.28) or Authorized Representative shall check the appropriate box and sign below.

Certification of Truth, Accuracy, and Completeness

I, the undersigned ☒ **Responsible Official** / ☐ **Authorized Representative,** hereby certify that all information contained in this application and any supporting documents appended hereto, is true, accurate, and complete based on information and belief after reasonable inquiry I further agree to assume responsibility for the construction, modification and/or relocation and operation of the stationary source described herein in accordance with this application and any amendments thereto, as well as the Department of Environmental Protection, Division of Air Quality permit issued in accordance with this application, along with all applicable rules and regulations of the West Virginia Division of Air Quality and W.Va. Code § 22-5-1 et seq. (State Air Pollution Control Act). If the business or agency changes its Responsible Official or Authorized Representative, the Director of the Division of Air Quality will be notified in writing within 30 days of the official change.

Compliance Certification

Except for requirements identified in the Title V Application for which compliance is not achieved, I, the undersigned hereby certify that, based on information and belief formed after reasonable inquiry, all air contaminant sources identified in this application are in compliance with all applicable requirements.

SIGNATURE [signature] *(Please use blue ink)* DATE: Aug. 20, 2015 *(Please use blue ink)*

35B. Printed name of signee: Robert J. Fehrenbacher		35C. Title: Plant Manager
35D. E-mail: robert.j.fehrenbacher@chemours.com	36E. Phone: 304-863-4305	36F. FAX: 304-863-4962
36A. Printed name of contact person (if different from above): David F. Altman		36B. Title: Sr. Env. Control Consult.
36C. E-mail: david.f.altman@chemours.com	36D. Phone: 304-863-4271	36E. FAX: 304-863-4862

PLEASE CHECK ALL APPLICABLE ATTACHMENTS INCLUDED WITH THIS PERMIT APPLICATION:

- ☒ **Attachment A: Business Certificate**
- ☒ **Attachment B: Map(s)**
- ☒ **Attachment C: Installation and Start Up Schedule**
- ☒ **Attachment D: Regulatory Discussion**
- ☒ **Attachment E: Plot Plan**
- ☒ **Attachment F: Detailed Process Flow Diagram(s)**
- ☒ **Attachment G: Process Description**
- ☐ **Attachment H: Material Safety Data Sheets (MSDS)**
- ☐ **Attachment I: Emission Units Table**
- ☐ **Attachment J: Emission Points Data Summary Sheet**
- ☐ **Attachment K: Fugitive Emissions Data Summary Sheet**
- ☐ **Attachment L: Emissions Unit Data Sheet(s)**
- ☐ **Attachment M: Air Pollution Control Device Sheet(s)**
- ☐ **Attachment N: Supporting Emissions Calculations**
- ☐ **Attachment O: Monitoring/Recordkeeping/Reporting/Testing Plans**
- ☐ **Attachment P: Public Notice**
- ☐ **Attachment Q: Business Confidential Claims**
- ☐ **Attachment R: Authority Forms**
- ☒ **Attachment S: Title V Permit Revision Information**
- ☐ **Application Fee**

Please mail an original and three (3) copies of the complete permit application with the signature(s) to the DAQ, Permitting Section, at the address listed on the first page of this application. Please DO NOT fax permit applications.

FOR AGENCY USE ONLY – IF THIS IS A TITLE V SOURCE:

- ☐ ***Forward 1 copy of the application to the Title V Permitting Group and:***
- ☐ ***For Title V Administrative Amendments:***
  - ☐ ***NSR permit writer should notify Title V permit writer of draft permit,***
- ☐ ***For Title V Minor Modifications:***
  - ☐ ***Title V permit writer should send appropriate notification to EPA and affected states within 5 days of receipt,***
  - ☐ ***NSR permit writer should notify Title V permit writer of draft permit.***
- ☐ ***For Title V Significant Modifications processed in parallel with NSR Permit revision:***
  - ☐ ***NSR permit writer should notify a Title V permit writer of draft permit,***
  - ☐ ***Public notice should reference both 45CSR13 and Title V permits,***
  - ☐ ***EPA has 45 day review period of a draft permit.***

All of the required forms and additional information can be found under the Permitting Section of DAQ's website, or requested by phone.

Attachment A

Business Certificate

WEST VIRGINIA
STATE TAX DEPARTMENT
BUSINESS REGISTRATION CERTIFICATE

ISSUED TO:
THE CHEMOURS COMPANY FC, LLC
8480 DUPONT RD
WASHINGTON, WV 26181-8398

BUSINESS REGISTRATION ACCOUNT NUMBER: **2303-3963**

This certificate is issued on: 10/27/2014

This certificate is issued by
the West Virginia State Tax Commissioner
in accordance with Chapter 11, Article 12, of the West Virginia Code

The person or organization identified on this certificate is registered
to conduct business in the State of West Virginia at the location above.

This certificate is not transferrable and must be displayed at the location for which issued

This certificate shall be permanent until cessation of the business for which the certificate of registration was granted or until it is suspended, revoked or cancelled by the Tax Commissioner.

Change in name or change of location shall be considered a cessation of the business and a new certificate shall be required.

TRAVELING/STREET VENDORS: Must carry a copy of this certificate in every vehicle operated by them.
CONTRACTORS, DRILLING OPERATORS, TIMBER/LOGGING OPERATIONS: Must have a copy of this certificate displayed at every job site within West Virginia.

atL006 v.4
L1658939988

Attachment A
Map to Facilities

Wood County Airport to Site

Exit Airport Rd to Rt 31-S (right)
Rt 31-S to Rt 2-S (right)
Rt 2 S to I-77 S
Rt 50 W (Corridor D)
Rt 892 to Site (left at traffic light)
WashWorks Site on your right ~1 mile

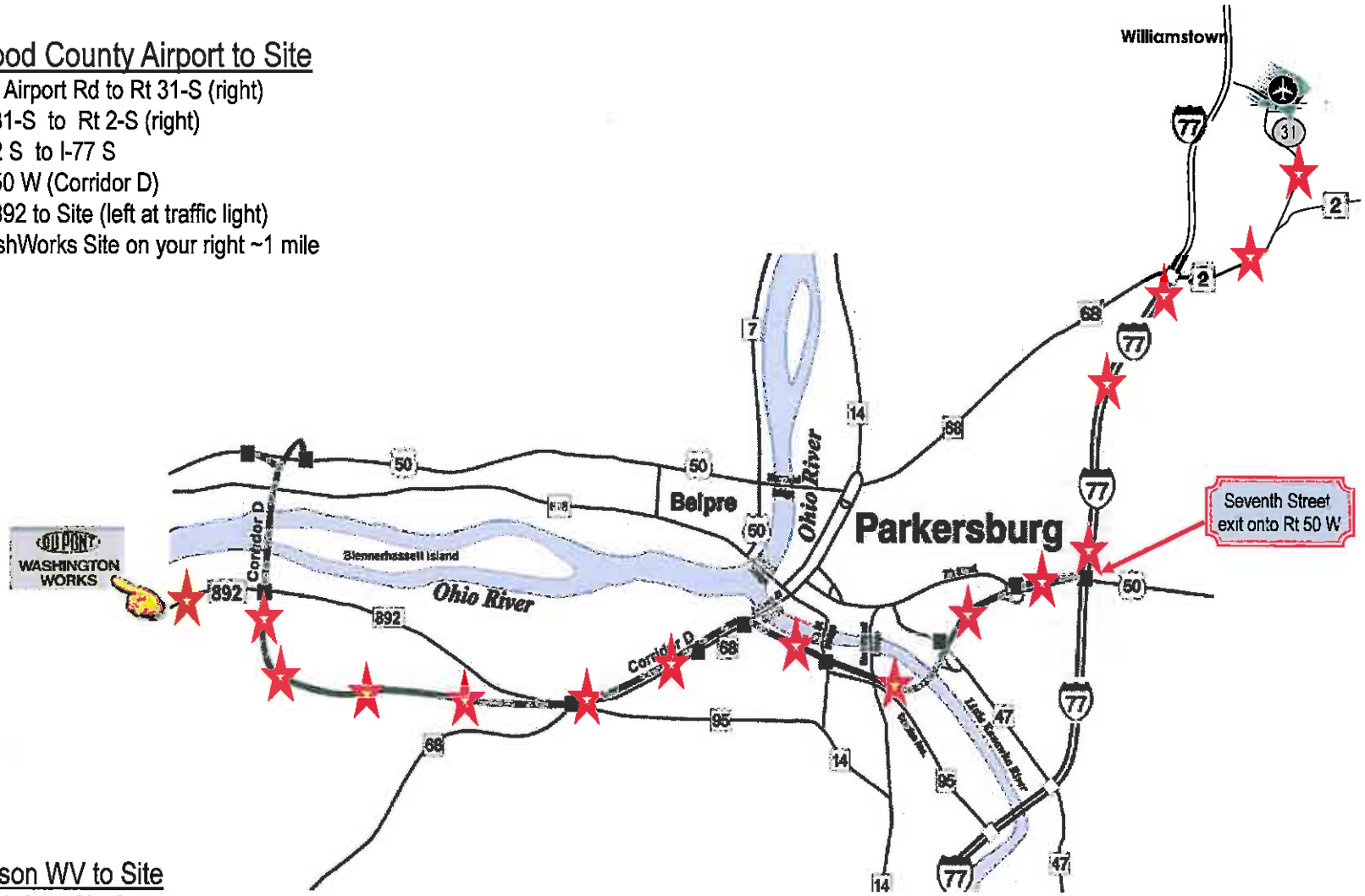

Charleson WV to Site

I-77 north from Charleston
Rt 50 W (Corridor D) take to Ohio
Rt 892 to Site (left at traffic light)
WashWorks Site on your right ~1 mile

Airport to Comfort Inn

Exit Airport Rd to Rt 31-S (right)
Rt 31-S to Rt 2-S (right)
Rt 2 S to Rt 68 S (Emerson Avenue)
Follow Rt 68 S to Rt 14 N
Comfort Inn is on left (near Red Lobster)

Attachment C
Schedule

There is no implementation schedule as this is an "after-the-fact" permit change. Chemours no longer uses APFO in the facilities for manufacturing or other purposes.

Attachment D

Regulatory Discussion

Regulatory Discussion

The following regulations apply to this production unit: West Virginia Regulations 4, 7, 13, 21, 29, 30 and US EPA MACT Standards for the Miscellaneous Organic NESHAP.

RACT
45CSR21-40.3.c requires RACT analysis on a case by case basis for those VOC emissions greater than 6 pph which are constructed, modified, or begin operation after the date 45CSR 21 becomes effective. Permit R13-3223 requires RACT analysis for any increase in VOC from sources listed in R13-3223. No increase in VOCs or other air pollutant emissions are being requested within this application.

PSD
As of January 2, 2011, pursuant to actions taken by the USEPA, Greenhouse Gases (GHGs) became a regulated pollutant under the major NSR program. As such, an evaluation must be done for any increase in GHG emissions resulting from construction or modification to determine PSD applicability per 40 CFR 52.21. There are no new emissions of components listed in table A-1 of 40 CFR 98.2 therefore PSD for GHG does not apply.

This class I permit amendment application is being filed under 45CSR13 for the following reasons:

To remove the references to Ammonium Perfluorooctanate (APFO) from the permit as the facility no longer uses the material.

The changes proposed in this Class I Administrative update R13-1953 include:

1. Remove emission point references and emission limits for Ammonium Perfluorooctanate (APFO) from the permit. The material is no longer used, manufactured or bought for use a Chemours Washington Works.

2. Insert a condition into the permit that reads as follows –

   "The permittee shall not purchase, manufacture or use APFO within the Chemours Washington Works. Facilities"

Specifically the terms of the permit which need revision are as follows:

45 CSR 13 Permit R13-1953I Requirement 4.1.5 –

This limitation on specifically APFO is to be eliminated and replaced with a requirement as recommended above in the list as #2.

45 CSR 13 Permit R13-1953I Requirement 4.1.6 – APFO Concentration Limitation.

This requirement should be removed and replaced with a "Reserved" indication pending a complete rewrite of the permit at a future date.

45 CSR 13 Permit R13-1953I Requirement 4.1.7 – APFO Modelling Requirements

This requirement should be removed and replaced with a "Reserved" indication pending a complete rewrite of the permit at a future date.

45 CSR 13 Permit R13-1953I Requirement 4.1.8 – APFO point Parameters

This requirement should be removed and replaced with a "Reserved" indication pending a complete rewrite of the permit at a future date

45 CSR 13 Permit R13-1953I Requirement 4.2.1

The footnote #1 to Table 4.2.1 should be amended to eliminate the reference to APFO. The remaining Table contents remain the same s it currently shows.

45 CSR 13 Permit R13-1953I Appendix A – Attachment B

Remove the fourth column of identified pollutants in the emissions table. This is the column that identifies APFO and requests recording maximum pph and estimated pounds per month.

45 CSR 13 Permit R13-1953I Appendix A – Attachment C

Remove the Emission point table for C2DTE specifically for APFO emitted from the emission point. It does not need replacement with another table as the other emitted pollutants are covered in other tables.

It is anticipated that these changes will be incorporated into the Title V permit with the revision of this permit and the transfer of the updated requirements to the Fluoropolymers Title V permit.

Attachment E

Plot Plan

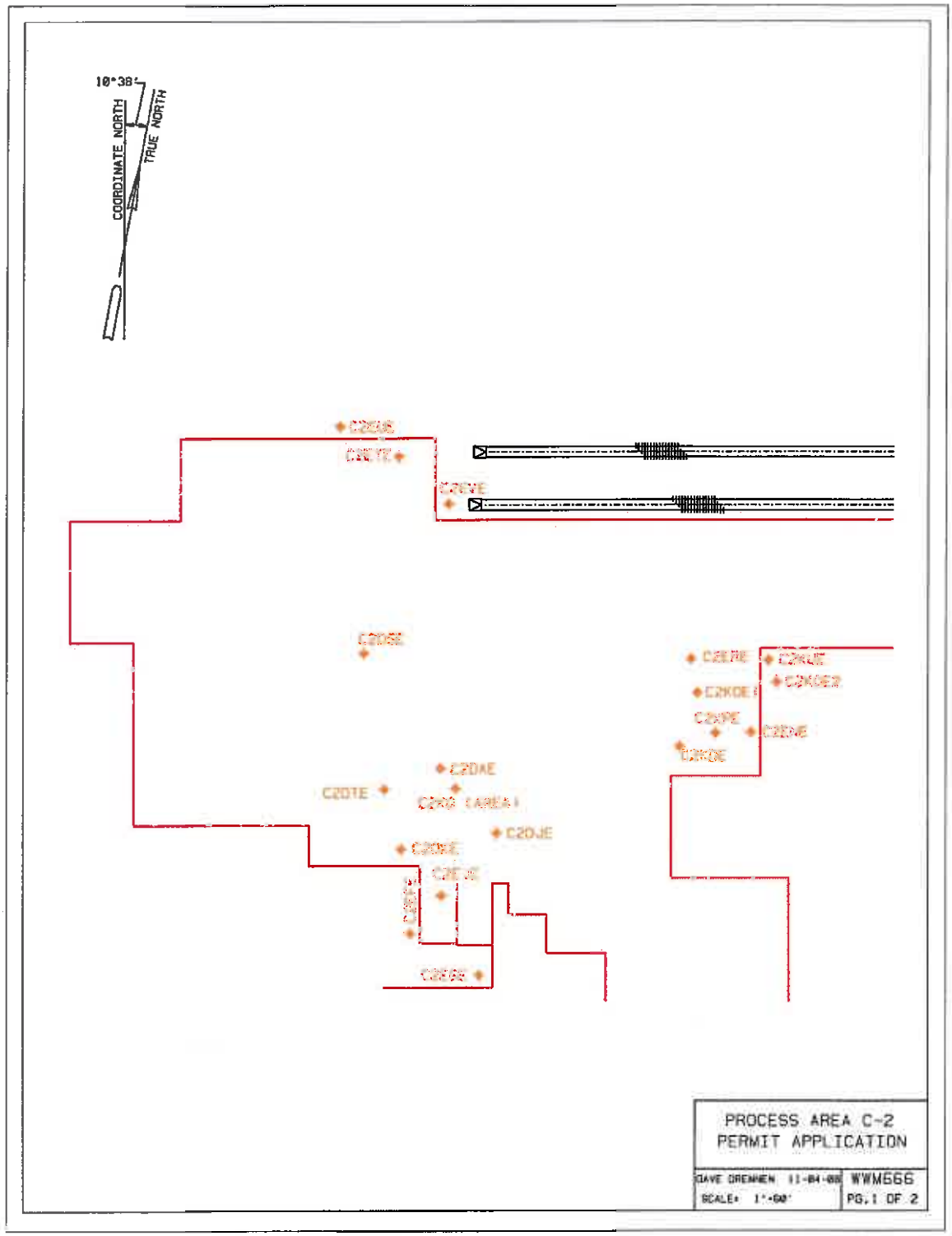
10°38'
COORDINATE NORTH
TRUE NORTH
C2DJE
C2DAE
C2DIE
C2KDE
C2DJE
PROCESS AREA C-2
PERMIT APPLICATION
DAVE DRENNEN 11-04-08
WWM666
SCALE: 1"=60'
PG.1 OF 2

Attachment F

Detailed Process Flow Diagrams

Teflon® C2 Area Polymerization PFD – 1953I Configuration

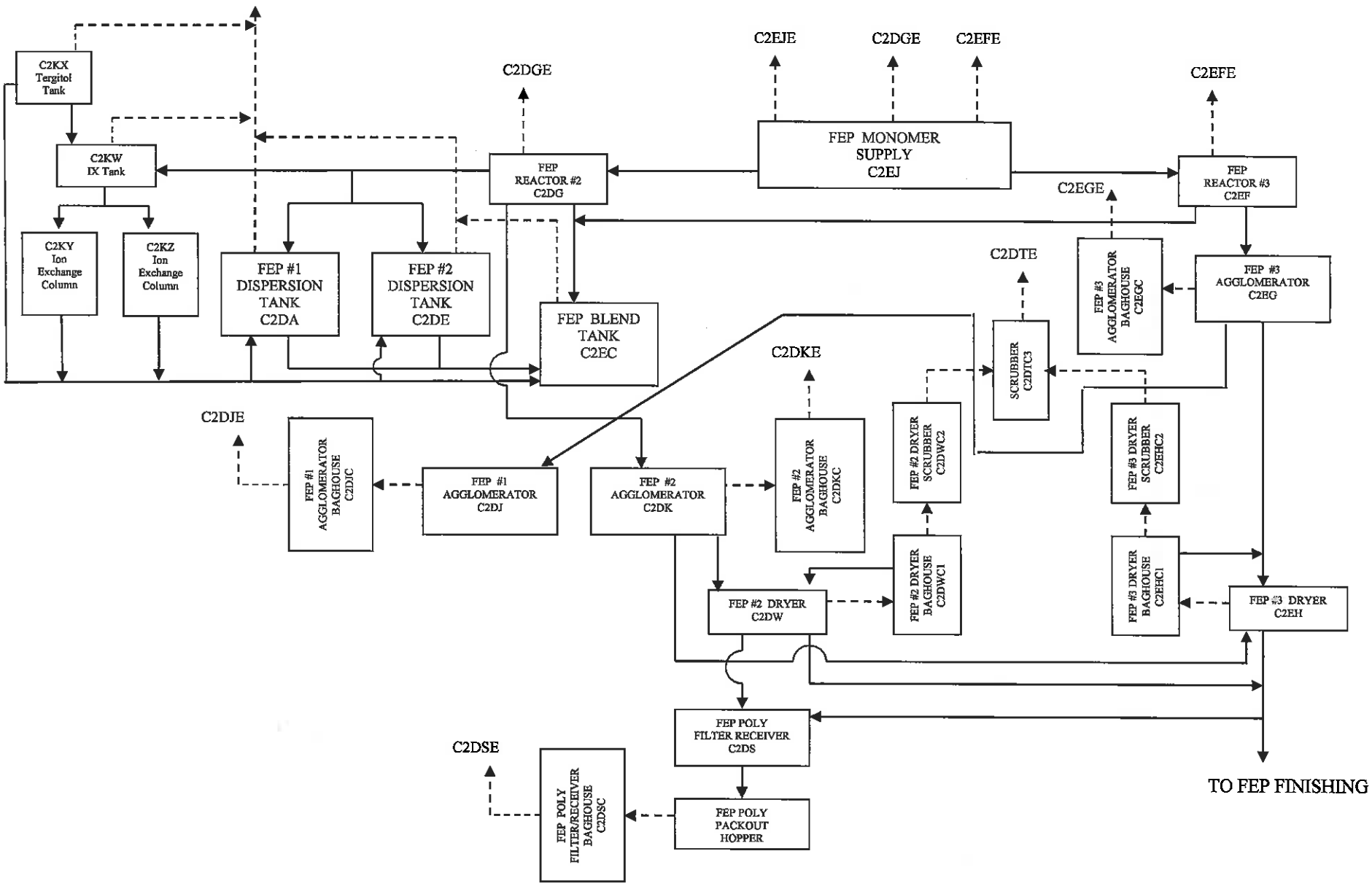

Teflon® C2 Area Finishing PFD – 1953I

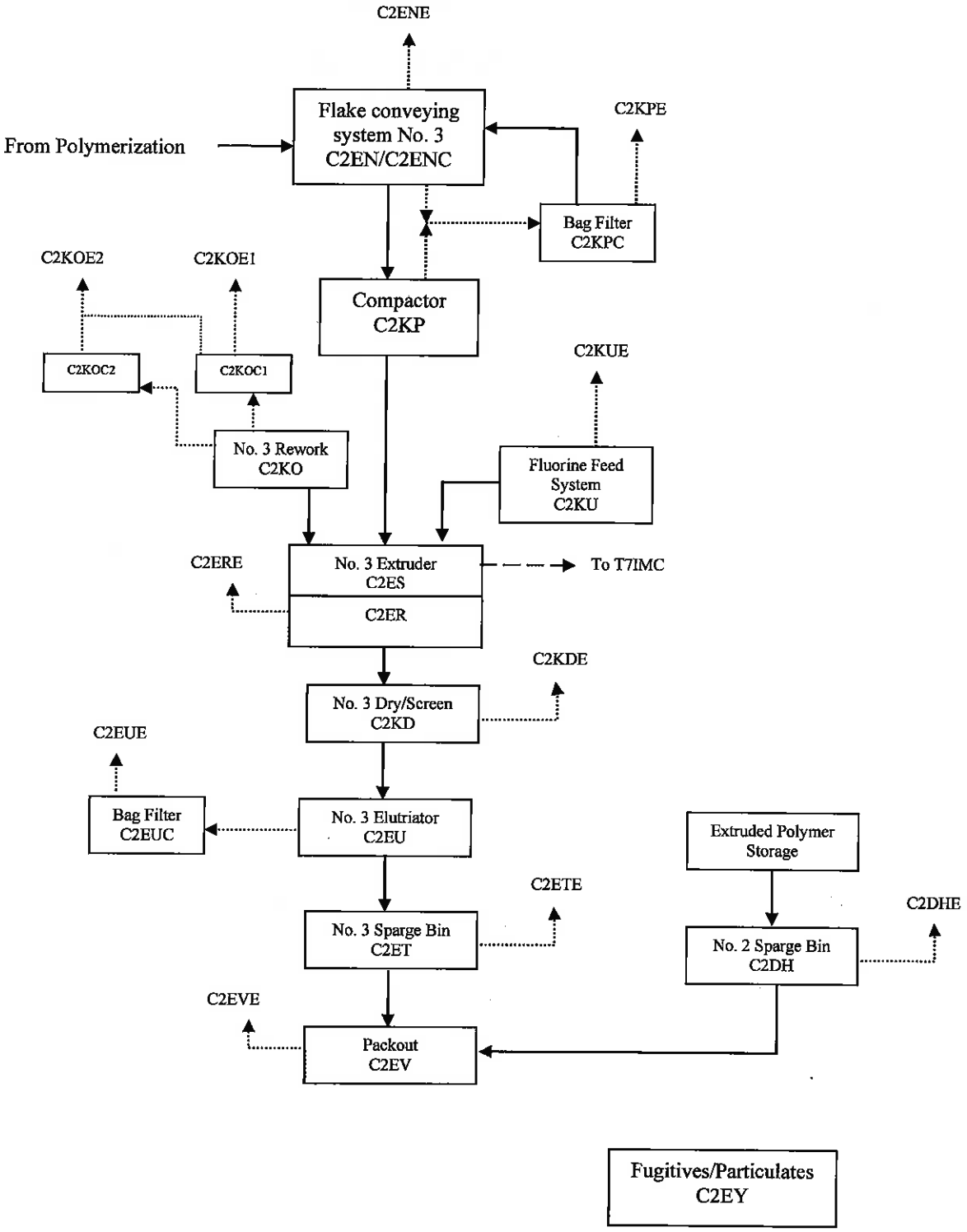

Attachment G

Process Description

C2 Area Manufacturing

The C2 Area manufactures fluoropolymer resins by pre-charging fluoromonomers into reactors along with demineralized water. Aqueous solutions of catalyst salts are then pumped into the reactors to initiate polymerization. Additional fluoromonomers are fed into the reactors as the reaction proceeds. Unreacted fluoromonomers are vented to recycling facilities at the end of the reaction. The remaining fluoropolymer and water slurry is pumped to agglomerators that mechanically separate the fluoropolymer from the water. Alternatively, the reactor output may be sent to facilities which concentrate the dispersion to higher solids and package the dispersion for sale. From the agglomerators, the polymer is conveyed to devices where water and other low boiling compounds are removed prior to extrusion. The polymer is then converted to pellets via an extrusion process. The pellets are hot air sparged to remove additional traces of miscellaneous volatile fluorocarbons, elutriated to remove traces of polymer fines and packaged for distribution.

Attachment S

Title V Permit Revision Information

Attachment S
Title V Permit Revision Information

1. New Applicable Requirements Summary	
Mark all applicable requirements associated with the changes involved with this permit revision.	
☐ SIP	☐ FIP
☒ Minor source NSR (45CSR13)	☐ PSD (45CSR14)
☐ NESHAP (45CSR15)	☐ Nonattainment NSR (45CSR19)
☐ Section 111 NSPS (Subpart _____)	☐ Section 112(d) MACT standards
☐ Section 112(g) Case-by-case MACT	☐ 112(r) RMP
☐ Section 112(i) Early reduction of HAP	☐ Consumer/commercial prod. reqts., section 183(e)
☐ Section 129 Standards/Reqts.	☐ Stratospheric ozone (Title VI)
☐ Tank vessel reqt., section 183(f)	☐ Emissions cap 45CSR§30-2.6.1
☐ NAAQS, increments or visibility (temp. sources)	☐ 45CSR27 State enforceable only rule
☐ 45CSR4 State enforceable only rule	☐ Acid Rain (Title IV, 45CSR33)
☐ Emissions Trading and Banking (45CSR28)	☐☐ Compliance Assurance Monitoring (40CFR64)[1]
☐ NO_x Budget Trading Program Non-EGUs (45CSR1)	☐ NO_x Budget Trading Program EGUs (45CSR26)
[1] If this box is checked, please include **Compliance Assurance Monitoring (CAM) Form(s)*** for each Pollutants Specific Emission Unit (PSEU).	

2. Non Applicability Determinations
List all requirements, which the source has determined to be not applicable to this permit revision and for which a permit shield is requested. The listing shall also include the rule citation and the rationale for the determination. The proposed changes do not trigger any new applicable requirements nor do they invalidate any previous non-applicability determinations.
Permit Shield ☐ Permit Shield is Requested *(not applicable to Minor Modifications)*

3. Change in Potential Emissions

Pollutant	Change in Potential Emissions (+ or -), lb/hr	Change in Potential Emissions (+ or -), TPY
APFO	**-0.452**	**-0.983**

4. List other Active NSR Permits / Permit Determinations / Consent Orders associated with this permit revision (if any):

NSR Permit and/or Consent Order Number	Date of Issuance	NSR Permit / Consent Order Condition Number
R30-10700182-2010	12/8/2014	See attached table below.
R13-3223	12/8/2014	4.1.21. of R13-1953H

5. Inactive Permits / Obsolete Permit or Obsolete Consent Order(s) Conditions Associated With This Permit Revision

NSR Permit and/or Consent Order Number	Date of Issuance	NSR Permit / Consent Order Condition Number

6. Suggested Title V Draft Permit Language

Are there any changes involved with this Title V Permit revision outside of the scope of the NSR Permit revision? ☒ Yes ☐ No

If Yes, describe the changes below. Also, please provide suggested Title V Draft Permit language for these changes (including all applicable requirements and any monitoring /recordkeeping/ reporting requirements associated with the changes), or attach a marked up pages of current Title V Permit. Please include appropriate citations for those requirements being added / revised.

The permittee shall not buy, manufacture or use APFO at the Chemours Washington Works.

R30-10700182	Section 3.1.12	Remove entire requirement and replace with "Reserved".
R30-10700182	Section 3.1.13	Remove entire requirement and replace with "Reserved".
R30-10700182	Section 3.2.1	Remove entire requirement and replace with "Reserved".
R30-10700182	Table 5.1.5	Remove entire requirement and replace with amended requirement 4.1.5 – "Permittee shall not purchase, manufacture or use APFO in the permitted facility."
R30-10700182	5.2.2.	Remove the reference to APFO found in footnote #1 of Table 5.2.1
R30-10700182	Appendix B – Attachment B	Remove Column from Attachment B Table for APFO – for both the pph and pounds/month as well as the heading in the table.
R30-10700182	Appendix B, Attachments C	Remove the APFO annual emissions from Table in Appendix B – Attachment C

7. Certification For Use Of Minor Modification Procedures *(for Minor Modifications only)*

Note:	*This certification must be signed by a responsible official. Minor Modification applications without a signed certification will be returned as incomplete. The criteria for allowing the use of Minor Modification Procedures are as follows:*

i. Proposed changes do not violate any applicable requirement;

ii. Proposed changes do not involve significant changes to existing monitoring, reporting, or recordkeeping requirements in the permit;

iii. Proposed changes do not require or change a case-by-case determination of an emission limitation or other standard, or a source-specific determination for temporary sources of ambient air quality impacts, or a visibility increment analysis;

iv. Proposed changes do not seek to establish or change a permit term or condition for which there is no underlying applicable requirement and which permit or condition has been used to avoid an applicable requirement to which the source would otherwise be subject (synthetic minor). Such terms and conditions include, but are not limited to a federally enforceable emissions cap used to avoid classification as a modification under any provision of Title I or any alternative emissions limit approved pursuant to regulations promulgated under § 112(j)(5) of the Clean Air Act;

v. Proposed changes do not involve preconstruction review under Title I of the Clean Air Act or 45CSR14 and 45CSR19;

vi. Proposed changes are not required under any rule of the Director to be processed as a significant modification;

Notwithstanding subparagraph 6.5.a.1.A. of 45CSR30 (items i through vi above), minor permit modification procedures may be used for permit modifications involving the use of economic incentives, marketable permits, emissions trading, and other similar approaches, to the extent that such minor permit modification procedures are explicitly provided for in rules of the Director which are approved by the U.S. EPA as a part of the State Implementation Plan under the Clean Air Act, or which may be otherwise provided for in the Title V operating permit issued under this rule.

Pursuant to Section 6.5.a.2.C of 45CSR30, the proposed modification contained herein meets the criteria for use of Minor permit modification procedures as set forth in Section 6.5.a.1. The use of Minor permit modification procedures are hereby requested for processing of this application.

(Signed):	*(Please use blue ink)*	Date:	Aug / 20 / 2015 *(Please use blue ink)*
Named (typed):	Robert J. Fehrenbacher	Title:	Plant Manager

NOTE: ***(1) For Administrative Amendments, the ability to operate with the changes described in this permit application is granted upon submittal of the application.***

(2) For Minor Modifications, the ability to operate with the changes described in this permit application is granted after seven (7) days from the submittal of the application, or upon issuance of the NSR permit, whichever is later.

(3) For Significant Modifications, the ability to operate is granted upon issuance of the modified Title V permit.

** All of the required forms and additional information can be found and downloaded from DAQ's Permitting Section site* **www.wvdep.org/daq,** *requested by phone (304) 926-0475, and/or obtained through the mail.*