Mead & Hunt, Inc.
M & H Architecture, Inc
400 Tracy Way, Suite 200
Charleston, West Virginia 25311
304-345-6712
meadhunt.com

RECEIVED
OCT 12 2017
WV DEP / DIV OF AIR QUALITY

10 October 2017

Assistant Director for Permitting
WVDEP – DAQ
601 57th Street, SE
Charleston, WV 25304

Re: Permit Determination Form –Generators at 12 tower sites
Shentel - Various Telecommunication Tower sites
Project Number: R4461000-171903.01

Dear Assistant Director:

Shentel is submitting twelve Permit Determination Form applications for its proposed installation and operation of emergency generators at the tower locations on **Table 1.** The tower sites will have a diesel generator enclosed in a shelter or on an exterior platform/concrete pad. The generators will be utilized for reserve power during peak capacity and during power outages. It is anticipated that the generators' actual use will be between 52 and 2,000 hours per year depending upon weather conditions and power grid stability. The PTE emissions have been calculated using 8,760 hours/year, which would be only under catastrophic conditions.

Sites 67157, 67186, 67289, 68004, 68055, 68145, 68186, 68486, 68573, 68296 will utilize the Cummings generator set. Site 67182 will have a Kohler generator set; while site 69141 will have a Generac generator set.

One original of the twelve Permit Determination Forms and 2 CDs are enclosed. If you have questions, please contact me at 681-313-4617. Thank you for your attention in this matter.

Very truly yours,

Teresa A. Schuller

Teresa A. Schuller
Sr. Environmental Project Manager

Attachment Table 1 – Tower locations
Enclosures: one original of each Permit Determination Form
2 CDs of the electronic versions

TABLE 1 - SHENTEL NEW GENERATOR SITES

ID	Site Name	City	County	State
68145	Wesleyan	Buckhannon	Upshur	WV
67289	Kerens	Kerens	Randolph	WV
67157	Alum Creek	Alum Creek	Lincoln	WV
68182	Laurel Fork	Buckhannon	Upshur	WV
68468	Monongah #1	Fairmont	Marion	WV
68055	Oak Hill	Oak Hill	Fayette	WV
68004	Prosperity	Prosperity	Raleigh	WV
68692	Pisgah	Bruceton Mills	Preston	WV
68186	Crystal Springs	Elkins	Randolph	WV
67186	Heath Creek	Barboursville	Cabell	WV
68573	Valley	Huntington	Wayne	WV
69141	Peterstown	Peterstown	Monroe	WV

Cummings generators

Kohler generator

Generac generator

WEST VIRGINIA
DEPARTMENT OF ENVIRONMENTAL PROTECTION
DIVISION OF AIR QUALITY
601 57th Street, SE
Charleston, WV 25304
Phone: (304) 926-0475
www.dep.wv.gov/daq

PERMIT DETERMINATION FORM (PDF)

FOR AGENCY USE ONLY: PLANT I.D. # _____

PDF # _____ PERMIT WRITER: _____

1. NAME OF APPLICANT (AS REGISTERED WITH THE WV SECRETARY OF STATE'S OFFICE):
SHENTEL

2. NAME OF FACILITY (IF DIFFERENT FROM ABOVE):
68004 Prosperity Tower

3. NORTH AMERICAN INDUSTRY CLASSIFICATION SYSTEM (**NAICS**) CODE:
517312

4A. MAILING ADDRESS: 500 Summers St.
Charleston, WV 25301

4B. PHYSICAL ADDRESS: 553 Ogden St.
Prosperity, WV 25909

5A. DIRECTIONS TO FACILITY (PLEASE PROVIDE **MAP** AS **ATTACHMENT A**): From Charleston, take WV turnpike south to exit 48. Turn right onto US 19S/Robert C. Byrd Dr and follow for 0.6 miles to a right onto Prosperity Rd. Turn right onto Ogden St. and tower will be ahead on the right.

5B. NEAREST ROAD:	5C. NEAREST CITY OR TOWN:	5D. COUNTY:
Ogden Street	Prosperity	Raleigh
5E. UTM NORTHING (KM):	**5F. UTM EASTING (KM):**	**5G. UTM ZONE:**
4188429	482134	17S

6A. INDIVIDUAL TO CONTACT IF MORE INFORMATION IS REQUIRED: Chris Harris

6B. TITLE: WV Manager

6C. TELEPHONE:	6D. FAX:	6E. E-MAIL:
304-353-8917	304-353-8938	Christopher.Harris@emp.shentel.com

7A. DAQ PLANT I.D. NO. (FOR AN EXISTING FACILITY ONLY):
___ ___ ___ – ___ ___ ___ ___ ___

7B. PLEASE LIST ALL CURRENT 45CSR13, 45CSR14, 45CSR19 AND/OR TITLE V (45CSR30) PERMIT NUMBERS ASSOCIATED WITH **THIS** PROCESS (FOR AN EXISTING FACILITY ONLY):

7C. IS THIS PDF BEING SUBMITTED AS THE RESULT OF AN ENFORCEMENT ACTION? IF YES, PLEASE LIST:
NO

8A. TYPE OF EMISSION SOURCE (CHECK ONE):
☒ **NEW SOURCE** ☐ **ADMINISTRATIVE UPDATE**
☐ **MODIFICATION** ☐ **OTHER** (PLEASE EXPLAIN IN 11B)

8B. IF ADMINISTRATIVE UPDATE, DOES DAQ HAVE THE APPLICANT'S CONSENT TO UPDATE THE EXISTING PERMIT WITH THE INFORMATION CONTAINED HEREIN?
☐ **YES** ☐ **NO**

9. IS ***DEMOLITION*** OR PHYSICAL ***RENOVATION*** AT AN EXISTING FACILITY INVOLVED? ☐ **YES** ☒ **NO**

10A. DATE OF ANTICIPATED INSTALLATION OR CHANGE: 10/1/2017

10B. DATE OF ANTICIPATED START-UP: 10/15/2017

11A. PLEASE PROVIDE A **DETAILED PROCESS FLOW DIAGRAM** SHOWING EACH PROPOSED OR MODIFIED PROCESS EMISSION POINT AS **ATTACHMENT B**.

11B. PLEASE PROVIDE A **DETAILED PROCESS DESCRIPTION** AS **ATTACHMENT C**.

12. PLEASE PROVIDE **MATERIAL SAFETY DATA SHEETS (MSDS)** FOR ALL MATERIALS PROCESSED, USED OR PRODUCED AS **ATTACHMENT D**. FOR CHEMICAL PROCESSE, PLEASE PROVIDE A MSDS FOR EACH COMPOUND EMITTED TO AIR.

13A. **REGULATED AIR POLLUTANT EMISSIONS:**

⇒ **FOR A NEW FACILITY,** PLEASE PROVIDE PLANT WIDE EMISSIONS BASED ON THE POTENTIAL TO EMIT (PTE) FOR THE FOLLOWING AIR POLLUTANTS INCLUDING ALL PROCESSES.

⇒ **FOR AN EXISTING FACILITY,** PLEASE PROVIDE THE PROPOSED CHANGE IN EMISSIONS BASED ON THE PTE OF ALL PROCESS CHANGES FOR THE FOLLOWING AIR POLLUTANTS.

PTE FOR A GIVEN POLLUTANT IS TYPICALLY BEFORE AIR POLLUTION CONTROL DEVICES AND IS COLLECTED BASED ON THE MAXIMUM DESIGN CAPACITY OF PROCESS EQUIPMENT.

POLLUTANT	**HOURLY PTE** (LB/HR)	**YEARLY PTE** (TON/YR) (HOURLY PTE MULTIPLIED BY 8760 HR/YR) DIVIDED BY 2000 LB/TON
PM	0.01	0.03
PM_{10}	0.007	0.02
VOCs	0.06	0.26
CO	0.13	0.58
NO_x	0.2	0.9
SO_2	0.05	0.23
Pb	-	-
HAPs (AGGREGATE AMOUNT)	Formaldehyde 0.03	Formaldehyde 0.13
TAPs (INDIVIDUALLY)*	-	-
OTHER (INDIVIDUALLY)*	-	-

* ATTACH ADDITIONAL PAGES AS NEEDED

13B. PLEASE PROVIDE ALL **SUPPORTING CALCULATIONS** AS **ATTACHMENT E.**

CALCULATE AN HOURLY AND YEARLY PTE OF EACH PROCESS EMISSION POINT (SHOWN IN YOUR DETAILED PROCESS FLOW DIAGRAM) FOR ALL AIR POLLUTANTS LISTED ABOVE INCLUDING INDIVIDUAL HAP'S (LISTED IN SECTION 112[b] OF THE 1990 CAAA), TAP'S (LISTED IN 45CSR27), AND OTHER AIR POLLUTANTS (E.G. POLLUTANTS LISTED IN TABLE 45-13A OF 45CSR13, MINERAL ACIDS PER 45CSR7, ETC.).

14. **CERTIFICATION OF DATA**

I, KEVIN FOLK (*TYPE NAME*) ATTEST THAT ALL THE REPRESENTATIONS CONTAINED IN THIS APPLICATION, OR APPENDED HERETO, ARE TRUE, ACCURATE, AND COMPLETE TO THE BEST OF MY KNOWLEDGE BASED ON INFORMATION AND BELIEF AFTER REASONABLE INQUIRY, AND THAT I AM A ***RESPONSIBLE OFFICIAL**** (*PRESIDENT, VICE PRESIDENT, SECRETARY OR TREASURER, GENERAL PARTNER OR SOLE PROPRIETOR*) OF THE APPLICANT.

SIGNATURE OF RESPONSIBLE OFFICIAL: K. Folk

TITLE: VP WIRELESS NETWORK OPERATIONS DATE: 10 / 3 / 2017.

THE DEFINITION OF THE PHRASE '*RESPONSIBLE OFFICIAL***' CAN BE FOUND AT 45CSR13, SECTION 2.23.

NOTE: PLEASE CHECK ENCLOSED ATTACHMENTS:

☒ **ATTACHMENT A** ☒ **ATTACHMENT B** ☒ **ATTACHMENT C** ☒ **ATTACHMENT D** ☒ **ATTACHMENT E**

RECORDS ON ALL CHANGES ARE REQUIRED TO BE KEPT AND MAINTAINED ON-SITE FOR TWO (2) YEARS.

THE PERMIT DETERMINATION FORM WITH THE INSTRUCTIONS CAN BE FOUND ON DAQ'S PERMITTING SECTION WEB SITE:

www.dep.wv.gov/daq

Attachment A
Topo Map

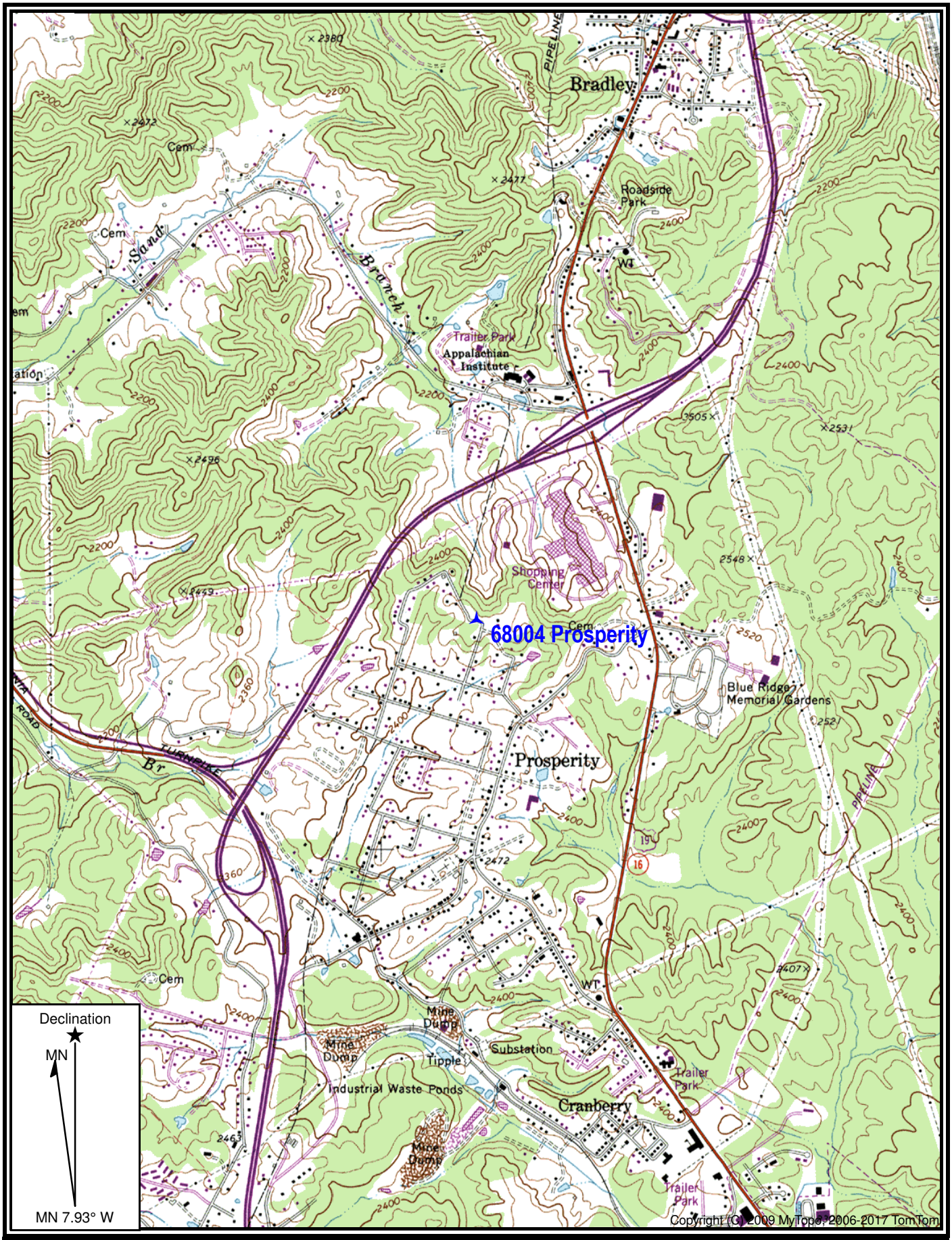

Map Name: BECKLEY	Scale: 1 inch = 2,000 ft.	Date Published: 1969
State Name: WV	Horizontal Datum: NAD83	
Print Date: 08/11/17	Date Photo Revised: 1989	

Attachment B
Process Flow Diagram

Mead & Hunt, Inc.

X:\4461000\171638.01\68004 Prosperity\171638.01 CL.dwg, 7/7/2017 11:16:45 AM, \\crw-inf-dc01\CRW_7845

SHENTEL®

Always connected to you

500 SUMMERS STREET
CHARLESTON, WV 25301

PROSPERITY
68004

INSTALLATION OF STAND-BY 20kW GENERATOR AT EXISTING CO-LOCATION SITE

AREA MAP

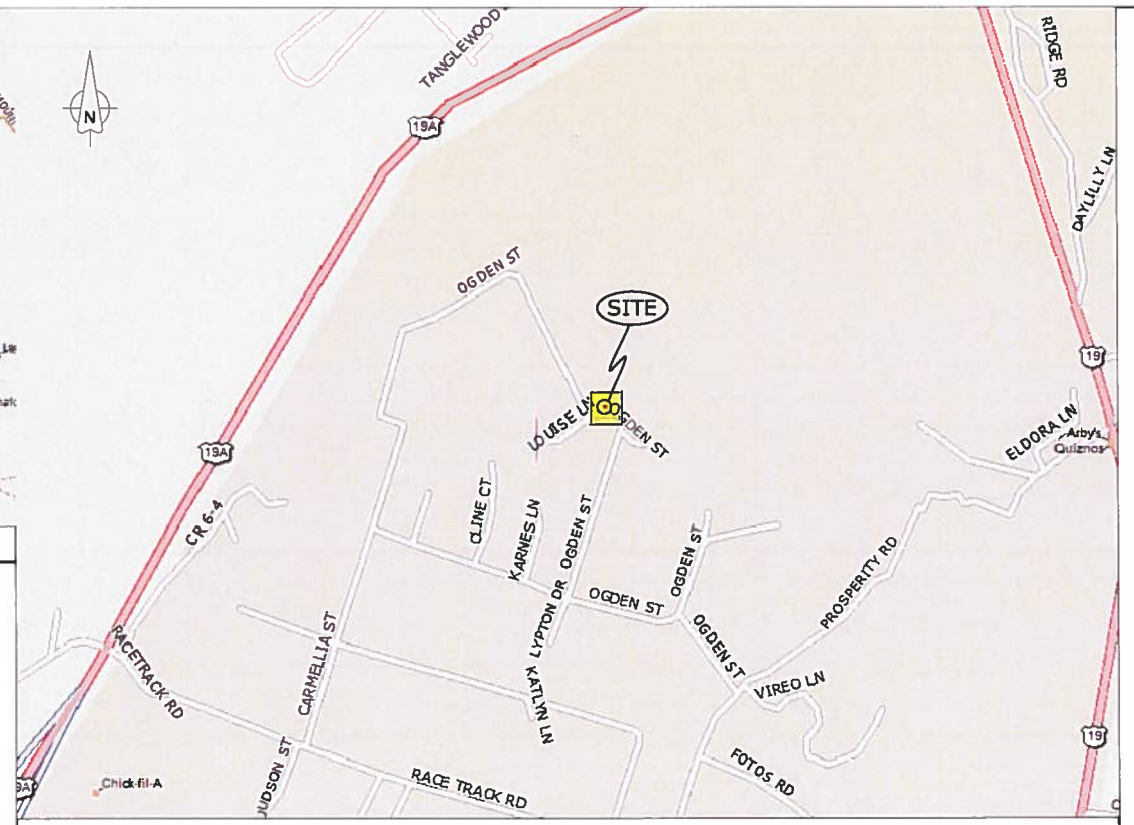

VICINITY MAP

SITE DIRECTIONS

CHARLESTON, WV: MERGE ONTO I-64 E/I-77 S PARTIAL TOLL ROAD (52.5 MI). TAKE EXIT 48 TOWARD US-19/N BECKLEY/SUMMERSVILLE (1.7 MI). USE THE RIGHT LANE TO TAKE THE U.S. 19 S/W VIRGINIA 16 RAMP TO BRADLEY/N BECKLEY (0.3 MI). TURN RIGHT ONTO US-19 S/ROBERT C BYRD DR (0.6 MI). TURN RIGHT ONTO PROSPERITY RD (0.5 MI). TURN RIGHT ONTO OGDEN ST (0.2 MI). TURN RIGHT TO STAY ON OGDEN ST(N37° 50' 25.79" W81° 12' 13.21") AND DESTINATION WILL BE ON THE RIGHT (0.2 MI)(N37° 50' 35.03" W81° 12' 10.51").

DIRECTIONS TO SITE

DESIGN ENGINEER

Mead & Hunt
400 TRACY WAY, SUITE 200
CHARLESTON, WV 25311
(304) 345-6712 PHONE
(304) 345-6714 FAX

CONSULTANT TEAM

SITE NAME
PROSPERITY

BU NUMBER
801914

SHENTEL SITE NUMBER
68004

SITE ADDRESS
553 OGDEN STREET
PROSPERITY, WV 25909

TOWER OWNER
CROWN CASTLE
2000 CORPORATE DRIVE
CANONSBURG, PA 15317

SITE DATA
NAD 83 LATITUDE – N37° 50' 35.24"
NAD 83 LONGITUDE – W81° 12' 11.01"
ELEVATION – 2,452±'

LEASE AREA
240 SQ. FT.

PROJECT DESCRIPTION
INSTALLATION OF STAND-BY 20kW GENERATOR AT EXISTING CO-LOCATION SITE.

JURISDICTION
RALEIGH COUNTY

CONTACTS
SHENTEL (CONSTRUCTION)
SCOTT GILLIAM
(304) 395-1394 – MOBILE
(304) 414-2439 – OFFICE
(304) 414-5388 – FAX

SHENTEL (LEASING)
CHRIS HARRIS
(304) 353-8917 – PHONE
(304) 353-8938 – FAX

MEAD & HUNT
CURTIS PAXTON
(304) 553-8103 – PHONE
400 TRACY WAY, SUITE 200
CHARLESTON, WV 25311

PROJECT INFORMATION

SHEET	T-1	TITLE SHEET
SHEET	C-1	EXISTING SITE PLAN
SHEET	C-2	PROPOSED PLAN
SHEET	C-3	GROUNDING PLAN
SHEET	D-1	MISCELLANEOUS DETAILS

SHEET INDEX

POLICE/FIRE/RESCUE
911

ELECTRIC POWER
ALLEGHENY POWER
CONTACT: CUSTOMER SERVICE
PHONE#: 800-255-3443

TELEPHONE
FRONTIER
CONTACT: CUSTOMER SERVICE
PHONE#: 877-352-7011

SHENTEL NOC
(800) 566-9568 – PHONE

EMERGENCY AND UTILITY CONTACTS

SHENTEL®
Always connected to you
500 SUMMERS STREET
CHARLESTON, WV 25301

SITE NAME:	PROSPERITY
CROWN BU NUMBER:	801914
SHENTEL SITE NUMBER:	68004
SITE ADDRESS:	553 OGDEN STREET PROSPERITY, WV 25909
AREA:	LEASE AREA = 240 SQ. FT.
TOWER OWNER:	CROWN CASTLE 2000 CORPORATE DRIVE CANONSBURG, PA 15317
COUNTY:	RALEIGH
LATITUDE:	N37° 50' 35.24"
LONGITUDE:	W81° 12' 11.01"

NO.	REVISION/ISSUE	DATE
1	ISSUE FOR COMMENT	07/07/17

Mead & Hunt
400 TRACY WAY, SUITE 200
CHARLESTON, WV 25311
(304) 345-6712 PHONE
(304) 345-6714 FAX

PROJECT # R4461000-171638.01

TITLE SHEET

SHEET T-1

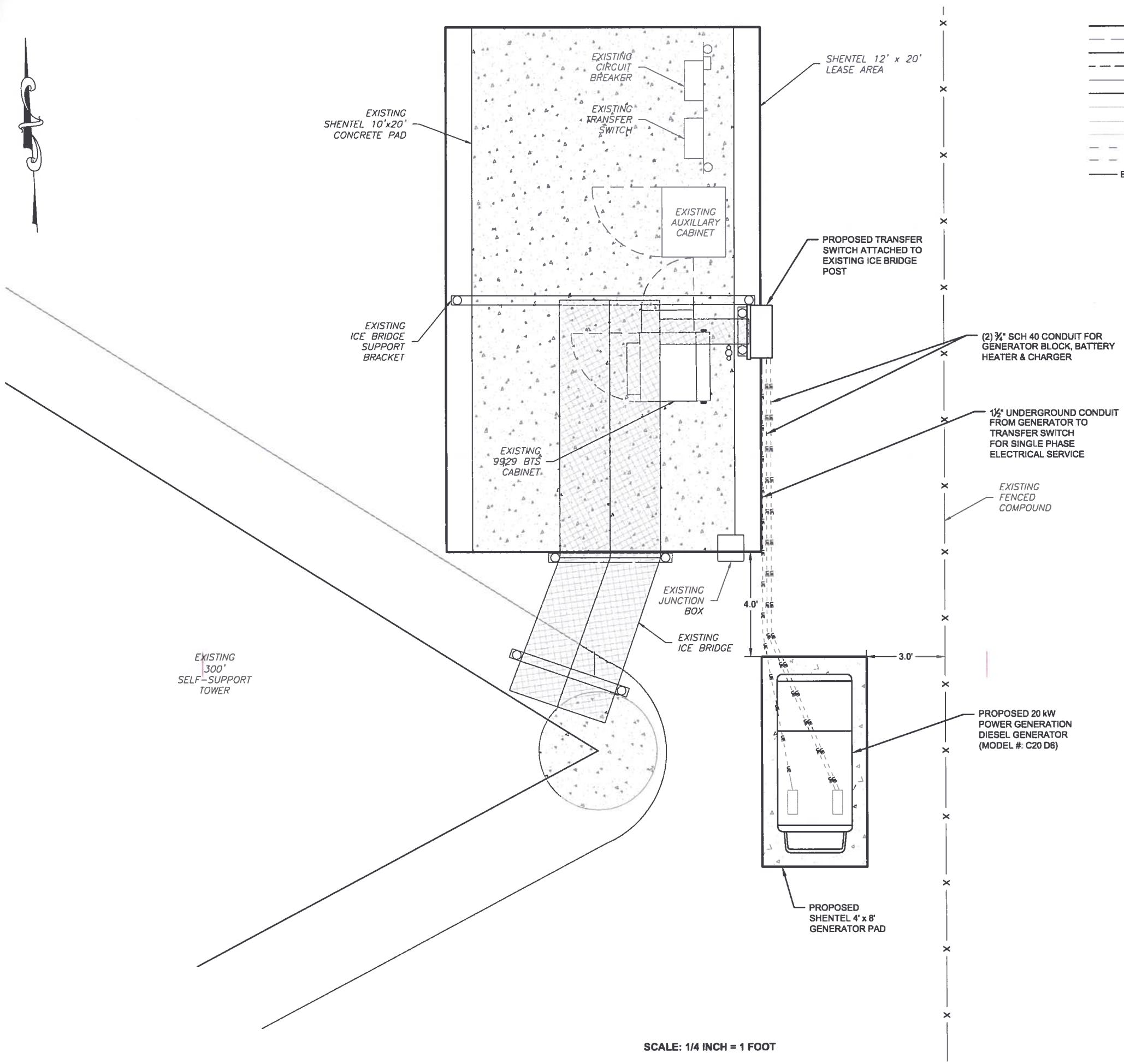

SCALE: 1/4 INCH = 1 FOOT

LEGEND

- PROPERTY LINE
- TRACT LINE
- LEASE LINE
- ROW LINE
- EXISTING FENCE LINE
- EXISTING FENCE LINE
- GAS LINE
- OVERHEAD POWER
- OVERHEAD TELEPHONE
- UNDERGROUND POWER
- UNDERGROUND TELCO.
- OVERHEAD POWER/TELEPHONE
- EXISTING UTILITY POLE
- EXISTING UTILITY POLE

811 Know what's below. Call before you dig.

SHENTEL
Always connected to you

500 SUMMERS STREET
CHARLESTON, WV 25301

SITE NAME:	PROSPERITY
CROWN BU NUMBER:	801914
SHENTEL SITE NUMBER:	68004
SITE ADDRESS:	553 OGDEN STREET PROSPERITY, WV 25909
AREA:	LEASE AREA = 240 SQ. FT.
TOWER OWNER:	CROWN CASTLE 2000 CORPORATE DRIVE CANONSBURG, PA 15317
COUNTY:	RALEIGH
LATITUDE:	N37° 50' 35.24"
LONGITUDE:	W81° 12' 11.01"

NO.	REVISION/ISSUE	DATE
1	ISSUE FOR COMMENT	07/07/17

Mead & Hunt

400 TRACY WAY, SUITE 200
CHARLESTON, WV 25311
(304) 345-6712 PHONE
(304) 345-6714 FAX

PROJECT # R4461000-171638.01

EXISTING PLAN

SHEET C-2

X:\4461000\171638.01\68004 Prosperity\171638.01 CL.dwg, 7/7/2017 11:16:47 AM, \\crw-inf-dc01\CRW_7845

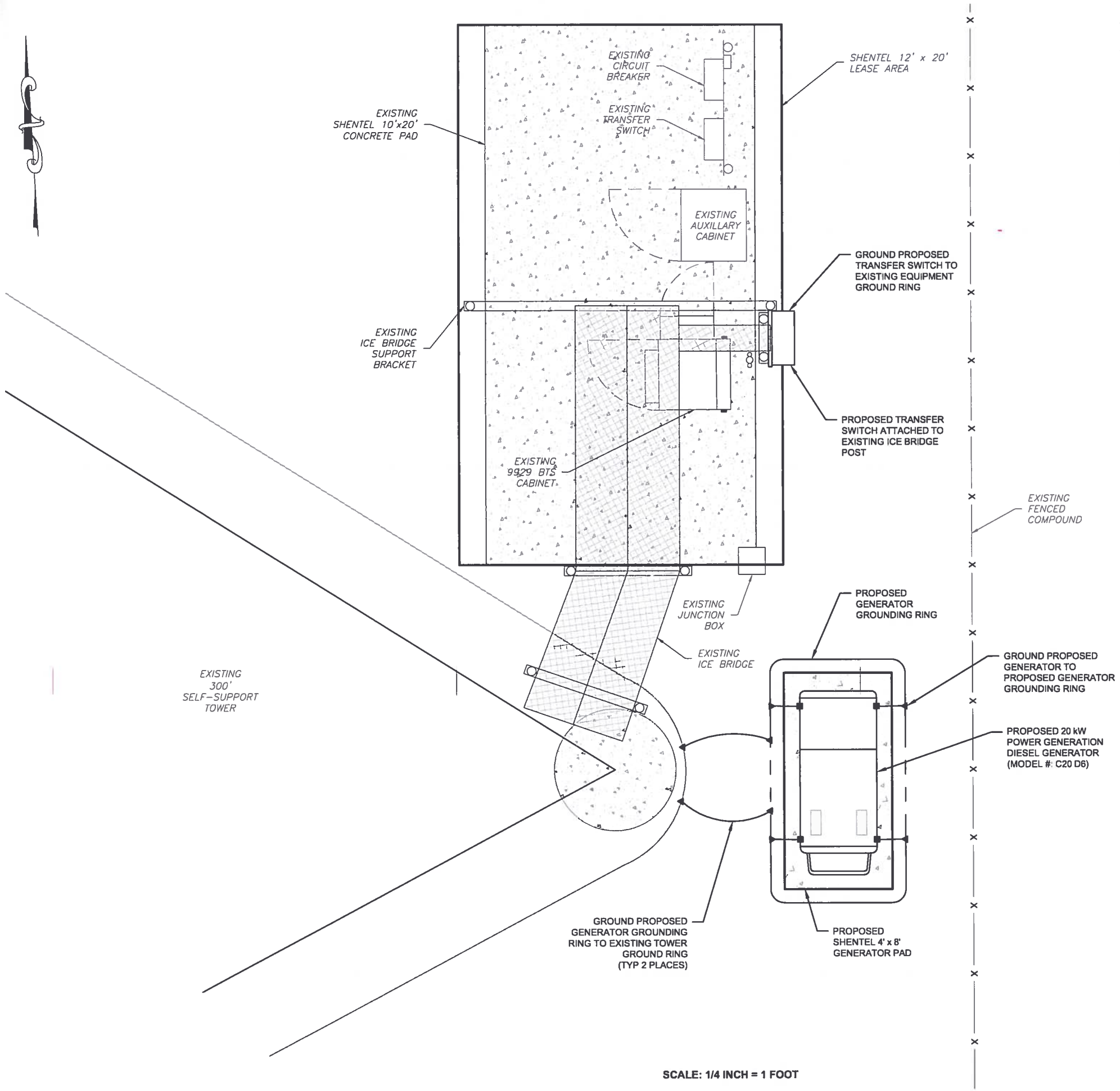

SCALE: 1/4 INCH = 1 FOOT

LEGEND

- PROPERTY LINE
- TRACT LINE
- LEASE LINE
- ROW LINE
- EXISTING FENCE LINE
- EXISTING FENCE LINE
- GAS LINE
- OVERHEAD POWER
- OVERHEAD TELEPHONE
- UNDERGROUND POWER
- UNDERGROUND TELCO.
- OVERHEAD POWER/TELEPHONE
- EXISTING UTILITY POLE
- PROPOSED UTILITY POLE

811 Know what's below. Call before you dig.

SHENTEL
Always connected to you

500 SUMMERS STREET
CHARLESTON, WV 25301

SITE NAME:	PROSPERITY
CROWN BU NUMBER:	801914
SHENTEL SITE NUMBER:	68004
SITE ADDRESS:	553 OGDEN STREET PROSPERITY, WV 25909
AREA:	LEASE AREA = 240 SQ. FT.
TOWER OWNER:	CROWN CASTLE 2000 CORPORATE DRIVE CANONSBURG, PA 15317
COUNTY:	RALEIGH
LATITUDE:	N37° 50' 35.24"
LONGITUDE:	W81° 12' 11.01"

NO.	REVISION/ISSUE	DATE
1	ISSUE FOR COMMENT	07/07/17

Mead & Hunt

400 TRACY WAY, SUITE 200
CHARLESTON, WV 25311
(304) 345-6712 PHONE
(304) 345-6714 FAX

PROJECT # R4461000-171638.01

GROUNDING PLAN

SHEET C-3

X:\4461000\171638.01\68004 Prosperity\171638.01 CL.dwg, 7/7/2017 11:16:47 AM, \\crw-inf-dc01\crw_7845_Page 0 of 32

Attachment C
Process Description

PROCESS DESCRIPTION

The installation will be a Kubota V2203M, Tier 4i Diesel generator, Model C20 D6. This generator set meets the EPA's 2016 Tier 4i Exhaust Emission based upon the Compliance Statement attached. The generator will be used to supply power to the wireless communications facility in case of power failure. During normal operation, the generator may be exercised weekly for approximately one hour for an annual run time of 52 hours. It is not expected that the generator will exceed 8,760 hours/year allowed by the State of West Virginia.

The generator/shelters installed on all properties have the following useful fuel safeguards:

- The generator room has a spill containment pan that is rated at 125% of the fuel stored in the diesel generator.

- The internal generator fuel tank is a U.L. 142 and NFPA 30 approved double wall sub-base fuel tank and meets Local, State, and Federal codes.

- The generators have remote alarms that are monitored 24 x 7. There is a fuel tank rupture sensor that reports back any spillage that occurs within the fuel containment pan. The network also monitors low-level fuel, generator on and operating in emergency mode.

- For remote generator installations (generators not installed in a shelter), the entire unit is housed in a "Crystal Quiet Enclosure" with an internally mounted silencer.

2016 EPA Tier 4i Exhaust Emission Compliance Statement
C20 D6
Stationary Emergency
60 Hz Diesel Generator Set

Compliance Information:

The engine used in this generator set complies with U.S. EPA New Source Performance Standards for Stationary Emergency engine under the provisions of 40 CFR Part 60 Subpart IIII when tested per ISO 8178 D2.

Engine Manufacturer:	Kubota Corporation
EPA Certificate Number:	GKBXL02.2FCC-040
Effective Date:	10/22/2015
Date Issued:	10/22/2015
EPA Engine Family (Cummins Emissions Family):	GKBXL02.2FCC

Engine Information:

Model:	Kubota V2203M	Bore:	3.43 in. (87 mm)
Engine Nameplate HP:	36	Stroke:	3.64 in. (92 mm)
Type:	4 Cycle, In-line, 4 Cylinder Diesel	Displacement:	134.1 cu. In. (1.7 liters)
Aspiration:	Naturally aspirated	Compression Ratio:	22:1
Emission Control Device:		Exhaust Stack Diameter:	2 in.(51 mm)

Diesel Fuel Emission Limits

D2 Cycle Exhaust Emissions

	Grams per BHP-hr			Grams per kWm-hr		
	NOx + NMHC	CO	PM	NOx + NMHC	CO	PM
Cert Test Results - Diesel Fuel (300-4000 ppm Sulfur)	3.90	0.70	0.16	5.20	1.00	0.22
EPA Emissions Limit	5.60	4.10	0.22	7.50	5.50	0.30
Cert Test Results - CARB Diesel Fuel (<15 ppm Sulfur)	3.60	0.70	0.14	4.80	1.00	0.19
CARB Emissions Limit	5.60	4.10	0.22	7.50	5.50	0.30

Cert Test Results - The CARB emission values are based on CARB approved calculations for converting EPA (500 ppm) fuel to CARB (15 ppm) fuel.

Test Methods: EPA/CARB emissions recorded per 40CFR89 (ref. ISO8178-1) and weighted at load points prescribed in Subpart E, Appendix A for Constant Speed Engines (ref. ISO8178-4, D2)

Diesel Fuel Specifications: Cetane Number: 40-48. Reference: ASTM D975 No. 2-D.

Reference Conditions: Air Inlet Temperature: 25°C (77°F), Fuel Inlet Temperature: 40°C (104°F). Barometric Pressure: 100 kPa (29.53 in Hg), Humidity: 10.7 g/kg (75 grains H2O/lb) of dry air; required for NOx correction, Restrictions: Intake Restriction set to a maximum allowable limit for clean filter; Exhaust Back Pressure set to a maximum allowable limit.

Tests conducted using alternate test methods, instrumentation, fuel or reference conditions can yield different results.
Engine operation with excessive air intake or exhaust restriction beyond published maximum limits, or with improper maintenance, may result in elevated emission levels.

Creo Parametric

REL NO	LTR	NO	REVISION	DRN	CKD	APVD	DATE
ECO-138549	A	1	PRODUCTION_RELEASE	RAH	MMG	M.GRIFFITH	08AUG13

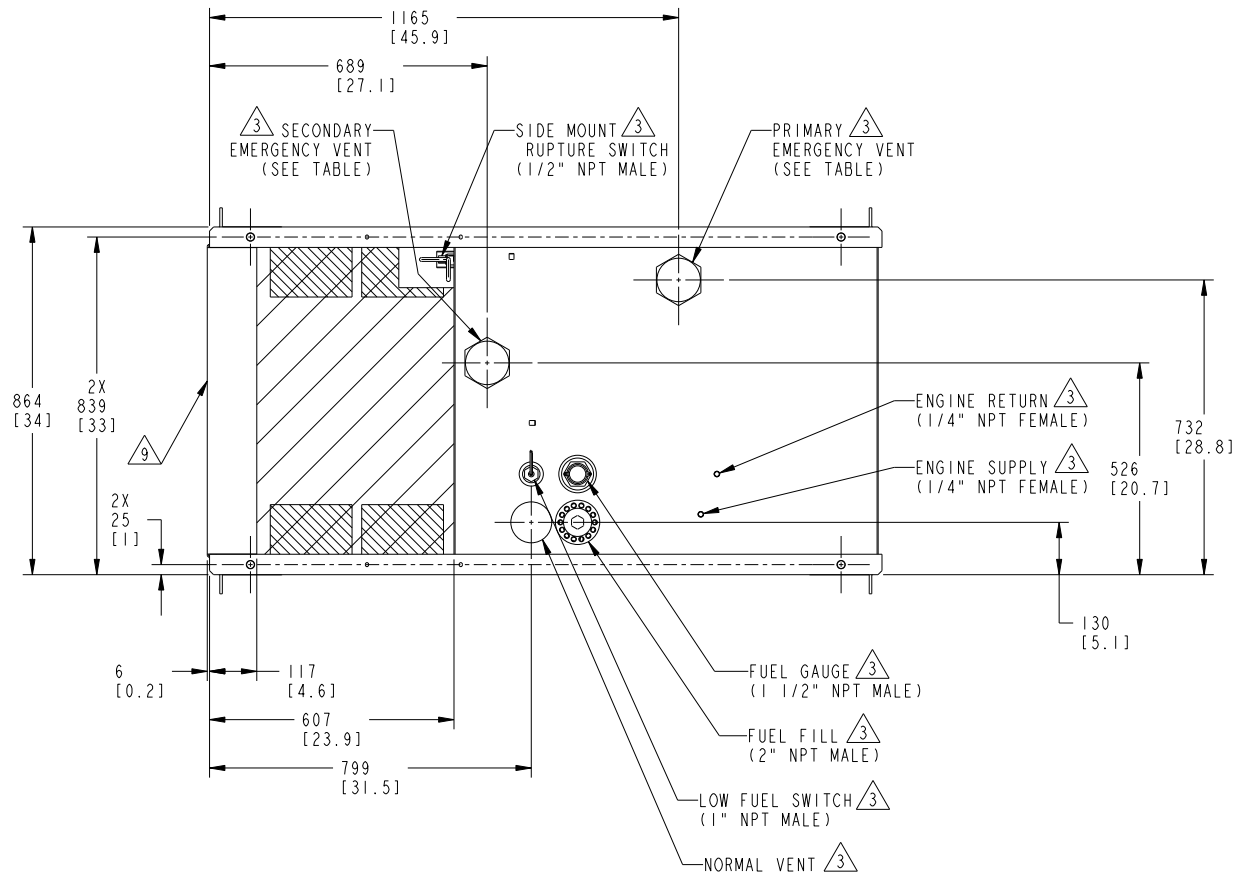

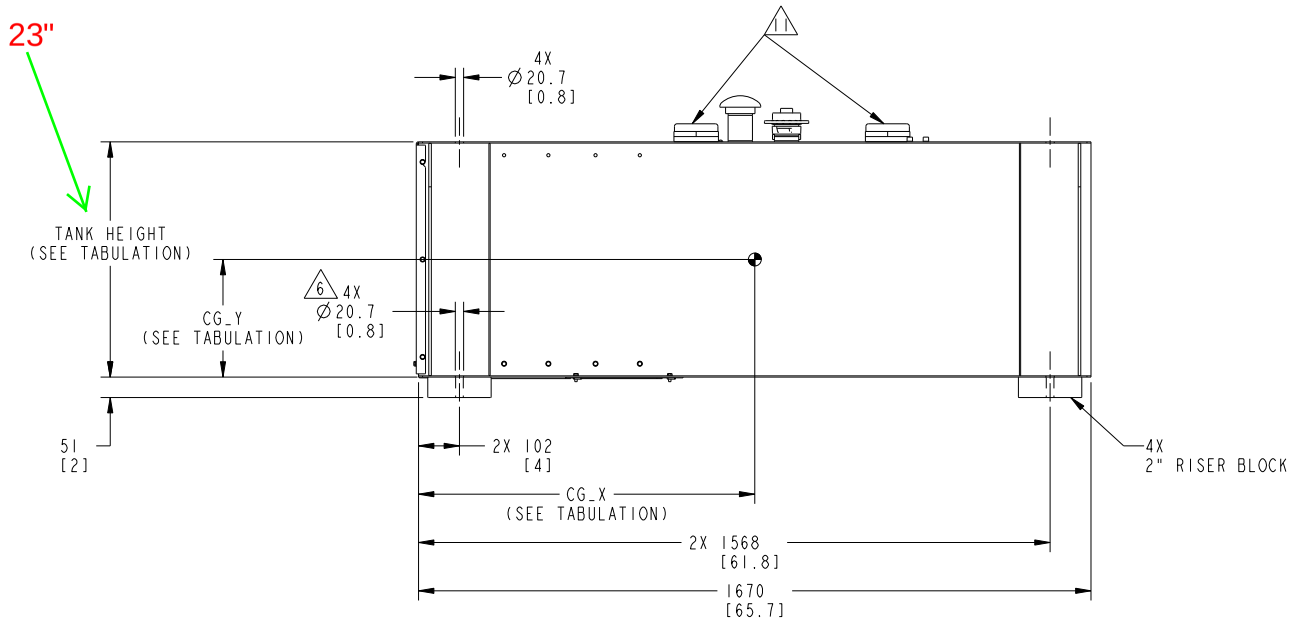

NOTES:

1. TANKS ARE UL142 LISTED. SECONDARY CONTAINMENT FUEL TANK. REFER TO TANK LABELS AND LOCAL CODE TO DETERMINE VENTING REQUIREMENTS FOR BOTH COMPARTMENTS.
2. SUBBASE FUEL TANK MOUNTING. EXCESSIVE TWISTING OF THE FUEL TANK MAY RESULT IN STRUCTURAL FAILURE OF THE TANK. TO ENSURE THE INSTALLATION DOES NOT EXCESSIVELY TWIST THE FUEL TANK, THE FOLLOWING PROCEDURE MUST BE OBSERVED:
   - 2.1 REFER TO APPLICATION MANUAL T030 FOR GENERAL SET MOUNTING GUIDELINES.
   - 2.2 AFTER PLACING SET ON FOUNDATION, VERIFY ALL FOUR MOUNTING PADS CONTACT FOUNDATION.
   - 2.3 THERE ARE SHIMS ATTACHED TO EACH FUEL TANK. THESE ARE INTENDED TO FILL ANY GAP BETWEEN THE MOUNTING PADS AND FOUNDATION.
   - 2.4 INSERT THE MAXIMUM HEIGHT STACK OF SHIMS THAT WILL SLIDE INTO THE GAP.
   - 2.5 TIGHTEN TANK HOLD DOWN MOUNTING FASTENERS.
3. INDICATES PIPE SIZE OF FEATURE OR OPTION INDICATED.
4. DIMENSIONS IN [ ] ARE IN INCHES.
5. FOR IBC SEISMIC CERTIFIED INSTALLATIONS, SEE GENSET IBC SEISMIC INSTALLATION REQUIREMENTS DRAWING.
6. FUEL TANK HAS A FLANGE THICKNESS OF UP TO 10 mm [0.394 in], ALLOW EXTRA LENGTH ON HARDWARE FOR UNEVENESS OF MOUNTING SURFACE. RISER FEATURE WILL ADD ADDITIONAL 51 mm [2 in].
7. FUEL TANK PERIMETER IS SHOWN. FOUNDATION SHOULD BE EXTENDED BEYOND THIS PERIMETER. SEE (T030) APPLICATION MANUAL - (SEE SHEET 3).
8. INSTALLATION & REMOVAL LIFTING AND SERVICE ACCESS CLEARANCE (SUGGESTED MINIMUM) - (SEE SHEET 3).
9. REMOVABLE STUB-UP ACCESS PANEL.
10. ELECTRICAL STUB-UP AREA WITH FUEL TANK RISER FEATURE INSTALLED - (SEE SHEET 3).
11. MAINTAIN MIN 51 mm [2 in] CLEARANCE ABOVE E-VENT.
12. WEIGHT AND CENTER OF GRAVITY INFORMATION IS ESTIMATED AND CHANGES WITH TANK FEATURE INSTALLATION.

PART NUMBER IDENTIFICATION		
GENSET MODEL APPLICATION	TANK FEATURE CODE/RUN TIME	
	C319-2	C320-2
	24 HR	48 HR
C10 D6	A045T328	A045T334
C15 D6	A045T328	A045T334
C20 D6	A045T328	A045T334

TABULATION										
TANK NUMBER	TANK HEIGHT	E-VENT SIZE	TANK VOLUME-LITER [GAL]		WEIGHT kg [lb]		CG_X		CG_Y	
			TOTAL (EST)	USABLE	MIN	MAX	MIN	MAX	MIN	MAX
A045T328	330 [13]	3" NPT	182 [48]	174 [46]	130 [286]	152 [334]	1016 [40]	1067 [42]	152 [6]	203 [8]
A045T334	584 [23]	3" NPT	363 [96]	344 [91]	240 [529]	289 [637]	1016 [40]	1067 [42]	279 [11]	330 [13]

UNLESS OTHERWISE SPECIFIED, ALL DIMENSIONS ARE IN MILLIMETERS
DIM: X ±1; .X ±0.8; .XX± 0.38
HOLE: 0.00- 4.99 +0.15/-0.08; 5.00- 9.99 +0.20/-0.10; 10.00-17.49 +0.25/-0.13; 17.50-24.99 +0.30/-0.13
ANG TOL: ± 1.0°
SCALE: 1:8
SIM TO .
DO NOT SCALE PRINT
- CONFIDENTIAL - PROPERTY OF CUMMINS POWER GENERATION GROUP
DRN R.HALVERSON
CKD M.GRIFFITH
APVD M.GRIFFITH
DATE 08AUG13
FOR INTERPRETATION OF DIMENSIONING AND TOLERANCING, SEE ASME Y14.5M-1994
FIRST USED ON ARROW
SITE CODE PGF
CUMMINS POWER GENERATION
OUTLINE,FUEL TANK
PLATFORM-1 BASIC
DWG SIZE D
A047D042
SHEET 1 of 3
DWG REV A

Creo Parametric

REL NO	LTR	NO	REVISION	DRN	CKD	APVD	DATE
ECO-138549	A	1	PRODUCTION_RELEASE	RAH	MMG	M.GRIFFITH	08AUG13

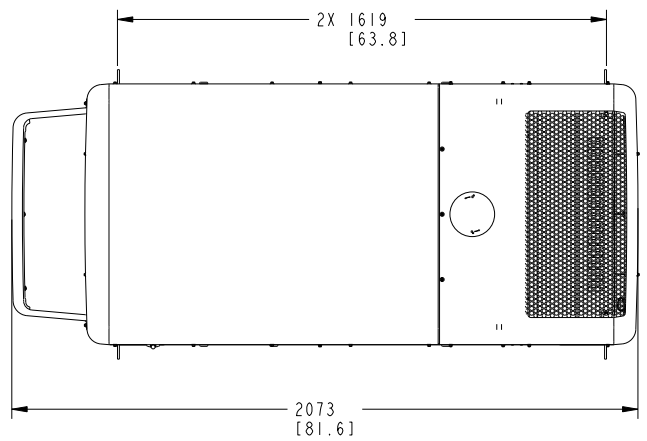

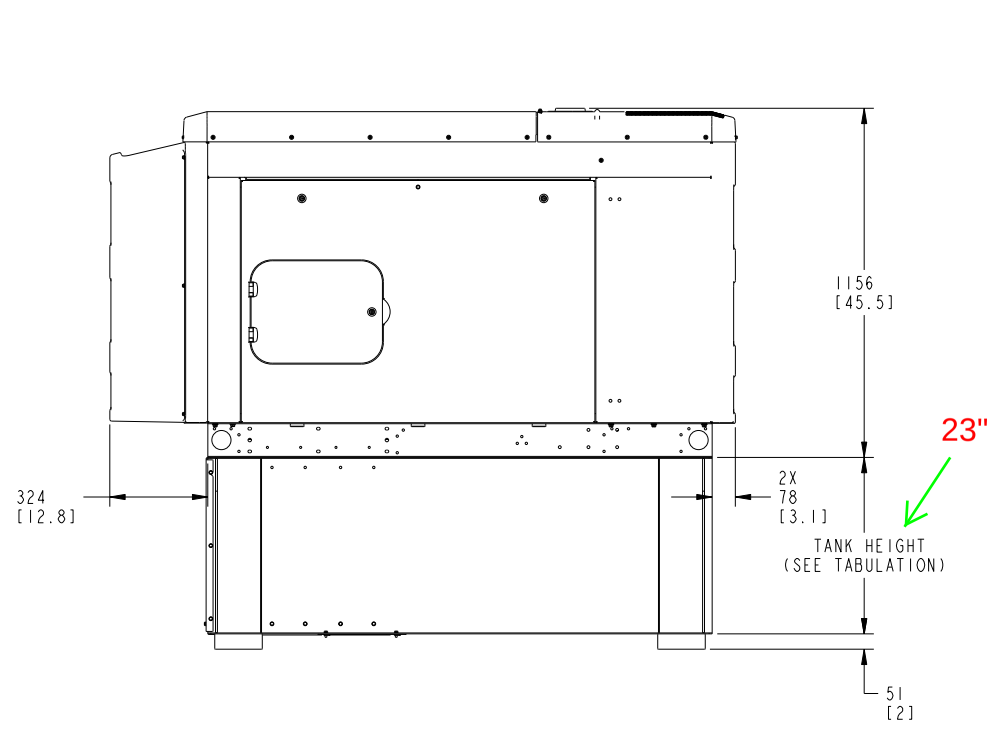

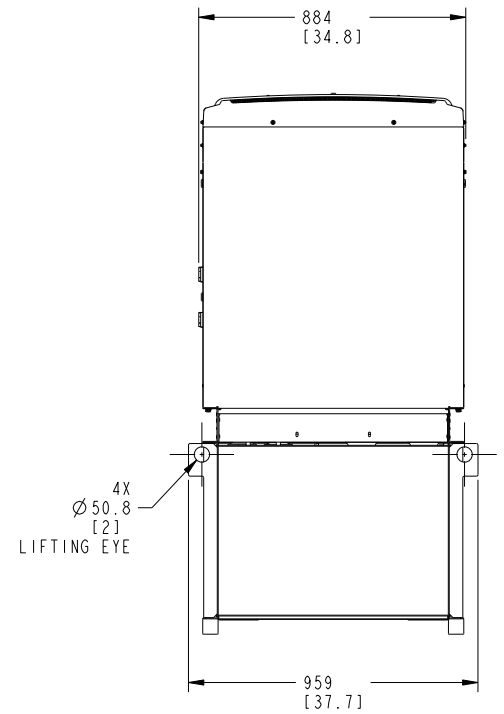

UNLESS OTHERWISE SPECIFIED, ALL DIMENSIONS ARE IN MILLIMETERS		SIM TO	DRN R.HALVERSON		CUMMINS POWER GENERATION
DIM: X ±1; .X ±0.8; .XX± 0.38 — HOLE: 0.00-4.99 +0.15/-0.08; 5.00-9.99 +0.20/-0.10; 10.00-17.49 +0.25/-0.13; 17.50-24.99 +0.30/-0.13		DO NOT SCALE PRINT	CKD M.GRIFFITH		OUTLINE,FUEL TANK
		- CONFIDENTIAL - PROPERTY OF CUMMINS POWER GENERATION GROUP	APVD M.GRIFFITH	SITE CODE	PLATFORM-1 BASIC
ANG TOL: ± 1.0°	SCALE: 3:32		DATE 08AUG13	PGF	DWG SIZE D — A047D042 — SHEET 2 of 3 — DWG REV A
			FOR INTERPRETATION OF DIMENSIONING AND TOLERANCING, SEE ASME Y14.5M-1994 — FIRST USED ON ARROW		

Creo Parametric

REL NO	LTR	NO	REVISION	DRN	CKD	APVD	DATE
ECO-138549	A	1	PRODUCTION_RELEASE	RAH	MMG	M.GRIFFITH	08AUG13

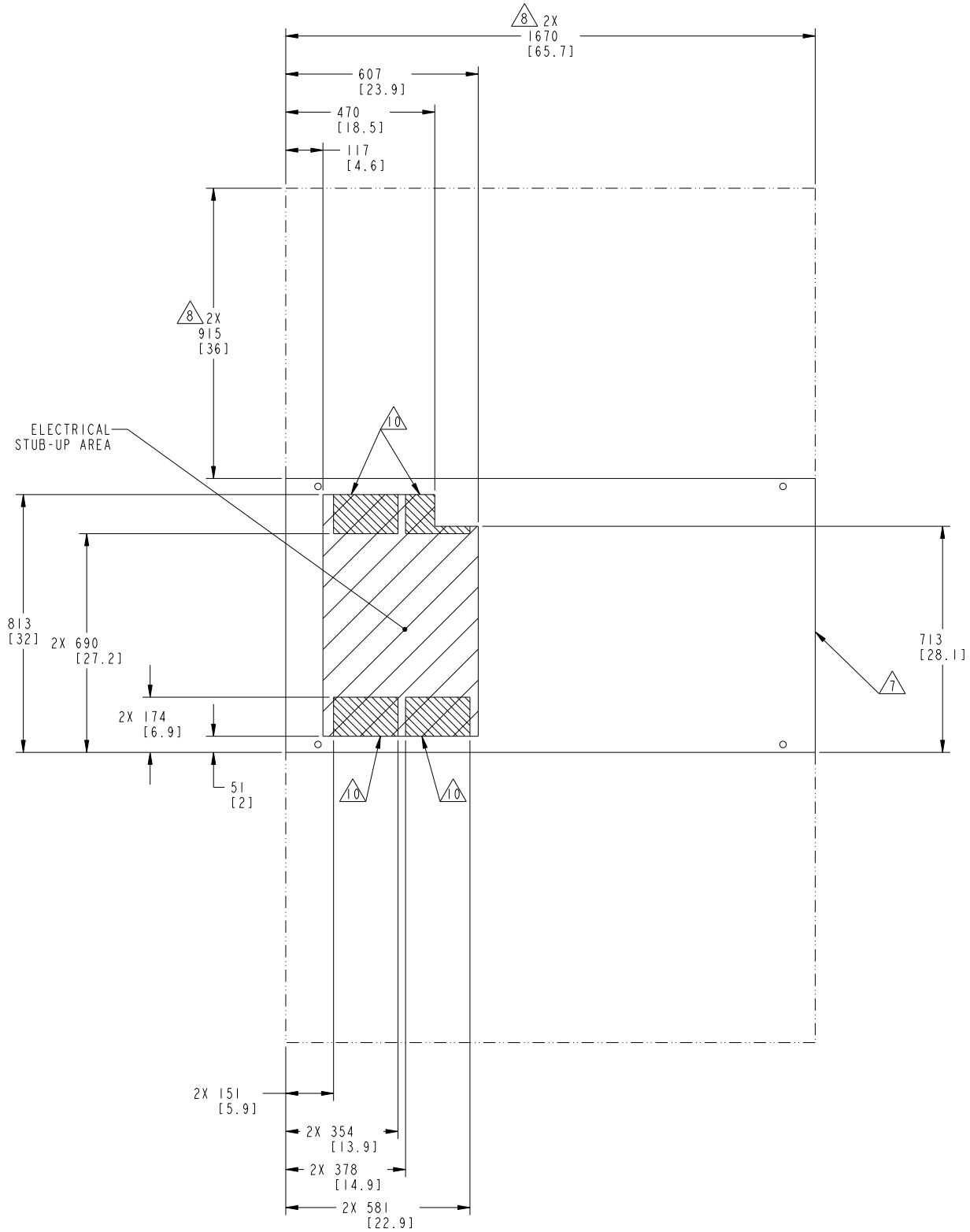

UNLESS OTHERWISE SPECIFIED, ALL DIMENSIONS ARE IN MILLIMETERS			SIM TO	DRN R.HALVERSON		CUMMINS POWER GENERATION
DIM: X ±1; .X ±0.8; .XX± 0.38	HOLE: 0.00- 4.99 +0.15/-0.08; 5.00- 9.99 +0.20/-0.10; 10.00-17.49 +0.25/-0.13; 17.50-24.99 +0.30/-0.13		DO NOT SCALE PRINT	CKD M.GRIFFITH	SITE CODE	OUTLINE,FUEL TANK
ANG TOL: ± 1.0°	SCALE: 1:8	- CONFIDENTIAL - PROPERTY OF CUMMINS POWER GENERATION GROUP		APVD M.GRIFFITH		PLATFORM-1 BASIC
				DATE 08AUG13		
			FOR INTERPRETATION OF DIMENSIONING AND TOLERANCING, SEE ASME Y14.5M-1994	FIRST USED ON ARROW	PGF	DWG SIZE D — A047D042 — SHEET 3 of 3 — DWG REV A

Attachment D
MSDS for Diesel Fuel

SAFETY DATA SHEET

SDS ID NO.: 0290MAR019
Revision Date: 06/01/2016

1. IDENTIFICATION

Product Name: Marathon Petroleum No. 2 Ultra Low Sulfur Diesel

Synonym: #2 Diesel; No. 2 Ultra Low Sulfur Diesel 15 ppm Sulfur Max; Ultra Low Sulfur Diesel No. 2 15 ppm Sulfur Max; Ultra Low Sulfur Diesel No. 2 15 ppm Sulfur Max with Polar Plus; No. 2 Diesel, Motor Vehicle Use, Undyed; No. 2 Diesel, Motor Vehicle Use, Undyed, with Polar Plus; ULSD No. 2 Diesel 15 ppm Sulfur Max; ULSD No. 2 Diesel 15 ppm Sulfur Max with Polar Plus; No. 2 MV 15 Diesel; No. 2 MV 15 Diesel with Polar Plus; No. 2 Ultra Low Sulfur Diesel Dyed 15 ppm Sulfur Max; Ultra Low Sulfur Diesel No. 2 Dyed 15 ppm Sulfur Max; Ultra Low Sulfur Diesel No. 2 Dyed 15 ppm Sulfur Max with Polar Plus; No. 2 Diesel, Tax Exempt-Motor Vehicle Use, Dyed; No. 2 Diesel, Tax Exempt-Motor Vehicle Use, Dyed, with Polar Plus; ULSD No. 2 Diesel Dyed 15 ppm Sulfur Max; ULSD No. 2 Diesel Dyed 15 ppm Sulfur Max, with Polar Plus; No. 2 MV 15 Diesel Dyed; #2 MV 15 CFI Diesel; #2 MV 15 CFI Diesel Dyed; No. 2 Low Sulfur Diesel (TxLED); No. 2 MV 15 Diesel Dyed, with Polar Plus; No. 2 NRLM 15 Diesel Dyed; No.2 NRLM Diesel Dyed; No. 2 MV 500 ppm TxLED; No.2 Low Emission Low Sulfur Diesel; No. 2 Low Sulfur Diesel (TxLED) 500 ppm Sulfur Max; No. 2 Heating Oil 5000 NMA Unmarked; NEMA No. 2 Heating Oil; Heating Oil, No. 2 Low Sulfur 5000 ppm; No. 2 Ultra Low Sulfur Diesel Dyed with <6% Renewable Diesel Fuel; Ultra Low Sulfur No. 2 Diesel Dyed with <6% Renewable Diesel Fuel; No. 2 Diesel Dyed with <6% Renewable Diesel Fuel 15 ppm Sulfur Max; No. 2 Ultra Low Sulfur Diesel with <6% Renewable Diesel Fuel; Ultra Low Sulfur No. 2 Diesel with <6% Renewable Diesel Fuel; No. 2 Diesel with <6% Renewable Diesel Fuel 15 ppm Sulfur Max; Garyville Export Diesel; Export Diesel, Garyville; Diesel Fuel, Export Garyville; #2 Motor Vehicle ULSD 15 ppm with 0-5% Renewable Diesel; Marathon No. 2 ULSD with 0-5% Renewable Fuel with R100; Marathon No. 2 ULSD with 0-5% Renewable Fuel with R99; No. 2 Heating Oil 2000 ppm Sulfur Max, Clear (Undyed) Unmarked;Ultra Low Sulfur Heating Oil 15 ppm Sulfur Max, Clear (Undyed) Unmarked; ULS Heating Oil 15 ppm Clear (Undyed) Unmarked; ULS HO 15 ppm CLR; Ultra-Low Sulfur Heating Oil (<= 15ppm, Undyed); No. 2 Heating Oil 2000 ppm Sulfur Max, Dyed Unmarked; No. 2 Heating Oil 2000 ppm Sulfur Max, Dyed Marked; Ultra Low Sulfur Heating Oil 15 ppm Sulfur Max, Dyed Unmarked; Ultra Low Sulfur Heating Oil 15 ppm Sulfur Max, Dyed Marked;15 ppm Sulfur Heating Oil Grade 67; 15 PPM Heating Oil; 15 PPM Dyed Heating Oil; 0291MAR019; 0306MAR019; 0308MAR019; 0334MAR019; 0335MAR019; 0336MAR019; 0337MAR019; 0340MAR019;

Chemical Family: Complex Hydrocarbon Substance

Recommended Use: Fuel.
Restrictions on Use: All others.

Manufacturer, Importer, or Responsible Party Name and Address:

MARATHON PETROLEUM COMPANY LP
539 South Main Street
Findlay, OH 45840

SDS information: 1-419-421-3070

Emergency Telephone: 1-877-627-5463

2. HAZARD IDENTIFICATION

Classification

OSHA Regulatory Status
This chemical is considered hazardous by the 2012 OSHA Hazard Communication Standard (29 CFR 1910.1200)

Flammable liquids	Category 3
Acute toxicity - Inhalation (Dusts/Mists)	Category 4
Skin corrosion/irritation	Category 2
Carcinogenicity	Category 2
Specific target organ toxicity (single exposure)	Category 3
Specific target organ toxicity (repeated exposure)	Category 2
Aspiration toxicity	Category 1
Acute aquatic toxicity	Category 2
Chronic aquatic toxicity	Category 2

Hazards Not Otherwise Classified (HNOC)
Static accumulating flammable liquid

Label elements

EMERGENCY OVERVIEW

Danger

FLAMMABLE LIQUID AND VAPOR
May accumulate electrostatic charge and ignite or explode
May be fatal if swallowed and enters airways
Harmful if inhaled
Causes skin irritation
May cause respiratory irritation
May cause drowsiness or dizziness
Suspected of causing cancer
May cause damage to organs (thymus, liver, bone marrow) through prolonged or repeated exposure
Toxic to aquatic life with long lasting effects

Appearance Yellow to Red Liquid **Physical State** Liquid **Odor** Hydrocarbon

Precautionary Statements - Prevention
Obtain special instructions before use
Do not handle until all safety precautions have been read and understood
Keep away from heat/sparks/open flames/hot surfaces. - No smoking
Keep container tightly closed
Ground/bond container and receiving equipment
Use only non-sparking tools.
Use explosion-proof electrical/ventilating/lighting/equipment
Take precautionary measures against static discharge
Do not breathe mist/vapors/spray
Use only outdoors or in a well-ventilated area
Wear protective gloves/protective clothing/eye protection/face protection

Wash hands and any possibly exposed skin thoroughly after handling
Avoid release to the environment

Precautionary Statements - Response
IF exposed or concerned: Get medical attention
IF ON SKIN (or hair): Take off immediately all contaminated clothing. Rinse skin with water/shower
If skin irritation occurs: Get medical attention
Wash contaminated clothing before reuse
IF INHALED: Remove victim to fresh air and keep at rest in a position comfortable for breathing
Call a POISON CENTER or doctor if you feel unwell
IF SWALLOWED: Immediately call a POISON CENTER or doctor
Do NOT induce vomiting
In case of fire: Use water spray, fog or regular foam for extinction
Collect spillage

Precautionary Statements - Storage
Store in a well-ventilated place. Keep container tightly closed
Keep cool
Store locked up

Precautionary Statements - Disposal
Dispose of contents/container at an approved waste disposal plant

3. COMPOSITION/INFORMATION ON INGREDIENTS

No. 2 Ultra Low Sulfur Diesel is a complex mixture of paraffins, cycloparaffins, olefins and aromatic hydrocarbon chain lengths predominantly in the range of eleven to twenty carbons. May contain up to 5% Renewable Diesel. May contain small amounts of dye and other additives (<0.15%) which are not considered hazardous at the concentration(s) used. May contain a trace amount of benzene (<0.01%). Contains a trace amount of sulfur (<0.0015%)

Composition Information:

Name	CAS Number	% Concentration
No. 2 Diesel Fuel	68476-34-6	50-100
Kerosine, Petroleum	8008-20-6	0-50
Alkanes, C10-C20 branched and linear	928771-01-1	0-5
Naphthalene	91-20-3	0.3-2.6

All concentrations are percent by weight unless material is a gas. Gas concentrations are in percent by volume.

4. FIRST AID MEASURES

First Aid Measures

General Advice: In case of accident or if you feel unwell, seek medical advice immediately (show directions for use or safety data sheet if possible).

Inhalation: Remove to fresh air. If not breathing, institute rescue breathing. If breathing is difficult, ensure airway is clear, give oxygen and continue to monitor. If heart has stopped, immediately begin cardiopulmonary resuscitation (CPR). Keep affected person warm and at rest. GET IMMEDIATE MEDICAL ATTENTION.

Skin Contact: Immediately wash exposed skin with plenty of soap and water while removing contaminated clothing and shoes. May be absorbed through the skin in harmful amounts. Get medical attention if irritation persists. Any injection injury from high pressure equipment should be evaluated immediately by a physician as potentially serious (See NOTES TO PHYSICIAN).

Place contaminated clothing in closed container until cleaned or discarded. If clothing is to be laundered, inform the person performing the operation of contaminant's hazardous properties. Destroy contaminated, non-chemical resistant footwear.

Eye Contact: Flush immediately with large amounts of water for at least 15 minutes. Eyelids should be held away from the eyeball to ensure thorough rinsing. Gently remove contacts while flushing. Get medical attention if irritation persists.

Ingestion: Do not induce vomiting because of danger of aspirating liquid into lungs, causing serious damage and chemical pneumonitis. If spontaneous vomiting occurs, keep head below hips, or if patient is lying down, turn body and head to side to prevent aspiration and monitor for breathing difficulty. Never give anything by mouth to an unconscious person. Keep affected person warm and at rest. GET IMMEDIATE MEDICAL ATTENTION.

Most important signs and symptoms, both short-term and delayed with overexposure

Adverse Effects: Irritating to the skin and mucous membranes. Symptoms may include redness, itching, and inflammation. May cause nausea, vomiting, diarrhea, and signs of nervous system depression: headache, drowsiness, dizziness, loss of coordination, disorientation and fatigue. Aspiration hazard. May cause coughing, chest pains, shortness of breath, pulmonary edema and/or chemical pneumonitis. Repeated or prolonged skin contact may cause drying, reddening, itching and cracking. Prolonged or repeated exposure may cause adverse effects to the thymus, liver, and bone marrow.

Indication of any immediate medical attention and special treatment needed

Notes To Physician: INHALATION: This material (or a component) sensitizes the myocardium to the effects of sympathomimetic amines. Epinephrine and other sympathomimetic drugs may initiate cardiac arrhythmias in individuals exposed to this material. Administration of sympathomimetic drugs should be avoided.

SKIN: Leaks or accidents involving high-pressure equipment may inject a stream of material through the skin and initially produce an injury that may not appear serious. Only a small puncture wound may appear on the skin surface but, without proper treatment and depending on the nature, original pressure, volume, and location of the injected material, can compromise blood supply to an affected body part. Prompt surgical debridement of the wound may be necessary to prevent irreversible loss of function and/or the affected body part. High pressure injection injuries may be SERIOUS SURGICAL EMERGENCIES.

INGESTION: This material represents a significant aspiration and chemical pneumonitis hazard. Induction of emesis is not recommended.

5. FIRE-FIGHTING MEASURES

Suitable extinguishing media
For small fires, Class B fire extinguishing media such as CO2, dry chemical, foam (AFFF/ATC) or water spray can be used. For large fires, water spray, fog or foam (AFFF/ATC) can be used. Firefighting should be attempted only by those who are adequately trained and equipped with proper protective equipment.

Unsuitable extinguishing media
Do not use straight water streams to avoid spreading fire.

Specific hazards arising from the chemical
This product has been determined to be a flammable liquid per the OSHA Hazard Communication Standard and should be handled accordingly. May accumulate electrostatic charge and ignite or explode. Vapors may travel along the ground or be moved by ventilation and ignited by many sources such as pilot lights, sparks, electric motors, static discharge, or other ignition sources at locations distant from material handling. Flashback can occur along vapor trail. For additional fire related information, see NFPA 30 or the Emergency Response Guidebook 128.

Hazardous combustion products
Smoke, carbon monoxide, and other products of incomplete combustion.

Explosion data
Sensitivity to Mechanical Impact No.

Sensitivity to Static Discharge Yes.

Special protective equipment and precautions for firefighters
Firefighters should wear full protective clothing and positive-pressure self-contained breathing apparatus (SCBA) with a full face-piece, as appropriate. Avoid using straight water streams. Water spray and foam (AFFF/ATC) must be applied carefully to avoid frothing and from as far a distance as possible. Avoid excessive water spray application. Keep surrounding area cool with water spray from a distance and prevent further ignition of combustible material. Keep run-off water out of sewers and water sources.

Additional firefighting tactics
FIRES INVOLVING TANKS OR CAR/TRAILER LOADS: Fight fire from maximum distance or use unmanned hose holders or monitor nozzles. Cool containers with flooding quantities of water until well after the fire is out. Do not direct water at source of leak or safety devices; icing may occur. Withdraw immediately in case of rising sound from venting safety devices or discoloration of tank. ALWAYS stay away from tanks engulfed in fire. For massive fire, use unmanned hose holders or monitor nozzles: if this is impossible, withdraw from area and let fire burn.

EVACUATION: Consider initial downwind evacuation for at least 1000 feet. If tank, rail car or tank truck is involved in a fire, ISOLATE for 5280 feet (1 mile) in all directions; also, consider initial evacuation of 5280 feet (1 mile) in all directions.

NFPA	Health 1	Flammability 2	Instability 0	Special Hazard -

6. ACCIDENTAL RELEASE MEASURES

Personal precautions: Keep public away. Isolate and evacuate area. Shut off source if safe to do so. Eliminate all ignition sources. All contaminated surfaces will be slippery.

Protective equipment: Use personal protection measures as recommended in Section 8.

Emergency procedures: Advise authorities and National Response Center (800-424-8802) if the product has entered a water course or sewer. Notify local health and pollution control agencies, if appropriate.

Environmental precautions: Avoid release to the environment. Avoid subsoil penetration.

Methods and materials for containment: Contain liquid with sand or soil. Prevent spilled material from entering storm drains, sewers, and open waterways.

Methods and materials for cleaning up: Use suitable absorbent materials such as vermiculite, sand, or clay to clean up residual liquids. Recover and return free product to proper containers. When recovering free liquids ensure all equipment is grounded and bonded. Use only non-sparking tools.

7. HANDLING AND STORAGE

Safe Handling Precautions: NEVER SIPHON THIS PRODUCT BY MOUTH. Use appropriate grounding and bonding practices. Static accumulating flammable liquid. Bonding and grounding may be insufficient to eliminate the hazard from static electricity. Do not expose to heat, open flames, strong oxidizers or other sources of ignition. Vapors may travel along the ground or be moved by ventilation. Flashback may occur along vapor trails. No smoking. Use only non-sparking tools. Avoid breathing fumes, gas, or vapors. Use only with adequate ventilation. Avoid repeated and prolonged skin contact. Use personal protection measures as recommended in Section 8. Exercise good personal hygiene including removal of soiled clothing and prompt washing with soap and water. Do not cut, drill, grind or weld on empty containers since explosive residues may remain. Refer to applicable EPA, OSHA, NFPA and consistent state and local requirements.

Hydrocarbons are basically non-conductors of electricity and can become electrostatically charged during mixing, filtering, pumping at high flow rates or loading and transfer operations. If this charge reaches a sufficiently high level, sparks can form that may ignite the vapors of flammable liquids. Sudden release of hot organic chemical vapors or mists

from process equipment operating under elevated temperature and pressure, or sudden ingress of air into vacuum equipment may result in ignition of vapors or mists without the presence of obvious ignition sources. Nozzle spouts must be kept in contact with the containers or tank during the entire filling operation.

Portable containers should never be filled while in or on a motor vehicle or marine craft. Containers should be placed on the ground. Static electric discharge can ignite fuel vapors when filling non-grounded containers or vehicles on trailers. The nozzle spout must be kept in contact with the container before and during the entire filling operation. Use only approved containers.

A buildup of static electricity can occur upon re-entry into a vehicle during fueling especially in cold or dry climate conditions. The charge is generated by the action of dissimilar fabrics (i.e., clothing and upholstery) rubbing across each other as a person enters/exits the vehicle. A flash fire can result from this discharge if sufficient flammable vapors are present. Therefore, do not get back in your vehicle while refueling.

Cellular phones and other electronic devices may have the potential to emit electrical charges (sparks). Sparks in potentially explosive atmospheres (including fueling areas such as gas stations) could cause an explosion if sufficient flammable vapors are present. Therefore, turn off cellular phones and other electronic devices when working in potentially explosive atmospheres or keep devices inside your vehicle during refueling.

High-pressure injection of any material through the skin is a serious medical emergency even though the small entrance wound at the injection site may not initially appear serious. These injection injuries can occur from high-pressure equipment such as paint spray or grease or guns, fuel injectors, or pinhole leaks in hoses or hydraulic lines and should all be considered serious. High pressure injection injuries may be SERIOUS SURGICAL EMERGENCIES (See First Aid Section 4).

Storage Conditions: Store in properly closed containers that are appropriately labeled and in a cool, well-ventilated area. Do not store near an open flame, heat or other sources of ignition.

Incompatible Materials Strong oxidizing agents.

8. EXPOSURE CONTROLS/PERSONAL PROTECTION

Name	ACGIH TLV	OSHA PELS:	OSHA - Vacated PELs	NIOSH IDLH
No. 2 Diesel Fuel 68476-34-6	100 mg/m³ TWA Skin - potential significant contribution to overall exposure by the cutaneous route	-	-	-
Kerosine, Petroleum 8008-20-6	200 mg/m³ TWA Skin - potential significant contribution to overall exposure by the cutaneous route	-	-	-
Alkanes, C10-C20 branched and linear 928771-01-1	-	-	-	-
Naphthalene 91-20-3	10 ppm TWA Skin - potential significant contribution to overall exposure by the cutaneous route	TWA: 10 ppm TWA: 50 mg/m³	10 ppm TWA 50 mg/m³ TWA 15 ppm STEL 75 mg/m³ STEL	250 ppm

Notes: The manufacturer has voluntarily elected to provide exposure limits contained in OSHA's 1989 air contaminants standard in its SDSs, even though certain of those exposure limits were vacated in 1992.

Engineering measures: Local or general exhaust required in an enclosed area or with inadequate ventilation. Use mechanical ventilation equipment that is explosion-proof.

Personal protective equipment

Eye protection:	Use goggles or face-shield if the potential for splashing exists.
Skin and body protection:	Wear neoprene, nitrile or PVA gloves to prevent skin contact. Glove suitability is based on workplace conditions and usage. Contact the glove manufacturer for specific advice on glove selection and breakthrough times.
Respiratory protection:	Use a NIOSH approved organic vapor chemical cartridge or supplied air respirators when there is the potential for airborne exposures to exceed permissible exposure limits or if excessive vapors are generated. Observe respirator assigned protection factors (APFs) criteria cited in federal OSHA 29 CFR 1910.134. Self-contained breathing apparatus should be used for fire fighting.
Hygiene measures:	Handle in accordance with good industrial hygiene and safety practice. Avoid contact with skin, eyes and clothing.

9. PHYSICAL AND CHEMICAL PROPERTIES

Information on basic physical and chemical properties

Physical State	Liquid
Appearance	Yellow to Red Liquid
Color	Yellow to Red
Odor	Hydrocarbon
Odor Threshold	No data available.

Property	**Values (Method)**
Melting Point / Freezing Point	No data available.
Initial Boiling Point / Boiling Range	154-366 °C / 310-691 °F (ASTM D86)
Flash Point	58-76 °C / 136-168 °F (ASTM D93)
Evaporation Rate	No data available.
Flammability (solid, gas)	Not applicable.
Flammability Limit in Air (%):	
Upper Flammability Limit:	No data available.
Lower Flammability Limit:	No data available.
Explosion limits:	No data available.
Vapor Pressure	No data available.
Vapor Density	No data available.
Specific Gravity / Relative Density	0.82-0.86 (ASTM D4052)
Water Solubility	No data available.
Solubility in other solvents	No data available.
Partition Coefficient	No data available.
Decomposition temperature	No data available.
pH:	Not applicable
Autoignition Temperature	No data available.
Kinematic Viscosity	1.90-3.32 cSt @ 40°C (ASTM D445)
Dynamic Viscosity	No data available.
Explosive Properties	No data available.
VOC Content (%)	No data available.
Density	No data available.
Bulk Density	Not applicable.

10. STABILITY AND REACTIVITY

Reactivity	The product is non-reactive under normal conditions.
Chemical stability	The material is stable at 70°F, 760 mmHg pressure.

Possibility of hazardous reactions None under normal processing.

Hazardous polymerization Will not occur.

Conditions to avoid Excessive heat, sources of ignition, open flame.

Incompatible Materials Strong oxidizing agents.

Hazardous decomposition products None known under normal conditions of use.

11. TOXICOLOGICAL INFORMATION

Potential short-term adverse effects from overexposures

Inhalation Harmful if inhaled. May cause irritation of respiratory tract. May cause drowsiness or dizziness. Breathing high concentrations of this material in a confined space or by intentional abuse can cause irregular heartbeats which can cause death.

Eye contact Exposure to vapor or contact with liquid may cause mild eye irritation, including tearing, stinging, and redness.

Skin contact Causes skin irritation. Effects may become more serious with repeated or prolonged contact. May be absorbed through the skin in harmful amounts.

Ingestion May be fatal if swallowed or vomited and enters airways. May cause irritation of the mouth, throat and gastrointestinal tract.

Acute toxicological data

Name	Oral LD50	Dermal LD50	Inhalation LC50
No. 2 Diesel Fuel 68476-34-6	> 5000 mg/kg (Rat)	> 2000 mg/kg (Rabbit)	>1 - <5 mg/L (Rat) 4 h
Kerosine, Petroleum 8008-20-6	> 5000 mg/kg (Rat)	> 2000 mg/kg (Rabbit)	> 5.28 mg/L (Rat) 4 h
Alkanes, C10-C20 branched and linear 928771-01-1	-	-	>1 - <5 mg/l (Rat) 4 h
Naphthalene 91-20-3	490 mg/kg (Rat)	> 2000 mg/kg (Rabbit)	> 340 mg/m³ (Rat) 1 h

Delayed and immediate effects as well as chronic effects from short and long-term exposure

MIDDLE DISTILLATES, PETROLEUM: Long-term repeated (lifetime) skin exposure to similar materials has been reported to result in an increase in skin tumors in laboratory rodents. The relevance of these findings to humans is not clear at this time. Altered mental state, drowsiness, peripheral motor neuropathy, irreversible brain damage (so-called Petrol Sniffer's Encephalopathy), delirium, seizures, and sudden death have been reported from repeated overexposure to some hydrocarbon solvents, naphthas, and gasoline.

MIDDLE DISTILLATES WITH CRACKED STOCKS: Light cracked distillates have been shown to be carcinogenic in animal tests and have tested positive with in vitro genotoxicity tests. Repeated dermal exposures to high concentrations in test animals resulted in reduced litter size and litter weight, and increased fetal resorptions at maternally toxic doses. Dermal exposure to high concentrations resulted in severe skin irritation with weight loss and some mortality. Inhalation exposure to high concentrations resulted in respiratory tract irritation, lung changes/infiltration/accumulation, and reduction in lung function.

ISOPARAFFINS: Studies in laboratory animals have shown that long-term exposure to similar materials (isoparaffins) can cause kidney damage and kidney cancer in male laboratory rats. However, in-depth research indicates that these findings are unique to the male rat, and that these effects are not relevant to humans.

NAPHTHALENE: Severe jaundice, neurotoxicity (kernicterus) and fatalities have been reported in young children and infants as a result of hemolytic anemia from overexposure to naphthalene. Persons with glucose 6-phosphate dehydrogenase (G6PD) deficiency are more prone to the hemolytic effects of naphthalene. Adverse effects on the kidney have been reported in persons overexposed to naphthalene but these effects are believed to be a consequence of hemolytic anemia, and not a direct effect. Hemolytic anemia has been observed in laboratory animals exposed to naphthalene. Laboratory rodents exposed to naphthalene vapor for 2 years (lifetime studies) developed non-neoplastic and neoplastic tumors and inflammatory lesions of the nasal and respiratory tract. Cataracts and other adverse effects on the eye have been observed in laboratory animals exposed to high levels of naphthalene. Findings from a large number of bacterial and mammalian cell mutation assays have been negative. A few studies have shown chromosomal effects (elevated levels of Sister Chromatid Exchange or chromosomal aberrations) in vitro. Naphthalene has been classified as Possibly Carcinogenic to Humans (2B) by IARC, based on findings from studies in laboratory animals.

DIESEL EXHAUST: The combustion of diesel fuels produces gases including carbon monoxide, carbon dioxide, oxides of nitrogen and/or sulfur, and hydrocarbons that can be irritating and hazardous with overexposure. Long-term occupational overexposure to diesel exhaust and diesel exhaust particulate matter has been associated with an increased risk of respiratory disease, including lung cancer, and is characterized as a “known human carcinogen” by the International Agency for Research on Cancer (IARC), as “a reasonably anticipated human carcinogen” by the National Toxicology Program, and as “likely to be carcinogenic to humans” by the EPA, based upon animal and occupational exposure studies. However, uncertainty exists with these classifications because of deficiencies in the supporting occupational exposure/epidemiology studies, including reliable exposure estimates. Lifetime animal inhalation studies with pulmonary overloading exposure concentrations of diesel exhaust emissions have produced tumors and other adverse health effects. However, in more recent long-term animal inhalation studies of diesel exhaust emissions, no increase in tumor incidence and in fact a substantial reduction in adverse health effects along with significant reductions in the levels of hazardous material emissions were observed and are associated with fuel composition alterations coupled with new technology diesel engines.

Adverse effects related to the physical, chemical and toxicological characteristics

Signs and Symptoms Irritating to the skin and mucous membranes. Symptoms may include redness, itching, and inflammation. May cause nausea, vomiting, diarrhea, and signs of nervous system depression: headache, drowsiness, dizziness, loss of coordination, disorientation and fatigue. Aspiration hazard. May cause coughing, chest pains, shortness of breath, pulmonary edema and/or chemical pneumonitis. Repeated or prolonged skin contact may cause drying, reddening, itching and cracking. Prolonged or repeated exposure may cause damage to organs.

Sensitization Not expected to be a skin or respiratory sensitizer.

Mutagenic effects None known.

Carcinogenicity Suspected of causing cancer.

Cancer designations are listed in the table below

Name	ACGIH (Class)	IARC (Class)	NTP	OSHA
No. 2 Diesel Fuel 68476-34-6	Confirmed animal carcinogen (A3)	Not Classifiable (3)	Not Listed	Not Listed
Kerosine, Petroleum 8008-20-6	Confirmed animal carcinogen (A3)	Not Classifiable (3)	Not Listed	Not Listed
Alkanes, C10-C20 branched and linear 928771-01-1	Not Listed	Not Listed	Not Listed	Not Listed
Naphthalene	Confirmed animal	Possible human carcinogen	Reasonably anticipated to	Not Listed

91-20-3	carcinogen (A3)	(2B)	be a human carcinogen	

Reproductive toxicity None known.

Specific Target Organ Toxicity (STOT) - single exposure Respiratory system. Central nervous system.

Specific Target Organ Toxicity (STOT) - repeated exposure Thymus. Liver. Bone marrow.

Aspiration hazard May be fatal if swallowed or vomited and enters airways.

12. ECOLOGICAL INFORMATION

Ecotoxicity This product should be considered toxic to aquatic organisms, with the potential to cause long lasting adverse effects in the aquatic environment.

Name	Algae/aquatic plants	Fish	Toxicity to Microorganisms	Crustacea
No. 2 Diesel Fuel 68476-34-6	-	96-hr LC50 = 35 mg/l Fathead minnow (flow-through)	-	48-hr EL50 = 6.4 mg/l Daphnia magna
Kerosine, Petroleum 8008-20-6	72-hr EL50 = 5.0-11 mg/l Algae	96-hr LL50 = 18-25 mg/l Fish	-	48-hr EL50 = 1.4-21 mg/l Invertebrates
Alkanes, C10-C20 branched and linear 928771-01-1	-	-	-	-
Naphthalene 91-20-3	-	96-hr LC50 = 0.91-2.82 mg/l Rainbow trout (static) 96-hr LC50 = 1.99 mg/l Fathead minnow (static)	-	48-hr LC50 = 1.6 mg/l Daphnia magna

Persistence and degradability Expected to be inherently biodegradable.

Bioaccumulation Has the potential to bioaccumulate.

Mobility in soil May partition into air, soil and water.

Other adverse effects No information available.

13. DISPOSAL CONSIDERATIONS

Description of Waste Residues
This material may be a flammable liquid waste.

Safe Handling of Wastes
Handle in accordance with applicable local, state, and federal regulations. Use personal protection measures as required. Use appropriate grounding and bonding practices. Use only non-sparking tools. Do not expose to heat, open flames, strong oxidizers or other sources of ignition. No smoking.

Disposal of Wastes / Methods of Disposal
The user is responsible for determining if any discarded material is a hazardous waste (40 CFR 262.11). Dispose of in accordance with federal, state and local regulations.

Methods of Contaminated Packaging Disposal
Empty containers should be completely drained and then discarded or recycled, if possible. Do not cut, drill, grind or weld on empty containers since explosive residues may be present. Dispose of in accordance with federal, state and local regulations.

14. TRANSPORT INFORMATION

DOT (49 CFR 172.101):

UN Proper Shipping Name:	Fuel Oil, No. 2
UN/Identification No:	NA 1993
Transport Hazard Class(es):	3
Packing Group:	III

TDG (Canada):

UN Proper Shipping Name:	Diesel Fuel
UN/Identification No:	UN 1202
Transport Hazard Class(es):	3
Packing Group:	III

15. REGULATORY INFORMATION

US Federal Regulatory Information:

US TSCA Chemical Inventory Section 8(b): This product and/or its components are listed on the TSCA Chemical Inventory.

EPA Superfund Amendment & Reauthorization Act (SARA):

SARA Section 302: This product does not contain any component(s) included on EPA's Extremely Hazardous Substance (EHS) List.

Name	CERCLA/SARA - Section 302 Extremely Hazardous Substances and TPQs
No. 2 Diesel Fuel	NA
Kerosine, Petroleum	NA
Alkanes, C10-C20 branched and linear	NA
Naphthalene	NA

SARA Section 304: This product may contain component(s) identified either as an EHS or a CERCLA Hazardous substance which in case of a spill or release may be subject to SARA reporting requirements:

Name	Hazardous Substances RQs
No. 2 Diesel Fuel	NA
Kerosine, Petroleum	NA
Alkanes, C10-C20 branched and linear	NA
Naphthalene	100 lb final RQ 45.4 kg final RQ

SARA: The following EPA hazard categories apply to this product:

Acute Health Hazard
Fire Hazard
Chronic Health Hazard

SARA Section 313: This product may contain component(s), which if in exceedance of the de minimus threshold, may be subject to the reporting requirements of SARA Title III Section 313 Toxic Release Reporting (Form R).

Name	CERCLA/SARA 313 Emission reporting:
No. 2 Diesel Fuel	None
Kerosine, Petroleum	None
Alkanes, C10-C20 branched and linear	None
Naphthalene	0.1 % de minimis concentration

State and Community Right-To-Know Regulations:
The following component(s) of this material are identified on the regulatory lists below:

No. 2 Diesel Fuel

Louisiana Right-To-Know:	Not Listed
California Proposition 65:	Not Listed
New Jersey Right-To-Know:	SN 2444
Pennsylvania Right-To-Know:	Not Listed
Massachusetts Right-To Know:	Not Listed
Florida Substance List:	Not Listed
Rhode Island Right-To-Know:	Not Listed
Michigan Critical Materials Register List:	Not Listed
Massachusetts Extraordinarily Hazardous Substances:	Not Listed
California - Regulated Carcinogens:	Not Listed
Pennsylvania RTK - Special Hazardous Substances:	Not Listed
New Jersey - Special Hazardous Substances:	Not Listed
New Jersey - Environmental Hazardous Substances List:	SN 2444 TPQ: 10000 lb (Under N.J.A.C. 7:1G, environmental hazardous substances in mixtures such as gasoline or new and used petroleum oil may be reported under these categories)
Illinois - Toxic Air Contaminants:	Not Listed
New York - Reporting of Releases Part 597 - List of Hazardous Substances:	Not Listed

Kerosine, Petroleum

Louisiana Right-To-Know:	Not Listed
California Proposition 65:	Not Listed
New Jersey Right-To-Know:	SN 1091
Pennsylvania Right-To-Know:	Present
Massachusetts Right-To Know:	Present
Florida Substance List:	Not Listed
Rhode Island Right-To-Know:	Not Listed
Michigan Critical Materials Register List:	Not Listed
Massachusetts Extraordinarily Hazardous Substances:	Not Listed
California - Regulated Carcinogens:	Not Listed
Pennsylvania RTK - Special Hazardous Substances:	Not Listed
New Jersey - Special Hazardous Substances:	Not Listed
New Jersey - Environmental Hazardous Substances List:	SN 1091 TPQ: 10000 lb (Under N.J.A.C. 7:1G, environmental hazardous substances in mixtures such as gasoline or new and used petroleum oil may be reported under these categories)
Illinois - Toxic Air Contaminants:	Not Listed
New York - Reporting of Releases Part 597 - List of Hazardous Substances:	Not Listed

Alkanes, C10-C20 branched and linear

Louisiana Right-To-Know:	Not Listed
California Proposition 65:	Not Listed
New Jersey Right-To-Know:	Not Listed
Pennsylvania Right-To-Know:	Not Listed
Massachusetts Right-To Know:	Not Listed
Florida Substance List:	Not Listed
Rhode Island Right-To-Know:	Not Listed
Michigan Critical Materials Register List:	Not Listed
Massachusetts Extraordinarily Hazardous Substances:	Not Listed
California - Regulated Carcinogens:	Not Listed
Pennsylvania RTK - Special Hazardous Substances:	Not Listed
New Jersey - Special Hazardous Substances:	Not Listed
New Jersey - Environmental Hazardous Substances List:	Not Listed
Illinois - Toxic Air Contaminants:	Not Listed
New York - Reporting of Releases Part 597 - List of Hazardous Substances:	Not Listed

Naphthalene

Louisiana Right-To-Know:	Not Listed
California Proposition 65:	Carcinogen, initial date 4/19/02

New Jersey Right-To-Know:	SN 1322 SN 3758
Pennsylvania Right-To-Know:	Environmental hazard Present (particulate)
Massachusetts Right-To Know:	Present
Florida Substance List:	Not Listed
Rhode Island Right-To-Know:	Toxic; Flammable
Michigan Critical Materials Register List:	Not Listed
Massachusetts Extraordinarily Hazardous Substances:	Not Listed
California - Regulated Carcinogens:	Not Listed
Pennsylvania RTK - Special Hazardous Substances:	Not Listed
New Jersey - Special Hazardous Substances:	Carcinogen
New Jersey - Environmental Hazardous Substances List:	SN 1322 TPQ: 500 lb (Reportable at the de minimis quantity of >0.1%)
Illinois - Toxic Air Contaminants:	Present
New York - Reporting of Releases Part 597 - List of Hazardous Substances:	100 lb RQ (air); 1 lb RQ (land/water)

Canada DSL/NDSL Inventory: This product and/or its components are listed either on the Domestic Substances List (DSL) or are exempt.

Canadian Regulatory Information: This product has been classified in accordance with the hazard criteria of the Controlled Products Regulations and the (M)SDS contains all the information required by the Controlled Products Regulations.

Name	Canada - WHMIS: Classifications of Substances:	Canada - WHMIS: Ingredient Disclosure:
No. 2 Diesel Fuel	B3,D2A,D2B	0.1%
Kerosine, Petroleum	B3,D2B	1%
Alkanes, C10-C20 branched and linear	B3,D2A,D2B	0.1%
Naphthalene	B4,D2A	0.1%

Note: Not applicable.

16. OTHER INFORMATION

Prepared By Toxicology and Product Safety

Revision Date: 06/01/2016

Revision Note:

Disclaimer

The information provided in this Safety Data Sheet is correct to the best of our knowledge, information and belief at the date of its publication. The information is intended as guidance for safe handling, use, processing, storage, transportation, accidental release, clean-up and disposal and is not considered a warranty or quality specification. The information relates only to the specific material designated and may not be valid for such material used in combination with any other materials or in any process, unless specified in the text.

Attachment E
Calculations and Supporting Documents

Emissions Definitions Regarding Kubota V2203M Generator Used in Cummins Power Generation

20 KW Stationary Gen Application Operation at 75% Capacity

ACTUAL Emissions Rates given by Technical Specs in lb/hr

Certified Values for this specific engine were used in the below calculations. Carb Certification in Appendix C. The generaor meets EPA Tier 4i Emission requirements they emit no more than what is specified in **40 CFR §89.112. For annual ACTUAL calculations, 500 hrs/year was used. The generator will be tested periodically and utilized only during power outages.**

NOx - on the attached EPA Engine Certification

Hourly NOx = 4.5 g/kW-hr * 20 kW * 1 lb/453.592g = 0.2 lb/hr

Annual NOx = 0.2 lb/hr * 500 hr/yr*l ton /20001bs = 0.05 ton/yr

CO - on the attached EPA Engine Certification

Hourly CO = 3.0 g/kW-hr * 20 kW * 1 lb/453.592g = 0.13 lb/hr

Annual CO= 0.13 lb/hr * 500 hr/yr*lton/2000lbs = 0.03 ton/yr

PM - on the attached EPA Engine Certification

Hourly PM = 0.14 g/kW-hr * 20 kW * 1 lb/453.592g = 0.01 lb/hr

Annul PM = 0.01 lb/hr * 500 hr/yr * 1ton/2000 lb = 0.002 ton/yr

HC - on the attached EPA Engine Certification

Hourly HC = 0.4 g/kW-hr * 20 kW * 1 lb/453.592g = 0.02 lb/hr

Annul HC = 0.02 lb/hr * 500 hr/yr * 1ton/2000 lb = 0.004 ton/yr

VOC - AP42

Per AP-42 Table 3.3-1, the emission factor of #2 Diesel Fuel is 0.00247 lb/hp-hr

Hourly VOC = 0.00247 lb/hp-hr * 26 bhp = 0.06 lb/hr

Yearly VOC= 0.06 lb/hr* 500 hr/yr * 1 ton/2000 lb = 0.02 ton/yr

SOx - AP42

Per AP-42 Table 3.3-1, the emission factor of #2 Diesel Fuel is 0.00205 lb/hp-hr

Hourly SO2 = 0.00205 lb/hp-hr * 26 bhp = 0.05 lb/hr

Yearly SO2 = 0.05 lb/hr* 500 hr/yr * 1ton/2000 lb = 0.01 ton/yr

Formaldehyde - AP42

Per AP-42 Table 3.3-2, the emission factor of #2 Diesel Fuel is 0.00118 lb/hp-hr

Hourly VOC = 0.00118 lb/hp-hr * 26 bhp = 0.03 lb/hr

Yearly formaldehyde = 0.03 lb/hr* 500 hr/yr * 1ton/2000 lb = 0.01 ton/yr

Emissions Definitions Regarding Kubota V2203M Generator Used in Cummins Power Generation

20 KW Stationary Gen Application Operation at 75% Capacity

POTENTIAL Emissions Rates given by Technical Specs in lb/hr

Certified Values for this specific engine were used in the below calculations. Carb Certification in Appendi
The generaor meets EPA Tier 4i Emission requirements they emit no more than what is specified in 40 CFR §89.112. **For annual POTENTIAL calculations, 8760 hrs/year was used. The generator will be used intermittently (<500 hrs/yr).**

NOx - on the attached EPA Engine Certification

Hourly NOx = 4.5 g/kW-hr * 20 kW * 1 lb/453.592g = 0.2 lb/hr
Annual NOx = 0.2 lb/hr * 8760 hr/yr*l ton /20001bs = 0.9 ton/yr

CO - on the attached EPA Engine Certification

Hourly CO = 3.0 g/kW-hr * 20 kW * 1 lb/453.592g = 0.13 lb/hr
Annual CO= 0.13 lb/hr * 8760 hr/yr*lton/2000lbs = 0.58 ton/yr

PM - on the attached EPA Engine Certification

Hourly PM = 0.14 g/kW-hr * 20 kW * 1 lb/453.592g = 0.01 lb/hr
Annul PM = 0.01 lb/hr * 8760 hr/yr * 1ton/2000 lb = 0.03 ton/yr

HC - on the attached EPA Engine Certification

Hourly HC = 0.4 g/kW-hr * 20 kW * 1 lb/453.592g = 0.02 lb/hr
Annul HC = 0.02 lb/hr * 8760 hr/yr * 1ton/2000 lb = 0.08 ton/yr

VOC - AP42

Per AP-42 Table 3.3-1, the emission factor of #2 Diesel Fuel is 0.00247 lb/hp-hr
Hourly VOC = 0.00247 lb/hp-hr * 26 bhp = 0.06 lb/hr
Yearly VOC= 0.06 lb/hr* 8760 hr/yr * 1 ton/2000 lb = 0.26 ton/yr

SOx - AP42

Per AP-42 Table 3.3-1, the emission factor of #2 Diesel Fuel is 0.00205 lb/hp-hr
Hourly SO2 = 0.00205 lb/hp-hr * 26 bhp = 0.05 lb/hr
Yearly SO2 = 0.05 lb/hr* 8760 hr/yr * 1ton/2000 lb = 0.23 ton/yr

Formaldehyde - AP42

Per AP-42 Table 3.3-2, the emission factor of #2 Diesel Fuel is 0.00118 lb/hp-hr
Hourly VOC = 0.00118 lb/hp-hr * 26 bhp = 0.03 lb/hr
Yearly formaldehyde = 0.03 lb/hr* 8760 hr/yr * 1ton/2000 lb = 0.13 ton/yr

Exhaust Emission Data Sheet
C20 D6
60 Hz Diesel Generator Set
EPA Emission

Engine Information:

Model:	Kubota V2203M	Bore:	3.43 in. (87 mm)
Type:	4 Cycle, In-line, 4 Cylinder Diesel	Stroke:	3.64 in. (92 mm)
Aspiration:	Naturally aspirated	Displacement:	134.1 cu. In. (2 liters)
Compression Ratio:	22:1		
Emission Control Device:			

	1/4	1/2	3/4	Full	Full
PERFORMANCE DATA	**Standby**	**Standby**	**Standby**	**Standby**	**Prime**
BHP @ 1800 RPM (60 Hz)	9	17	26	34	31
Fuel Consumption (gal/Hr)	0.6	1	1.5	1.9	1.8
Exhaust Gas Flow (CFM)	99	119	143	174	163
Exhaust Gas Temperature (°F)	359	519	722	970	882
EXHAUST EMISSION DATA					
HC (Total Unburned Hydrocarbons)	0.45	0.18	0.08	0.04	0.05
NOx (Oxides of Nitrogen as NO2)	6.2	4.4	3.4	2.2	2.7
CO (carbon Monoxide)	0.3	0.5	2.1	0.4	0.4
PM (Particular Matter)	0.25	0.11	0.11	0.36	0.25
SO2 (Sulfur Dioxide)					
Smoke (Bosch)	0	0	0.3	0.8	0.5

All values are Grams per HP-Hour

TEST CONDITIONS

Data is representative of steady-state engine speed (± 25 RPM) at designated genset loads. Pressures, temperatures, and emission rates were stabilized.

Fuel Specification:	ASTM D975 No. 2-D diesel fuel with 0.03-0.05% sulfur content (by weight), and 40-48 cetane number.
Fuel Temperature:	99 ± 9 °F (at fuel pump inlet)
Intake Air Temperature:	77 ± 9 °F
Barometric Pressure:	29.6 ± 1 in. Hg
Humidity:	NOx measurement corrected to 75 grains H2O/lb dry air
Reference Standard:	ISO 8178

The NOx, HC, CO and PM emission data tabulated here are representative of test data taken from a single engine under the test conditions shown above. Data for the other components are estimated. These data are subjected to instrumentation and engine-to-engine variability. Field emission test data are not guaranteed to these levels. Actual field test results may vary due to test site conditions, installation, fuel specification, test procedures and instrumentation. Engine operation with excessive air intake or exhaust restriction beyond published maximum limits, or with improper maintenance, may results in elevated emission levels.