October 5, 2016 Reference No. 082715

Ms. Beverly McKeone
Division of Air Quality
WV Department of Environmental Protection
601 57th Street, SE
Charleston, West Virginia 25304

Dear Ms. Beverly McKeone:

Re: General Permit Registration G70-C Modification Application
Yvonne Well Pad
Antero Resources Corporation

GHD Services Inc. (GHD) would like to submit this General Permit Modification application that we prepared on behalf of Antero Resources Corporation for an oil and gas facility identified as Yvonne Well Pad.

A General Permit Registration Modification is requested due to the following planned operational changes:

1. Increase in production.
2. Removal of (1) Abutec flare.
3. Removal of (11) 1.0 MMBtu/hr GPUs.
4. Addition of (4) condensate tanks.
5. Addition of (2) produced water tanks.
6. Addition of (11) 1.5 MMBtu/hr GPUs.
7. Addition of (11) line heaters.
8. Addition of (3) Cimarron enclosed combustors.
9. Addition of (2) HP VRU compressor engines.

Please refer to Table 14 in Attachment S - Emissions Calculations for the summary of changes in emissions of regulated air pollutants that will result from the above operational changes.

Enclosed are the following documents:

- Original copy of the G70-C General Permit Modification Application.
- Two CD copies of the G70-C General Permit Modification Application.
- The application fee with check no. 454527 in the amount of $1,500.00.

GHD Services Inc.
6320 Rothway Suite 100 Houston Texas 77040 USA
T 713 734 3090 **F** 713 734 3391 **W** www.ghd.com

REGISTERED COMPANY FOR
ISO 9001
ENGINEERING DESIGN

Please let us know if you have any questions or require additional information.

Sincerely,

GHD Services Inc.

Manuel Bautista

MB/ma/272

Encl.

cc: Barry Schatz, Antero Resources Corporation
Elizabeth McLaughlin, Antero Resources Corporation

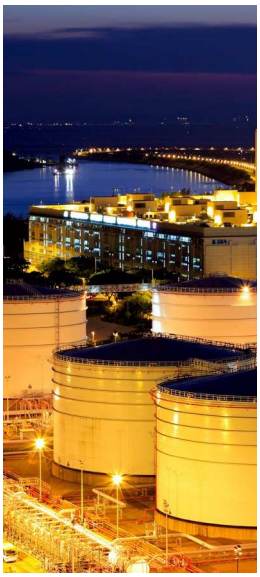
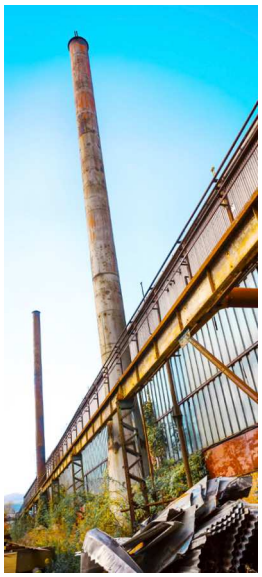

General Permit G70-C Modification Application

Increase in production, removal of (1) Abutec flare, (11) 1.0 MMBtu/hr GPUs, and the addition of (4) condensate tanks, (2) produced water tanks, (11) 1.5 MMBtu/hr GPUs, (11) line heaters, (3) Cimarron enclosed combustors, and (2) HP VRU compressor engines.

Yvonne Well Pad

Antero Resources Corporation

GHD | 6320 Rothway Suite 100 Houston Texas 77040
082715 | Report No 272 | October 2016

Table of Contents

G70-C General Permit Modification

Attachment A	Single Source Determination Form
Attachment B	Siting Criteria Waiver – Not Applicable
Attachment C	Current Business Certificate
Attachment D	Process Flow Diagram
Attachment E	Process Description
Attachment F	Plot Plan
Attachment G	Area Map
Attachment H	G70-C Section Applicability Form
Attachment I	Emission Units/ERD Table
Attachment J	Fugitive Emissions Summary Sheet
Attachment K	Gas Well Affected Facility Data Sheet
Attachment L	Storage Vessels Data Sheet
Attachment M	Natural Gas Fired Fuel Burning Units Data Sheet
Attachment N	Internal Combustion Engine Data Sheet
Attachment O	Tanker Truck Loading Data Sheet
Attachment P	Glycol Dehydration Unit Sheet – Not Applicable
Attachment Q	Pneumatic Controllers Data Sheet – Not Applicable
Attachment R	Air Pollution Control Device/ Emissions Reduction Devices Sheets
Attachment S	Emission Calculations
Attachment T	Facility-wide Emissions Summary Sheets
Attachment U	Class I Legal Advertisement

dep	**west virginia** department of environmental protection	Division of Air Quality 601 57th Street SE Charleston, WV 25304 Phone (304) 926-0475 Fax (304) 926-0479 www.dep.wv.gov

G70-C GENERAL PERMIT REGISTRATION APPLICATION

PREVENTION AND CONTROL OF AIR POLLUTION IN REGARD TO THE CONSTRUCTION, MODIFICATION, RELOCATION, ADMINISTRATIVE UPDATE AND OPERATION OF NATURAL GAS PRODUCTION FACILITIES LOCATED AT THE WELL SITE

☐CONSTRUCTION
☒MODIFICATION
☐RELOCATION

☐CLASS I ADMINISTRATIVE UPDATE
☐CLASS II ADMINISTRATIVE UPDATE

SECTION 1. GENERAL INFORMATION

Name of Applicant (as registered with the WV Secretary of State's Office): Antero Resources Corporation

Federal Employer ID No. (FEIN): 80-0162034

Applicant's Mailing Address: 1615 Wynkoop Street

City: Denver	State: CO	ZIP Code: 80202

Facility Name: Yvonne Well Pad

Operating Site Physical Address: 1199 Knights Fork Rd

City: West Union	Zip Code: 26456	County: Doddridge

Latitude & Longitude Coordinates (NAD83, Decimal Degrees to 5 digits):
Latitude: 39.34847
Longitude: -80.76965

SIC Code: 1311 NAICS Code: 211111	DAQ Facility ID No. (For existing facilities) 017-00140

CERTIFICATION OF INFORMATION

This G70-C General Permit Registration Application shall be signed below by a Responsible Official. A Responsible Official is a President, Vice President, Secretary, Treasurer, General Partner, General Manager, a member of the Board of Directors, or Owner, depending on business structure. A business may certify an Authorized Representative who shall have authority to bind the Corporation, Partnership, Limited Liability Company, Association, Joint Venture or Sole Proprietorship. Required records of daily throughput, hours of operation and maintenance, general correspondence, compliance certifications and all required notifications must be signed by a Responsible Official or an Authorized Representative. If a business wishes to certify an Authorized Representative, the official agreement below shall be checked off and the appropriate names and signatures entered. **Any administratively incomplete or improperly signed or unsigned G70-C Registration Application will be returned to the applicant. Furthermore, if the G70-C forms are not utilized, the application will be returned to the applicant. No substitution of forms is allowed.**

I hereby certify that Barry Schatz is an Authorized Representative and in that capacity shall represent the interest of the business (e.g., Corporation, Partnership, Limited Liability Company, Association Joint Venture or Sole Proprietorship) and may obligate and legally bind the business. If the business changes its Authorized Representative, a Responsible Official shall notify the Director of the Division of Air Quality immediately.

I hereby certify that all information contained in this G70-C General Permit Registration Application and any supporting documents appended hereto is, to the best of my knowledge, true, accurate and complete, and that all reasonable efforts have been made to provide the most comprehensive information possible.

Responsible Official Signature:_____
Name and Title: Phone: Fax:
Email: Date:

If applicable:
Authorized Representative Signature: Barry Schatz
Name and Title: Barry Schatz/ Senior Environmental & Regulatory Manager Phone: 303-357-7276 Fax: 303-357-7315
Email: bschatz@anteroresources.com Date: 10/5/16

If applicable:
Environmental Contact
Name and Title: Phone: Fax:
Email: Date:

OPERATING SITE INFORMATION	
Briefly describe the proposed new operation and/or any change(s) to the facility: Increase in production, removal of (1) Abutec flare, (11) 1.0 MMBtu/hr GPUs, and the addition of (4) condensate tanks, (2) produced water tanks, (11) 1.5 MMBtu/hr GPUs, (11) line heaters, (3) Cimarron enclosed combustors, and (2) HP VRU compressor engines.	
Directions to the facility: From West Union head north on Neely Ave toward Marie St/Old U.S. 50 E for 35 feet, turn right at the 1st cross street onto Marie St/Old U.S. 50 E for 0.2 mile, turn left onto Davis St for 0.2 mile, turn right onto WV-18 N/ Sistersville Pike for 5.1 miles, turn right onto Nutter Fork for 1.8 miles, and then turn left onto Wolf Pen Run/WV-22 for approximately 1.85 miles then take a sharp right onto WV-24 for 1 mile and then a right onto an unnamed road for 1 mile to the pad.	
ATTACHMENTS AND SUPPORTING DOCUMENTS	
I have enclosed the following required documents:	
Check payable to WVDEP – Division of Air Quality with the appropriate application fee (per 45CSR13 and 45CSR22). ☒ Check attached to front of application. ☐ I wish to pay by electronic transfer. Contact for payment (incl. name and email address): ☐ I wish to pay by credit card. Contact for payment (incl. name and email address): ☒$500 (Construction, Modification, and Relocation) ☐$300 (Class II Administrative Update) ☒$1,000 NSPS fee for 40 CFR60, Subpart IIII, JJJJ and/or OOOO [1] ☐$2,500 NESHAP fee for 40 CFR63, Subpart ZZZZ and/or HH [2] [1] Only one NSPS fee will apply. [2] Only one NESHAP fee will apply. The Subpart ZZZZ NESHAP fee will be waived for new engines that satisfy requirements by complying with NSPS, Subparts IIII and/or JJJJ. *NSPS and NESHAP fees apply to new construction or if the source is being modified.*	
☒ Responsible Official or Authorized Representative Signature (if applicable)	
☒ Single Source Determination Form **(must be completed in its entirety)** – Attachment A	
☐ Siting Criteria Waiver (if applicable) – Attachment B	☒ Current Business Certificate – Attachment C
☒ Process Flow Diagram – Attachment D	☒ Process Description – Attachment E
☒ Plot Plan – Attachment F	☒ Area Map – Attachment G
☒ G70-C Section Applicability Form – Attachment H	☒ Emission Units/ERD Table – Attachment I
☒ Fugitive Emissions Summary Sheet – Attachment J	
☒ Gas Well Affected Facility Data Sheet (if applicable) – Attachment K	
☒ Storage Vessel(s) Data Sheet (include gas sample data, USEPA Tanks, simulation software (e.g. ProMax, E&P Tanks, HYSYS, etc.), etc. where applicable) – Attachment L	
☒ Natural Gas Fired Fuel Burning Unit(s) Data Sheet (GPUs, Heater Treaters, In-Line Heaters if applicable) – Attachment M	
☒ Internal Combustion Engine Data Sheet(s) (include manufacturer performance data sheet(s) if applicable) – Attachment N	
☒ Tanker Truck Loading Data Sheet (if applicable) – Attachment O	
☐ Glycol Dehydration Unit Data Sheet(s) (include wet gas analysis, GRI- GLYCalc™ input and output reports and information on reboiler if applicable) – Attachment P	
☐ Pneumatic Controllers Data Sheet – Attachment Q	
☒ Air Pollution Control Device/Emission Reduction Device(s) Sheet(s) (include manufacturer performance data sheet(s) if applicable) – Attachment R	
☒ Emission Calculations (please be specific and include all calculation methodologies used) – Attachment S	
☒ Facility-wide Emission Summary Sheet(s) – Attachment T	
☒ Class I Legal Advertisement – Attachment U	
☒ One (1) paper copy and two (2) copies of CD or DVD with pdf copy of application and attachments	

GHD SERVICES INC.

▼ PLEASE DETACH AND RETAIN FOR YOUR RECORDS ▼

INVOICE NUMBER	DATE		VOUCHER NO.	AMOUNT
Account Number:		40WVDEPAQ	454527	
CR81216	8/12/2016	401018241		1,500.00

TOTAL: 1,500.00

THIS DOCUMENT IS PROTECTED BY A MICRO-PRINT SIGNATURE LINE, FLUORESCENT PAPER FIBERS, A WATERMARKED BACKER, AND IS REACTIVE TO CHEMICAL ALTERATION

GHD SERVICES INC.
2055 NIAGARA FALLS BLVD, SUITE 3
NIAGARA FALLS, NY 14304

M&T BANK
MANUFACTURERS AND TRADERS TRUST COMPANY
Commercial Banking
Main Office, Ithaca, NY 14850
50-7063-2213

8/12/2016

NO. 454527

PAY **********1,500 DOLLARS AND **********00 CENTS $**********1,500.00

TO THE ORDER OF

WEST VIRGINIA DEPT OF ENVIRONMENTAL
PROTECTION - DIVISION AIR QUALITY
601 57th Street SE
Charleston,, WV 25304 US

GHD SERVICES INC.

AUTHORIZED SIGNATURES

WARNING: THIS DOCUMENT IS VOID IF ACCOUNT NUMBER DOES NOT APPEAR ON THE REVERSE SIDE IN RED

⑈454527⑈ ⑆221370632⑆61000000118910⑈

Attachment R
AUTHORITY OF CORPORATION
OR OTHER BUSINESS ENTITY (DOMESTIC OR FOREIGN)

TO: The West Virginia Department of Environmental Protection, Division of Air Quality

DATE: January 23, 2015

ATTN.: Director

Corporation's / other business entity's Federal Employer I.D. Number 80-0162034

The undersigned hereby files with the West Virginia Department of Environmental Protection, Division of Air Quality, a permit application and hereby certifies that the said name is a trade name which is used in the conduct of an incorporated business or other business entity.

Further, the corporation or the business entity certifies as follows:

(1) Barry Schatz (is/are) the authorized representative(s) and in that capacity may represent the interest of the corporation or the business entity and may obligate and legally bind the corporation or the business entity.

(2) The corporation or the business entity is authorized to do business in the State of West Virginia.

(3) If the corporation or the business entity changes its authorized representative(s), the corporation or the business entity shall notify the Director of the West Virginia Department of Environmental Protection, Division of Air Quality, immediately upon such change.

President or Other Authorized Officer
(Vice President, Secretary, Treasurer or other official in charge of a principal business function of the corporation or the business entity)

(If not the President, then the corporation or the business entity must submit certified minutes or bylaws stating legal authority of other authorized officer to bind the corporation or the business entity).

Secretary

Name of Corporation or business entity

Attachment A
Single Source Determination Form

ATTACHMENT A - SINGLE SOURCE DETERMINATION FORM

Classifying multiple facilities as one "stationary source" under 45CSR13, 45CSR14, and 45CSR19 is based on the definition of Building, structure, facility, or installation as given in §45-14-2.13 and §45-19-2.12. The definition states:

"Building, Structure, Facility, or Installation" means all of the pollutant-emitting activities which belong to the same industrial grouping, are located on one or more contiguous or adjacent properties, and are under the control of the same person (or persons under common control). Pollutant-emitting activities are a part of the same industrial grouping if they belong to the same "Major Group" (i.e., which have the same two (2)-digit code) as described in the Standard Industrial Classification Manual, 1987 (United States Government Printing Office stock number GPO 1987 0-185-718:QL 3).

Is there a facility owned by or associated with the natural gas industry located within one (1) mile of the proposed facility? Yes ☒ No ☐

If Yes, please complete the questionnaire on the following page (Attachment A).

Please provide a source aggregation analysis for the proposed facility below:

The Yvonne Well Pad calculation of potential to emit included all the emissions sources that belong to the same industrial grouping, are located on contiguous or adjacent properties, and are under the control of the same person. The nearest emission source that belongs to the same industrial grouping and under the control of the same person but not located on contiguous or adjacent property is the Melody Well Pad. This operates independently and is approximately 0.79 mile northeast of the facility.

ATTACHMENT A - SINGLE SOURCE DETERMINATION FORM	
Answer each question with a detailed explanation to determine contiguous or adjacent properties which are under a common control and any support facilities. This section must be completed in its entirety.	
Provide a map of contiguous or adjacent facilities (production facilities, compressor stations, dehydration facilities, etc.) which are under common control and those facilities that are not under common control but are support facilities. Please indicate the SIC code, permit number (if applicable), and the distance between facilities in question on the map.	
Are the facilities owned by the same parent company or a subsidiary of the parent company? Provide the owners identity and the percentage of ownership of each facility. **Antero Resources has 100% ownership of each facility.**	Yes ☒ No ☐
Does an entity such as a corporation have decision making authority over the operation of a second entity through a contractual agreement or voting interest? Please explain.	Yes ☐ No ☒
Is there a contract for service relationship between the two (2) companies or, a support/dependency relationship that exists between the two (2) companies? Please explain.	Yes ☐ No ☒
Do the facilities share common workforces, plant managers, security forces, corporate executive officers or board executives?	Yes ☒ No ☐
Will managers or other workers frequently shuttle back and forth to be involved actively at both facilities?	Yes ☐ No ☒
Do the facilities share common payroll activities, employee benefits, health plans, retirement funds, insurance coverage, or other administrative functions? Please explain.	Yes ☐ No ☒
Does one (1) facility operation support the operation of the other facility?	Yes ☐ No ☒
Is one (1) facility dependent on the other? If one (1) facility shuts down, what are the limitations on the other to pursue outside business? Please explain. **No, these facilities operate completely independently.**	Yes ☐ No ☒
Are there any financial arrangements between the two (2) entities?	Yes ☐ No ☒
Are there any legal or lease agreements between the two (2) facilities?	Yes ☐ No ☒
Do the facilities share products, byproducts, equipment, or other manufacturing or air pollution control device equipment? Please explain. **No, these facilities operate completely independently.**	Yes ☐ No ☒
Do all the pollutant-emitting activities at the facilities belong to the same SIC Code? Please provide the SIC Codes. **1311**	Yes ☒ No ☐
Was the location of the new facility chosen primarily because of its proximity to the existing facility to integrate the operation of the two (2) facilities? Please explain. **No, these facilities operate completely independently.**	Yes ☐ No ☒
Will materials be routinely transferred between the two (2) facilities? Please explain the amount of transfer and how often the transfers take place and what percentages go to the various entities.	Yes ☐ No ☒
Does the facility influence production levels or compliance with environmental regulations at other facilities? Who accepts the responsibility for compliance with air quality requirements? Please explain. **No, these facilities operate completely independently.**	Yes ☐ No ☒

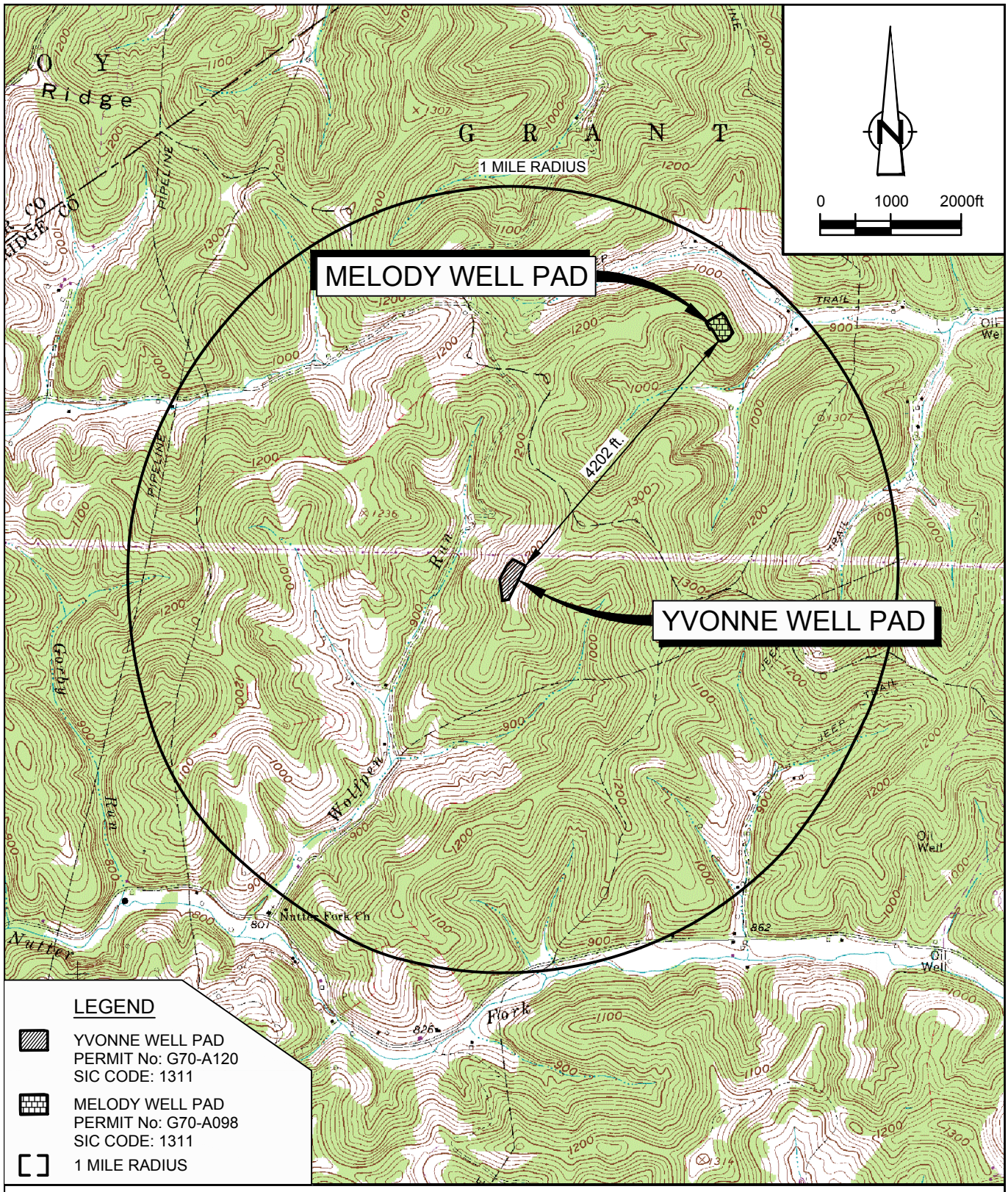

SOURCE: USGS QUADRANGLE MAPS;
SMITHBURG AND WEST UNION, WEST VIRGINIA

SITE COORDINATES: LAT. 39.348478, LONG. -80.76965

Attachment A

SINGLE SOURCE DETERMINATION
YVONNE WELL PAD
ANTERO RESOURCES
Doddridge County, West Virginia

82715-00(272)GN-WA004 AUG 30, 2016

Attachment B
Siting Criteria Waiver

Attachment B

Siting Waiver
Yvonne Well Pad
Antero Resources Corporation
Doddridge County, West Virginia

A Siting Waiver form is not required because there are no occupied dwelling structures within 300 feet of Yvonne Well Pad.

Attachment C
Current Business Certificate

State of West Virginia

Certificate

I, Natalie E. Tennant, Secretary of State of the State of West Virginia, hereby certify that

ANTERO RESOURCES CORPORATION

a corporation formed under the laws of Delaware, which is authorized to transact business in West Virginia by a Certificate of Authority has filed in my office as required by the provisions of the West Virginia Code, a copy of an amendment to its Articles of Incorporation authenticated by the proper office of the state or country of its incorporation and was found to conform to law.

Therefore, I issue this

CERTIFICATE OF AMENDMENT TO CERTIFICATE OF AUTHORITY

Given under my hand and the Great Seal of the State of West Virginia on this day of June 10, 2013

Natalie E Tennant

Secretary of State

FILED

JUN 10 2013

IN THE OFFICE OF SECRETARY OF STATE

Natalie E. Tennant
Secretary of State
1900 Kanawha Blvd E
Bldg 1, Suite 157-K
Charleston, WV 25305

Penney Barker, Manager
Corporations Division
Tel: (304)558-8000
Fax: (304)558-8381
Website: www.wvsos.com
E-mail: business@wvsos.com

Office Hours: Monday – Friday
8:30 a.m. – 5:00 p.m. ET

FILE ONE ORIGINAL
(Two if you want a filed stamped copy returned to you)
FEE: $25.00

APPLICATION FOR AMENDED CERTIFICATE OF AUTHORITY

****** In accordance with the provisions of the West Virginia Code, the undersigned corporation hereby **** applies for an Amended Certificate of Authority and submits the following statement:**

1. Name under which the corporation was authorized to transact business in WV: Antero Resources Appalachian Corporation
2. Date Certificate of Authority was issued in West Virginia: 6/25/2008
3. Corporate name has been changed to: Antero Resources Corporation
   (Attach one Certified Copy of Name Change as filed in home State of incorporation.)
4. Name the corporation elects to use in WV: Antero Resources Corporation
   (due to home state name not being available)
5. Other amendments:
   (attach additional pages if necessary)

6. **Name and phone number of contact person.** (This is optional, however, if there is a problem with the filing, listing a contact person and phone number may avoid having to return or reject the document.)

   Alvyn A. Schopp — Contact Name
   (303) 357-7310 — Phone Number

7. **Signature information** (See below **Important Legal Notice Regarding Signature*):

   Print Name of Signer: Alvyn A. Schopp Title/Capacity: Authorized Person

   Signature: Date: June 10, 2013

Important Legal Notice Regarding Signature*: **Per West Virginia Code §31D-1-129. Penalty for signing false document. Any person who signs a document he or she knows is false in any material respect and knows that the document is to be delivered to the secretary of state for filing is guilty of a misdemeanor and, upon conviction thereof, shall be fined not more than one thousand dollars or confined in the county or regional jail not more than one year, or both.

WV032 - 04/16/2013 Wolters Kluwer Ordine

Delaware

The First State

I, JEFFREY W. BULLOCK, SECRETARY OF STATE OF THE STATE OF DELAWARE, DO HEREBY CERTIFY THE ATTACHED IS A TRUE AND CORRECT COPY OF THE CERTIFICATE OF AMENDMENT OF "ANTERO RESOURCES APPALACHIAN CORPORATION", CHANGING ITS NAME FROM "ANTERO RESOURCES APPALACHIAN CORPORATION" TO "ANTERO RESOURCES CORPORATION", FILED IN THIS OFFICE ON THE TENTH DAY OF JUNE, A.D. 2013, AT 9:37 O'CLOCK A.M.

A FILED COPY OF THIS CERTIFICATE HAS BEEN FORWARDED TO THE NEW CASTLE COUNTY RECORDER OF DEEDS.

Jeffrey W. Bullock, Secretary of State

4520810 8100

AUTHENTICATION: 0496546

130754186

DATE: 06-10-13

You may verify this certificate online at corp.delaware.gov/authver.shtml

State of Delaware
Secretary of State
Division of Corporations
Delivered 09:37 AM 06/10/2013
FILED 09:37 AM 06/10/2013
SRV 130754186 - 4520810 FILE

AMENDMENT TO THE AMENDED AND RESTATED CERTIFICATE OF INCORPORATION OF ANTERO RESOURCES APPALACHIAN CORPORATION

Antero Resources Appalachian Corporation (the "Corporation"), a corporation organized and existing under the laws of the State of Delaware, hereby certifies as follows:

1. The original Certificate of Incorporation of the Corporation was filed under the name Antero Resources Barnett Corporation with the filing of the original Certificate of Incorporation of the Corporation with the Secretary of State of the State of Delaware on March 18, 2008.

2. This Amendment to the Amended and Restated Certificate of Incorporation has been duly adopted and approved in accordance with Sections 242 of the General Corporation Law of the State of Delaware.

3. Article FIRST of the Amended and Restated Certificate of Incorporation is hereby amended to read in its entirety as follows:

FIRST. The name of the Corporation is Antero Resources Corporation.

IN WITNESS WHEREOF, the Corporation has caused this Certificate of Amendment to be executed by its duly authorized officer on the 10th day of June, 2013.

ANTERO RESOURCES APPALACHIAN CORPORATION

By: _____
Name: Alvyn A. Schopp
Title: Vice President of Accounting & Administration / Treasurer

Attachment D
Process Flow Diagram

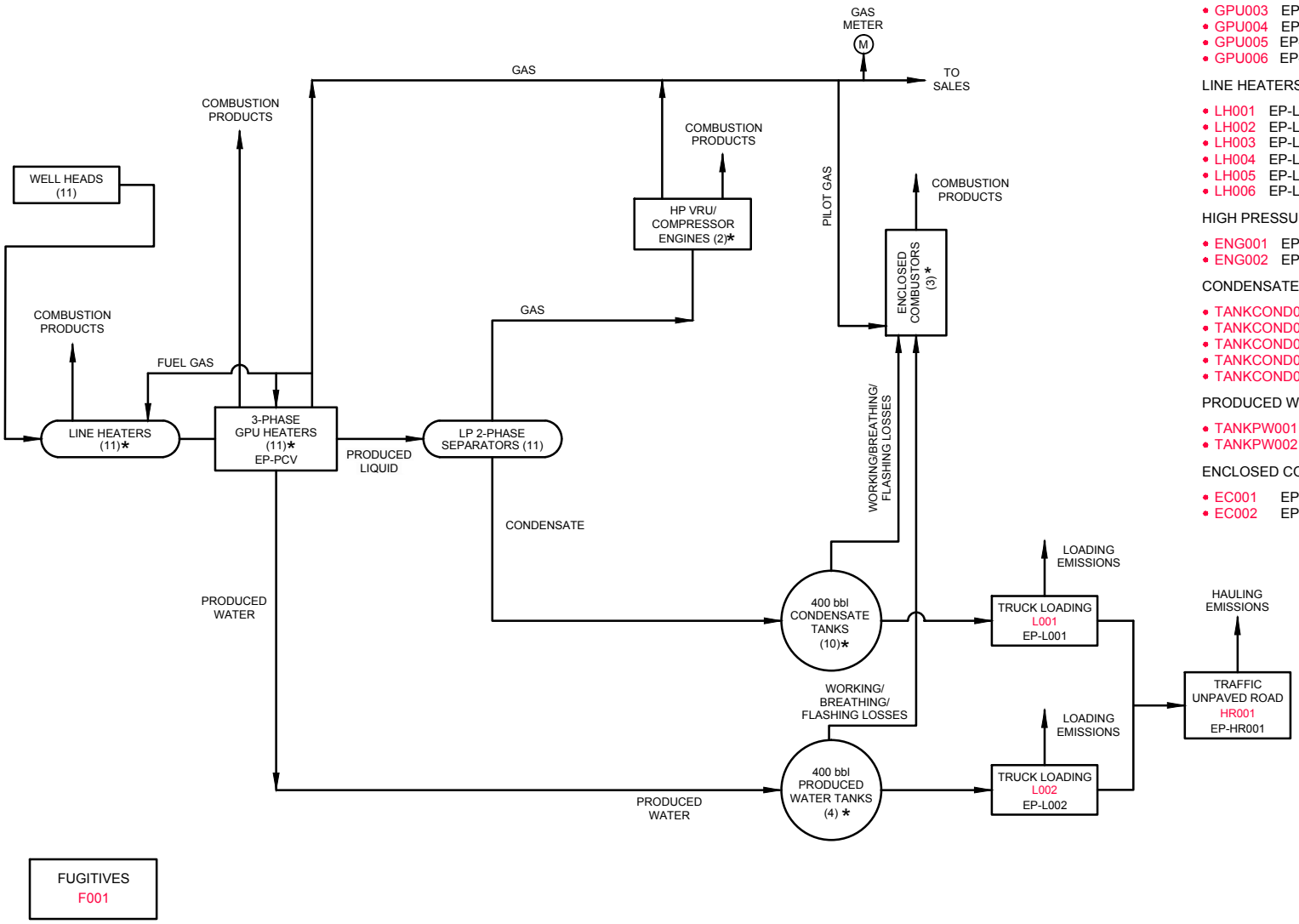

* 3-PHASE GPU HEATERS (11)

- GPU001 EP-GPU001
- GPU002 EP-GPU002
- GPU003 EP-GPU003
- GPU004 EP-GPU004
- GPU005 EP-GPU005
- GPU006 EP-GPU006
- GPU007 EP-GPU007
- GPU008 EP-GPU008
- GPU009 EP-GPU009
- GPU010 EP-GPU010
- GPU011 EP-GPU011

LINE HEATERS (11)

- LH001 EP-LH001
- LH002 EP-LH002
- LH003 EP-LH003
- LH004 EP-LH004
- LH005 EP-LH005
- LH006 EP-LH006
- LH007 EP-LH007
- LH008 EP-LH008
- LH009 EP-LH009
- LH010 EP-LH010
- LH011 EP-LH011

HIGH PRESSURE VRU/ COMPRESSOR ENGINES (2)

- ENG001 EP-ENG001
- ENG002 EP-ENG002

CONDENSATE TANKS (10)

- TANKCOND001
- TANKCOND002
- TANKCOND003
- TANKCOND004
- TANKCOND005
- TANKCOND006
- TANKCOND007
- TANKCOND008
- TANKCOND009
- TANKCOND010

PRODUCED WATER TANKS (4)

- TANKPW001
- TANKPW002
- TANKPW003
- TANKPW004

ENCLOSED COMBUSTORS (3)

- EC001 EP-EC001
- EC002 EP-EC002
- EC003 EP-EC003

Attachment D

PROCESS FLOW DIAGRAM - ANTERO RESOURCES YVONNE WELL PAD

Doddridge County, West Virginia

82715-00(272)GN-WA001 AUG 23, 2016

Attachment E
Process Description

Attachment E

Process Description
Yvonne Well Pad
Antero Resources Corporation
Doddridge County, West Virginia

A mixture of condensate, water, and entrained gas from the condensate and gas wells enters the facility through a series of line heaters (LH001-011) and gas production units (GPU001-GPU011) which are 3-phase separators where the gas, condensate, and produced water are separated. The line heaters and GPUs are fueled by a slip stream of the separated gas.

The gas from the three phase separators is metered and sent to the sales gas pipeline. The water flow to the produced water storage tanks (TANKPW001-004). The condensate is then sent to two phase low pressure separators where gas is separated. The gas is routed to the high pressure VRU driven by gas fueled engines (ENG001-002), compressed, metered and sent to the sales gas line. The condensate from the two phase separators then flows to the condensate storage tanks (TANKSCOND001-010). The line heaters are only used during the first several months from start of production and will be removed once production has normalized.

The facility has ten (10) tanks (TANKCOND001-010) on site to store condensate and four (4) tanks (TANKPW001-004) to store produced water prior to removal from the site. The flashing, working and breathing losses from the tanks are routed to three enclosed combustors (EC001-003) to control the emissions. The enclosed combustors that will be used to control emissions are designed to achieve a VOC destruction efficiency of 98 percent.

Condensate and produced water are transported off site on an as needed basis via tanker truck. Truck loading connections are in place to pump condensate (L001) and produced water (L002) from the storage tanks into tanker trucks. Emissions from the loading operations are vented to the atmosphere.

Emissions from the facility's emission sources were calculated using the extended condensate analysis from Gaskin Unit 1H in Hamilton Well Pad and gas analysis from Deano Unit 2H in Misery Well Pad. The extended condensate analysis is considered representative of the materials from Yvonne Well Pad, being in the same Marcellus rock formation.

Attachment F
Plot Plan

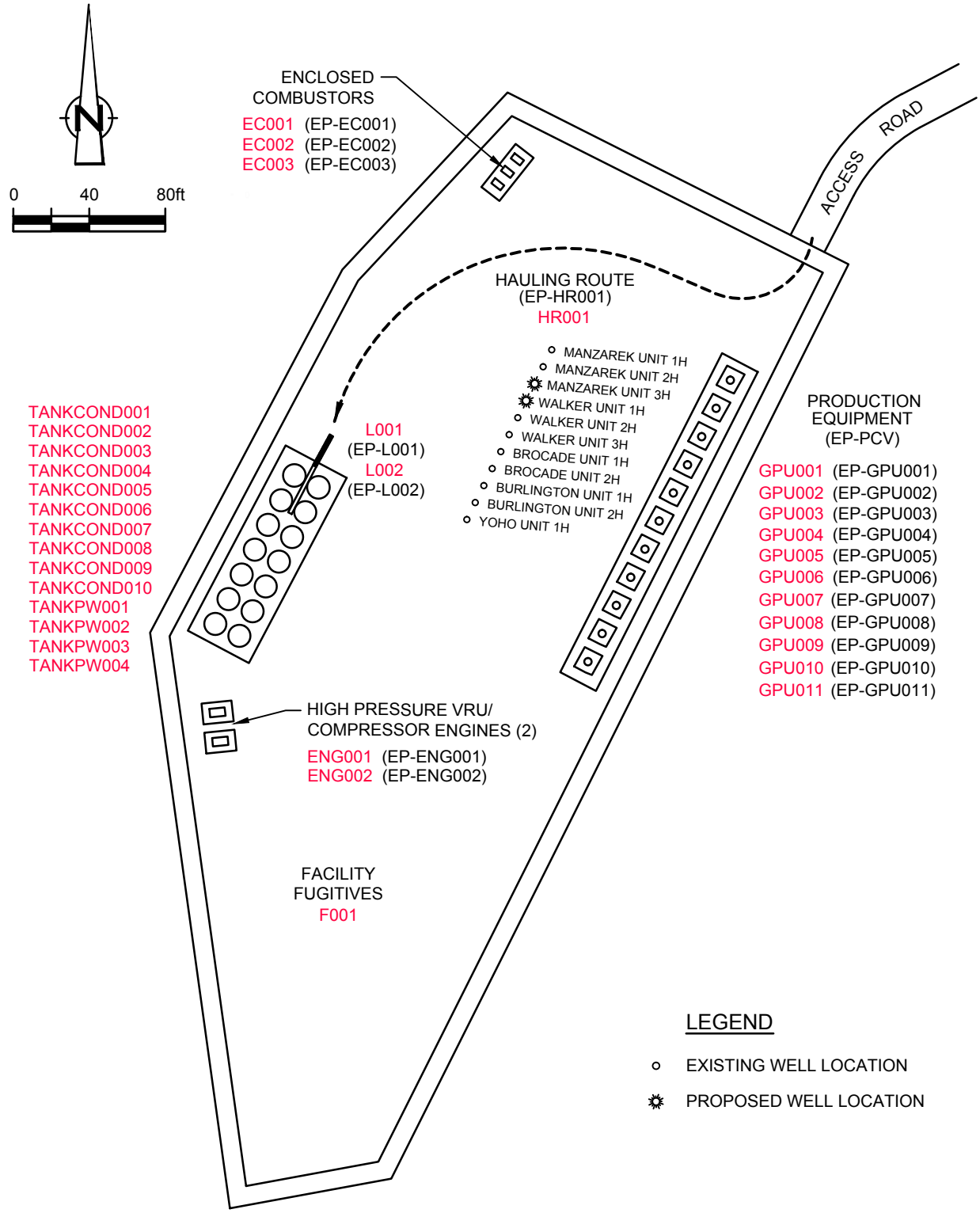

Attachment F

PLOT PLAN
YVONNE WELL PAD
ANTERO RESOURCES
Doddridge County, West Virginia

82715-00(272)GN-WA002 AUG 23, 2016

Attachment G
Area Map

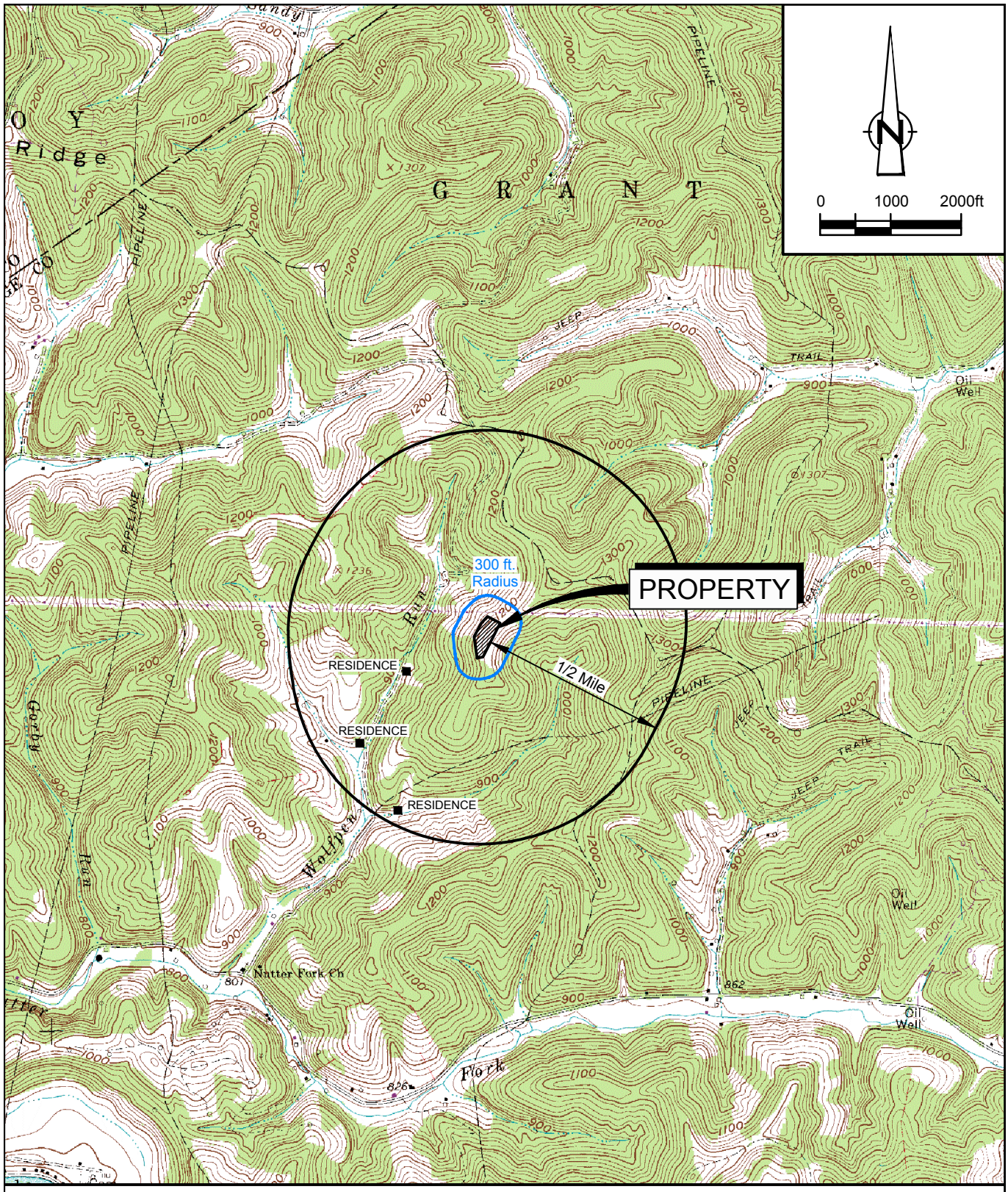

SOURCE: USGS QUADRANGLE MAPS;
SMITHBURG AND WEST UNION, WEST VIRGINIA

SITE COORDINATES: LAT. 39.348478, LONG. -80.76965
SITE ELEVATION: 1227 ft AMSL

Attachment G

AREA MAP
YVONNE WELL PAD
ANTERO RESOURCES
Doddridge County, West Virginia

82715-00(272)GN-WA003 AUG 23, 2016

Attachment H
G70-C Section Applicability Form

General Permit G70-C Registration
Section Applicability Form

General Permit G70-C was developed to allow qualified applicants to seek registration for a variety of sources. These sources include gas well affected facilities, storage vessels, gas production units, in-line heaters, heater treaters, glycol dehydration units and associated reboilers, pneumatic controllers, centrifugal compressors, reciprocating compressors, reciprocating internal combustion engines (RICEs), tank truck loading, fugitive emissions, completion combustion devices, flares, enclosed combustion devices, and vapor recovery systems. All registered facilities will be subject to Sections 1.0, 2.0, 3.0, and 4.0.

General Permit G70-C allows the registrant to choose which sections of the permit they are seeking registration under. Therefore, please mark which additional sections that you are applying for registration under. If the applicant is seeking registration under multiple sections, please select all that apply. Please keep in mind, that if this registration is approved, the issued registration will state which sections will apply to your affected facility.

GENERAL PERMIT G70-C APPLICABLE SECTIONS	
☒Section 5.0	Gas Well Affected Facility (NSPS, Subpart OOOO)
☒Section 6.0	Storage Vessels Containing Condensate and/or Produced Water[1]
☐Section 7.0	Storage Vessel Affected Facility (NSPS, Subpart OOOO)
☒Section 8.0	Control Devices and Emission Reduction Devices not subject to NSPS Subpart OOOO and/or NESHAP Subpart HH
☒Section 9.0	Small Heaters and Reboilers not subject to 40CFR60 Subpart Dc
☐Section 10.0	Pneumatic Controllers Affected Facility (NSPS, Subpart OOOO)
☐Section 11.0	Centrifugal Compressor Affected Facility (NSPS, Subpart OOOO)[2]
☐Section 12.0	Reciprocating Compressor Affected Facility (NSPS, Subpart OOOO)[2]
☒Section 13.0	Reciprocating Internal Combustion Engines, Generator Engines, Microturbines
☒Section 14.0	Tanker Truck Loading[3]
☐Section 15.0	Glycol Dehydration Units[4]

1 *Applicants that are subject to Section 6 may also be subject to Section 7 if the applicant is subject to the NSPS, Subpart OOOO control requirements or the applicable control device requirements of Section 8.*

2 *Applicants that are subject to Section 11 and 12 may also be subject to the applicable RICE requirements of Section 13.*

3 *Applicants that are subject to Section 14 may also be subject to control device and emission reduction device requirements of Section 8.*

4 *Applicants that are subject to Section 15 may also be subject to the requirements of Section 9 (reboilers). Applicants that are subject to Section 15 may also be subject to control device and emission reduction device requirements of Section 8.*

Attachment I
Emission Units/ ERD Table

ATTACHMENT I – EMISSION UNITS / EMISSION REDUCTION DEVICES (ERD) TABLE

Include ALL emission units and air pollution control devices /ERDs that will be part of this permit application review. This information is required for all sources regardless of whether it is a construction, modification, or administrative update.

Emission Unit ID	Emission Point ID	Emission Unit Description	Year Installed/ Modified	Manufac. Date	Design Capacity	Type and Date of Change	Control Device(s)	ERD (s)
GPU001 through GPU0011	EP-GPU001 through EP-GPU0011	Gas Production Unit Heater	2017		1.5 MMBtu/hr per GPU	New	N/A	
H001 through H011	EP-H001 through EP-H011	Gas Production Unit Heater	2016		1.0 MMBtu/hr per GPU	Removal	N/A	
LH001 through LH0011	EP-LH001 through EP-LH0011	Line Heater	2017		2.0 MMBtu/hr per Line Heater	New	N/A	
F001	F001	Fugitives	2016		N/A	Existing	N/A	
TANKCOND001-006	EP-EC001, EP-EC002, EP-EC003	Condensate Tank F/W/B	2016		400 bbl each	Modification[1]	EC001, EC002, EC003	
TANKCOND007-010	EP-EC001, EP-EC002, EP-EC003	Condensate Tank F/W/B	2017		400 bbl each	New	EC001, EC002, EC003	
TANKPW001-002	EP-EC001, EP-EC002, EP-EC003	PW Tank F/W/B	2016		400 bbl each	Modification[1]	EC001, EC002, EC003	
TANKPW003-004	EP-EC001, EP-EC002, EP-EC003	PW Tank F/W/B	2017		400 bbl each	New	EC001, EC002, EC003	
L001	EP-L001	Loading (Condensate)	2016		10080 gal/hr 9427950 gal/yr	Modification[2]	N/A	
L002	EP-L002	Loading (Produced Water)	2016		10080 gal/hr 7358400 gal/yr	Modification[3]	N/A	
HR001	EP-HR001	Haul Truck	2016		Tanker Trucks Condensate: 1123 trips per year Tanker Trucks PW: 876 trips per year Pick Up Truck: 730 trips per year	Modification[4]	N/A	
FL001	EP-FL001	Flare	2016		18.4 MMBtu/hr	Removal	N/A	
EC001	EP-EC001	Enclosed Combustor	2017		12 MMBtu/hr	New	N/A	
EC002	EP-EC002	Enclosed Combustor	2017		12 MMBtu/hr	New	N/A	
EC003	EP-EC003	Enclosed Combustor	2017		12 MMBtu/hr	New	N/A	
PCV	EP-PCV	Pneumatic CV	2016		6.6 scf/day/PCV	Existing	N/A	
ENG001 through ENG002	EP-ENG001 through EP-ENG002	High Pressure VRU Compressor Engine	2017	2015	76 HP per Engine	New	Non-Selective Catalytic Reduction	

Notes:
1. This is not a physical modification. Change in emissions due to increase in condensate throughput.
2. This is not a physical modification. Increase in emissions due to increase in loading throughput.
3. This is not a physical modification. Decrease in emissions due to decrease in loading throughput.
4. This is not a physical modification. Change in emissions from decreased number of trips.

1 For Emission Units (or Sources) use the following numbering system: 1S, 2S, 3S, ... or other appropriate designation.
2 For Emission Points use the following numbering system: 1E, 2E, 3E, ... or other appropriate designation.
3 When required by rule.
4 New, modification, removal, existing.
5 For Control Devices use the following numbering system: 1C, 2C, 3C, ... or other appropriate designation.
6 For ERDs use the following numbering system: 1D, 2D, 3D, ... or other appropriate designation.

Attachment J
Fugitive Emissions Summary Sheet

ATTACHMENT J – FUGITIVE EMISSIONS SUMMARY SHEET

Sources of fugitive emissions may include loading operations, equipment leaks, blowdown emissions , etc.
Use extra pages for each associated source or equipment if necessary.

Source/Equipment:

Leak Detection Method Used	☐ Audible, visual, and	☑ Infrared (FLIR) cameras	☐ Other (please describe)	☐ None required

Component Type	Closed Vent System	Count	Source of Leak Factors (EPA, other (specify))	Stream type (gas, liquid, etc.)	Estimated Emissions (tpy)		
					VOC	HAP	GHG (CO2e)
Valves	☐ Yes ☑ No	550	EPA	gas	2.81	0.24	399.30
Valves	☐ Yes ☑ No	572	EPA	liquid	13.46	1.09	2.73
Connections (Not sampling)	☐ Yes ☑ No	649	EPA	gas	0.15	1.27E-02	20.94
Flanges	☐ Yes ☑ No	143	EPA	gas	0.06	5.47E-03	9.00
Loading	☐ Yes ☑ No	2	EPA	gas	6.01	4.27E-02	5.85

1 Other equipment types may include compressor seals, relief valves, diaphragms, drains, meters, etc.

Please provide an explanation of the sources of fugitive emissions (e. g. pigging operations, equipment blowdowns, pneumatic controllers, etc.).

Please indicate if there are any closed vent bypasses (include component).

Specify all equipment used in the closed vent system (e. g. VRU, ERD, thief hatches, tanker truck loading, etc.).

Attachment K
Gas Well Affected Facility Data Sheet

ATTACHMENT K – GAS WELL AFFECTED FACILITY DATA SHEET			
Complete this data sheet if you are the owner or operator of a gas well affected facility for which construction, modification or reconstruction commenced after August 23, 2011. This form must be completed for natural gas well affected facilities regardless of when flowback operations occur (or have occurred).			
API Number	**Date of Flowback**	**Date of Well Completion**	**Green Completion and/or Combustion Device**
47-017-06697-00	7/28/2017	2/11/2017	Green
47-017-06698-00	7/28/2017	2/11/2017	Green
47-017-06629-00	7/28/2017	2/11/2017	Green
47-017-06630-00	7/28/2017	2/11/2017	Green
47-017-06543-00	7/28/2017	2/11/2017	Green
47-017-06531-00	7/28/2017	2/11/2017	Green
47-017-06532-00	7/28/2017	2/11/2017	Green
4 wells not permitted.			

Note: If future wells are planned and no API number is available please list as PLANNED.
If there are existing wells that commenced construction prior to August 23, 2011, please acknowledge as existing.

This is the same API (American Petroleum Institute) well number(s) provided in the well completion notification and as provided to the WVDEP, Office of Oil and Gas for the well permit. The API number may be provided on the application without the state code (047).

Every oil and gas well permitted in West Virginia since 1929 has been issued an API number. This API is used by agencies to identify and track oil and gas wells.

The API number has the following format: 047-001-00001

Where,

047 =	*State code. The state code for WV is 047.*
001 =	*County Code. County codes are odd numbers, beginning with 001 (Barbour) and continuing to 109 (Wyoming).*
00001=	*Well number. Each well will have a unique well number.*

Attachment L
Storage Vessel Data Sheet

ATTACHMENT L – STORAGE VESSEL DATA SHEET

Complete this data sheet if you are the owner or operator of a storage vessel that contains condensate and/or produced water. This form must be completed for each new or modified bulk liquid storage vessel(s) that contains condensate and/or produced water . (If you have more than one (1) identical tank (i.e. 4-400 bbl condensate tanks), then you can list all on one (1) data sheet). **Include gas sample analysis, flashing emissions, working and breathing losses, USEPA Tanks, simulation software (ProMax, E&P Tanks, HYSYS, etc.), and any other supporting documents where applicable.**

The following information is REQUIRED:

☐ Composition of the representative sample used for the simulation
☐ For each stream that contributes to flashing emissions:
- ☐ Temperature and pressure (inlet and outlet from separator(s))
- ☐ Simulation-predicted composition
- ☐ Molecular weight
- ☐ Flow rate

☐ Resulting flash emission factor or flashing emissions from simulation
☐ Working/breathing loss emissions from tanks and/or loading emissions if simulation is used to quantify those emissions

Additional information may be requested if necessary.

GENERAL INFORMATION (REQUIRED)

1. Bulk Storage Area Name Tanks	2. Tank Name: Condensate Tank 001-010
3. Emission Unit ID number: TANKCOND001-010	4. Emission Point ID number. EP-EC001, EP-EC002, EP-EC003
5. Date Installed , Modified or Relocated (for existing tanks)	6. Type of change:
TANK001-006 - 2016; TANK007-010 - 2017 Was the tank manufactured after August 23, 2011? ☑ Yes ☐ No	☑ New construction ☐ New stored material ☐ Other ☐ Relocation

7A. Description of Tank Modification (if applicable)

7B. Will more than one material be stored in this tank? If so, a separate form must be completed for each material.
☐ Yes ☑ No

7C. Was USEPA Tanks simulation software utilized?

☐ Yes ☑ No

If Yes, please provide the appropriate documentation and items 8-42 below are not required.

TANK INFORMATION

8. Design Capacity (specify barrels or gallons). Use the internal cross-sectional area multiplied by internal height. 400bbls

9A. Tank Internal Diameter (ft): 12	9B. Tank Internal Height (or Length) (ft): 20
10A. Maximum Liquid Height (ft): 18	10B. Average Liquid Height (ft): 10
11A. Maximum Vapor Space Height (ft): 18	11B. Average Vapor Space Height (ft): 10

12. Nominal Capacity (specify barrels or gallons). This is also known as "working volume" and considers design liquid levels and overflow valve heights.: 400bbls

13A. Maximum annual throughput (gal/yr): 9427950	13B. Maximum daily throughput (gal/day): 25830
14. Number of Turnovers per year (annual net throughput/maximum tank liquid volume): 57	15. Maximum tank fill rate (gal/min) 168

16. Tank fill method ☐ Submerged ☑ Splash ☐ Bottom Loading

17. Is the tank system a variable vapor space system? ☐ Yes ☑ No

If yes, (A) What is the volume expansion capacity of the system (gal)?
(B) What are the number of transfers into the system per year?

18. Type of tank (check all that apply):

☑ Fixed Roof ☑ vertical ☐ horizontal ☑ flat roof ☐ cone roof ☐ dome roof ☐ other (describe)

☐ External Floating Roof ☐ pontoon roof ☐ double deck roof

☐ Domed External (or Covered) Floating Roof

☐ Internal Floating Roof ☐ vertical column support ☐ self-supporting

☐ Variable Vapor Space ☐ lifter roof ☐ diaphragm

☐ Pressurized ☐ spherical ☐ cylindrical

☐ other

ATTACHMENT L – STORAGE VESSEL DATA SHEET

PRESSURE/VACUUM CONTROL DATA

19. Check as many as apply:

- ☐ Does Not Apply
- ☐ Inert Gas Blanket of
- ☑ Vent to Vapor Combustion Device (vapor combustors, flares, thermal oxidizers, enclosed combustors)
- ☐ Conservation Vent (psig)
  - Vacuum Pressure
- ☐ Emergency relief Valve (psig)
  - Vacuum Pressure
- ☐ Thief Hatch Weighted ☐ Yes ☐ No

Complete appropriate Air Pollution Control Device Sheet

20. Expected Emission Rate (submit Test Data or Calculations here or elsewhere in the application).

Material Name	Flashing Loss		Breathing Loss		Working Loss		Total Emission Loss		[1]Estimation Method
	lb/hr	tpy	lb/hr	tpy	lb/hr	tpy	lb/hr	tpy	
Please see Table 6 and Table 7									

TANK CONSTRUCTION & OPERATION INFORMATION

21. Tank Shell Construction:
☐ Riveted ☐ Gunite lined ☐ Epoxy-coated ☑ Other (describe): Steel

21A. Shell Color: Green	21B. Roof Color: Green	21C. Year Last Painted TANK001-006 - 2016; TANK007-010 - 2017

22. Shell Condition (if metal and unlined):
☑ No Rust ☐ Light Rust ☐ Dense Rust ☐ Not applicable

22A. Is the tank heated? ☐ Yes ☑ No	22B. If yes, operating temperature:	22C. If yes, how is heat provided to tank?

23. Operating Pressure Range (psig): 0 psig, atmospheric
Must be listed for tanks using VRUs with closed vent system

24. Is the tank a Vertical Fixed Roof Tank? ☑ Yes ☐ No	24A. If yes, for dome roof provide radius (ft): NA	24B. If yes, for cone roof, provide slop (ft/ft): NA

25. Complete the following section for **Floating Roof Tanks** Does Not Apply

25A. Year Internal Floaters Installed:

25B. Primary Seal Type: ☐ Metallic (mechanical) shoe seal ☐ Liquid mounted resilient seal ☐ Vapor mounted resilient seal ☐ Other (describe):

25C. Is the Floating Roof equipped with a Secondary Seal? ☐ Yes ☐ No

25D. If YES, how is the secondary seal mounted? (check one)
☐ Shoe ☐ Rim ☐ Other (describe)

25E. Is the Floating Roof equipped with a weather shield? ☐ Yes ☐ No

25F. Describe deck fittings

26. Complete the following section for Internal Floating Roof Tanks ☑ Does not apply

26A. Deck Type: ☐ Bolted ☐ Welded	26B. For bolted decks, provide deck construction

26C. Deck seam:
☐ 5 ft. wide ☐ 6 ft. wide ☐ 7 ft. wide ☐ 5 x 7.5 ft wide ☐ 5 x 12 ft wide ☐ Other (describe)

26D. Deck seam length (ft)	26E. Area of deck (ft^2)	26F. For column supported tanks: Number of columns:	26G. For column supported tanks, Diameter of each column:

27. Closed Vent System with VRU ☐ Yes ☑ No

28. Closed Vent System with Enclosed Combustor? ☑ Yes ☐ No

ATTACHMENT L – STORAGE VESSEL DATA SHEET

SITE INFORMATION

29. Provide the city and state on which the data in this section are based.: Charleston, WV

30. Daily Average Ambient Temperature (°F): 65.08	31. Annual Average Maximum Temperature (°F): 75.94
32. Annual Average Minimum Temperature (°F): 46.56	33. Average Wind Speed (miles/hr): 18.5mph
34. Annual Average Solar Insulation Factor (BTU/(ft$_2$·day)) 1030.236	35. Atmospheric Pressure (psia): 14.8 (based off local conditions, could not find annual)

LIQUID INFORMATION

36. Average daily temperature range of bulk liquid (F):	65.08	36A. Minimum (°F):	46.56	36B. Maximum (°F)	75.94
37. Average operating pressure range of tank (psig):	0	37A. Minimum (psig)	0	37B. Maximum (psig)	0

38A. Minimum Liquid Surface Temperature (°F)	46.56	38B. Corresponding Vapor Pressure (psia)	2.90
39A. Average Liquid Surface Temperature (°F)	65.08	39B. Corresponding Vapor Pressure (psia)	4.13
40A. Maximum Liquid Surface Temperature (°F)	75.94	40B. Corresponding Vapor Pressure (psia)	5.03

41. Provide the following for each liquid or gas to be stored in tank. Add additional pages if necessary.

41A. Material Name or Composition	Condensate		
41B. CAS Number	mix of HC		
41C. Liquid Density (lb/gal)	5.9300		
41D. Liquid Molecular Weight (lb/lb-mole)	106.50		
41E. Vapor Molecular Weight (lb/lb-mole)	38.7987		
Maximum Vapor Pressure 41F. True (psia)	5.0290		
41G. Reid (psia)	6.0900		
Months Storage per Year 41H. From - To	year round		

ATTACHMENT L – STORAGE VESSEL DATA SHEET

Complete this data sheet if you are the owner or operator of a storage vessel that contains condensate and/or produced water. This form must be completed for each new or modified bulk liquid storage vessel(s) that contains condensate and/or produced water . (If you have more than one (1) identical tank (i.e. 4-400 bbl condensate tanks), then you can list all on one (1) data sheet). **Include gas sample analysis, flashing emissions, working and breathing losses, USEPA Tanks, simulation software (ProMax, E&P Tanks, HYSYS, etc.), and any other supporting documents where applicable.**

The following information is REQUIRED:

☐ Composition of the representative sample used for the simulation
☐ For each stream that contributes to flashing emissions:
- ☐ Temperature and pressure (inlet and outlet from separator(s))
- ☐ Simulation-predicted composition
- ☐ Molecular weight
- ☐ Flow rate

☐ Resulting flash emission factor or flashing emissions from simulation
☐ Working/breathing loss emissions from tanks and/or loading emissions if simulation is used to quantify those emissions

Additional information may be requested if necessary.

GENERAL INFORMATION (REQUIRED)

1. Bulk Storage Area Name Tanks	2. Tank Name: Produced Water Tank 001-004
3. Emission Unit ID number: TANKPW001-004	4. Emission Point ID number. EP-EC001, EP-EC002, EP-EC003
5. Date Installed , Modified or Relocated (for existing tanks)	6. Type of change:
TANK001-002 - 2016; TANK003-004 - 2017 Was the tank manufactured after August 23, 2011? ☑ Yes ☐ No	☑ New construction ☐ New stored ☐ Other ☐ Relocation

7A. Description of Tank Modification (if applicable)

7B. Will more than one material be stored in this tank? If so, a separate form must be completed for each material.
☐ Yes ☑ No

7C. Was USEPA Tanks simulation software utilized?

☐ Yes ☑ No

If Yes, please provide the appropriate documentation and items 8-42 below are not required.

TANK INFORMATION

8. Design Capacity (specify barrels or gallons). Use the internal cross-sectional area multiplied by internal height. 400bbls

9A. Tank Internal Diameter (ft): 12	9B. Tank Internal Height (or Length) (ft): 20
10A. Maximum Liquid Height (ft): 18	10B. Average Liquid Height (ft): 10
11A. Maximum Vapor Space Height (ft): 18	11B. Average Vapor Space Height (ft): 10

12. Nominal Capacity (specify barrels or gallons). This is also known as "working volume" and considers design liquid levels and overflow valve heights.: 400bbls

13A. Maximum annual throughput (gal/yr): 7358400	13B. Maximum daily throughput (gal/day): 20160
14. Number of Turnovers per year (annual net throughput/maximum tank liquid volume): 110	15. Maximum tank fill rate (gal/min) 168

16. Tank fill method ☐ Submerged ☑ Splash ☐ Bottom Loading

17. Is the tank system a variable vapor space system? ☐ Yes ☑ No

If yes, (A) What is the volume expansion capacity of the system (gal)?
(B) What are the number of transfers into the system per year?

18. Type of tank (check all that apply):

☑ Fixed Roof ☑ vertical ☐ horizontal ☑ flat roof ☐ cone roof ☐ dome roof ☐ other (describe)
☐ External Floating Roof ☐ pontoon roof ☐ double deck roof
☐ Domed External (or Covered) Floating Roof
☐ Internal Floating Roof ☐ vertical column support ☐ self-supporting
☐ Variable Vapor Space ☐ lifter roof ☐ diaphragm
☐ Pressurized ☐ spherical ☐ cylindrical
☐ Other

ATTACHMENT L – STORAGE VESSEL DATA SHEET

PRESSURE/VACUUM CONTROL DATA

19. Check as many as apply:

- ☐ Does not apply
- ☐ Inert Gas Blanket
- ☑ Vent to Vapor Combustion Device (vapor combustors, flares, thermal
- ☐ Conservation Vent (psig)

Vacuum Setting Pressure Setting

- ☐ Emergency relief Valve (psig)

Vacuum Setting Pressure Setting

- ☐ Thief Hatch ☐ Yes ☐ No

Complete appropriate Air Pollution Control Device Sheet

20. Expected Emission Rate (submit Test Data or Calculations here or elsewhere in the application).

Material Name	Flashing Loss		Breathing Loss		Working Loss		Total Emission Loss		1 Estimation Method
	lb/hr	tpy	lb/hr	tpy	lb/hr	tpy	lb/hr	tpy	
Please see Table 6 and Table 7									

TANK CONSTRUCTION & OPERATION INFORMATION

21. Tank Shell Construction:
☐ Riveted ☐ Gunite lined ☐ Epoxy-coated rivets ☑ Other(describe): Steel

21A. Shell Color: Green	21B. Roof Color: Green	21C. Year Last Painted TANK001-002 - 2016; TANK003-004 - 2017

22. Shell Condition (if metal and unlined):
☑ No Rust ☐ Light Rust ☐ Dense Rust ☐ Not applicable

22A. Is the tank heated? ☐ Yes ☑ No	22B. If yes, operating temperature:	22C. If yes, how is heat provided to tank?

23. Operating Pressure Range (psig): 0 psig, atmospheric
Must be listed for tanks using VRUs with closed vent system

24. Is the tank a Vertical Fixed Roof Tank? ☑ Yes ☐ No	24A. If yes, for dome roof provide radius (ft): NA	24B. If yes, for cone roof, provide slop (ft/ft): NA

25. Complete the following section for **Floating Roof Tanks** Does Not Apply

25A. Year Internal Floaters Installed:

25B. Primary Seal Type: ☐ Metallic (mechanical) shoe seal ☐ Liquid mounted resilient seal ☐ Vapor mounted resilient seal ☐ Other (describe):

25C. Is the Floating Roof equipped with a Secondary Seal? ☐ Yes ☐ No

25D. If YES, how is the secondary seal mounted? (check one)
☐ Shoe ☐ Rim ☐ Other(describe): Steel

25E. Is the Floating Roof equipped with a weather shield? ☐ Yes ☐ No

25F. Describe deck fittings

26. Complete the following section for Internal Floating Roof Tanks ☐ Does not apply

26A. Deck Type: ☐ Bolted ☐ Welded	26B. For bolted decks, provide deck construction

26C. Deck seam:
☐ 5 ft. wide ☐ 6 ft. wide ☐ 7 ft. wide ☐ 5 x 7.5 ft. ☐ 5 x 12 ft. ☐ Other

26D. Deck seam length (ft)	26E. Area of deck (ft^2)	26F. For column supported tanks: Number of columns:	26G. For column supported tanks, Diameter of each column:

27. Closed Vent System with VRU ☐ Yes ☑ No

28. Closed Vent System with Enclosed Combustor? ☑ Yes ☐ No

ATTACHMENT L – STORAGE VESSEL DATA SHEET			
SITE INFORMATION			
29. Provide the city and state on which the data in this section are based.: Charleston, WV			
30. Daily Average Ambient Temperature (°F): 65.08		31. Annual Average Maximum Temperature (°F): 75.94	
32. Annual Average Minimum Temperature (°F): 46.56		33. Average Wind Speed (miles/hr): 5.9mph	
34. Annual Average Solar Insulation Factor (BTU/(ft2·day)) 1030.236		35. Atmospheric Pressure (psia): 14.8 (based off local conditions, could not find annual)	
LIQUID INFORMATION			
36. Average daily temperature range of bulk liquid (F): 65.08	36A. Minimum (°F): 46.56	36B. Maximum (°F) 75.94	
37. Average operating pressure range of tank (psig): 0	37A. Minimum (psig) 0	37B. Maximum (psig) 0	
38A. Minimum Liquid Surface Temperature (°F) 46.56	38B. Corresponding Vapor Pressure (psia) 0.23		
39A. Average Liquid Surface Temperature (°F) 65.08	39B. Corresponding Vapor Pressure (psia) 0.38		
40A. Maximum Liquid Surface Temperature (°F) 75.94	40B. Corresponding Vapor Pressure (psia) 0.50		
41. Provide the following for each liquid or gas to be stored in tank. Add additional pages if necessary.			
41A. Material Name or Composition	Produced Water		
41B. CAS Number	mix of HC and water		
41C. Liquid Density (lb/gal)	8.3300		
41D. Liquid Molecular Weight (lb/lb-mole)	18.02		
41E. Vapor Molecular Weight (lb/lb-mole)	18.4664		
Maximum Vapor Pressure 41F. True (psia)	0.4987		
41G. Reid (psia)	1.0332		
Months Storage per Year 41H. From - To	year round		

Attachment M
Natural Gas Fired Fuel Burning Unit(s)
Data Sheet

ATTACHMENT M – SMALL HEATERS AND REBOILERS NOT SUBJECT TO 40CFR60 SUBPART DC DATA SHEET

Complete this data sheet for each small heater and reboiler not subject to 40CFR60 Subpart Dc at the facility. ***The Maximum Design Heat Input (MDHI) must be less than 10 MMBTU/hr.***

Emission Unit ID#	Emission Point ID#	Emission Unit Description (Manufacturer, model#)	Year Installed/ Modified	Type and Date of Change	Maximum Design Heat Input (MMBTU/hr)	Fuel Heating Value (BTU/scf)
GPU001	EP-GPU001	Gas Production Unit Heater	2017	New	1.5	1201.3172
GPU002	EP-GPU002	Gas Production Unit Heater	2017	New	1.5	1201.3172
GPU003	EP-GPU003	Gas Production Unit Heater	2017	New	1.5	1201.3172
GPU004	EP-GPU004	Gas Production Unit Heater	2017	New	1.5	1201.3172
GPU005	EP-GPU005	Gas Production Unit Heater	2017	New	1.5	1201.3172
GPU006	EP-GPU006	Gas Production Unit Heater	2017	New	1.5	1201.3172
GPU007	EP-GPU007	Gas Production Unit Heater	2017	New	1.5	1201.3172
GPU008	EP-GPU008	Gas Production Unit Heater	2017	New	1.5	1201.3172
GPU009	EP-GPU009	Gas Production Unit Heater	2017	New	1.5	1201.3172
GPU010	EP-GPU010	Gas Production Unit Heater	2017	New	1.5	1201.3172
GPU011	EP-GPU011	Gas Production Unit Heater	2017	New	1.5	1201.3172
H001	EP-H001	Gas Production Unit Heater	2016	Removal	1.0	1208.97
H002	EP-H002	Gas Production Unit Heater	2016	Removal	1.0	1208.97
H003	EP-H003	Gas Production Unit Heater	2016	Removal	1.0	1208.97
H004	EP-H004	Gas Production Unit Heater	2016	Removal	1.0	1208.97
H005	EP-H005	Gas Production Unit Heater	2016	Removal	1.0	1208.97
H006	EP-H006	Gas Production Unit Heater	2016	Removal	1.0	1208.97
H007	EP-H007	Gas Production Unit Heater	2016	Removal	1.0	1208.97
H008	EP-H008	Gas Production Unit Heater	2016	Removal	1.0	1208.97
H009	EP-H009	Gas Production Unit Heater	2016	Removal	1.0	1208.97
H010	EP-H010	Gas Production Unit Heater	2016	Removal	1.0	1208.97
H011	EP-H011	Gas Production Unit Heater	2016	Removal	1.0	1208.97
LH001	EP-LH001	Line Heater	2017	New	2.0	1201.3172
LH002	EP-LH002	Line Heater	2017	New	2.0	1201.3172
LH003	EP-LH003	Line Heater	2017	New	2.0	1201.3172
LH004	EP-LH004	Line Heater	2017	New	2.0	1201.3172
LH005	EP-LH005	Line Heater	2017	New	2.0	1201.3172
LH006	EP-LH006	Line Heater	2017	New	2.0	1201.3172
LH007	EP-LH007	Line Heater	2017	New	2.0	1201.3172
LH008	EP-LH008	Line Heater	2017	New	2.0	1201.3172
LH009	EP-LH009	Line Heater	2017	New	2.0	1201.3172
LH010	EP-LH010	Line Heater	2017	New	2.0	1201.3172
LH011	EP-LH011	Line Heater	2017	New	2.0	1201.3172

1. Enter the appropriate Emission Unit (or Source) identification number for each fuel burning unit located at the production pad. Gas Producing Unit Burners should be designated GPU-1, GPU-2, etc. Heater Treaters should be designated HT-1, HT-2, etc. Heaters or Line Heaters should be designated LH-1, LH-2, etc. For sources, use 1S, 2S, 3S…or other appropriate designation. Enter glycol dehydration unit Reboiler Vent data on the Glycol Dehydration Unit Data Sheet.
2. Enter the appropriate Emission Point identification numbers for each fuel burning unit located at the production pad. Gas Producing Unit Burners should be designated GPU-1, GPU-2, etc. Heater Treaters should be designated HT-1, HT-2, etc. Heaters or Line Heaters should be designated LH-1, LH-2, etc. For emission points, use 1E, 2E, 3E…or other appropriate designation.
3. New, modification, removal.
4. Enter design heat input capacity in MMBtu/hr.
5. Enter the fuel heating value in BTU/standard cubic foot.

Attachment N
Internal Combustion Engine Data Sheet

ATTACHMENT N – INTERNAL COMBUSTION ENGINE DATA SHEET

Complete this data sheet for each internal combustion engine at the facility. Include manufacturer performance data sheet(s) or any other supporting document if applicable. Use extra pages if necessary. *Generator(s) and microturbine generator(s) shall also use this form.*

Emission Unit ID#	ENG001, ENG002		
Engine Manufacturer/Model	Engine (MSG-425 2.5L Engine)		
Manufacturers Rated bhp/rpm	76 HP @ 3200 rpm		
Source Status	NS		
Date Installed/ Modified/ Removed/ Relocated	2017		
Engine Manufacturer/ Reconstruction Date	2015		
Check all applicable Federal Rules for the engine (include EPA Certification of Conformity if applicable)	☑ 40CFR60 Subpart JJJJ ☑ JJJJ Certified? ☐ 40CFR60 Subpart IIII ☐ IIII Certified? ☑ 40CFR63 Subpart ZZZZ ☐ NESHAP ZZZZ/NSPS JJJJ Window ☐ NESHAP ZZZZ Remote Sources	☐ 40CFR60 Subpart JJJJ ☐ JJJJ Certified? ☐ 40CFR60 Subpart IIII ☐ IIII Certified? ☐ 40CFR63 Subpart ZZZZ ☐ NESHAP ZZZZ/NSPS JJJJ Window ☐ NESHAP ZZZZ Remote Sources	☐ 40CFR60 Subpart JJJJ ☐ JJJJ Certified? ☐ 40CFR60 Subpart IIII ☐ IIII Certified? ☐ 40CFR63 Subpart ZZZZ ☐ NESHAP ZZZZ/NSPS JJJJ Window ☐ NESHAP ZZZZ Remote Sources
Engine Type	4SRB		
APCD Type	NSCR		
Fuel Type	RG		
H2S (gr/ 100 scf)	0		
Operating bhp/rpm	60 HP @ 2300 rpm		
BSFC (BTU/bhp-hr)	8289		
Hourly Fuel Throughput (Must use 8,760 hrs/yr unless emergency generator)	345.00 ft^3/hr gal/hr		
Fuel Usage or Hours of Operation Metered	3.022 $MMft^3$/yr gal/yr		

Calculation Methodology	Pollutant	Hourly PTE (lb/hr)	Annual PTE (tons/year)	Hourly PTE (lb/hr)	Annual PTE (tons/year)	Hourly PTE (lb/hr)	Annual PTE (tons/year)
MD	NOx	0.1250	0.5477				
MD	CO	0.8253	3.6146				
AP	VOC	0.0373	0.1633				
AP	SO2	0.0007	0.0032				
AP	PM10	0.0120	0.0524				
AP	Formaldehyde	0.0258	0.1131				
AP	Total HAPs	0.0289	0.1267				
OT	GHG (CO2e)	138.5936	607.0398				

Installation Drawings

Front End View

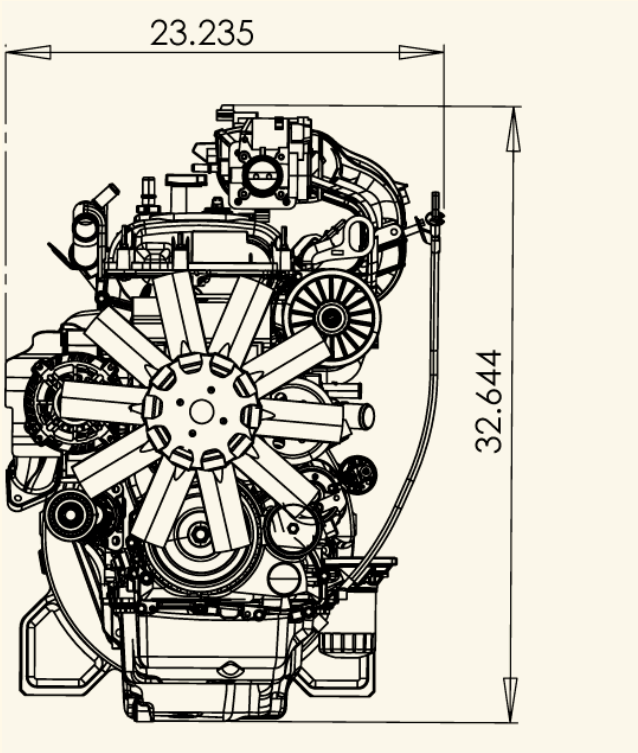

Left Side View

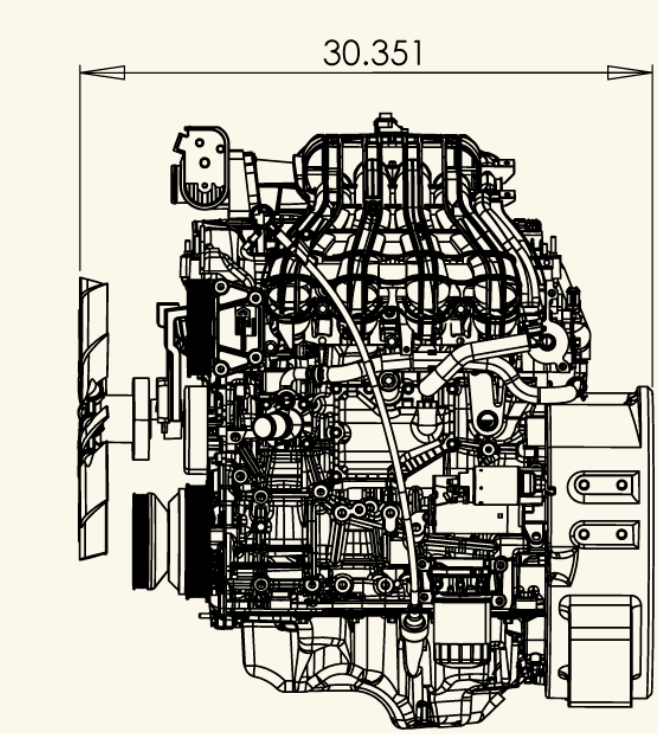

Power Curves (corrected per SAE J1349)

Gasoline

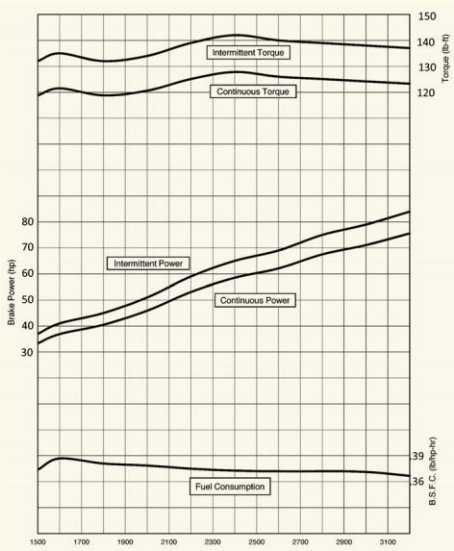

Natural Gas

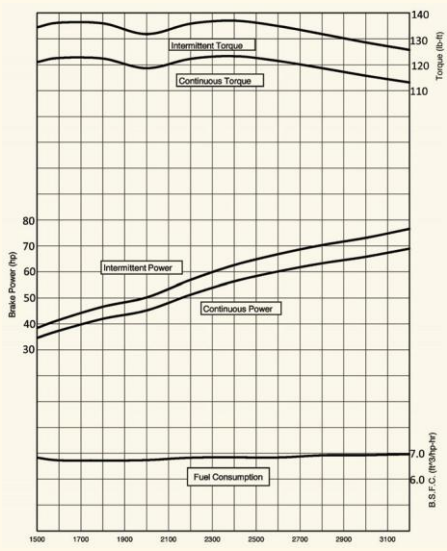

Liquefied Petroleum Gas

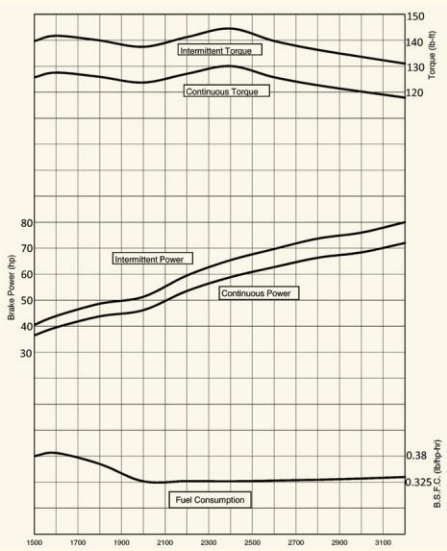

Ford Power Products

Powertrain Assemblies & Components Provided By Ford Component Sales

MSG-425 EFI

2.5 Liter 4-Cylinder

Options

Engine Cooling Fans
- 15" (381mm) diameter suction
- 15" (381mm) diameter pusher

Flywheels
- 10" (254mm) SAE over-center clutch
- flat face flywheel

Flywheel Housings
- SAE #4

Exhaust Manifold
- rear dump down

Power Steering Pump
Wiring Harnesses
Discrete Speed Switch
Variable Speed Hand Throttle
Variable Speed Foot Pedal
Engine Mounts
- Automotive with insulators
- Open power unit

Electronic Instrument Panel, Gauges
Three Way Catalyst / Muffler Standard

Transmissions

6R80 electronic shift
C6 Mechanical

Emissions Information

California Air Resources Board (CARB)
Environmental Protection Agency (EPA)
Emission Certified Packages Available.

Warranty

Contact Engine Distributors, Inc
for warranty details.

Ford Power Products

Powertrain Assemblies
& Components
Provided By Ford
Component Sales

Specifications

Engine Type	I-4
Bore and Stroke	3.5"x 3.93" (89mm x 100mm)
Displacement	2.5L Liter (152.5 CID)
Compression Ratio	9.7:1
Oil Capacity	7 qts. including filter
Net Weight	351 Lbs. with accessories (159 Kgs.)
Dimensions	L 30.3" x W 23.3" x H 32.6" (769 mm x 589 mm x 828 mm)

Gasoline (corrected per SAE J1349)

Unleaded 87 or 89 octane

Intermittent Power	84 [HP] @ 3200rpm	(62 [kW] @ 3200rpm)
Continuous power	75 [HP] @ 3200rpm	(56 [kW] @ 3200rpm)
Intermittent Torque	137 [ft-lbs] @3200rpm	(185 [N-m] @ 3200rpm)
Continuous Torque	123 [ft-lbs] @3200rpm	(166 [N-m] @ 3200rpm)

Natural Gas (corrected per SAE J1349)

Fuel Specification	1050 BTU/FT3	
Intermittent Power	76 [HP] @ 3200rpm	(56 [kW] @ 3200rpm)
Continuous power	68 [HP] @ 3200rpm	(50 [kW] @ 3200rpm)
Intermittent Torque	125 [ft-lbs] @3200rpm	(169 [N-m] @ 3200rpm)
Continuous Torque	113 [ft-lbs] @3200rpm	(153 [N-m] @ 3200rpm)

Liquefied Petroleum Gas (corrected per SAE J1349)

Fuel Specification	HD-5	
Intermittent Power	80 [HP] @ 3200rpm	(59 [kW] @ 3200rpm)
Continuous power	72 [HP] @ 3200rpm	(53 [kW] @ 3200rpm)
Intermittent Torque	131 [ft-lbs] @3200rpm	(177 [N-m] @ 3200rpm)
Continuous Torque	118 [ft-lbs] @3200rpm	(160 [N-m] @ 3200rpm)

Standard Features / Benefits

Set-for-life valvetrain
Deep skirted, ribbed cylinder block casting for rigidity
Aluminum AA319 cylinder block cast with the Cosworth process, including cast-in-place iron cylinder liners.
Chain driven dual camshafts with automatic tensioning system
Structural front cover and oil pan
Alternate fuel ready valvetrain components
Individual coil on plug electronic ignition
Cast aluminum camshaft cover to ensure warp-free sealing
Sintered metal connecting rods
Nodular iron crankshaft, featuring five main bearings, eight counterweights
Broadband knock sensor, calibrated for individual cylinder use
Gasoline Sequential Port Fuel Injection
Closed loop fuel control for all fuels
Electronic engine management system with built-in engine protection against detonation, high coolant temperature, low oil pressure, over speed shutdown and starter lockout
Next generation governing - discrete speeds, variable speeds, drive by wire - using the highest quality components.

California Environmental Protection Agency **Air Resources Board**	**ENGINE DISTRIBUTORS, INC.**	**EXECUTIVE ORDER U-L-034-0028** New Off-Road Large Spark-Ignition Engines Above 19 Kilowatts

Pursuant to the authority vested in the Air Resources Board by the Health and Safety Code, Division 26, Part 5, Chapters 1 and 2; and

Pursuant to the authority vested in the undersigned by Health and Safety Code Sections 39515 and 39516 and Executive Order G-14-012;

IT IS ORDERED AND RESOLVED: That the following new large spark-ignition engines and emission control systems produced by the manufacturer are certified for use in off-road equipment as described below. Production engines shall be in all material respects the same as those for which certification is granted.

MODEL YEAR	ENGINE FAMILY NAME	ENGINE DISPLACEMENT (liters)	FUEL TYPE
2015	FEDIB02.5MSG	2.5	Gasoline, LPG, CNG, Gasoline-LPG Dual Fuel

DURABILITY HOURS	SPECIAL FEATURES & EMISSION CONTROL SYSTEMS	TYPICAL EQUIPMENT USAGE
5000	Three-Way Catalytic Converter, Heated Oxygen Sensor, Sequential Multiport Fuel Injection (Gas), Gaseous Fuel Mixer (LPG, CNG)	Forklift, Aerial Lift, Generator, Compressor, Pump, Other Industrial Equipment

ENGINE MODELS (rated power in kilowatt, kW)	MSG425-DF (64.3 kW), MSG425-GAS (64.3 kW), MSG425-LPG (59.8 kW), MSG425-LP VAPOR (59.8 kW), MSG425-NG (57.3 kW)

The following are the hydrocarbon plus oxides of nitrogen (HC+NOx) and carbon monoxide (CO) exhaust certification emission standards (Title 13, California Code of Regulations, (13 CCR) Section 2433(b)(1)) and certification emission levels for this engine family in grams per kilowatt-hour (g/kW-hr). Engines within this engine family shall have closed crankcases in conformance with 13 CCR Section 2433(b)(3).

(g/kW-hr)	HC+NOx	CO
Exhaust Standards	0.8	20.6
Certification Levels	0.5	3.3

The following is the evaporative hydrocarbon emission standard (13 CCR Section 2433(b)(4)) and certification emission level for this engine family in grams per gallon of fuel tank capacity (g/gallon).

Evaporative Certification Method	HC Certification Level (g/gallon)	HC Certification Standard (g/gallon)
Design Based	N/A	0.2

BE IT FURTHER RESOLVED: That for the listed engines for the aforementioned model-year, the manufacturer has submitted, and the Executive Officer hereby approves, the information and materials to demonstrate certification compliance with 13 CCR Section 2433(c) (certification and test procedures), 13 CCR Section 2434 (emission control labels), and 13 CCR Sections 2435 and 2436 (emission control system warranty).

Engines certified under this Executive Order must conform to all applicable California emission regulations.

This Executive Order is only granted to the engine family and model-year listed above. Engines in this family that are produced for any other model-year are not covered by this Executive Order.

Executed at El Monte, California on this 14th day of November 2014.

FOR Annette Hebert, Chief
Emissions Compliance, Automotive Regulations and Science Division

	UNITED STATES ENVIRONMENTAL PROTECTION AGENCY **2015 MODEL YEAR** **CERTIFICATE OF CONFORMITY** **WITH THE CLEAN AIR ACT**	**OFFICE OF TRANSPORTATION** **AND AIR QUALITY** **ANN ARBOR, MICHIGAN 48105**

Certificate Issued To: Engine Distributors, Inc. (U.S. Manufacturer or Importer) **Certificate Number: FEDIB02.5MSG-002**	**Effective Date:** **12/09/2014** **Expiration Date:** **12/31/2015**	**Byron J. Bunker, Division Director** **Compliance Division**	**Issue Date:** **12/09/2014** **Revision Date:** **N/A**

Manufacturer: Engine Distributors, Inc.
Engine Family: FEDIB02.5MSG
Certification Type: Mobile and Stationary
Fuel : LPG/Propane
Gasoline (up to and including 10% Ethanol)
Natural Gas (CNG/LNG)
Emission Standards : NMHC + NOx (g/kW-hr) : 0.8
HC + NOx (g/kW-hr) : 0.8
CO (g/kW-hr) : 20.6NMHC + NOx (g/kW-hr) : 0.8
HC + NOx (g/kW-hr) : 0.8
CO (g/kW-hr) : 20.6
Emergency Use Only : N

Pursuant to Section 213 of the Clean Air Act (42 U.S.C. section 7547) and 40 CFR Part 60, 40 CFR Part 1048, 1065, 1068, and 60 (stationary only and combined stationary and mobile) and subject to the terms and conditions prescribed in those provisions, this certificate of conformity is hereby issued with respect to the test engines which have been found to conform to applicable requirements and which represent the following nonroad engines, by engine family, more fully described in the documentation required by 40 CFR Part 60, 40 CFR Part 1048 and produced in the stated model year.

This certificate of conformity covers only those new nonroad spark-ignition engines which conform in all material respects to the design specifications that applied to those engines described in the documentation required by 40 CFR Part 60, 40 CFR Part 1048 and which are produced during the model year stated on this certificate of the said manufacturer, as defined in 40 CFR Part 60, 40 CFR Part 1048. This certificate of conformity does not cover nonroad engines imported prior to the effective date of the certificate.

It is a term of this certificate that the manufacturer shall consent to all inspections described in 40 CFR 1068.20 and authorized in a warrant or court order. Failure to comply with the requirements of such a warrant or court order may lead to revocation or suspension of this certificate for reasons specified in 40 CFR Part 60, 40 CFR Part 1048. It is also a term of this certificate that this certificate may be revoked or suspended or rendered void *ab initio* for other reasons specified in 40 CFR Part 60, 40 CFR Part 1048.

This certificate does not cover large nonroad engines sold, offered for sale, or introduced, or delivered for introduction, into commerce in the U.S. prior to the effective date of the certificate.

Gasoline

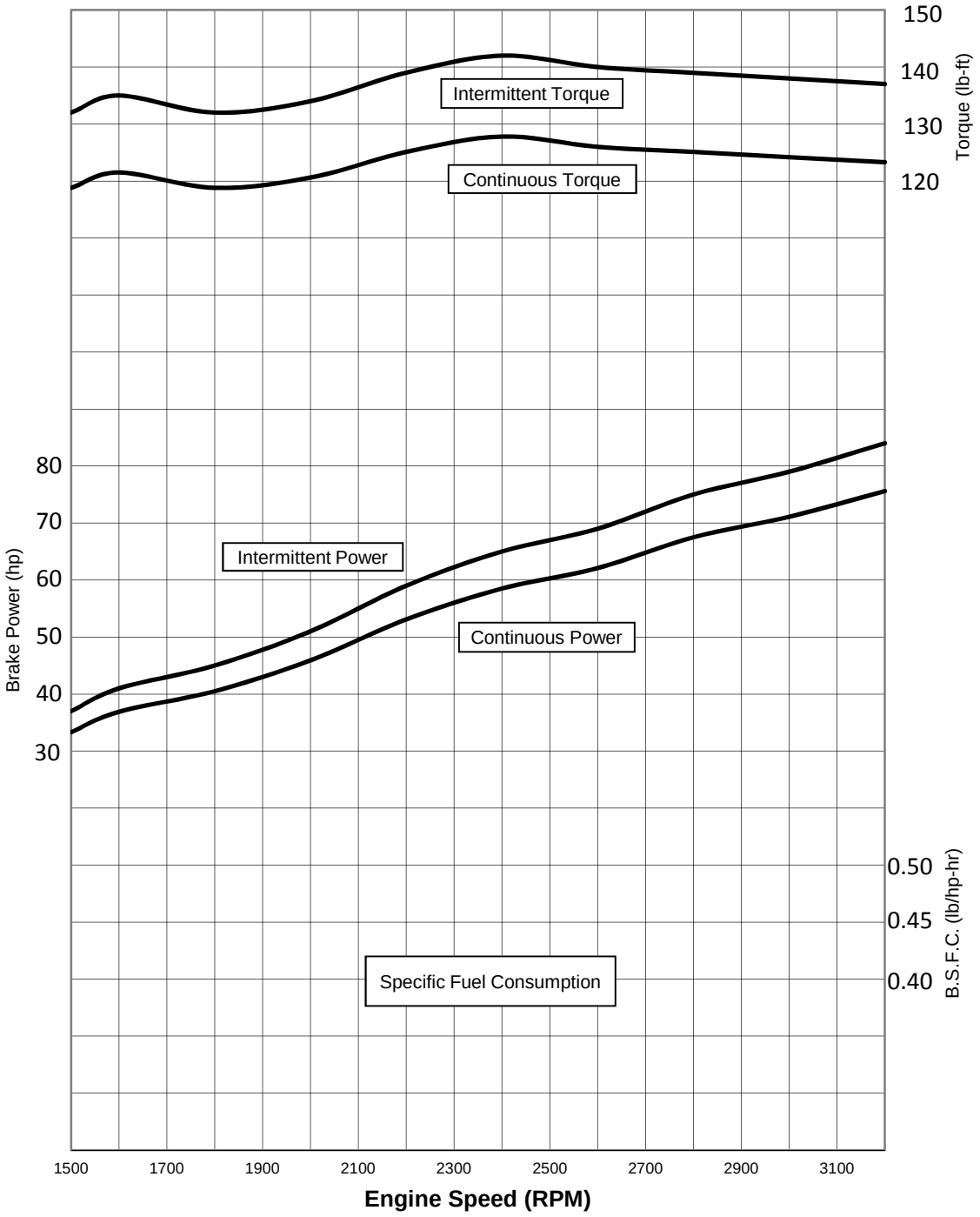
150
140
130
120
Torque (lb-ft)
Intermittent Torque
Continuous Torque
80
70
60
50
40
30
Brake Power (hp)
Intermittent Power
Continuous Power
0.50
0.45
0.40
B.S.F.C. (lb/hp-hr)
Specific Fuel Consumption
1500
1700
1900
2100
2300
2500
2700
2900
3100
Engine Speed (RPM)

LP

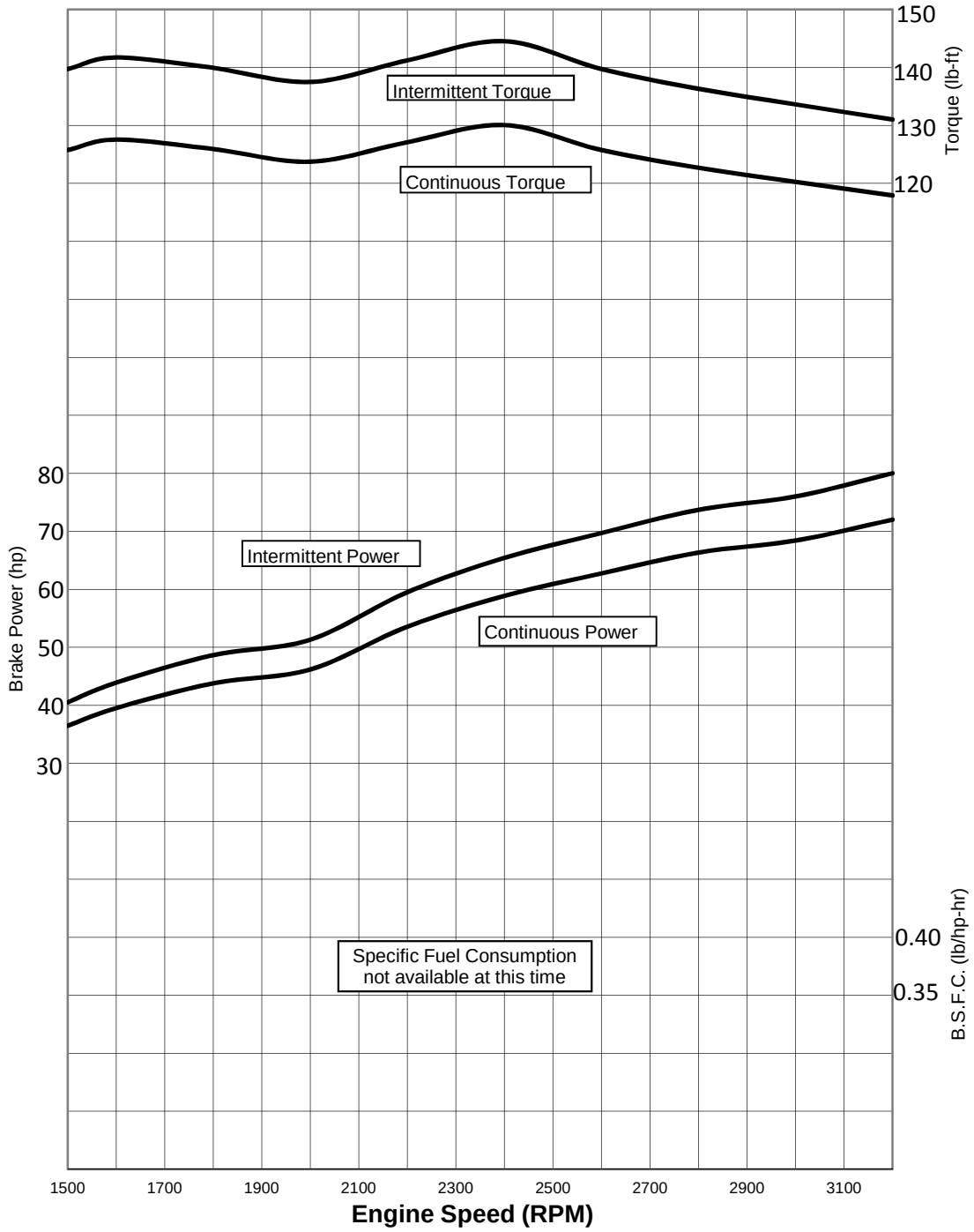
150
140
130
120
Torque (lb-ft)
Intermittent Torque
Continuous Torque
80
70
60
50
40
30
Brake Power (hp)
Intermittent Power
Continuous Power
0.40
0.35
B.S.F.C. (lb/hp-hr)
Specific Fuel Consumption
not available at this time
1500
1700
1900
2100
2300
2500
2700
2900
3100
Engine Speed (RPM)

NG

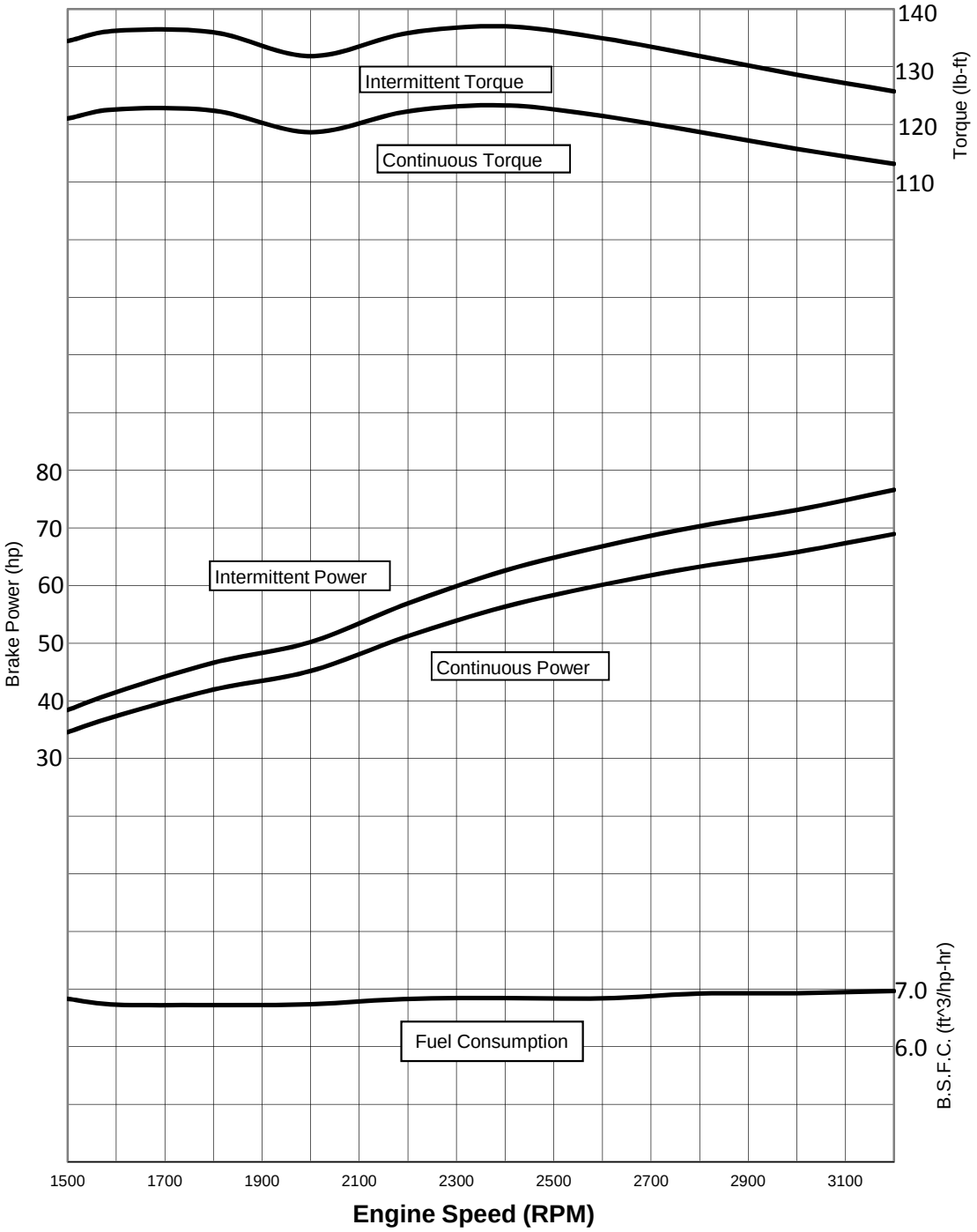
140
130
120
110
Torque (lb-ft)
Intermittent Torque
Continuous Torque
80
70
60
50
40
30
Brake Power (hp)
Intermittent Power
Continuous Power
7.0
6.0
B.S.F.C. (ft^3/hp-hr)
Fuel Consumption
1500
1700
1900
2100
2300
2500
2700
2900
3100
Engine Speed (RPM)

Attachment O
Tanker Truck Loading Data Sheet

ATTACHMENT O – TANKER TRUCK LOADING DATA S HEET

Complete this data sheet for each new or modified bulk liquid transfer area or loading rack at the facility. This is to be used for bulk liquid transfer operations to tanker trucks. Use extra pages if necessary.

Truck Loadout Collection Efficiencies

The following applicable capture efficiencies of a truck loadout are allowed:

- For tanker trucks passing the MACT level annual leak test – 99.2%
- For tanker trucks passing the NSPS level annual leak test – 98.7%
- For tanker trucks not passing one of the annual leak tests listed above – 70%

Compliance with this requirement shall be demonstrated by keeping records of the applicable MACT or NSPS Annual Leak Test certification for ***every*** truck and railcar loaded/unloaded. This requirement can be satisfied if the trucking company provided certification that its entire fleet was compliant. This certification must be submitted in writing to the Director of the DAQ. These additional requirements must be noted in the Registration Application.

Emission Unit ID#:	L001, L002	Emission Point ID#:	EP-L001, EP-L002	Year Installed/ Modified:	2016
Emission Unit Description:	Condensate Loading, Produced Water Loading				

Loading Area Data

Number of Pumps:	2	Number of Liquids Loaded: 2		Max number of trucks loading at one time:	2

Are Tanker trucks pressure tested for leaks at this any other location? ☑ Yes ☐ No ☐ Not Required

If Yes, Please Describe: Tank trucks are pressure tested for leaks at the location of the leak testing company. Trucks are tested using EPA Method 27-internal vapor valve test and issued certification that DOT requirements are met.

Provide description of closed vent system and any bypasses

Are any of the following truck loadout systems utilized? No

☐ Closed System to Tanker Truck passing a MACT level annual leak test?

☐ Closed System to Tanker Truck passing a NSPS level annual leak test?

☐ Closed System to Tanker Truck not passing an annual leak test and has vapor return?

Projected Maximum Operating Schedule (for rack or transfer point as a whole)

Time	Jan - Mar	Apr - Jun	Jul - Sept	Oct - Dec
Hours/day	6	6	6	6
Days/week	5	5	5	5

Bulk Liquid Data (use extra pages as necessary)

Liquid Name		Condensate	Produced Water	
Max. Daily Throughput (1000 gal/day)		25.83	20.16	
Max. Annual Throughput (1000 gal/yr)		9427.95	7358.40	
Loading Method		BF	BF	
Max. Fill Rate (gal/min)		168	168	
Average Fill Time (min/loading)		50	50	
Max. Bulk Liquid Temperature (F)		75.94	75.94	
True Vapor Pressure		5.03	0.50	
Cargo Vessel Condition		U	U	
Control Equipment or Method		None	None	
Max. Collection Efficiency (%)		0	0	
Max. Control Efficiency (%)		0	0	
Max VOC Emission Rate	Loading (lb/hr)	12.8451	0.0005	
	Annual (ton/yr)	6.0071	0.0002	
Max HAP Emission Rate	Loading (lb/hr)	0.0913	1.51E-06	
	Annual (ton/yr)	0.0427	5.52E-07	
Estimation Method		Promax	Promax	

1 BF Bottom Fill SP Splash Fill SUB Submerged Fill

2 At maximum bulk liquid temperature

3 B Ballasted Vessel C Cleaned U Uncleaned (dedicated servi O Other (describe)

4 List as many as apply (complete and submit appropriate Air Pollution Control Device Sheets)

CA Carbon Adsorption VB Dedicated Vapor Balance (closed system)

ECD Enclosed Combustion Device F Flare

TO Thermal Oxidization or Incineration

5 EPA EPA Emission Factor in AP-42 MB Material Balance

TM Test Measurement based upon test data submittal O Other (describe)

Attachment R
Air Pollution Control Device – Emission Reduction Device Sheets

ATTACHMENT R – AIR POLLUTION CONTROL DEVICE / EMISSION REDUCTION DEVICE SHEETS

Complete the applicable air pollution control device sheet s for each flare, vapor combustor, thermal oxidizer, condenser, adsorption system, vapor recovery unit , BTEX Eliminator, Reboiler with and without Glow Plug, etc. at the facility. Use extra pages if necessary.

Emissions calculations must be performed using the most conservative control device efficiency.

The following five (5) rows are only to be completed if registering an alternative air pollution control device.

Emission Unit ID:	NA	Make/Model:	NA
Primary Control Device ID:	NA	Make/Model	NA
Control Efficiency (%):	NA	APCD/ERD Data Sheet Completed	☐ Yes ☐ No
Secondary Control Device ID:	NA	Make/Model	NA
Control Efficiency (%):	NA	APCD/ERD Data Sheet Completed	☐ Yes ☐ No

VAPOR COMBUSTION (Including Enclosed Combustors)

General Information

Control Device ID#:	EC001, EC002, EC003	Installation Date: ☑ New ☐ Modified ☐ Relocated	
Maximum Rated Total Flow Capacity	5458 scfh 131000 scfd	Maximum Design Heating Input (from mfg. spec sheet)	12.0 MMBTU/hr
Design Heat Content	2300 BTU/scf		

Control Device Information

Type of Vapor Combustion Control?

☑ Enclosed Combustion Device ☐ Elevated Flare ☐ Ground Flare
☐ Thermal Oxidizer

Manufacturer:	Cimarron	Hours of operation per year?	8760
Model:	48" HV ECD		

List the emission units whose emissions are controlled by this vapor control device (Emission Point ID# NA

Emission Unit ID#	Emission Source Description	Emission Unit ID#	Emission Source Description
TANKCOND001-010	Condensate Tanks		
TANKPW001-004	Produced Water Tanks		

If this vapor combustor controls emissions from more than six (6) emission units, please attach additional pages.

Assist Type (Flares only)	Flare height	Tip Diameter	Was the design per §60.18?
☐ Steam ☐ Air ☐ Pressure ☑ Non	25 feet	3.33 feet	☑ Yes ☐ No Provide determination

Waste Gas Information

Maximum Waste Gas Flow Rate	Heat Value of Waste Gas Stream	Exit Velocity of the Emission Stream
23.73 (scfm)	2,063.70 BTU/ft^3	0.0454 (ft/s)

Please see Attachment S, Tables 6 & 7 for VOC composition/ characteristics of the waste gas stream to be burned.

Pilot Gas Information

Number of Pilot Lights	Fuel Flow Rate to Pilot Flame per Pilot	Heat Input per Pilot	Will automatic re-ignition be used?
3	12.6 scfh	12.800 BTU/hr	☑ Yes ☐ No

If automatic re-ignition is used, please describe the method. Flame Rectification, a thermocouple equivalent

Is pilot flame equipped with a monitor to detect the presence of the flame? ☑ Yes ☐ No	If Yes, What type? ☑ Thermocouple ☐ Infrared ☐ Ultraviolet ☐ Camera ☐ Other:

Describe all operating ranges and maintenance procedures required by the manufacturer to maintain the warranty. *(If unavailable, please indicate).*

Additional information attached? ☑ Yes ☐ No Manufacturer's specs sheet

Please attach copies of manufacturer's data sheets, drawings, flame demonstration per §60.18 or §63.11 (b) and performance testing.

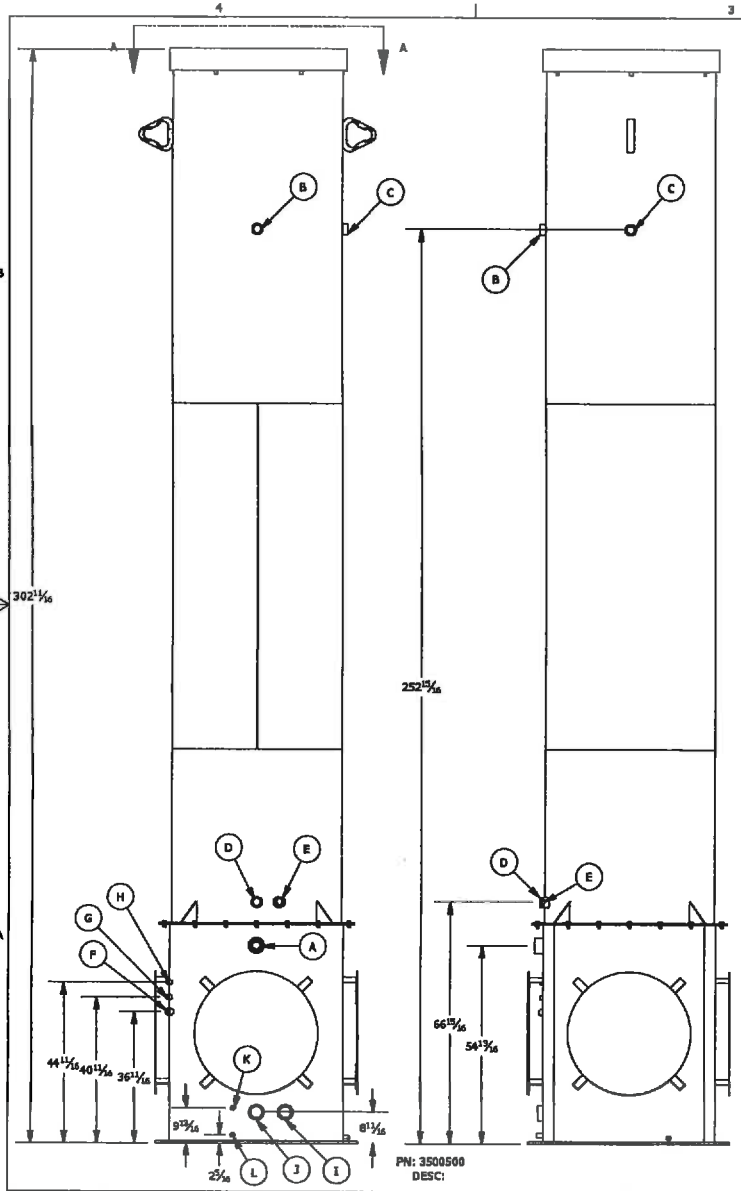

48" DIA x 302 5/8" HEIGHT, 88 ORIFICES
EMISSION CONTROL DEVICE

* >98% TVOC DRE, CERTIFIED USEPA 40 CFR 60, APPENDIX A, SOURCE EMMISIONS TEST METHODS REFERENCED. MEETS ALL EPA & CDPHE REGULATIONS.
* DESTROYS OIL/CONDENSATE PRODUCTION TANK VAPORS W/ NO VISIBLE FLAME.
* EXCELLENT OPACITY AND SMOKELESS OPERATION.
* RELIABLE AND CUSTOMIZABLE IGNITION.
* VERY LOW CAPITAL AND OPERATING COST.
* EASY TO OPERATE AND MAINTAIN.
* FIELD TESTED TO DESTROY UP TO 119.5 MDSCFD (131 MCFD) @ 10 oz/in^2; 2300 BTU/CF WASTE GAS (SG 1.45)
* STRUCTURE CERTIFIED FOR 90 MPH 3-SEC WIND GUST PER ASCE 7-05 & IBC 2006 STANDARDS. HIGHER WIND LOAD RATED STRUCTURES AVAILABLE.

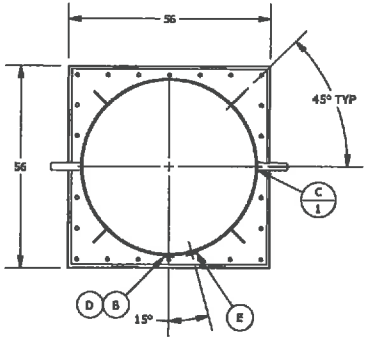

VIEW A-A

PN: 3500500
DESC:

SCHEDULE OF NOZZLES				
MARK	QTY	DESCRIPTION	SERIES	SERVICE
A	1	3" HALF COUPLING	2000#	BURNER WASTE GAS IN
B	1	2" FULL COUPLING	3000#	FLOW TEST/AUTOMATION
C	1	2" FULL COUPLING	3000#	FLOW TEST/AUTOMATION
D	1	2" FULL COUPLING	3000#	SIGHT GLASS
E	1	2" FULL COUPLING	3000#	MANUAL LIGHTING
F	1	1" FULL COUPLING	3000#	PILOT GAS IN
G	1	1/2" FULL COUPLING	3000#	IGNITOR CABLE
H	1	1/2" FULL COUPLING	3000#	AUTOMATION
I	1	3" HALF COUPLING	3000#	DRIP TANK WASTE GAS IN
J	1	3" HALF COUPLING	3000#	DRIP TANK WASTE GAS OUT
K	1	1/2" FULL COUPLING	3000#	AUTOMATION
L	1	1/2" FULL COUPLING	3000#	LIQUID DRAIN

UNLESS OTHERWISE SPECIFIED

1. REMOVE ALL BURRS AND SHARP CORNERS.
2. COR. RAD .03
3. DO NOT SCALE DRAWING.
4. ALL DIMENSIONS ARE IN INCHES.
5. MACHINE FIN.
6. FABRICATION
   .X = ± 0.25
   .XX = ± 0.125
   .XXX = ± 0.06
   ANGLES ± 3°
7. MACHINE
   .X = ±0.030
   .XX = ±0.015
   .XXX = ±0.005
   ANGLES ±1/2°
   CONTRICITY WITHIN 0.010 TIR

APPROVED FOR A.S.M.E CODE, SECTION VIII DIV 1
_____ED,_____ ADDENDA BY_____ DATE_____

CIMARRON
Energy Inc.

TITLE:
48" HIGH VOLUME ECD

DATE: | WO No.: | SHEET: 1 OF 1

DRAWN BY: TDS | REV. | DRAW NO.: 3500500

Attachment S
Emissions Calculations

Table 1

Facility Information
Yvonne Well Pad
Doddridge County, West Virginia
Antero Resources Corporation

Oil and Gas Site General Information

Administrative Information	
Company Name	Antero Resources Corporation
Facility/Well Name	Yvonne Well Pad
Nearest City/Town	West Union
API Number/SIC Code	1311
Latitude/Longitude	39.34847, -80.76965
County	Doddridge County

Technical Information	
Max Condensate Site Throughput (bbl/day):	615
Max Produced Water Site Throughput (bbl/day):	480
Are there any sour gas streams at this site?	No
Is this site currently operational/producing?	No

Equipment/Processes at Site	
Equipment/Process Types	**How many for this site?**
Fugitives	11
IC Engines	2
Gas Production Unit Heaters	11
Line Heaters	11
Condensate Tanks	10
Produced Water Tanks	4
Loading Jobs	2
Enclosed Combustors	3

Table 2

Uncontrolled/Controlled Emissions Summary
Yvonne Well Pad
Doddridge County, West Virginia
Antero Resources Corporation

Emission Source	VOC		NO_X		CO_{2e}		CO		SO_2		$PM_{2.5}$		PM_{10}		Lead		Total HAPs		Benzene		Xylenes		Formaldehyde	
	(lbs/hr)	(ton/yr)	(lbs/hr)	(ton/yr)	(lbs/hr)	(ton/yr)	(lbs/hr)	(ton/yr)	(lbs/hr)	(ton/yr)	(lbs/hr)	(ton/yr)	(lbs/hr)	(ton/yr)	(lbs/hr)	(ton/yr)	(lbs/hr)	(ton/yr)	(lbs/hr)	(ton/yr)	(lbs/hr)	(ton/yr)	(lbs/hr)	(ton/yr)
UNCONTROLLED (Fugitives, Storage Tanks, VRU engines, Gas Production Unit Heaters, Line Heaters)																								
Fugitive Emissions (Component Count, PCV and Hauling)[1]	3.8353	16.7986			109.023	477.52							6.9159	3.4502			0.3149	1.3791	0.0030	0.0133	0.0711	0.3113		
Flashing, Working and Breathing (F/W/B) Losses[2]	82.6335	361.9346			313.3621	1372.5260											7.4436	32.6029	0.0192	0.0842	0.1272	0.5571		
VRU Engine Emissions[3]	0.0373	0.1633	0.1250	0.5477	145.84	638.77	0.8253	3.6146	0.0007	0.0032	0.0120	0.0524	0.0120	0.0524			0.0289	0.1267	0.0020	0.0087	0.0002	0.0011	0.0258	0.1131
Gas Production Unit Heater Emissions[4]	0.0755	0.3309	1.3735	6.0159	1,648.19	7,219.08	1.1537	5.0534	0.0082	0.0361	0.1044	0.4572	0.1044	0.4572	6.87E-06	3.01E-05	0.0259	0.1132	2.88E-05	0.0001			0.0010	0.0045
Line Heater Emissions[4]	0.1007	0.4412	1.8313	8.0212	2,197.59	9,625.43	1.5383	6.7378	0.0110	0.0481	0.1392	0.6096	0.1392	0.6096	9.16E-06	4.01E-05	0.0345	0.1510	3.85E-05	0.0002			0.0014	0.0060
TOTALS:	**86.6823**	**379.6686**	**3.3299**	**14.5848**	**4414.0019**	**19333.3283**	**3.5173**	**15.4058**	**0.0200**	**0.0875**	**0.2555**	**1.1192**	**7.1714**	**4.5695**	**1.60E-05**	**7.02E-05**	**7.8477**	**34.3729**	**0.0243**	**0.1065**	**0.1985**	**0.8695**	**0.0282**	**0.1237**
TOTALS (Excluding Fugitives):	**82.8470**	**362.8700**	**3.3299**	**14.5848**	**4304.9789**	**18855.8077**	**3.5173**	**15.4058**	**0.0200**	**0.0875**	**0.2555**	**1.1192**	**0.2555**	**1.1192**	**1.60E-05**	**7.02E-05**	**7.5328**	**32.9938**	**0.0213**	**0.0932**	**0.1274**	**0.5582**	**0.0282**	**0.1237**
UNCONTROLLED (Truck Loading Emissions)																								
Truck Loading Emissions[5]	12.8456	6.0073			12.6858	5.8471											0.0913	0.0427	1.90E-04	8.86E-05	0.0058	0.0027		
CONTROLLED EMISSIONS																								
Enclosed Combustor Emissions (from F/W/B losses)[6]	1.6529	7.2396	2.4518	10.7388	420.4247	1841.4600	11.1632	48.8947	2.27E-05	0.0001	0.0083	0.0365	0.0111	0.0487	7.31E-07	3.20E-06	0.1489	0.6524	0.0004	0.0017	0.0025	0.0111	2.84E-06	1.24E-05
Controlled Fugitive Emissions from Hauling													3.4579	1.7251										
TOTALS:	**1.6529**	**7.2396**	**2.4518**	**10.7388**	**420.4247**	**1841.4600**	**11.1632**	**48.8947**	**2.27E-05**	**9.93E-05**	**0.0083**	**0.0365**	**3.4690**	**1.7738**	**7.31E-07**	**3.20E-06**	**0.1489**	**0.6524**	**0.0004**	**0.0017**	**0.0025**	**0.0111**	**2.84E-06**	**1.24E-05**
POTENTIAL TO EMIT[7]	**5.7017**	**30.9808**	**5.7816**	**25.3236**	**4521.0645**	**19808.1094**	**14.6805**	**64.3005**	**0.0200**	**0.0876**	**0.2639**	**1.1557**	**3.7246**	**2.8930**	**1.68E-05**	**7.34E-05**	**0.5530**	**2.4650**	**0.0055**	**0.0241**	**0.0739**	**0.3262**	**0.0282**	**0.1237**
POTENTIAL TO EMIT (Excluding Fugitives)	**1.8664**	**8.1750**	**5.7816**	**25.3236**	**4412.0415**	**19324.7417**	**14.6805**	**64.3005**	**0.0200**	**0.0876**	**0.2639**	**1.1557**	**0.2666**	**1.1679**	**1.68E-05**	**7.34E-05**	**0.2382**	**1.0433**	**0.0024**	**0.0107**	**0.0028**	**0.0122**	**0.0282**	**0.1237**

Enter any notes here:

1 - See Tables 4 and 5 for fugitive emission calculations; Table 12 for PM emissions from hauling.
2 - See Tables 6 and 7 for tanks emission calculations
3 - See Table 13 for VRU engine emissions
4 - See Table 9 for gas production unit heater and line heater emission calculations
5 - The maximum emission was calculated based on tank truck capacity of 200 barrels and actual fill rate of 50 minutes per tank truck. At a production rate of 615 barrels per day, VOC emissions would be 12.8456 pounds per hour when there are truck loading activities. Average hourly VOC emissions from truck loading is 1.3715 pound per hour.
6 - See Table 10 and 11 for enclosed combustion emission calculations.
7 - The hourly potential to emit is the sum of emissions from gas production unit heaters, line heaters, VRU engines, storage tanks, enclosed combustors, and fugitives. Does not include emissions from loading (see footnote 5). The total TPY PTE is the sum of all emissions.
PM 10 TPY is the sum of uncontrolled hauling and other PM10 sources.

Table 3

Permits Summary
Yvonne Well Pad
Doddridge County, West Virginia
Antero Resources Corporation

Pollutant		Emissions		Threshold Exceeded?		
		Uncontrolled	Controlled	Threshold	Uncontrolled	Controlled
VOC	lbs/hr	86.6823	5.7017	6	**Yes**	
	tons/yr	385.6759	30.9808	10	**Yes**	**Yes**
NO_X	lbs/hr	3.3299	5.7816	6		
	tons/yr	14.5848	25.3236	10	**Yes**	**Yes**
CO	lbs/hr	3.5173	14.6805	6		**Yes**
	tons/yr	15.4058	64.3005	10	**Yes**	**Yes**
SO_2	lbs/hr	0.0200	0.0200	6		
	tons/yr	0.0875	0.0876	10		
$PM_{2.5}$	lbs/hr	0.2555	0.2639	6		
	tons/yr	1.1192	1.1557	10		
PM_{10}	lbs/hr	7.1714	3.7246	6	**Yes**	
	tons/yr	4.5695	2.8930	10		
Lead	lbs/hr	1.60E-05	1.68E-05	6		
	tons/yr	7.02E-05	7.34E-05	10		
Total HAPs	lbs/hr	7.8477	0.5530	2	**Yes**	
	tons/yr	34.4156	2.4650	5	**Yes**	
Total TAPs	lbs/hr	0.0526	0.0337	1.14		
n-Hexane	lbs/hr	7.3994	0.3919			
	tons/yr	32.4475	1.7547			
Toluene	lbs/hr	0.1128	0.0245			
	tons/yr	0.4950	0.1081			
Ethylbenzene	lbs/hr	0.0842	0.0289			
	tons/yr	0.3698	0.1275			
Xylenes	lbs/hr	0.1985	0.0739			
	tons/yr	0.8722	0.3262			
Benzene	lbs/hr	0.0243	0.0055			
	tons/yr	0.1066	0.0241			

Enter any notes here:	1. Emissions are based on 98% Enclosed Combustor DRE operating 100% of the time. 2. Please see Attachment J - Fugitive Emissions Data Summary Sheet and Attachment T - Emission Points Summary Sheet for sitewide sources and breakdown of emission quantities.

Table 4

Fugitive Emissions
Yvonne Well Pad
Doddridge County, West Virginia
Antero Resources Corporation

VOC Type:	Condensate VOC
Emission Type:	Steady State (continuous)

Gas Weight Fraction From Analysis:	VOC frac	0.118
	Benzene frac	0.00E+00
	Toluene	0.00E+00
	Ethylbenzene	0.00E+00
	Xylenes	0.00E+00
	n-Hexane	0.010
	HAPs	0.010
	Methane	0.670

Gas					
Number	Component	Pollutant	Emission Factor (kg/hr of THC per component)	kg/hr	lb/yr
550	Valves	Gas VOC	0.004500	0.29	5,623.33
		Non VOC	0.004500	2.18	42,074.87
		HAPs	0.004500	0.03	485.36
		CO2e	0.004500	41.44	798,603.58
649	Connectors	VOC	0.000200	0.02	294.91
		Non-VOC	0.000200	0.11	2,206.59
		HAPs	0.000200	0.00	25.45
		CO2e	0.000200	2.17	41,882.32
143	Flanges	VOC	0.000390	0.01	126.71
		Non-VOC	0.000390	0.05	948.09
		HAPs	0.000390	0.00	10.94
		CO2e	0.000390	0.933748	17995.200620
			Total VOCs:	0.31	6044.95
			Total THC:	2.66	51274.51

Light Liquid Weight Fraction From Analysis:	VOC frac	0.976
	Benzene frac	0.001
	Toluene	0.007
	Ethylbenzene	0.009
	Xylenes	0.023
	n-hexane	0.040
	HAPs	0.079
	Methane	0.008

Light Liquid					
Number	Component	Pollutant	Emission Factor (kg/hr of THC per component)	kg/hr	lb/yr
572	Valves	Light Liquid VOC	0.002500	1.40	26,910.75
		Light Liquid Non-VOC	0.002500	0.03	648.21
		Light Liquid HAPs	0.002500	0.11	2,181.02
		CO2e	0.002500	0.28	5454.33
			Total VOC:	1.40	26,910.75
			Total THC:	1.43	27,558.96

Fugitive Total Emissions			
	Annual Emissions (lb/yr)	Annual Emissions (lb/hr)	Annual Emissions (tpy)
VOC	32,955.70	3.76	16.48
Ethylbenzene		0.03	0.12
Toluene		0.02	0.10
Xylenes		0.07	0.31
n-Hexane		0.18	0.81
TAPs (Benzene)		0.00	0.01
HAPs		0.31	1.35
CO_{2e}	863,935.43	98.62	431.97

Enter Notes Here:	Fugitive emissions based on an estimated component count Global Warming Potentials from EPA site Reference to Emission factors used: 1. Emission factors are for oil and gas production facilities (not refineries) come from the EPA's "Protocol for Equipment Leak Emission Estimates" November 1995, EPA 4531, R-95-017, Table 2-4. 2. Percent of speciated VOCs used in fugitive calculations are based on the total hydrocarbons, not of the total sample.

Table 5

Pneumatic Control Valve Emissions
Yvonne Well Pad
Doddridge County, West Virginia
Antero Resources Corporation

Number of PCVs	44
Bleed Rate (scf/day/PCV)	6.6
Total Bleed Rate (scf/day)	290.4

Component	Mol%	Molecular Weight (lb/lb-mole)	Component Flow (scf/day)	Component Moles (lb-moles)	Component Emissions (lbs/day)	(lbs/hr)	(tons/year)
H2S	0.00E+00	34.08	0.00E+00	0.00E+00	0.00E+00	0.00E+00	0.00E+00
Nitrogen	0.3903	14.01	1.1334312	0.00	0.04	0.00	0.01
Carbon Dioxide	0.1666	44.01	0.4838064	0.00	0.06	0.00	0.01
Methane	81.3211	16.04	236.1564744	0.62	9.98	0.42	1.82
Ethane	13.757	30.07	39.950328	0.11	3.17	0.13	0.58
Propane	2.5368	44.1	7.3668672	0.02	0.86	0.04	0.16
Isobutane	0.4674	58.12	1.3573296	0.00	0.21	0.01	0.04
n-Butane	0.7709	58.12	2.2386936	0.01	0.34	0.01	0.06
Isopentane	0.2029	72.15	0.5892216	0.00	0.11	0.00	0.02
n-Pentane	0.157	72.15	0.455928	0.00	0.09	0.00	0.02
2-Methylpentane	0.00E+00	86.18	0.00E+00	0.00E+00	0.00E+00	0.00E+00	0.00E+00
3-Methylpentane	0.00E+00	86.18	0.00E+00	0.00E+00	0.00E+00	0.00E+00	0.00E+00
n-Hexane	0.23	86.18	0.66792	0.00	0.15	0.01	0.03
Methylcyclopentane	0.00E+00	84.16	0.00E+00	0.00E+00	0.00E+00	0.00E+00	0.00E+00
Benzene	0.00E+00	78.11	0.00E+00	0.00E+00	0.00E+00	0.00E+00	0.00E+00
2-Methylhexane	0.00E+00	100.2	0.00E+00	0.00E+00	0.00E+00	0.00E+00	0.00E+00
3-Methylhexane	0.00E+00	100.2	0.00E+00	0.00E+00	0.00E+00	0.00E+00	0.00E+00
Heptane	0.00E+00	100.21	0.00E+00	0.00E+00	0.00E+00	0.00E+00	0.00E+00
Methylcyclohexane	0.00E+00	98.186	0.00E+00	0.00E+00	0.00E+00	0.00E+00	0.00E+00
Toluene	0.00E+00	92.14	0.00E+00	0.00E+00	0.00E+00	0.00E+00	0.00E+00
Octane	0.00E+00	114.23	0.00E+00	0.00E+00	0.00E+00	0.00E+00	0.00E+00
Ethylbenzene	0.00E+00	106.17	0.00E+00	0.00E+00	0.00E+00	0.00E+00	0.00E+00
m & p-Xylene	0.00E+00	106.16	0.00E+00	0.00E+00	0.00E+00	0.00E+00	0.00E+00
o-Xylene	0.00E+00	106.16	0.00E+00	0.00E+00	0.00E+00	0.00E+00	0.00E+00
Nonane	0.00E+00	128.2	0.00E+00	0.00E+00	0.00E+00	0.00E+00	0.00E+00
C10+	0.00E+00	174.28	0.00E+00	0.00E+00	0.00E+00	0.00E+00	0.00E+00

	lb/hr	tpy
VOC Emissions	0.0732	0.3207
Benzene Emissions	0.00E+00	0.00E+00
Toluene Emissions	0.00E+00	0.00E+00
Ethylbenzene Emissions	0.00E+00	0.00E+00
Xylene Emissions	0.00E+00	0.00E+00
n-Hexane Emissions	0.0063	0.0277
HAPs Emissions	0.0063	0.0277
TAPs Emissions	0.00E+00	0.00E+00
CO_{2e} emissions	10.4002	45.5529

Enter any notes here:	1. PCV bleed rate obtained from the user manual for PCV http://issuu.com/rmcprocesscontrols/docs/mizer-pilot-operation--parts---installation-manual 2. Emissions per hour= Mol % x no. of PCV x bleed rate x MW / 379.48 / 24

Table 6

Uncontrolled Flashing Emissions
Yvonne Well Pad
Doddridge County, West Virginia
Antero Resources Corporation

# Hours Operational	8760

	Condensate Tank Flashing Losses			Produced Water Tank Flashing Losses		
	Vapor Mass Fraction	Flashing Losses		Vapor Mass Fraction	Flashing Losses	
	wt%	lbs/hr	tpy	wt%	lbs/hr	tpy
Water	0.3270	0.4154	1.8194	2.7163	0.0646	0.2830
H2S	0.0000	0.0000	0.0000	0.0000	0.0000	0.0000
Nitrogen	0.0097	0.0123	0.0537	0.2617	0.0062	0.0273
Carbon Dioxide	0.2356	0.2993	1.3108	2.8043	0.0667	0.2922
Methane	8.5219	10.8255	47.4155	59.5335	1.4162	6.2028
Ethane	31.9036	40.5275	177.5106	26.0951	0.6207	2.7188
Propane	22.0411	27.9990	122.6357	4.9129	0.1169	0.5119
Isobutane	7.1652	9.1020	39.8667	0.8407	0.0200	0.0876
n-Butane	12.6842	16.1129	70.5744	1.7172	0.0408	0.1789
Isopentane	4.5416	5.7693	25.2695	0.4023	0.0096	0.0419
n-Pentane	3.6871	4.6838	20.5151	0.1254	0.0030	0.0131
2-Methylpentane	0.2964	0.3765	1.6493	0.0135	0.0003	0.0014
3-Methylpentane	0.1990	0.2528	1.1075	0.0217	0.0005	0.0023
n-Hexane	5.5895	7.1004	31.0996	0.1243	0.0030	0.0130
Methylcyclopentane	0.0919	0.1168	0.5114	0.0161	0.0004	0.0017
Benzene	0.0146	0.0186	0.0814	0.0225	0.0005	0.0023
2-Methylhexane	0.3169	0.4025	1.7631	0.0102	0.0002	0.0011
3-Methylhexane	0.2585	0.3284	1.4385	0.0100	0.0002	0.0010
Heptane	0.5339	0.6783	2.9709	0.0088	0.0002	0.0009
Methylcyclohexane	0.3549	0.4509	1.9748	0.0609	0.0014	0.0063
Toluene	0.0683	0.0867	0.3798	0.0986	0.0023	0.0103
Octane	0.7814	0.9927	4.3478	0.0052	0.0001	0.0005
Ethylbenzene	0.0422	0.0537	0.2351	0.0599	0.0014	0.0062
m & p-Xylene	0.0395	0.0502	0.2199	0.0510	0.0012	0.0053
o-Xylene	0.0555	0.0705	0.3088	0.0814	0.0019	0.0085
Nonane	0.2183	0.2773	1.2145	0.0016	0.0000	0.0002
C10+	0.0221	0.0280	0.1227	0.0050	0.0001	0.0005
Total VOCs	59.002	74.95	328.3	8.589	0.2043	0.8949
Total CO_{2e}		270.94	1,186.7		35.47	155.4
Total TAPs (Benzene)		0.0186	0.0814		0.0005	0.0023
Toluene		0.0867	0.3798		0.0023	0.0103
Ethylbenzene		0.0537	0.2351		0.0014	0.0062
Xylenes		0.1207	0.5287		0.0031	0.0138
n-Hexane		7.100	31.100		0.0030	0.0130
Total HAPs		7.380	32.324		0.0104	0.0456
Total	100.00	127.03	556.4	100.00	2.379	10.42

Enter any notes here:	Vapor mass fractions and Flashing losses from Promax output

Table 7

Uncontrolled Working and Breathing Losses
Yvonne Well Pad
Doddridge County, West Virginia
Antero Resources Corporation

Condensate Tank Information	
Number of Tanks	10
Maximum Working Losses (lbs/hr)	7.2908
Maximum Breathing Losses (lbs/hr)	6.1201
# Hours Operational	8760

	Condensate Tank W/B Losses						
	Vapor Mass Fraction	Working Losses		Breathing Losses		Max W/B Losses	
	wt%	lbs/hr	tpy	lbs/hr	tpy	lbs/hr	tpy
H2S	0.00E+00	0.00E+00	0.00E+00	0.00E+00	0.00E+00	0.00E+00	0.00E+00
Nitrogen	0.0005	3.30E-05	1.45E-04	0.0000	0.0001	0.0001	0.0003
Carbon Dioxide	0.2116	0.0154	0.0676	0.0130	0.0567	0.0284	0.1243
Methane	2.0496	0.1494	0.6545	0.1254	0.5494	0.2749	1.2039
Ethane	41.9784	3.0606	13.4052	2.5691	11.2528	5.6297	24.6580
Propane	24.6610	1.7980	7.8751	1.5093	6.6107	3.3073	14.4858
Isobutane	7.4447	0.5428	2.3774	0.4556	1.9957	0.9984	4.3730
n-Butane	13.1605	0.9595	4.2026	0.8054	3.5278	1.7649	7.7305
Isopentane	4.2954	0.3132	1.3717	0.2629	1.1514	0.5760	2.5231
n-Pentane	3.4331	0.2503	1.0963	0.2101	0.9203	0.4604	2.0166
2-Methylpentane	0.2641	0.0193	0.0843	0.0162	0.0708	0.0354	0.1551
3-Methylpentane	0.1772	0.0129	0.0566	0.0108	0.0475	0.0238	0.1041
n-Hexane	0.3524	0.0257	0.1125	0.0216	0.0945	0.0473	0.2070
Methylcyclopentane	0.0752	0.0055	0.0240	0.0046	0.0202	0.0101	0.0442
Benzene	0.0008	5.99E-05	0.0003	0.0001	0.0002	0.0001	0.0005
2-Methylhexane	0.0177	1.29E-03	0.0057	0.0011	0.0048	0.0024	0.0104
3-Methylhexane	0.2305	0.0168	0.0736	0.0141	0.0618	0.0309	0.1354
Heptane	0.4570	0.0333	0.1460	0.0280	0.1225	0.0613	0.2685
Methylcyclohexane	0.3078	0.0224	0.0983	0.0188	0.0825	0.0413	0.1808
Toluene	0.0081	5.93E-04	2.60E-03	0.0005	0.0022	0.0011	0.0048
Octane	0.6512	0.0475	0.2080	0.0399	0.1746	0.0873	0.3825
Ethylbenzene	0.0100	7.33E-04	3.21E-03	0.0006	0.0027	0.0013	0.0059
m & p-Xylene	0.0111	8.07E-04	3.53E-03	0.0007	0.0030	0.0015	0.0065
o-Xylene	0.0139	1.01E-03	0.0044	0.0009	0.0037	0.0019	0.0082
Nonane	0.1758	0.0128	0.0562	0.0108	0.0471	0.0236	0.1033
C10+	0.0120	8.78E-04	0.0038	0.0007	0.0032	0.0016	0.0071
Total VOCs	55.760	4.0653	17.806	3.4126	14.9470	7.4779	32.753
Total CO_{2e}		3.7512	16.4302	3.1489	13.7920	6.9001	30.222
Total TAPs (Benzene)		5.99E-05	2.62E-04	0.0001	0.0002	0.0001	0.0005
Toluene		5.93E-04	2.60E-03	0.0005	0.0022	0.0011	0.0048
Ethylbenzene		7.33E-04	3.21E-03	0.0006	0.0027	0.0013	0.0059
Xylenes		1.82E-03	0.0080	0.0015	0.0067	0.0033	0.0147
n-Hexane		0.0257	0.1125	0.0216	0.0945	0.0473	0.2070
Total HAPs		0.0289	0.1266	0.0243	0.1062	0.0532	0.2328
Total	100.00	7.2908	31.9336	6.1201	26.8062	13.4109	58.740

Table 7

Uncontrolled Working and Breathing Losses
Yvonne Well Pad
Doddridge County, West Virginia
Antero Resources Corporation

Produced Water Tank Information	
Number of Tanks	4
Maximum Working Losses (lbs/hr)	0.0501
Maximum Breathing Losses (lbs/hr)	0.0166

	Produced Water Tank W/B Losses						
	Vapor Mass Fraction	Working Losses		Breathing Losses		Max W/B Losses	
	wt%	lbs/hr	tpy	lbs/hr	tpy	lbs/hr	tpy
H2S	0.00E+00	0.00E+00	0.00E+00	0.00E+00	0.00E+00	0.00E+00	0.00E+00
Nitrogen	0.0050	2.52E-06	1.11E-05	8.38E-07	3.67E-06	3.36E-06	1.47E-05
Carbon Dioxide	3.6218	0.0018	0.0080	0.0006	0.0026	0.0024	0.0106
Methane	3.1872	0.0016	0.0070	0.0005	0.0023	0.0021	0.0093
Ethane	1.6480	0.0008	0.0036	0.0003	0.0012	0.0011	0.0048
Propane	0.0483	2.42E-05	0.0001	8.05E-06	3.52E-05	3.23E-05	0.0001
Isobutane	0.0021	1.04E-06	4.55E-06	3.45E-07	1.51E-06	1.38E-06	6.06E-06
n-Butane	0.0038	1.91E-06	8.37E-06	6.34E-07	2.78E-06	2.54E-06	1.11E-05
Isopentane	0.0002	1.16E-07	5.07E-07	3.84E-08	1.68E-07	1.54E-07	6.75E-07
n-Pentane	0.0000	1.06E-08	4.66E-08	3.53E-09	1.55E-08	1.42E-08	6.20E-08
2-Methylpentane	1.25E-06	6.28E-10	2.75E-09	2.09E-10	9.14E-10	8.37E-10	3.67E-09
3-Methylpentane	4.47E-06	2.24E-09	9.82E-09	7.45E-10	3.26E-09	2.99E-09	1.31E-08
n-Hexane	2.80E-07	1.41E-10	6.15E-10	4.67E-11	2.04E-10	1.87E-10	8.20E-10
Methylcyclopentane	3.97E-06	1.99E-09	8.73E-09	6.62E-10	2.90E-09	2.65E-09	1.16E-08
Benzene	2.99E-05	1.50E-08	6.57E-08	4.98E-09	2.18E-08	2.00E-08	8.75E-08
2-Methylhexane	1.26E-08	6.32E-12	2.77E-11	2.10E-12	9.19E-12	8.42E-12	3.69E-11
3-Methylhexane	2.11E-07	1.06E-10	4.64E-10	3.52E-11	1.54E-10	1.41E-10	6.18E-10
Heptane	6.06E-08	3.04E-11	1.33E-10	1.01E-11	4.42E-11	4.05E-11	1.77E-10
Methylcyclohexane	4.81E-06	2.41E-09	1.06E-08	8.00E-10	3.51E-09	3.21E-09	1.41E-08
Toluene	5.75E-05	2.88E-08	1.26E-07	9.57E-09	4.19E-08	3.84E-08	1.68E-07
Octane	4.56E-09	2.29E-12	1.00E-11	7.59E-13	3.33E-12	3.05E-12	1.33E-11
Ethylbenzene	1.94E-05	9.72E-09	4.26E-08	3.23E-09	1.41E-08	1.29E-08	5.67E-08
m & p-Xylene	1.15E-05	5.76E-09	2.52E-08	1.91E-09	8.38E-09	7.67E-09	3.36E-08
o-Xylene	3.27E-05	1.64E-08	7.18E-08	5.44E-09	2.38E-08	2.18E-08	9.56E-08
Nonane	4.15E-10	2.08E-13	9.10E-13	6.90E-14	3.02E-13	2.77E-13	1.21E-12
C10+	6.92E-10	3.47E-13	1.52E-12	1.15E-13	5.05E-13	4.62E-13	2.02E-12
Total VOCs	0.0546	2.74E-05	0.0001	9.10E-06	3.98E-05	3.65E-05	0.0002
Total CO_{2e}		0.0418	0.1829	0.0139	0.0607	0.0556	0.2436
Total TAPs (Benzene)		1.50E-08	6.57E-08	4.98E-09	2.18E-08	2.00E-08	8.75E-08
Toluene		2.88E-08	1.26E-07	9.57E-09	4.19E-08	3.84E-08	1.68E-07
Ethylbenzene		9.72E-09	4.26E-08	3.23E-09	1.41E-08	1.29E-08	5.67E-08
Xylenes		2.21E-08	9.70E-08	7.35E-09	3.22E-08	2.95E-08	1.29E-07
n-Hexane		1.41E-10	6.15E-10	4.67E-11	2.04E-10	1.87E-10	8.20E-10
Total HAPs		7.58E-08	3.32E-07	2.52E-08	1.10E-07	1.01E-07	4.42E-07
Total	100.00	0.0501	0.2196	0.0166	0.0729	0.0668	0.2925

Enter any notes here:	Vapor mass fractions, working losses and breathing losses from Promax output

Table 8

Loading Emissions
Yvonne Well Pad
Doddridge County, West Virginia
Antero Resources Corporation

Annual Loading	Oil Truck Loading	Water Truck Loading
RVP	6.09	1.0332
Annual Average Temp (F)	65.08	65.08
S (saturation factor)	0.6	0.6
P (true vapor pressure)	4.13	0.38
M (MW of vapor)	38.80	18.47
Collection Efficiency (%)	0.00	0.00
Total Hydrocarbon Loading Loss (lb/10^3 gal)*	2.29	0.10
Maximum Throughput (gallons/hr)**	10,080	10,080
Average Throughput (gallons/yr)	9,427,950	7,358,400
Total Hydrocarbon Loading Emissions (lbs/hr)	23.04	1.00
Total Hydrocarbon Loading Emissions (tpy)	10.77	0.37

	Condensate Tank Loading Losses			Produced Water Tank Loading Losses		
	Vapor Mass Fraction	Loading Losses		Vapor Mass Fraction	Loading Losses	
	wt%	lbs/hr	tpy	wt%	lbs/hr	tpy
H2S	0.0000	0.00E+00	0.00E+00	0.00E+00	0.00E+00	0.00E+00
Nitrogen	0.0005	1.04E-04	4.88E-05	0.0050	5.04E-05	1.84E-05
Carbon Dioxide	0.2116	0.0487	0.0228	3.6218	0.0362	0.0132
Methane	2.0496	0.4722	0.2208	3.1872	0.0319	0.0116
Ethane	41.9784	9.6704	4.5224	1.6480	0.0165	0.0060
Propane	24.6610	5.6810	2.6568	0.0483	4.84E-04	1.76E-04
Isobutane	7.4447	1.7150	0.8020	0.0021	2.07E-05	7.56E-06
n-Butane	13.1605	3.0317	1.4178	0.0038	3.81E-05	1.39E-05
Isopentane	4.2954	0.9895	0.4627	0.0002	2.31E-06	8.43E-07
n-Pentane	3.4331	0.7909	0.3699	0.0000	2.12E-07	7.74E-08
2-Methylpentane	0.2641	0.0608	0.0285	1.25E-06	1.25E-08	4.58E-09
3-Methylpentane	0.1772	0.0408	0.0191	4.47E-06	4.47E-08	1.63E-08
n-Hexane	0.3524	0.0812	0.0380	2.80E-07	2.80E-09	1.02E-09
Methylcyclopentane	0.0752	0.0173	0.0081	3.97E-06	3.98E-08	1.45E-08
Benzene	0.0008	0.0002	0.0001	0.0000	2.99E-07	1.09E-07
2-Methylhexane	0.0177	0.0041	0.0019	1.26E-08	1.26E-10	4.60E-11
3-Methylhexane	0.2305	0.0531	0.0248	2.11E-07	2.11E-09	7.72E-10
Heptane	0.4570	0.1053	0.0492	6.06E-08	6.06E-10	2.21E-10
Methylcyclohexane	0.3078	0.0709	0.0332	4.81E-06	4.81E-08	1.76E-08
Toluene	0.0081	0.0019	0.0009	0.0001	5.75E-07	2.10E-07
Octane	0.6512	0.1500	0.0702	4.56E-09	4.56E-11	1.67E-11
Ethylbenzene	0.0100	0.0023	0.0011	1.94E-05	1.94E-07	7.08E-08
m & p-Xylene	0.0111	0.0025	0.0012	1.15E-05	1.15E-07	4.19E-08
o-Xylene	0.0139	0.0032	0.0015	3.27E-05	3.27E-07	1.19E-07
Nonane	0.1758	0.0405	0.0189	4.15E-10	4.15E-12	1.51E-12
C10+	0.0120	0.0028	0.0013	6.92E-10	6.92E-12	2.53E-12
Total VOCs	55.7597	12.8451	6.0071	0.0546	5.47E-04	1.99E-04
Total CO_{2e}		11.8525	5.5429		0.8333	0.3042
Total TAPs (Benzene)		0.0002	0.0001		2.99E-07	1.09E-07
Toluene		0.0019	0.0009		5.75E-07	2.10E-07
Ethylbenzene		0.0023	0.0011		1.94E-07	7.08E-08
Xylenes		0.0058	0.0027		4.42E-07	1.61E-07
n-Hexane		0.0812	0.0380		2.80E-09	1.02E-09
Total HAPs		0.0913	0.0427		1.51E-06	5.52E-07
Total	100.0000	23.0365	10.7732	100.0000	1.0003	0.3651

Enter any notes here

Vapor mass fractions and loading losses from Promax output
Using equation L_L = 12.46 SPM/T from AP-42, Chapter 5, Section 5.2-4
MW was obtained by Promax; RVP was taken from laboratory reports
Annual Average Temp (F) obtained from Charleston, WV (preset in Promax)
S (saturation factor) is based on submerged loading, dedicated service as it was most representative
True vapor pressure (TVP) equation from AP-42, Chapter 7, Figure 7.1-13a
** Maximum throughput in gallons per hour obtained from actual transfer rate of 200 barrels in 50 minutes. (10,080 gal/hr = 200 bbl / 50 min x 42 gal/bbl x 60 min/hr)
Loading emissions are vented to the atmosphere.

Table 9

Gas Production Unit Heater and Line Heater Emissions
Yvonne Well Pad
Doddridge County, West Virginia
Antero Resources Corporation

Gas Production Unit Heater Emissions

Number of Units	11
GPU Heater Rating (MMBtu/hr)	1.50
Operating hours/year	8760
Fuel Heat Value (Btu/scf)	1,201

Pollutant	Emission Factors (lb/MMscf)	lb/hr	tpy
NOx	100	1.373	6.016
CO	84	1.154	5.053
CO_2	120,000	1648.191	7219.076
Lead	0.0005	6.87E-06	3.01E-05
N_2O	2.2	0.030	0.132
PM (Total)	7.6	0.104	0.457
SO_2	0.6	0.008	0.036
TOC	11	0.151	0.662
Methane	2.3	0.032	0.138
VOC	5.5	0.076	0.331
HAPS			
2-Methylnaphthalene	2.40E-05	3.30E-07	1.44E-06
Benzene	0.0021	2.88E-05	1.26E-04
Dichlorobenzene	0.0012	1.65E-05	7.22E-05
Fluoranthene	3.00E-06	4.12E-08	1.80E-07
Fluorene	2.80E-06	3.85E-08	1.68E-07
Formaldehyde	0.0750	1.03E-03	0.0045
Hexane	1.8000	0.0247	0.1083
Naphthalene	6.10E-04	8.38E-06	3.67E-05
Phenanathrene	1.70E-05	2.33E-07	1.02E-06
Toluene	0.0034	4.67E-05	2.05E-04

Line Heater Emissions

Number of Units	11
Line Heater Rating (MMBtu/hr)	2.00
Operating hours/year	8760
Fuel Heat Value (Btu/scf)	1,201

Pollutant	Emission Factors (lb/MMscf)	lb/hr	tpy
NOx	100	1.831	8.021
CO	84	1.538	6.738
CO_2	120,000	2197.588	9625.434
Lead	0.0005	9.16E-06	4.01E-05
N_2O	2.2	0.040	0.176
PM (Total)	7.6	0.139	0.610
SO_2	0.6	0.011	0.048
TOC	11	0.201	0.882
Methane	2.3	0.042	0.184
VOC	5.5	0.101	0.441
HAPS			
2-Methylnaphthalene	2.40E-05	4.40E-07	1.93E-06
Benzene	0.0021	3.85E-05	1.68E-04
Dichlorobenzene	0.0012	2.20E-05	9.63E-05
Fluoranthene	3.00E-06	5.49E-08	2.41E-07
Fluorene	2.80E-06	5.13E-08	2.25E-07
Formaldehyde	0.0750	0.0014	0.0060
Hexane	1.8000	0.0330	1.44E-01
Naphthalene	6.10E-04	1.12E-05	4.89E-05
Phenanathrene	1.70E-05	3.11E-07	1.36E-06
Toluene	3.40E-03	6.23E-05	2.73E-04

	lb/hr	tpy
TOTAL Uncontrolled VOC	0.176	0.772
TOTAL Uncontrolled HAPs	0.060	0.264
TOTAL Uncontrolled TAPs (Benzene)	6.73E-05	2.95E-04
TOTAL Uncontrolled Toluene	1.09E-04	4.77E-04
TOTAL Uncontrolled Hexane	0.0577	0.2527
TOTAL Uncontrolled TAPs (Formaldehyde)	0.0024	0.0105
TOTAL CO_{2e} Emissions	3,868.63	16,944.61

Enter any notes here:
All Emission Factors based off AP-42 Sec 1.4 Natural Gas Combustion

Table 10

Enclosed Combustor Emissions
Yvonne Well Pad
Doddridge County, West Virginia
Antero Resources Corporation

General Information	
Unit Name:	EC001, EC002, EC003

Pollutant	Emission Factor[1] (lb/MMscf)
Nox - Pilot Gas	100
CO - Pilot Gas	84
PM10	7.6
PM2.5	5.7
SO_2	0.6
CO_2	120,000
VOC	5.5
benzene	2.10E-03
Hexane	1.80E+00
Toluene	3.40E-03
Formaldehyde	7.50E-02
N_2O	2.20
Lead	5.00E-04

Pollutant	Emission Factor[2] (lb/MMBtu)
NO_x	0.068
CO	0.31

Constants	
Btu/MMBtu	1,000,000
scf/MMscf	1,000,000
lb/ton	2,000
H_2S molecular weight	34.08
SO_2 molecular weight	64.06
seconds/hour	3,600
inches/ft	12

Destruction Efficiency	
VOC percent destruction efficiency (%)	98
H_2S percent destruction efficiency (%)	98

Enclosed Combustor operating hours	8760
No. of Enclosed Combustors	3
Maximum Design Heat Input Per Enclosed Combustor (MMBtu/hr)	12

Stream Information							
	1	2	3	4	5	6	Total
Stream Sent to Enclosed/Vapor Combustor	pilot(s)	added fuel stream(s)	Oil Tank Flash Emissions	Water Tank Flash Emissions	Oil Tank W/B Emissions	Water Tank W/B Emissions	-
Maximum Expected Hourly Volumetric Flow Rate of Stream (scf/hr)	37.8	--	1,242.47	48.88	131.17	1.37	1,461.69
Maximum Expected Annual Volumetric Flow Rate of Stream (scf/yr)	331,128.00	--	10,884,004.61	428,216.49	1,149,043.74	12,020.34	12,804,413.18
Heating Content (Btu/ft3)	1,201		2,146.82	1,161.59	2,227.76	102.72	2,063.70

Mass Flow Rates of the Vapors Sent to this Control Device, Hourly Basis (lb/hr)							
	1	2	3	4	5	6	Total
Stream Sent to Enclosed Combustor/Vapor Combustor	pilot(s)	added fuel stream(s)	Oil Tank Flash Emissions	Water Tank Flash Emissions	Oil Tank W/B Emissions	Water Tank W/B Emissions	-
H2S	-	-	0.000	0.000	0.000	0.000	0.000
Total VOC	-	-	74.951	0.204	7.478	0.000	82.63
Benzene	-	-	0.019	0.001	0.000	0.000	0.019
Toluene	-	-	0.087	0.002	0.001	0.000	0.090
Ethylbenzene	-	-	0.054	0.001	0.001	0.000	0.056
Xylenes	-	-	0.121	0.003	0.003	0.000	0.127
n-Hexane	-	-	7.100	0.003	0.047	0.000	7.151
HAPs	-	-	7.380	0.010	0.053	0.000	7.444
Total Mass Flow	-	-	127.031	2.379	13.411	0.067	142.888
Mass Flow Rates of the Vapors Sent to this Control Device, Annual Basis (tpy)							
H2S	-	-	0.000	0.000	0.000	0.000	0.000
Total VOC	-	-	328.286	0.895	32.753	0.000	361.935
Benzene	-	-	0.081	0.002	0.000	0.000	0.084
Toluene	-	-	0.380	0.010	0.005	0.000	0.395
Ethylbenzene	-	-	0.235	0.006	0.006	0.000	0.247
Xylenes	-	-	0.529	0.014	0.015	0.000	0.557
n-Hexane	-	-	31.100	0.013	0.207	0.000	31.320
HAP	-	-	32.324	0.046	0.233	0.000	32.603
Total Mass Flow	-	-	556.397	10.419	58.740	0.292	625.848

Table 10

Enclosed Combustor Emissions
Yvonne Well Pad
Doddridge County, West Virginia
Antero Resources Corporation

Controlled Emissions							
Hourly (lb/hr)							
	1	2	3	4	5	6	Total
Stream Sent to Enclosed Combustor/Vapor Combustor	pilot(s)	added fuel stream(s)	Oil Tank Flash Emissions	Water Tank Flash Emissions	Oil Tank W/B Emissions	Water Tank W/B Emissions	-
NOx[3]	0.004	-	2.448				2.45
CO[3]	0.003	-	11.160				11.16
PM2.5	0.000	-	0.007	0.000	0.001	0.000	0.01
PM10	0.000	-	0.009	0.000	0.001	0.000	0.01
H2S	0.000	-	0.000	0.000	0.000	0.000	0.00
SO_2	0.000	-	0.000	0.000	0.000	0.000	0.00
CO_2	4.536	-	-	-	-	-	4.54
Total VOC	0.000	-	1.499	0.004	0.150	0.000	1.65
Benzene	0.000	-	0.000	0.000	0.000	0.000	0.00
Toluene	0.000	-	0.002	0.000	0.000	0.000	0.00
Ethylbenzene	0.000	-	0.001	0.000	0.000	0.000	0.00
Xylenes	0.000	-	0.002	0.000	0.000	0.000	0.00
n-Hexane	0.000	-	0.142	0.000	0.001	0.000	0.14
HAP	0.000	-	0.148	0.000	0.001	0.000	0.15
N_2O	0.000	-	0.003	0.000	0.000	0.000	0.00
Lead	0.000	-	0.000	0.000	0.000	0.000	0.00
Formaldehyde	0.000	-	-	-	-	-	0.00
Annual (tpy)							
	1	2	3	4	5	6	Total
Stream Sent to Enclosed Combustor/Vapor Combustor	pilot(s)	added fuel stream(s)	Oil Tank Flash Emissions	Water Tank Flash Emissions	Oil Tank W/B Emissions	Water Tank W/B Emissions	-
NOx	0.017	-	10.722				10.74
CO	0.014	-	48.881				48.89
PM2.5	0.001	-	0.031	0.001	0.003	0.000	0.04
PM10	0.001	-	0.041	0.002	0.004	0.000	0.05
H_2S	0.000	-	0.000	0.000	0.000	0.000	0.00
SO_2	0.000	-	0.000	0.000	0.000	0.000	0.00
CO_2	19.868	-	-	-	-	-	19.87
Total VOC	0.001	-	6.566	0.018	0.655	0.000	7.24
Benzene	0.000	-	0.002	0.000	0.000	0.000	0.00
Toluene	0.000	-	0.008	0.000	0.000	0.000	0.01
Ethylbenzene	0.000	-	0.005	0.000	0.000	0.000	0.00
Xylenes	0.000	-	0.011	0.000	0.000	0.000	0.01
n-Hexane	0.000	-	0.622	0.000	0.004	0.000	0.63
HAP	0.000	-	0.646	0.001	0.005	0.000	0.65
N_2O	0.000	-	0.012	0.000	0.001	0.000	0.01
Lead	0.000	-	0.000	0.000	0.000	0.000	0.00
Formaldehyde	0.000	-	-	-	-	-	0.00

Enclosed Combustor/Vapor Combustor Total Emissions		
	Hourly Emissions (lb/hr)	Annual Emissions (tpy)
Total VOC	1.65	7.24
NOx	2.45	10.74
CO	11.16	48.89
PM2.5	0.01	0.04
PM10	0.01	0.05
H_2S	1.21E-05	5.28E-05
SO_2	2.27E-05	9.93E-05
Benzene (TAPs)	0.00	0.00
Toluene	0.00	0.01
Ethylbenzene	0.00	0.00
Xylenes	0.00	0.01
Hexanes	0.14	0.63
Formaldehyde (TAPs)	2.84E-06	1.24E-05
HAPs	0.15	0.65
CO_2e	420.42	1841.46
N_2O	0.00	0.01
Lead	7.31E-07	3.20E-06

Enter any notes here as needed

1. Emission Factors from AP-42 Tables 1.4-1, 1.4-2, and 1.4.3
2. Emission Factors from AP-42 Tables 13.5-1 and 13.5-2 for industrial flares
3. Worst case emissions based on enclosed combustors total maximum design heat input

Table 11

Enclosed Combustor GHG Emissions
Yvonne Well Pad
Doddridge County, West Virginia
Antero Resources Corporation

Enclosed Combustor CO_2 and CH_4 Emissions

Components	Mole fraction of oil flash gas constituents[a]	Volume of oil flash gas sent to Enclosed Combustor *scf/year*	Mole fraction of water flash gas constituents[a]	Volume of water flash gas sent to Enclosed Combustor *scf/year*	Mole fraction of oil tank vapors constituents[a]	Volume of oil tank vapor sent to Enclosed Combustor *scf/year*	Mole fraction of water tank vapors constituents[a]	Volume of water tank vapors sent to Enclosed Combustor *scf/year*	Component volume of gas sent to Enclosed Combustor *scf/year*	Number of carbon atoms	Combustion Efficiency	Combusted CO_2 Volume[b] *scf/year*	Uncombusted CO_2 and CH_4 Volume[b] *scf/year*	Volume GHGs Emitted *scf/year*
CO_2	0.002	10,884,005	0.0128	428,216	0.0019	1,149,044	0.015	12,020	29,632	1	0	--	29,632	30,321,404
Methane	0.199	10,884,005	0.7451	428,216	0.0496	1,149,044	0.037	12,020	2,542,928	1	0.98	2,492,069	50,859	50,859
Ethane	0.398	10,884,005	0.1742	428,216	0.5416	1,149,044	0.010	12,020	5,023,491	2	0.98	9,846,043	--	
Propane	0.187	10,884,005	0.0224	428,216	0.2170	1,149,044	0.000	12,020	2,296,954	3	0.98	6,753,044	--	
i-Butane	0.046	10,884,005	0.0029	428,216	0.0497	1,149,044	0.000	12,020	561,061	4	0.98	2,199,360	--	
n-Butane	0.082	10,884,005	0.0059	428,216	0.0879	1,149,044	0.000	12,020	993,419	4	0.98	3,894,202	--	
Pentane	0.043	10,884,005	0.0015	428,216	0.0416	1,149,044	0.000	12,020	513,455	5	0.98	2,515,931	--	
Hexane	0.026	10,884,005	0.0004	428,216	0.0036	1,149,044	0.000	12,020	292,183	6	0.98	1,718,036	--	
Benzene	0.000	10,884,005	0.0001	428,216	0.0000	1,149,044	0.000	12,020	793	6	0.98	4,662	--	
Heptanes	0.005	10,884,005	0.0001	428,216	0.0031	1,149,044	0.000	12,020	53,176	7	0.98	364,784	--	
Toluene	0.000	10,884,005	0.0002	428,216	0.0000	1,149,044	0.000	12,020	3,152	7	0.98	21,623	--	
Octane	0.004	10,884,005	0.0001	428,216	0.0034	1,149,044	0.000	12,020	46,632	8	0.98	365,593	--	
Ethyl benzene	0.000	10,884,005	0.0001	428,216	0.0000	1,149,044	0.000	12,020	1,713	8	0.98	13,432	--	
Xylenes	0.000	10,884,005	0.0003	428,216	0.0001	1,149,044	0.000	12,020	3,862	8	0.98	30,277	--	
Nonane	0.001	10,884,005	0.0000	428,216	0.0005	1,149,044	0.000	12,020	7,556	9	0.98	66,640	--	
Decane plus	0.000	10,884,005	0.0000	428,216	0.0000	1,149,044	0.000	12,020	620	10	0.98	6,077	--	
											Subtotal	**30,291,773**	--	

Pollutant	Volume Emitted *scf/year*	Density of GHG[c] *lb/scf*	Conversion Factor *lb/ton*	GWF	Emissions[c] *lbs/hr*	*(tons/yr)*
CO_2	30,321,404	0.12	2000	1	401.388	1758.081
CH_4	50,859	0.09	2000	25	0.540	2.366
				CO_2e Emissions	**414.892**	**1817.226**

GHG Emissions Summary

Notes

a Flashing/Working/Breathing Losses from ProMax output reports

b 40 CFR 98.233 (n)(4): Eqns: W-19, W-20 and W-21

c 40 CFR 98.233(v) Eqn W-36 - density at 60F and 14.7 psia

Table 12

Haul Road Emissions
Yvonne Well Pad
Doddridge County, West Virginia
Antero Resources Corporation

	PM	PM10
Particle Size Multiplier (k)	0.8	0.36
Silt Content of Road Surface Material (s) (%)	5.1	5.1
Days per Year with Precipitation > 0.01 in (p)	150	150
Control Efficiency for Watering [1] (%)	50	50

Tanker Truck Trip Calculation	
Condensate Production (bbl/day)	615
PW Production (bbl/day)	480
Truck Capacity (bbl)	200

Pick Up Truck Trip Calculation	
No of Trips Per day	2
Trips Per Year	730

	# of Wheels	Mean Vehicle Weight (W) (tons)	Mean Vehicle Speed (S) (mph)	Miles Per Trip (miles)	Maximum Trips per Hour	Maximum Trips per Year	Vehicle Miles Travelled (miles/hr)	Vehicle Miles Travelled (miles/year)	PM (lbs/VMT)	PM10 (lbs/VMT)
Tanker Trucks Condensate	10	40	10	2.0000	1	1123	2.0000	2246.0000	3.8175	1.7179
Tanker Trucks PW	10	40	10	2.0000	1	876	2.0000	1752.0000	3.8175	1.7179
Pick Up Truck	4	3	10	0.2840	1	730	0.2840	207.3200	0.3467	0.1560

	Uncontrolled Emissions						Controlled Emissions					
	PM			PM10			PM			PM10		
	(lbs/hr)	(lbs/year)	(tpy)	(lbs/hr)	(lbs/year)	(tpy)	(lbs/hr)	(lbs/year)	(tpy)	(lbs/hr)	(lbs/year)	(tpy)
Tanker Trucks Condensate	7.6351	8574.1710	4.2871	3.4358	3858.3770	1.9292	3.8175	4287.0855	2.1435	1.7179	1929.1885	0.9646
Tanker Trucks PW	7.6351	6688.3115	3.3442	3.4358	3009.7402	1.5049	3.8175	3344.1557	1.6721	1.7179	1504.8701	0.7524
Pick Up Truck	0.0985	71.8736	0.0359	0.0443	32.3431	0.0162	0.0492	35.9368	0.0180	0.0222	16.1716	0.0081
Total Emissions	15.3686	15,334.3561	7.6672	6.9159	6,900.4603	3.4502	7.6843	7,667.1781	3.8336	3.4579	3,450.2301	1.7251

Enter any notes here:	1 EPA, AP-42, Volume I, Section 13.2.2 Unpaved Roads (11/06); assume 2:1 moisture ratio Section 13.2.2 Unpaved Roads (11/06) Source: Attachment L, Fugitive Emissions from Unpaved Haul Roads, Rev 03/2007, West Virginia Department of Environmental Protection

Table 13

Vapor Recovery Unit Emissions
Yvonne Well Pad
Doddridge County, West Virginia
Antero Resources Corporation

Ford MSG-425 2.5L Engine

Power (hp) [1]	76
Fuel consumption (lbs/BHP-hr) [1]	0.3864
Heat Content of Fuel (Btu/scf)	1201.3172
Density of NG (lb/scf)	0.056
Operating Hours/year	8760
No. of Engines	2

Pollutant	Emission Factors (g/hp-hr)	Emission Factors (lb/MMBtu)	lb/hr	tpy
NOx[2]	0.3731		0.1250	0.5477
CO[2]	2.4627		0.8253	3.6146
CO_2		110.000	138.5936	607.04
$PM_{2.5}$		9.500E-03	0.0120	0.0524
PM_{10}		9.500E-03	0.0120	0.0524
PM (Total)		9.910E-03	0.0125	0.0547
SO_2		5.880E-04	0.0007	0.0032
TOC		0.358	0.4511	1.9756
Methane		0.230	0.2898	1.2693
VOC[3]		0.0296	0.0373	0.1633
HAPS				
Benzene		0.0016	0.0020	0.0087
Ethylbenzene		2.48E-05	3.12E-05	1.37E-04
Formaldehyde		0.0205	0.0258	0.1131
Naphthalene		9.71E-05	1.22E-04	0.0005
Toluene		5.58E-04	0.0007	0.0031
Xylene		1.95E-04	2.46E-04	0.0011

	lb/hr	tpy
TOTAL Uncontrolled VOC	0.0373	0.1633
TOTAL Uncontrolled NOx	0.1250	0.5477
TOTAL Uncontrolled HAPs	0.0289	0.1267
TOTAL Uncontrolled TAPs (Benzene)	0.0020	0.0087
TOTAL Uncontrolled Toluene	0.0007	0.0031
TOTAL Uncontrolled Ethylbenzene	0.0000	0.0001
TOTAL Uncontrolled Xylene	0.0002	0.0011
TOTAL Uncontrolled TAPs (Formaldehyde)	0.0258	0.1131
TOTAL CO_{2e} Emissions	145.8382	638.7714

Enter Any Notes Here:

1. Engines were manufactured in 2015 for MSG-425. Engine rating was taken from manufacturer engine specifications. Please see copies of manufacturer engine specification in Appendix N.

2. Emission factors used for the 76 HP engine NOX and CO emissions are certification levels indicated on MSG-425 CARB document. See MSG-425 CARB document in Appendix N.
3. Emission factors for all other contaminants including VOCs were obtained from AP-42, Section 3.2 "Natural Gas-fired Reciprocating Engines", Table 3.2-3.
4. Hours of operation was calculated based on the 100% operation of the VRU.

Table 14

Change in Regulated Air Pollutants Emissions
Yvonne Well Pad
Doddridge County, West Virginia
Antero Resources Corporation

	Potential Emissions		Previous Permit Application Emissions		Change in Emissions	
Pollutant	**Hourly PTE**	**Yearly PTE**	**Hourly PTE**	**Yearly PTE**	**Hourly PTE**	**Yearly PTE**
PM	7.9390	4.9491	0.9665	1.6542	6.97E+00	3.2949
PM10	3.7246	2.8930	0.4807	0.9452	3.2438	1.9479
VOC (uncontrolled)	86.6823	385.6759	114.6273	508.2657	-27.9450	-122.5898
CO	14.6805	64.3005	0.9212	4.0347	13.7593	60.2658
NOx	5.7816	25.3236	1.0966	4.8032	4.6850	20.5203
SO2	0.0200	0.0876	0.0055	0.0239	1.45E-02	6.36E-02
Pb	1.68E-05	7.34E-05	5.48E-06	2.40E-05	1.13E-05	4.94E-05
HAPs	0.5530	2.4650	0.6149	2.7451	-0.0619	-0.2801
TAPs	0.0337	0.1478	0.0032	0.0139	3.05E-02	0.1338

Notes:
1. Change in emissions due to the increase in production, removal of (1) Abutec flare, (11) 1.0 MMBtu/hr GPUs, and the addition of (4) condensate tanks, (2) produced water tanks, (11) 1.5 MMBtu/hr GPUs, (11) line heaters, (3) Cimarron enclosed combustors, and (2) HP VRU compressor engines.
2. Change in permit from G70A to G70C.

Bryan Research & Engineering, Inc.

ProMax® 3.2

with

TSWEET® & PROSIM®

Copyright © BRE Group, Ltd. 2002-2011. All Rights Reserved.

Simulation Report	
Client Name:	Antero Resources Corporation
Location:	West Virginia
Job:	Yvonne Well Pad

Project Name:	PROMAX SCENARIO 3
File Name:	V:\AirQuality\ANTERO RESOURCES\ProMax\Antero WV_Old_2 Ph Separator\ProMax Model\PROMAX SCENARIO 3.pmx
ProMax Version:	4.0.16071.0

Report Created:	8/26/2016 15:59

Properties	LP Separator Gas	
Pressure(Total)	50	psig
Temperature(Total)	70	°F

Properties	Total gas to sale	
Pressure(Total)	169	psig
Temperature(Total)	69.999	°F
Std Vapor Volumetric Flow(Total)	123	MMSCFD

Names	Units	Oil	Water
Std Liquid Volumetric Flow	bbl/d	828.82#	514.63#

Names	Units	Gas
Std Vapor Volumetric Flow	MMSCFD	122.56#

Names	Units	Sales Oil	Produced Water
Std Liquid Volumetric Flow	bbl/d	614.99	480
Reid Vapor Pressure	psi	8.8404	1.0332

Properties	HP Separator Gas	
Pressure(Total)	169*	psig
Temperature(Total)	70*	°F

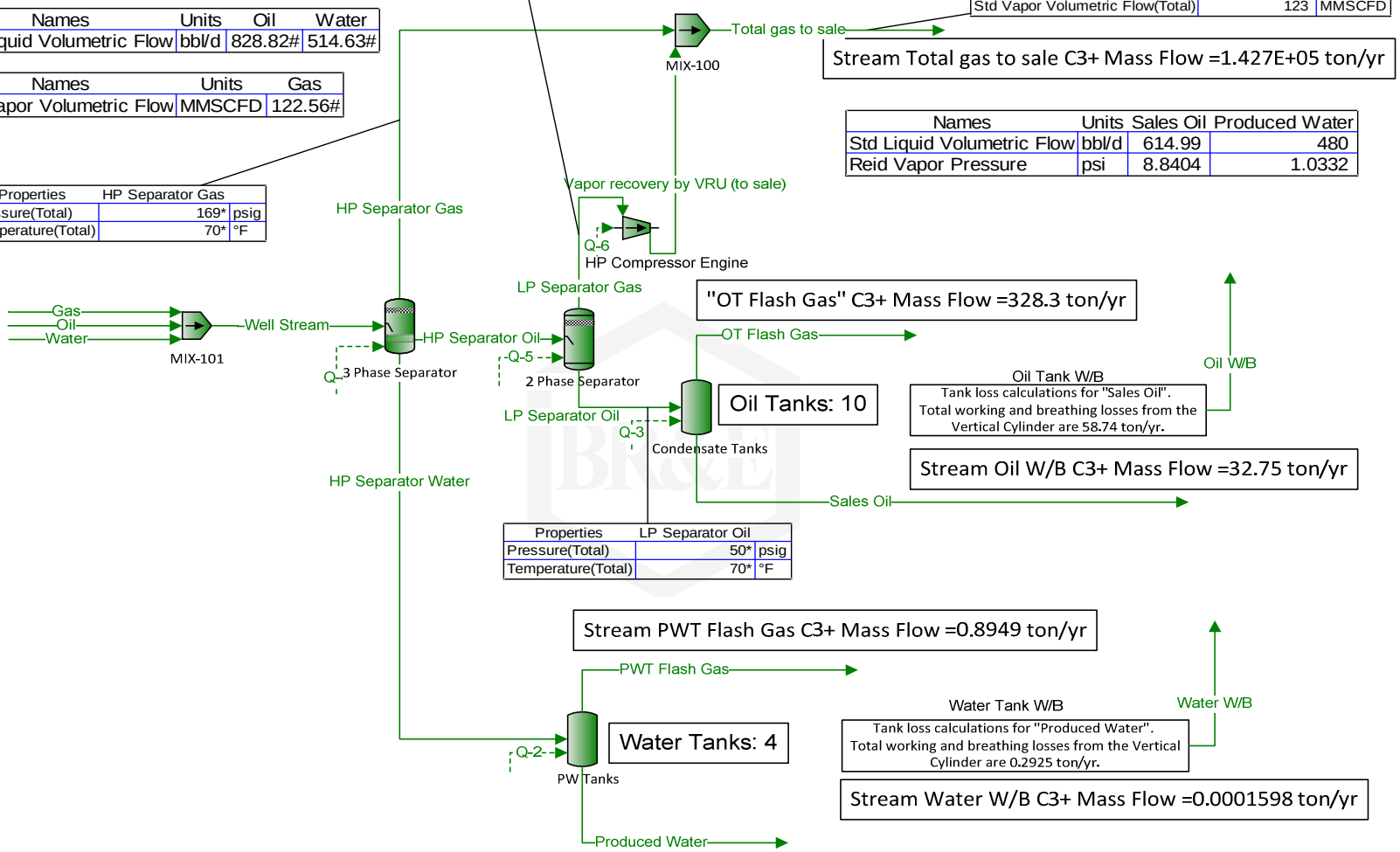

Properties	LP Separator Oil	
Pressure(Total)	50*	psig
Temperature(Total)	70*	°F

Process Streams		HP Separator Gas	HP Separator Water	HP Separator Oil	OT Flash Gas	Sales Oil	Gas	Water	Oil	Produced Water	PWT Flash Gas	Oil W/B	Water W/B	Well Stream	LP Separator Oil	LP Separator Gas	r recovery by VRU (to	Total gas to sale
Phase: Total	Status	Solved	Solved	Solved	Solved	Solved	Solved	Solved	Solved	Solved	Solved	Solved	Solved	Solved	Solved	Solved	Solved	Solved
Mole Fraction		%	%	%	%	%	%	%	%	%	%	%	%	%	%	%	%	%
Water		0.207572	99.9672	0.0834134	0.680150	0.0228151	0	100	0	99.9967	3.03281	0.000610355	93.7740	2.98694	0.0629893	0.421127	0.421127	0.207625
H2S		0	0	0	0	0	0	0	0	0	0	0	0	0	0	0	0	0
Nitrogen		0.388973	5.93504E-05	0.00754164	0.0129157	1.96876E-05	0.3903	0	0.0219998	2.20052E-06	0.187901	0.000627455	0.00331912	0.376528	0.000807848	0.118885	0.118885	0.388906
Carbon Dioxide		0.165926	0.00101075	0.0277221	0.200583	0.00273776	0.1666	0	0.0139999	0.000621113	1.28167	0.186560	1.51969	0.160748	0.0148294	0.240904	0.240904	0.165945
Methane		81.0328	0.0245007	4.75389	19.9047	0.0938449	81.3211	0	4.97995	0.00179817	74.6436	4.95690	3.66871	78.4539	1.30462	61.7878	61.7878	81.0281
Ethane		13.7166	0.00593644	4.84589	39.7568	1.17953	13.757	0	5.23595	0.000627378	17.4558	54.1656	1.01211	13.2972	3.53724	26.4845	26.4845	13.7198
Propane		2.54452	0.000738468	3.29940	18.7296	2.11227	2.5368	0	5.28795	5.68777E-05	2.24100	21.6986	0.0202418	2.47682	3.12787	6.13570	6.13570	2.54541
Isobutane		0.469316	9.36379E-05	1.52103	4.61929	1.34182	0.4674	0	1.72798	5.14560E-06	0.290952	4.96964	0.000658197	0.460675	1.54213	1.17213	1.17213	0.469491
n-Butane		0.777225	0.000194580	3.64976	8.17733	3.46438	0.7709	0	4.22196	1.38340E-05	0.594273	8.78513	0.00121086	0.767682	3.75242	1.95217	1.95217	0.777517
Isopentane		0.210710	3.59566E-05	2.36912	2.35871	2.48897	0.2029	0	3.18197	1.84596E-06	0.112151	2.30988	5.90833E-05	0.213939	2.48101	0.519013	0.519013	0.210787
n-Pentane		0.167610	1.08674E-05	2.52468	1.91492	2.70037	0.157	0	3.73996	2.30182E-07	0.0349735	1.84619	5.42677E-06	0.172876	2.65236	0.413453	0.413453	0.167671
2-Methylpentane		0.0111574	9.86008E-07	0.394154	0.128888	0.435070	0	0	2.17098	2.85033E-08	0.00314813	0.118905	2.68566E-07	0.0124611	0.416357	0.0270198	0.0270198	0.0111613
3-Methylpentane		0.00748313	1.65418E-06	0.294208	0.0865472	0.325510	0	0	1.47799	1.13471E-07	0.00506568	0.0797597	9.58536E-07	0.00848342	0.310906	0.0181071	0.0181071	0.00748577
n-Hexane		0.210269	8.95520E-06	10.6863	2.43040	11.8796	0.23	0	4.66295	1.30466E-07	0.0290143	0.158656	6.00678E-08	0.248575	11.3021	0.504047	0.504047	0.210342
Methylcyclopentane		0.00349222	1.31632E-06	0.177120	0.0409210	0.196847	0	0	0.718993	1.43663E-07	0.00385561	0.0346643	8.72150E-07	0.00412692	0.187318	0.00849469	0.00849469	0.00349346
Benzene		0.000593055	2.07162E-05	0.0338890	0.00701431	0.0377279	0	0	0.124999	1.89599E-05	0.00579354	0.000408151	7.07098E-06	0.000717475	0.0358508	0.00145071	0.00145071	0.000593268
2-Methylhexane		0.0104950	6.35439E-07	1.15345	0.118497	1.29354	0	0	2.61697	1.26906E-08	0.00204750	0.00686952	2.32324E-09	0.0150211	1.22173	0.0244835	0.0244835	0.0104985
3-Methylhexane		0.00853918	6.24931E-07	1.04429	0.0966833	1.17196	0	0	2.20698	1.48419E-08	0.00200588	0.0892438	3.89598E-08	0.0126677	1.10624	0.0199092	0.0199092	0.00854200
Heptane		0.0178205	5.40179E-07	2.83174	0.199670	3.18284	0	0	5.08495	5.82734E-09	0.00175686	0.176969	1.11689E-08	0.0291869	3.00052	0.0410827	0.0410827	0.0178263
Methylcyclohexane		0.0118432	4.25850E-06	1.90722	0.135450	2.14362	0	0	3.39797	4.62412E-07	0.0124813	0.121613	9.04315E-07	0.0195038	2.02088	0.0277605	0.0277605	0.0118472
Toluene		0.00240625	5.95953E-05	0.483249	0.0277573	0.543662	0	0	0.760992	5.30617E-05	0.0215344	0.00342332	1.15174E-05	0.00436799	0.512132	0.00567532	0.00567532	0.00240706
Octane		0.0236298	2.82078E-07	11.9448	0.256333	13.4717	0	0	12.7579	1.30313E-09	0.000923139	0.221188	7.37521E-10	0.0732284	12.6640	0.0524853	0.0524853	0.0236370
Ethylbenzene		0.00134137	2.84232E-05	0.831418	0.0149114	0.937929	0	0	0.836992	2.49819E-05	0.0113394	0.00367228	3.37159E-06	0.00480421	0.881517	0.00303524	0.00303524	0.00134179
m-Xylene		0.00125994	1.66613E-05	0.848831	0.0139471	0.957671	0	0	0.835992	1.37288E-05	0.00965527	0.00404336	1.99803E-06	0.00479847	0.899994	0.00284118	0.00284118	0.00126033
o-Xylene		0.00176721	5.51943E-05	1.37882	0.0195901	1.55586	0	0	1.31099	5.05205E-05	0.0154171	0.00508025	5.68626E-06	0.00752488	1.46197	0.00398285	0.00398285	0.00176776
Nonane		0.00607378	7.54627E-08	9.69219	0.0637744	10.9424	0	0	8.14292	3.56303E-10	0.000246936	0.0531953	5.97063E-11	0.0467392	10.2776	0.0129608	0.0129608	0.00607549
C10+		0.000494726	1.99179E-07	33.2159	0.00461502	37.5173	0	0	24.4798	2.97721E-08	0.000557008	0.00260916	7.13703E-11	0.140510	35.2247	0.000935096	0.000935096	0.000494836
Molar Flow		lbmol/h	lbmol/h	lbmol/h	lbmol/h	lbmol/h	lbmol/h	lbmol/h	lbmol/h	lbmol/h	lbmol/h	lbmol/h	lbmol/h	lbmol/h	lbmol/h	lbmol/h	lbmol/h	lbmol/h
Water		28.0343	388.698	0.0490678	0.0230581	0.0118821	0	416.781	0	388.694	0.00358668	2.10971E-06	0.00339081	416.781	0.0349403	0.0141275	0.0141275	28.0484
H2S		0	0	0	0	0	0	0	0	0	0	0	0	0	0	0	0	0
Nitrogen		52.5340	0.000230770	0.00443636	0.000437861	1.02533E-05	52.5210	0	0.0176198	8.55356E-06	0.000222216	2.16882E-06	1.20018E-07	52.5386	0.000448114	0.00398824	0.00398824	52.5380
Carbon Dioxide		22.4096	0.00393004	0.0163075	0.00680007	0.00142582	22.4187	0	0.0112126	0.00241431	0.00151573	0.000644852	5.49511E-05	22.4299	0.00822589	0.00808159	0.00808159	22.4177
Methane		10944.1	0.0952650	2.79647	0.674801	0.0488744	10943.0	0	3.98848	0.00698961	0.0882754	0.0171337	0.000132658	10947.0	0.723675	2.07279	2.07279	10946.2
Ethane		1852.54	0.0230824	2.85059	1.34782	0.614298	1851.22	0	4.19351	0.00243866	0.0206437	0.187225	3.65972E-05	1855.41	1.96211	0.888474	0.888474	1853.43
Propane		343.658	0.00287135	1.94087	0.634961	1.10007	341.366	0	4.23516	0.000221088	0.00265026	0.0750021	7.31930E-07	345.602	1.73503	0.205834	0.205834	343.864
Isobutane		63.3849	0.000364088	0.894742	0.156601	0.698820	62.8960	0	1.38396	2.00013E-05	0.000344087	0.0171777	2.38000E-08	64.2800	0.855421	0.0393214	0.0393214	63.4242
n-Butane		104.970	0.000756576	2.14696	0.277224	1.80425	103.737	0	3.38140	5.37739E-05	0.000702802	0.0303661	4.37840E-08	107.118	2.08147	0.0654894	0.0654894	105.036
Isopentane		28.4581	0.000139808	1.39363	0.0799639	1.29625	27.3034	0	2.54846	7.17536E-06	0.000132633	0.00798417	2.13642E-09	29.8519	1.37622	0.0174113	0.0174113	28.4755
n-Pentane		22.6370	4.22553E-05	1.48514	0.0649189	1.40635	21.1268	0	2.99537	8.94736E-07	4.13606E-05	0.00638143	1.96229E-10	24.1222	1.47127	0.0138701	0.0138701	22.6509
2-Methylpentane		1.50689	3.83385E-06	0.231860	0.00436951	0.226584	0	0	1.73875	1.10794E-07	3.72306E-06	0.000411000	9.71118E-12	1.73875	0.230954	0.000906432	0.000906432	1.50780
3-Methylpentane		1.01066	6.43187E-06	0.173067	0.00293408	0.169526	0	0	1.18373	4.41069E-07	5.99080E-06	0.000275692	3.46601E-11	1.18373	0.172460	0.000607438	0.000607438	1.01126
n-Hexane		28.3985	3.48201E-05	6.28619	0.0823943	6.18689	30.9501	0	3.73460	5.07129E-07	3.43130E-05	0.000548400	2.17202E-12	34.6847	6.26928	0.0169092	0.0169092	28.4154
Methylcyclopentane		0.471652	5.11818E-06	0.104190	0.00138728	0.102518	0	0	0.575847	5.58430E-07	4.55975E-06	0.000119819	3.15364E-11	0.575847	0.103905	0.000284971	0.000284971	0.471937
Benzene		0.0800968	8.05499E-05	0.0199352	0.000237796	0.0196487	0	0	0.100113	7.36983E-05	6.85159E-06	1.41079E-06	2.55682E-10	0.100113	0.0198865	4.86670E-05	4.86670E-05	0.0801455
2-Methylhexane		1.41744	2.47075E-06	0.678514	0.00401722	0.673676	0	0	2.09596	4.93294E-08	2.42142E-06	2.37448E-05	8.40069E-14	2.09596	0.677693	0.000821346	0.000821346	1.41826
3-Methylhexane		1.15328	2.42989E-06	0.614300	0.00327771	0.610354	0	0	1.76759	5.76915E-08	2.37220E-06	0.000308475	1.40876E-12	1.76759	0.613632	0.000667891	0.000667891	1.15395
Heptane		2.40681	2.10035E-06	1.66577	0.00676912	1.65762	0	0	4.07258	2.26513E-08	2.07770E-06	0.000611700	4.03860E-13	4.07258	1.66439	0.00137820	0.00137820	2.40818
Methylcyclohexane		1.59952	1.65582E-05	1.12192	0.00459197	1.11640	0	0	2.72146	1.79743E-06	1.47607E-05	0.000420361	3.26995E-11	2.72146	1.12099	0.000931280	0.000931280	1.60045
Toluene		0.324983	0.000231722	0.284271	0.000941015	0.283139	0	0	0.609485	0.000206255	2.54671E-05	1.18328E-05	4.16461E-10	0.609485	0.284080	0.000190390	0.000190390	0.325173
Octane		3.19140	1.09679E-06	7.02649	0.00869009	7.01604	0	0	10.2179	5.06537E-09	1.09173E-06	0.000764545	2.66683E-14	10.2179	7.02473	0.00176072	0.00176072	3.19316
Ethylbenzene		0.181162	0.000110516	0.489081	0.000505519	0.488473	0	0	0.670353	9.71063E-05	1.34102E-05	1.26934E-05	1.21915E-10	0.670353	0.488979	0.000101823	0.000101823	0.181264
m-Xylene		0.170164	6.47834E-05	0.499323	0.000472830	0.498755	0	0	0.669552	5.33648E-05	1.14186E-05	1.39760E-05	7.22477E-11	0.669552	0.499228	9.53129E-05	9.53129E-05	0.170260
o-Xylene		0.238676	0.000214610	0.811089	0.000664134	0.810291	0	0	1.04998	0.000196377	1.82327E-05	1.75601E-05	2.05612E-10	1.04998	0.810956	0.000133612	0.000133612	0.238810
Nonane		0.820312	2.93418E-07	5.70142	0.00216205	5.69882	0	0	6.52173	1.38498E-09	2.92033E-07	0.000183871	2.15895E-15	6.52173	5.70098	0.000434795	0.000434795	0.820747
C10+		0.0668167	7.74458E-07	19.5392	0.000156456	19.5390	0	0	19.6060	1.15726E-07	6.58731E-07	9.01865E-06	2.58071E-15	19.6060	19.5392	3.13696E-05	3.13696E-05	0.0668481
Mass Fraction		%	%	%	%	%	%	%	%	%	%	%	%	%	%	%	%	%
Water		0.189295	99.9617	0.0129113	0.327005	0.00322426	0	100	0	99.9947	2.71634	0.000283404	91.4834	2.67532	0.00930316	0.316460	0.316460	0.189333
H2S		0	0	0	0	0	0	0	0	0	0	0	0	0	0	0	0	0
Nitrogen		0.551587	9.22836E-05	0.00181520	0.00965588	4.32638E-06	0.556097	0	0.00575811	3.42169E-06	0.261693	0.000453035	0.00503510	0.524411	0.000185532	0.138918	0.138918	0.551463
Carbon Dioxide		0.369649	0.00246902	0.0104825	0.235586	0.000945165	0.372913	0	0.00575660	0.00151729	2.80427	0.211616	3.62177	0.351722	0.00535048	0.442236	0.442236	0.369671
Methane		65.8053	0.0218165	0.655258	8.52189	0.0118099	66.3530	0	0.746434	0.00160122	59.5335	2.04958	3.18716	62.5740	0.171585	41.3464	41.3464	65.7979
Ethane		20.8783	0.00990787	1.25195	31.9036	0.278223	21.0392	0	1.47099	0.00104713	26.0951	41.9784	1.64803	19.8787	0.871982	33.2182	33.2182	20.8820
Propane		5.67976	0.00180743	1.25004	22.0411	0.730652	5.68942	0	2.17860	0.000139216	4.91287	24.6610	0.0483351	5.42998	1.13075	11.2856	11.2856	5.68145
Isobutane		1.38082	0.000302085	0.759577	7.16517	0.611790	1.38171	0	0.938377	1.66008E-05	0.840738	7.44475	0.00207165	1.33120	0.734827	2.84173	2.84173	1.38126
n-Butane		2.28674	0.000627733	1.82263	12.6842	1.57955	2.27891	0	2.29272	4.46315E-05	1.71722	13.1605	0.00381114	2.21836	1.78804	4.73287	4.73287	2.28748
Isopentane		0.769561	0.000143993	1.46861	4.54164	1.40868	0.744556	0	2.14497	7.39266E-06	0.402283	4.29537	0.000230841	0.767409	1.46751	1.56196	1.56196	0.769800
n-Pentane		0.612148	4.35202E-05	1.56505	3.68714	1.52833	0.576123	0	2.52111	9.21831E-07	0.125449	3.43312	2.12026E-05	0.620115	1.56886	1.24428	1.24428	0.612338
2-Methylpentane		0.0486713	4.71627E-06	0.291838	0.296419	0.294109	0	0	1.74797	1.36342E-07	0.0134876	0.264099	1.25329E-06	0.0533885	0.294152	0.0971246	0.0971246	0.0486859
3-Methylpentane		0.0326434	7.91226E-06	0.217836	0.199042	0.220046	0	0	1.19001	5.42772E-07	0.0217029	0.177154	4.47312E-06	0.0363465	0.219652	0.0650873	0.0650873	0.0326531
n-Hexane		0.917248	4.28345E-05	7.91229	5.58946	8.03064	1.00809	0	3.75439	6.24065E-07	0.124306	0.352389	2.80313E-07	1.06500	7.98481	1.81183	1.81183	0.917518
Methylcyclopentane		0.0148776	6.14892E-06	0.128074	0.0919091	0.129957	0	0	0.565358	6.71119E-07	0.0161322	0.0751915	3.97478E-06	0.0172678	0.129242	0.0298205	0.0298205	0.0148821
Benzene		0.00234499	8.98178E-05	0.0227441	0.0146221	0.0231177	0	0	0.0912259	8.22058E-05	0.0224988	0.000821715	2.99099E-05	0.00278633	0.0229582	0.00472675	0.00472675	0.00234570
2-Methylhexane		0.0532340	3.53415E-06	0.993040	0.316877	1.01677	0	0	2.45003	7.05846E-08	0.0101999	0.0177413	1.26063E-08	0.0748316	1.00363	0.102332	0.102332	0.0532488
3-Methylhexane		0.0433133	3.47571E-06	0.899059	0.258545	0.921198	0	0	2.06619	8.25497E-08	0.00999258	0.230482	2.11403E-07	0.0631079	0.908757	0.0832133	0.0832133	0.0433253

Heptane		0.0903911	3.00434E-06	2.43794	0.533947	2.50182	0	0	4.76056	3.24113E-08	0.00875205	0.457042	6.06044E-08	0.145403	2.46488	0.171711	0.171711	0.0904156
Methylcyclohexane		0.0588638	2.32082E-05	1.60895	0.354926	1.65106	0	0	3.11720	2.52017E-06	0.0609268	0.307762	4.80827E-06	0.0952091	1.62673	0.113695	0.113695	0.0588804
Toluene		0.0112230	0.000304781	0.382564	0.0682538	0.392948	0	0	0.655114	0.000271377	0.0986443	0.00812964	5.74662E-05	0.0200092	0.386852	0.0218120	0.0218120	0.0112262
Octane		0.136635	1.78846E-06	11.7232	0.781427	12.0715	0	0	13.6160	8.26254E-09	0.00524251	0.651208	4.56213E-09	0.415874	11.8595	0.250078	0.250078	0.136670
Ethylbenzene		0.00720871	0.000167490	0.758392	0.0422483	0.781118	0	0	0.830230	0.000147216	0.0598505	0.0100485	1.93836E-05	0.0253578	0.767246	0.0134412	0.0134412	0.00721059
m-Xylene		0.00677109	9.81805E-05	0.774274	0.0395162	0.797560	0	0	0.829238	8.09029E-05	0.0509616	0.0110639	1.14869E-05	0.0253275	0.783328	0.0125818	0.0125818	0.00677284
o-Xylene		0.00949727	0.000325245	1.25771	0.0555043	1.29574	0	0	1.30040	0.000297714	0.0813735	0.0139011	3.26909E-05	0.0397182	1.27245	0.0176376	0.0176376	0.00949972
Nonane		0.0394332	5.37207E-07	10.6804	0.218288	11.0092	0	0	9.75777	2.53656E-09	0.00157455	0.175845	4.14681E-10	0.298033	10.8066	0.0693378	0.0693378	0.0394422
C10+		0.00448527	1.98004E-06	51.1134	0.0220586	52.7100	0	0	40.9636	2.95975E-07	0.00495969	0.0120442	6.92201E-10	1.25116	51.7208	0.00698579	0.00698579	0.00448603
Mass Flow		**lb/h**	**lb/h**	**lb/h**	**lb/h**	**lb/h**	**lb/h**	**lb/h**	**lb/h**	**lb/h**	**lb/h**	**lb/h**	**lb/h**	**lb/h**	**lb/h**	**lb/h**	**lb/h**	**lb/h**
Water		505.046	7002.50	0.883970	0.415399	0.214060	0	7508.43	0	7002.44	0.0646151	3.80071E-05	0.0610864	7508.43	0.629459	0.254511	0.254511	505.300
H2S		0	0	0	0	0	0	0	0	0	0	0	0	0	0	0	0	0
Nitrogen		1471.66	0.00646464	0.124277	0.0122660	0.000287230	1471.29	0	0.493591	0.000239614	0.00622503	6.07561E-05	3.36210E-06	1471.79	0.0125532	0.111724	0.111724	1471.77
Carbon Dioxide		986.237	0.172959	0.717684	0.299268	0.0627498	986.634	0	0.493461	0.106253	0.0667065	0.0283796	0.00241837	987.127	0.362017	0.355667	0.355667	986.592
Methane		175571	1.52828	44.8622	10.8255	0.784066	175553	0	63.9851	0.112130	1.41615	0.274867	0.00212817	175617	11.6095	33.2527	33.2527	175604
Ethane		55704.1	0.694065	85.7145	40.5275	18.4713	55664.4	0	126.095	0.0733283	0.620737	5.62968	0.00110044	55790.5	58.9989	26.7156	26.7156	55730.8
Propane		15153.8	0.126614	85.5837	27.9990	48.5083	15052.8	0	186.752	0.00974901	0.116865	3.30726	3.22749E-05	15239.5	76.5073	9.07638	9.07638	15162.9
Isobutane		3684.07	0.0211616	52.0044	9.10200	40.6169	3655.66	0	80.4385	0.00116252	0.0199991	0.998409	1.38331E-06	3736.09	49.7189	2.28545	2.28545	3686.35
n-Butane		6101.11	0.0439738	124.786	16.1129	104.867	6029.41	0	196.534	0.00312546	0.0408484	1.76495	2.54482E-06	6225.94	120.980	3.80639	3.80639	6104.92
Isopentane		2053.22	0.0100870	100.549	5.76930	93.5231	1969.91	0	183.869	0.000517694	0.00956931	0.576048	1.54140E-07	2153.78	99.2924	1.25620	1.25620	2054.47
n-Pentane		1633.23	0.00304867	107.151	4.68382	101.466	1524.27	0	216.112	6.45541E-05	0.00298412	0.460412	1.41577E-08	1740.39	106.150	1.00071	1.00071	1634.23
2-Methylpentane		129.857	0.000330384	19.9806	0.376544	19.5260	0	0	149.838	9.54775E-06	0.000320836	0.0354181	8.36864E-10	149.838	19.9025	0.0781121	0.0781121	129.935
3-Methylpentane		87.0937	0.000554268	14.9141	0.252846	14.6089	0	0	102.008	3.80093E-05	0.000516259	0.0237579	2.98685E-09	102.008	14.8618	0.0523462	0.0523462	87.1460
n-Hexane		2447.25	0.00300064	541.715	7.10036	533.157	2667.14	0	321.830	4.37021E-05	0.00295693	0.0472585	1.87174E-10	2988.97	540.258	1.45716	1.45716	2448.71
Methylcyclopentane		39.6940	0.000430743	8.76860	0.116753	8.62787	0	0	48.4630	4.69972E-05	0.000383746	0.0100839	2.65409E-09	48.4630	8.74462	0.0239830	0.0239830	39.7179
Benzene		6.25651	0.00629190	1.55717	0.0185747	1.53480	0	0	7.81997	0.00575671	0.000535190	0.000110199	1.99718E-08	7.81997	1.55337	0.00380147	0.00380147	6.26031
2-Methylhexane		142.030	0.000247574	67.9885	0.402533	67.5036	0	0	210.019	4.94291E-06	0.000242631	0.00237927	8.41765E-12	210.019	67.9061	0.0823005	0.0823005	142.112
3-Methylhexane		115.561	0.000243480	61.5540	0.328433	61.1587	0	0	177.116	5.78080E-06	0.000237699	0.0309098	1.41161E-10	177.116	61.4871	0.0669240	0.0669240	115.628
Heptane		241.167	0.000210459	166.913	0.678279	166.097	0	0	408.080	2.26970E-06	0.000208190	0.0612935	4.04675E-11	408.080	166.775	0.138098	0.138098	241.305
Methylcyclohexane		157.051	0.00162578	110.157	0.450867	109.614	0	0	267.209	0.000176483	0.00144930	0.0412736	3.21064E-09	267.209	110.065	0.0914387	0.0914387	157.142
Toluene		29.9434	0.0213505	26.1922	0.0867036	26.0880	0	0	56.1570	0.0190040	0.00234650	0.00109026	3.83720E-08	56.1570	26.1747	0.0175422	0.0175422	29.9609
Octane		364.548	0.000125285	802.625	0.992656	801.431	0	0	1167.17	5.78610E-07	0.000124706	0.0873329	3.04629E-12	1167.17	802.424	0.201124	0.201124	364.749
Ethylbenzene		19.2331	0.0117330	51.9232	0.0536685	51.8588	0	0	71.1681	0.0103093	0.00142370	0.00134759	1.29431E-08	71.1681	51.9124	0.0108100	0.0108100	19.2439
m-Xylene		18.0655	0.00687773	53.0107	0.0501979	52.9503	0	0	71.0830	0.00566547	0.00121225	0.00148377	7.67018E-09	71.0830	53.0005	0.0101189	0.0101189	18.0756
o-Xylene		25.3391	0.0227840	86.1093	0.0705078	86.0246	0	0	111.471	0.0208484	0.00193567	0.00186427	2.18288E-08	111.471	86.0951	0.0141849	0.0141849	25.3532
Nonane		105.209	3.76324E-05	731.236	0.277294	730.903	0	0	836.445	1.77630E-07	3.74548E-05	0.0235825	2.76896E-13	836.445	731.180	0.0557646	0.0557646	105.265
C10+		11.9669	0.000138705	3499.47	0.0280213	3499.44	0	0	3511.44	2.07265E-05	0.000117979	0.00161524	4.62205E-13	3511.44	3499.47	0.00561829	0.00561829	11.9725

Process Streams		**HP Separator Gas**	**HP Separator Water**	**HP Separator Oil**	**OT Flash Gas**	**Sales Oil**	**Gas**	**Water**	**Oil**	**Produced Water**	**PWT Flash Gas**	**Oil W/B**	**Water W/B**	**Well Stream**	**LP Separator Oil**	**LP Separator Gas**	**r recovery by VRU (to**	**Total gas to sale**
Phase: Total	**Status**	Solved	Solved	Solved	Solved	Solved	Solved	Solved	Solved	Solved	Solved	Solved	Solved	Solved	Solved	Solved	Solved	Solved
Property	**Units**																	
Temperature	°F	70.0	70.0	70.0	75.9	75.9	85.0	85.0	85.0	75.9	75.9	75.9425	75.9425	84.0982	70	70	70	69.9992
Pressure	psig	169	169	169	0	0	1000	1000	1000	0	0	9.05313	-14.2225	1000	50	50	169	169
Mole Fraction Vapor	%	100	0	0	100	0	100	0	0	0	100	100	100	96.2687	0	100	99.5145	100
Mole Fraction Light Liquid	%	0	100	100	0	100	0	100	100	100	0	0	0	0.812246	100	0	0.269401	0
Mole Fraction Heavy Liquid	%	0	0	0	0	0	0	0	0	0	0	0	0	2.91905	0	0	0.216076	0
Molecular Weight	lb/lbmol	19.8	18.0	116.4	37.5	127.5	19.7	18.0	107.0	18.0	20.1	38.7987	18.4664	20.1137	121.977	23.9738	23.9738	19.7558
Mass Density	lb/ft^3	0.7	62.3	45.7	0.1	46.1	4.2	62.2	44.9	62.2	0.1	0.163793	0.00152177	4.48859	45.9717	0.279221	0.832099	0.666956
Molar Flow	lbmol/h	13505.8	388.8	58.8	3.4	52.1	13456.6	416.8	80.1	388.7	0.1	0.345654	0.00361594	13953.4	55.4701	3.35469	3.35469	13509.2
Mass Flow	lb/h	266803.6	7005.2	6846.5	127.0	6639.0	264574.7	7508.4	8572.1	7002.8	2.4	13.4109	0.0667733	280655	6766.07	80.4246	80.4246	266884
Vapor Volumetric Flow	MCFH	400.1	0.1	0.1	1.3	0.1	62.6	0.1	0.2	0.1	0.0	0.0818772	0.0438787	62.5264	0.147179	0.288032	0.0966527	400.152
Liquid Volumetric Flow	Mbbl/d	1710.1	0.5	0.6	5.6	0.6	267.5	0.5	0.8	0.5	0.2	0.349991	0.187563	267.274	0.629129	1.23122	0.413150	1710.48
Std Vapor Volumetric Flow	MMSCFD	123.0	3.5	0.5	0.0	0.5	122.6	3.8	0.7	3.5	0.0	0.00314808	3.29326E-05	127.083	0.505201	0.0305532	0.0305532	123.036
Std Liquid Volumetric Flow	Mbbl/d	55.1	0.5	0.6	0.0	0.6	54.9	0.5	0.8	0.5	0.0	0.00207322	5.09296E-06	56.2297	0.634372	0.0152269	0.0152269	55.1148
Compressibility		0.957	0.009	0.082	0.988	0.007	0.807	0.050	0.414	0.001	0.997	0.978711	0.999551	0.779184	0.0301992	0.977230	0.931091	0.957257
Specific Gravity		0.682	0.998	0.733	1.294	0.739	0.679	0.997	0.719	0.998	0.694	1.33961	0.637593		0.737092	0.827749		0.682114
API Gravity			10.0	60.4		58.1		9.9	62.1	10.0					59.2676			
Enthalpy	MMBtu/h	-458.8	-47.8	-5.8	-0.1	-5.5	-461.6	-51.1	-7.3	-47.8	0.0	-0.0146801	-0.000367476	-520.025	-5.66812	-0.120849	-0.121555	-458.911
Mass Enthalpy	Btu/lb	-1719.6	-6825.8	-846.9	-1141.6	-826.1	-1744.5	-6810.6	-855.6	-6822.0	-1850.2	-1094.64	-5503.34	-1852.90	-837.727	-1502.64	-1511.42	-1719.51
Mass Cp	Btu/(lb*°F)	0.5	1.0	0.5	0.4	0.5	0.7	1.0	0.5	1.0	0.5	0.412749	0.442062	0.669837	0.488193	0.464282	0.485518	0.508821
Ideal Gas CpCv Ratio		1.261	1.326	1.048	1.147	1.043	1.258	1.325	1.051	1.326	1.261	1.14340	1.32163	1.25415	1.04541	1.22244	1.22244	1.26127
Dynamic Viscosity	cP	0.0	1.0	0.6	0.0	0.7	0.0	0.8	0.5	0.9	0.0	0.00875631	0.0102759		0.658846	0.0101537		0.0108137
Kinematic Viscosity	cSt	1.0	1.0	0.8	5.7	0.9	0.2	0.8	0.7	0.9	13.1	3.33738	421.552		0.894690	2.27015		1.01217
Thermal Conductivity	Btu/(h*ft*°F)	0.0	0.3	0.1	0.0	0.1	0.0	0.4	0.1	0.3	0.0	0.0112625	0.0122631		0.0696266	0.0158705		0.0180199
Surface Tension	lbf/ft		0.005	0.001		0.002		0.005	0.001	0.005					0.00158557			
Net I.G. Heating Value	Btu/ft^3	1084.2	0.4	5842.5	1970.5	6387.4	1081.7	0.0	5385.0	0.0	1051.1	2046.15	50.2780	1074.07	6117.42	1296.19	1296.19	1084.26
Net Liquid Heating Value	Btu/lb	20774.0	-1051.9	18886.8	19808.5	18850.6	20827.0	-1059.8	18920.4	-1059.0	19747.2	19860.1	58.4497	20183.2	18868.6	20424.3	20424.3	20773.9
Gross I.G. Heating Value	Btu/ft^3	1197.1	50.7	6269.2	2146.8	6849.6	1194.3	50.3	5783.9	50.3	1161.6	2227.76	102.717	1186.50	6562.18	1424.23	1424.23	1197.12
Gross Liquid Heating Value	Btu/lb	22941.9	8.2	20277.5	21593.9	20226.0	23001.3	0.0	20333.1	0.8	21831.3	21636.2	1136.1	22304.5	20251.7	22451.0	22451.0	22941.7

Process Streams		**HP Separator Gas**	**HP Separator Water**	**HP Separator Oil**	**OT Flash Gas**	**Sales Oil**	**Gas**	**Water**	**Oil**	**Produced Water**	**PWT Flash Gas**	**Oil W/B**	**Water W/B**	**Well Stream**	**LP Separator Oil**	**LP Separator Gas**	**r recovery by VRU (to**	**Total gas to sale**
Phase: Vapor	**Status**	Solved	Solved	Solved	Solved	Solved	Solved	Solved	Solved	Solved	Solved	Solved	Solved	Solved	Solved	Solved	Solved	Solved
Mole Fraction		**%**	**%**	**%**	**%**	**%**	**%**	**%**	**%**	**%**	**%**	**%**	**%**	**%**	**%**	**%**	**%**	**%**
Water		0.207572	0.207572	0.207572	0.680150	0.680150	0			3.03281	3.03281	0.000610355	93.7740	0.0737110	0.421127	0.421127	0.206024	0.207625
H2S		0	0	0	0	0	0			0	0	0	0	0	0	0	0	0
Nitrogen		0.388973	0.388973	0.388973	0.0129157	0.0129157	0.3903			0.187901	0.187901	0.000627455	0.00331912	0.390707	0.118885	0.118885	0.119459	0.388906

Carbon Dioxide		0.165926	0.165926	0.165926	0.200583	0.200583	0.1666			1.28167	1.28167	0.186560	1.51969	0.165980	0.240904	0.240904	0.241961	0.165945
Methane		81.0328	81.0328	81.0328	19.9047	19.9047	81.3211			74.6436	74.6436	4.95690	3.66871	81.2927	61.7878	61.7878	62.0782	81.0281
Ethane		13.7166	13.7166	13.7166	39.7568	39.7568	13.757			17.4558	17.4558	54.1656	1.01211	13.6846	26.4845	26.4845	26.5853	13.7198
Propane		2.54452	2.54452	2.54452	18.7296	18.7296	2.5368			2.24100	2.24100	21.6986	0.0202418	2.51303	6.13570	6.13570	6.14370	2.54541
Isobutane		0.469316	0.469316	0.469316	4.61929	4.61929	0.4674			0.290952	0.290952	4.96964	0.000658197	0.457855	1.17213	1.17213	1.16762	0.469491
n-Butane		0.777225	0.777225	0.777225	8.17733	8.17733	0.7709			0.594273	0.594273	8.78513	0.00121086	0.752137	1.95217	1.95217	1.93689	0.777517
Isopentane		0.210710	0.210710	0.210710	2.35871	2.35871	0.2029			0.112151	0.112151	2.30988	5.90833E-05	0.200919	0.519013	0.519013	0.506653	0.210787
n-Pentane		0.167610	0.167610	0.167610	1.91492	1.91492	0.157			0.0349735	0.0349735	1.84619	5.42677E-06	0.158111	0.413453	0.413453	0.399927	0.167671
2-Methylpentane		0.0111574	0.0111574	0.0111574	0.128888	0.128888	0			0.00314813	0.00314813	0.118905	2.68566E-07	0.0102892	0.0270198	0.0270198	0.0247961	0.0111613
3-Methylpentane		0.00748313	0.00748313	0.00748313	0.0865472	0.0865472	0			0.00506568	0.00506568	0.0797597	9.58536E-07	0.00687154	0.0181071	0.0181071	0.0164598	0.00748577
n-Hexane		0.210269	0.210269	0.210269	2.43040	2.43040	0.23			0.0290143	0.0290143	0.158656	6.00678E-08	0.193637	0.504047	0.504047	0.445908	0.210342
Methylcyclopentane		0.00349222	0.00349222	0.00349222	0.0409210	0.0409210	0			0.00385561	0.00385561	0.0346643	8.72150E-07	0.00314567	0.00849469	0.00849469	0.00753109	0.00349346
Benzene		0.000593055	0.000593055	0.000593055	0.00701431	0.00701431	0			0.00579354	0.00579354	0.000408151	7.07098E-06	0.000530835	0.00145071	0.00145071	0.00128763	0.000593268
2-Methylhexane		0.0104950	0.0104950	0.0104950	0.118497	0.118497	0			0.00204750	0.00204750	0.00686952	2.32324E-09	0.00995806	0.0244835	0.0244835	0.0191679	0.0104985
3-Methylhexane		0.00853918	0.00853918	0.00853918	0.0966833	0.0966833	0			0.00200588	0.00200588	0.0892438	3.89598E-08	0.00812664	0.0199092	0.0199092	0.0152179	0.00854200
Heptane		0.0178205	0.0178205	0.0178205	0.199670	0.199670	0			0.00175686	0.00175686	0.176969	1.11689E-08	0.0175262	0.0410827	0.0410827	0.0295723	0.0178263
Methylcyclohexane		0.0118432	0.0118432	0.0118432	0.135450	0.135450	0			0.0124813	0.0124813	0.121613	9.04315E-07	0.0111589	0.0277605	0.0277605	0.0197682	0.0118472
Toluene		0.00240625	0.00240625	0.00240625	0.0277573	0.0277573	0			0.0215344	0.0215344	0.00342332	1.15174E-05	0.00227475	0.00567532	0.00567532	0.00400535	0.00240706
Octane		0.0236298	0.0236298	0.0236298	0.256333	0.256333	0			0.000923139	0.000923139	0.221188	7.37521E-10	0.0285983	0.0524853	0.0524853	0.0237661	0.0236370
Ethylbenzene		0.00134137	0.00134137	0.00134137	0.0149114	0.0149114	0			0.0113394	0.0113394	0.00367228	3.37159E-06	0.00158159	0.00303524	0.00303524	0.00134475	0.00134179
m-Xylene		0.00125994	0.00125994	0.00125994	0.0139471	0.0139471	0			0.00965527	0.00965527	0.00404336	1.99803E-06	0.00151585	0.00284118	0.00284118	0.00120914	0.00126033
o-Xylene		0.00176721	0.00176721	0.00176721	0.0195901	0.0195901	0			0.0154171	0.0154171	0.00508025	5.68626E-06	0.00217223	0.00398285	0.00398285	0.00154575	0.00176776
Nonane		0.00607378	0.00607378	0.00607378	0.0637744	0.0637744	0			0.000246936	0.000246936	0.0531953	5.97063E-11	0.0102051	0.0129608	0.0129608	0.00266526	0.00607549
C10+		0.000494726	0.000494726	0.000494726	0.00461502	0.00461502	0			0.000557008	0.000557008	0.00260916	7.13703E-11	0.00270017	0.000935096	0.000935096	7.02895E-06	0.000494836
Molar Flow		**lbmol/h**	**lbmol/h**	**lbmol/h**	**lbmol/h**	**lbmol/h**	**lbmol/h**	**lbmol/h**	**lbmol/h**	**lbmol/h**	**lbmol/h**	**lbmol/h**	**lbmol/h**	**lbmol/h**	**lbmol/h**	**lbmol/h**	**lbmol/h**	**lbmol/h**
Water		28.0343	0	0	0.0230581	0	0			0	0.00358668	2.10971E-06	0.00339081	9.90146	0	0.0141275	0.00687791	28.0484
H2S		0	0	0	0	0	0			0	0	0	0	0	0	0	0	0
Nitrogen		52.5340	0	0	0.000437861	0	52.5210			0	0.000222216	2.16882E-06	1.20018E-07	52.4829	0	0.00398824	0.00398803	52.5380
Carbon Dioxide		22.4096	0	0	0.00680007	0	22.4187			0	0.00151573	0.000644852	5.49511E-05	22.2958	0	0.00808159	0.00807764	22.4177
Methane		10944.1	0	0	0.674801	0	10943.0			0	0.0882754	0.0171337	0.000132658	10919.9	0	2.07279	2.07242	10946.2
Ethane		1852.54	0	0	1.34782	0	1851.22			0	0.0206437	0.187225	3.65972E-05	1838.22	0	0.888474	0.887527	1853.43
Propane		343.658	0	0	0.634961	0	341.366			0	0.00265026	0.0750021	7.31930E-07	337.571	0	0.205834	0.205102	343.864
Isobutane		63.3849	0	0	0.156601	0	62.8960			0	0.000344087	0.0171777	2.38000E-08	61.5028	0	0.0393214	0.0389798	63.4242
n-Butane		104.970	0	0	0.277224	0	103.737			0	0.000702802	0.0303661	4.37840E-08	101.033	0	0.0654894	0.0646613	105.036
Isopentane		28.4581	0	0	0.0799639	0	27.3034			0	0.000132633	0.00798417	2.13642E-09	26.9891	0	0.0174113	0.0169141	28.4755
n-Pentane		22.6370	0	0	0.0649189	0	21.1268			0	4.13606E-05	0.00638143	1.96229E-10	21.2387	0	0.0138701	0.0133512	22.6509
2-Methylpentane		1.50689	0	0	0.00436951	0	0			0	3.72306E-06	0.000411000	9.71118E-12	1.38212	0	0.000906432	0.000827795	1.50780
3-Methylpentane		1.01066	0	0	0.00293408	0	0			0	5.99080E-06	0.000275692	3.46601E-11	0.923040	0	0.000607438	0.000549494	1.01126
n-Hexane		28.3985	0	0	0.0823943	0	30.9501			0	3.43130E-05	0.000548400	2.17202E-12	26.0109	0	0.0169092	0.0148862	28.4154
Methylcyclopentane		0.471652	0	0	0.00138728	0	0			0	4.55975E-06	0.000119819	3.15364E-11	0.422552	0	0.000284971	0.000251418	0.471937
Benzene		0.0800968	0	0	0.000237796	0	0			0	6.85159E-06	1.41079E-06	2.55682E-10	0.0713061	0	4.86670E-05	4.29863E-05	0.0801455
2-Methylhexane		1.41744	0	0	0.00401722	0	0			0	2.42142E-06	2.37448E-05	8.40069E-14	1.33765	0	0.000821346	0.000639904	1.41826
3-Methylhexane		1.15328	0	0	0.00327771	0	0			0	2.37220E-06	0.000308475	1.40876E-12	1.09164	0	0.000667891	0.000508035	1.15395
Heptane		2.40681	0	0	0.00676912	0	0			0	2.07770E-06	0.000611700	4.03860E-13	2.35426	0	0.00137820	0.000987243	2.40818
Methylcyclohexane		1.59952	0	0	0.00459197	0	0			0	1.47607E-05	0.000420361	3.26995E-11	1.49895	0	0.000931280	0.000659943	1.60045
Toluene		0.324983	0	0	0.000941015	0	0			0	2.54671E-05	1.18328E-05	4.16461E-10	0.305563	0	0.000190390	0.000133715	0.325173
Octane		3.19140	0	0	0.00869009	0	0			0	1.09173E-06	0.000764545	2.66683E-14	3.84156	0	0.00176072	0.000793409	3.19316
Ethylbenzene		0.181162	0	0	0.000505519	0	0			0	1.34102E-05	1.26934E-05	1.21915E-10	0.212452	0	0.000101823	4.48934E-05	0.181264
m-Xylene		0.170164	0	0	0.000472830	0	0			0	1.14186E-05	1.39760E-05	7.22477E-11	0.203621	0	9.53129E-05	4.03659E-05	0.170260
o-Xylene		0.238676	0	0	0.000664134	0	0			0	1.82327E-05	1.75601E-05	2.05612E-10	0.291791	0	0.000133612	5.16033E-05	0.238810
Nonane		0.820312	0	0	0.00216205	0	0			0	2.92033E-07	0.000183871	2.15895E-15	1.37083	0	0.000434795	8.89771E-05	0.820747
C10+		0.0668167	0	0	0.000156456	0	0			0	6.58731E-07	9.01865E-06	2.58071E-15	0.362708	0	3.13696E-05	2.34655E-07	0.0668481
Mass Fraction		**%**	**%**	**%**	**%**	**%**	**%**	**%**	**%**	**%**	**%**	**%**	**%**	**%**	**%**	**%**	**%**	**%**
Water		0.189295	0.189295	0.189295	0.327005	0.327005	0			2.71634	2.71634	0.000283404	91.4834	0.0673662	0.316460	0.316460	0.155643	0.189333
H2S		0	0	0	0	0	0			0	0	0	0	0	0	0	0	0
Nitrogen		0.551587	0.551587	0.551587	0.00965588	0.00965588	0.556097			0.261693	0.261693	0.000453035	0.00503510	0.555246	0.138918	0.138918	0.140332	0.551463
Carbon Dioxide		0.369649	0.369649	0.369649	0.235586	0.235586	0.372913			2.80427	2.80427	0.211616	3.62177	0.370571	0.442236	0.442236	0.446542	0.369671
Methane		65.8053	65.8053	65.8053	8.52189	8.52189	66.3530			59.5335	59.5335	2.04958	3.18716	66.1593	41.3464	41.3464	41.7619	65.7979
Ethane		20.8783	20.8783	20.8783	31.9036	31.9036	21.0392			26.0951	26.0951	41.9784	1.64803	20.8746	33.2182	33.2182	33.5222	20.8820
Propane		5.67976	5.67976	5.67976	22.0411	22.0411	5.68942			4.91287	4.91287	24.6610	0.0483351	5.62163	11.2856	11.2856	11.3605	5.68145
Isobutane		1.38082	1.38082	1.38082	7.16517	7.16517	1.38171			0.840738	0.840738	7.44475	0.00207165	1.35002	2.84173	2.84173	2.84586	1.38126
n-Butane		2.28674	2.28674	2.28674	12.6842	12.6842	2.27891			1.71722	1.71722	13.1605	0.00381114	2.21772	4.73287	4.73287	4.72082	2.28748

Isopentane		0.769561	0.769561	0.769561	4.54164	4.54164	0.744556			0.402283	0.402283	4.29537	0.000230841	0.735392	1.56196	1.56196	1.53289	0.769800
n-Pentane		0.612148	0.612148	0.612148	3.68714	3.68714	0.576123			0.125449	0.125449	3.43312	2.12026E-05	0.578707	1.24428	1.24428	1.20999	0.612338
2-Methylpentane		0.0486713	0.0486713	0.0486713	0.296419	0.296419	0			0.0134876	0.0134876	0.264099	1.25329E-06	0.0449813	0.0971246	0.0971246	0.0896061	0.0486859
3-Methylpentane		0.0326434	0.0326434	0.0326434	0.199042	0.199042	0			0.0217029	0.0217029	0.177154	4.47312E-06	0.0300404	0.0650873	0.0650873	0.0594809	0.0326531
n-Hexane		0.917248	0.917248	0.917248	5.58946	5.58946	1.00809			0.124306	0.124306	0.352389	2.80313E-07	0.846527	1.81183	1.81183	1.61138	0.917518
Methylcyclopentane		0.0148776	0.0148776	0.0148776	0.0919091	0.0919091	0			0.0161322	0.0161322	0.0751915	3.97478E-06	0.0134303	0.0298205	0.0298205	0.0265785	0.0148821
Benzene		0.00234499	0.00234499	0.00234499	0.0146221	0.0146221	0			0.0224988	0.0224988	0.000821715	2.99099E-05	0.00210351	0.00472675	0.00472675	0.00421773	0.00234570
2-Methylhexane		0.0532340	0.0532340	0.0532340	0.316877	0.316877	0			0.0101999	0.0101999	0.0177413	1.26063E-08	0.0506197	0.102332	0.102332	0.0805419	0.0532488
3-Methylhexane		0.0433133	0.0433133	0.0433133	0.258545	0.258545	0			0.00999258	0.00999258	0.230482	2.11403E-07	0.0413101	0.0832133	0.0832133	0.0639442	0.0433253
Heptane		0.0903911	0.0903911	0.0903911	0.533947	0.533947	0			0.00875205	0.00875205	0.457042	6.06044E-08	0.0890908	0.171711	0.171711	0.124260	0.0904156
Methylcyclohexane		0.0588638	0.0588638	0.0588638	0.354926	0.354926	0			0.0609268	0.0609268	0.307762	4.80827E-06	0.0555825	0.113695	0.113695	0.0813931	0.0588804
Toluene		0.0112230	0.0112230	0.0112230	0.0682538	0.0682538	0			0.0986443	0.0986443	0.00812964	5.74662E-05	0.0106327	0.0218120	0.0218120	0.0154758	0.0112262
Octane		0.136635	0.136635	0.136635	0.781427	0.781427	0			0.00524251	0.00524251	0.651208	4.56213E-09	0.165723	0.250078	0.250078	0.113842	0.136670
Ethylbenzene		0.00720871	0.00720871	0.00720871	0.0422483	0.0422483	0			0.0598505	0.0598505	0.0100485	1.93836E-05	0.00851812	0.0134412	0.0134412	0.00598680	0.00721059
m-Xylene		0.00677109	0.00677109	0.00677109	0.0395162	0.0395162	0			0.0509616	0.0509616	0.0110639	1.14869E-05	0.00816404	0.0125818	0.0125818	0.00538304	0.00677284
o-Xylene		0.00949727	0.00949727	0.00949727	0.0555043	0.0555043	0			0.0813735	0.0813735	0.0139011	3.26909E-05	0.0116992	0.0176376	0.0176376	0.00688161	0.00949972
Nonane		0.0394332	0.0394332	0.0394332	0.218288	0.218288	0			0.00157455	0.00157455	0.175845	4.14681E-10	0.0663988	0.0693378	0.0693378	0.0143346	0.0394422
C10+		0.00448527	0.00448527	0.00448527	0.0220586	0.0220586	0			0.00495969	0.00495969	0.0120442	6.92201E-10	0.0245332	0.00698579	0.00698579	5.27906E-05	0.00448603
Mass Flow		**lb/h**	**lb/h**	**lb/h**	**lb/h**	**lb/h**	**lb/h**	**lb/h**	**lb/h**	**lb/h**	**lb/h**	**lb/h**	**lb/h**	**lb/h**	**lb/h**	**lb/h**	**lb/h**	**lb/h**
Water		505.046	0	0	0.415399	0	0			0	0.0646151	3.80071E-05	0.0610864	178.377	0	0.254511	0.123907	505.300
H2S		0	0	0	0	0	0			0	0	0	0	0	0	0	0	0
Nitrogen		1471.66	0	0	0.0122660	0	1471.29			0	0.00622503	6.07561E-05	3.36210E-06	1470.22	0	0.111724	0.111718	1471.77
Carbon Dioxide		986.237	0	0	0.299268	0	986.634			0	0.0667065	0.0283796	0.00241837	981.227	0	0.355667	0.355493	986.592
Methane		175571	0	0	10.8255	0	175553			0	1.41615	0.274867	0.00212817	175182	0	33.2527	33.2467	175604
Ethane		55704.1	0	0	40.5275	0	55664.4			0	0.620737	5.62968	0.00110044	55273.5	0	26.7156	26.6871	55730.8
Propane		15153.8	0	0	27.9990	0	15052.8			0	0.116865	3.30726	3.22749E-05	14885.4	0	9.07638	9.04409	15162.9
Isobutane		3684.07	0	0	9.10200	0	3655.66			0	0.0199991	0.998409	1.38331E-06	3574.68	0	2.28545	2.26559	3686.35
n-Butane		6101.11	0	0	16.1129	0	6029.41			0	0.0408484	1.76495	2.54482E-06	5872.26	0	3.80639	3.75826	6104.92
Isopentane		2053.22	0	0	5.76930	0	1969.91			0	0.00956931	0.576048	1.54140E-07	1947.23	0	1.25620	1.22033	2054.47
n-Pentane		1633.23	0	0	4.68382	0	1524.27			0	0.00298412	0.460412	1.41577E-08	1532.35	0	1.00071	0.963273	1634.23
2-Methylpentane		129.857	0	0	0.376544	0	0			0	0.000320836	0.0354181	8.36864E-10	119.105	0	0.0781121	0.0713356	129.935
3-Methylpentane		87.0937	0	0	0.252846	0	0			0	0.000516259	0.0237579	2.98685E-09	79.5433	0	0.0523462	0.0473529	87.1460
n-Hexane		2447.25	0	0	7.10036	0	2667.14			0	0.00295693	0.0472585	1.87174E-10	2241.50	0	1.45716	1.28282	2448.71
Methylcyclopentane		39.6940	0	0	0.116753	0	0			0	0.000383746	0.0100839	2.65409E-09	35.5618	0	0.0239830	0.0211592	39.7179
Benzene		6.25651	0	0	0.0185747	0	0			0	0.000535190	0.000110199	1.99718E-08	5.56985	0	0.00380147	0.00335774	6.26031
2-Methylhexane		142.030	0	0	0.402533	0	0			0	0.000242631	0.00237927	8.41765E-12	134.035	0	0.0823005	0.0641196	142.112
3-Methylhexane		115.561	0	0	0.328433	0	0			0	0.000237699	0.0309098	1.41161E-10	109.384	0	0.0669240	0.0509061	115.628
Heptane		241.167	0	0	0.678279	0	0			0	0.000208190	0.0612935	4.04675E-11	235.902	0	0.138098	0.0989237	241.305
Methylcyclohexane		157.051	0	0	0.450867	0	0			0	0.00144930	0.0412736	3.21064E-09	147.176	0	0.0914387	0.0647972	157.142
Toluene		29.9434	0	0	0.0867036	0	0			0	0.00234650	0.00109026	3.83720E-08	28.1541	0	0.0175422	0.0123203	29.9609
Octane		364.548	0	0	0.992656	0	0			0	0.000124706	0.0873329	3.04629E-12	438.816	0	0.201124	0.0906300	364.749
Ethylbenzene		19.2331	0	0	0.0536685	0	0			0	0.00142370	0.00134759	1.29431E-08	22.5549	0	0.0108100	0.00476610	19.2439
m-Xylene		18.0655	0	0	0.0501979	0	0			0	0.00121225	0.00148377	7.67018E-09	21.6174	0	0.0101189	0.00428545	18.0756
o-Xylene		25.3391	0	0	0.0705078	0	0			0	0.00193567	0.00186427	2.18288E-08	30.9780	0	0.0141849	0.00547847	25.3532
Nonane		105.209	0	0	0.277294	0	0			0	3.74548E-05	0.0235825	2.76896E-13	175.816	0	0.0557646	0.0114118	105.265
C10+		11.9669	0	0	0.0280213	0	0			0	0.000117979	0.00161524	4.62205E-13	64.9610	0	0.00561829	4.20267E-05	11.9725

Process Streams		**HP Separator Gas**	**HP Separator Water**	**HP Separator Oil**	**OT Flash Gas**	**Sales Oil**	**Gas**	**Water**	**Oil**	**Produced Water**	**PWT Flash Gas**	**Oil W/B**	**Water W/B**	**Well Stream**	**LP Separator Oil**	**LP Separator Gas**	**r recovery by VRU (to**	**Total gas to sale**
Phase: Vapor	**Status**	Solved	Solved	Solved	Solved	Solved	Solved	Solved	Solved	Solved	Solved	Solved	Solved	Solved	Solved	Solved	Solved	Solved
Property	**Units**																	
Temperature	°F	70.0	70.0	70.0	75.9	75.9	85.0			75.9	75.9	75.9425	75.9425	84.0982	70	70	70	69.9992
Pressure	psig	169	169	169	0	0	1000			0	0	9.05313	-14.2225	1000	50	50	169	169
Mole Fraction Vapor	%	100	100	100	100	100	100			100	100	100	100	100	100	100	100	100
Mole Fraction Light Liquid	%	0	0	0	0	0	0			0	0	0	0	0	0	0	0	0
Mole Fraction Heavy Liquid	%	0	0	0	0	0	0			0	0	0	0	0	0	0	0	0
Molecular Weight	lb/lbmol	19.8	19.8	19.8	37.5	37.5	19.7			20.1	20.1	38.7987	18.4664	19.7120	23.9738	23.9738	23.8468	19.7558
Mass Density	lb/ft^3	0.7	0.7	0.7	0.1	0.1	4.2			0.1	0.1	0.163793	0.00152177	4.25712	0.279221	0.279221	0.823835	0.666956
Molar Flow	lbmol/h	13505.8	0.0	0.0	3.4	0.0	13456.6			0.0	0.1	0.345654	0.00361594	13432.8	0	3.35469	3.33841	13509.2
Mass Flow	lb/h	266803.6	0.0	0.0	127.0	0.0	264574.7			0.0	2.4	13.4109	0.0667733	264788	0	80.4246	79.6102	266884
Vapor Volumetric Flow	MCFH	400.1	0.0	0.0	1.3	0.0	62.6			0.0	0.0	0.0818772	0.0438787	62.1988	0	0.288032	0.0966337	400.152
Liquid Volumetric Flow	Mbbl/d	1710.1	0.0	0.0	5.6	0.0	267.5			0.0	0.2	0.349991	0.187563	265.874	0	1.23122	0.413069	1710.48
Std Vapor Volumetric Flow	MMSCFD	123.0	0.0	0.0	0.0	0.0	122.6			0.0	0.0	0.00314808	3.29326E-05	122.341	0	0.0305532	0.0304049	123.036

Std Liquid Volumetric Flow	Mbbl/d	55.1	0.0	0.0	0.0	0.0	54.9			0.0	0.0	0.00207322	5.09296E-06	54.7989	0	0.0152269	0.0151441	55.1148
Compressibility		0.957	0.957	0.957	0.988	0.988	0.807			0.997	0.997	0.978711	0.999551	0.805145	0.977230	0.977230	0.935449	0.957257
Specific Gravity		0.682	0.682	0.682	1.294	1.294	0.679			0.694	0.694	1.33961	0.637593	0.680603	0.827749	0.827749	0.823364	0.682114
API Gravity																		
Enthalpy	MMBtu/h	-458.8	0.0	0.0	-0.1	0.0	-461.6			0.0	0.0	-0.0146801	-0.000367476	-461.960	0	-0.120849	-0.119988	-458.910
Mass Enthalpy	Btu/lb	-1719.6	-1719.6	-1719.6	-1141.6	-1141.6	-1744.5			-1850.2	-1850.2	-1094.64	-5503.34	-1744.64	-1502.64	-1502.64	-1507.19	-1719.51
Mass Cp	Btu/(lb*°F)	0.5	0.5	0.5	0.4	0.4	0.7			0.5	0.5	0.412749	0.442062	0.665539	0.464282	0.464282	0.484264	0.508821
Ideal Gas CpCv Ratio		1.261	1.261	1.261	1.147	1.147	1.258			1.261	1.261	1.14340	1.32163	1.25799	1.22244	1.22244	1.22353	1.26127
Dynamic Viscosity	cP	0.0	0.0	0.0	0.0	0.0	0.0			0.0	0.0	0.00875631	0.0102759	0.0130863	0.0101537	0.0101537	0.0103688	0.0108137
Kinematic Viscosity	cSt	1.0	1.0	1.0	5.7	5.7	0.2			13.1	13.1	3.33738	421.552	0.191903	2.27015	2.27015	0.785720	1.01217
Thermal Conductivity	Btu/(h*ft*°F)	0.0	0.0	0.0	0.0	0.0	0.0			0.0	0.0	0.0112625	0.0122631	0.0225532	0.0158705	0.0158705	0.0163695	0.0180199
Surface Tension	lbf/ft																	
Net I.G. Heating Value	Btu/ft^3	1084.2	1084.2	1084.2	1970.5	1970.5	1081.7			1051.1	1051.1	2046.15	50.2780	1083.39	1296.19	1296.19	1292.06	1084.26
Net Liquid Heating Value	Btu/lb	20774.0	20774.0	20774.0	19808.5	19808.5	20827.0			19747.2	19747.2	19860.1	58.4497	20805.1	20424.3	20424.3	20470.1	20773.9
Gross I.G. Heating Value	Btu/ft^3	1197.1	1197.1	1197.1	2146.8	2146.8	1194.3			1161.6	1161.6	2227.76	102.717	1196.16	1424.23	1424.23	1419.78	1197.12
Gross Liquid Heating Value	Btu/lb	22941.9	22941.9	22941.9	21593.9	21593.9	23001.3			21831.3	21831.3	21636.2	1136.1	22976.1	22451.0	22451.0	22502.6	22941.7

Process Streams		HP Separator Gas	HP Separator Water	HP Separator Oil	OT Flash Gas	Sales Oil	Gas	Water	Oil	Produced Water	PWT Flash Gas	Oil W/B	Water W/B	Well Stream	LP Separator Oil	LP Separator Gas	r recovery by VRU (to	Total gas to sale
Phase: Light Liquid	Status	Solved	Solved	Solved	Solved	Solved	Solved	Solved	Solved	Solved	Solved	Solved	Solved	Solved	Solved	Solved	Solved	Solved
Mole Fraction		%	%	%	%	%	%	%	%	%	%	%	%	%	%	%	%	%
Water		0.0834134	99.9672	0.0834134	0.0228151	0.0228151		100	0	99.9967	99.9967	2.96890E-05	100.0000	0.0878264	0.0629893	0.0629893	0.0379895	
H2S		0	0	0	0	0		0	0	0	0	0	0	0	0	0	0	
Nitrogen		0.00754164	5.93504E-05	0.00754164	1.96876E-05	1.96876E-05		0	0.0219998	2.20052E-06	2.20052E-06	1.59320E-06	1.25237E-09	0.0480706	0.000807848	0.000807848	0.00232245	
Carbon Dioxide		0.0277221	0.00101075	0.0277221	0.00273776	0.00273776		0	0.0139999	0.000621113	0.000621113	0.00412984	2.38534E-05	0.105522	0.0148294	0.0148294	0.0425298	
Methane		4.75389	0.0245007	4.75389	0.0938449	0.0938449		0	4.97995	0.00179817	0.00179817	0.0386394	2.85610E-06	23.5605	1.30462	1.30462	4.07668	
Ethane		4.84589	0.00593644	4.84589	1.17953	1.17953		0	5.23595	0.000627378	0.000627378	2.59154	1.18216E-06	15.1101	3.53724	3.53724	10.4743	
Propane		3.29940	0.000738468	3.29940	2.11227	2.11227		0	5.28795	5.68777E-05	5.68777E-05	3.95607	1.67727E-08	7.07995	3.12787	3.12787	8.10035	
Isobutane		1.52103	9.36379E-05	1.52103	1.34182	1.34182		0	1.72798	5.14560E-06	5.14560E-06	2.29171	3.81605E-10	2.44988	1.54213	1.54213	3.77959	
n-Butane		3.64976	0.000194580	3.64976	3.46438	3.46438		0	4.22196	1.38340E-05	1.38340E-05	5.89522	9.24679E-10	5.36795	3.75242	3.75242	9.16305	
Isopentane		2.36912	3.59566E-05	2.36912	2.48897	2.48897		0	3.18197	1.84596E-06	1.84596E-06	3.93771	3.20638E-11	2.52579	2.48101	2.48101	5.50093	
n-Pentane		2.52468	1.08674E-05	2.52468	2.70037	2.70037		0	3.73996	2.30182E-07	2.30182E-07	4.19629	1.17744E-12	2.54415	2.65236	2.65236	5.74132	
2-Methylpentane		0.394154	9.86008E-07	0.394154	0.435070	0.435070		0	2.17098	2.85033E-08	2.85033E-08	0.637194	8.04171E-14	0.314663	0.416357	0.416357	0.870104	
3-Methylpentane		0.294208	1.65418E-06	0.294208	0.325510	0.325510		0	1.47799	1.13471E-07	1.13471E-07	0.476020	7.10142E-13	0.230009	0.310906	0.310906	0.641141	
n-Hexane		10.6863	8.95520E-06	10.6863	11.8796	11.8796		0	4.66295	1.30466E-07	1.30466E-07	1.22757	8.94482E-15	7.65313	11.3021	11.3021	22.3845	
Methylcyclopentane		0.177120	1.31632E-06	0.177120	0.196847	0.196847		0	0.718993	1.43663E-07	1.43663E-07	0.265022	1.07338E-12	0.135252	0.187318	0.187318	0.371253	
Benzene		0.0338890	2.07162E-05	0.0338890	0.0377279	0.0377279		0	0.124999	1.89599E-05	1.89599E-05	0.00341937	7.63162E-10	0.0253472	0.0358508	0.0358508	0.0628218	
2-Methylhexane		1.15345	6.35439E-07	1.15345	1.29354	1.29354		0	2.61697	1.26906E-08	1.26906E-08	0.116604	4.78496E-16	0.669077	1.22173	1.22173	2.00765	
3-Methylhexane		1.04429	6.24931E-07	1.04429	1.17196	1.17196		0	2.20698	1.48419E-08	1.48419E-08	1.68060	9.57861E-15	0.596410	1.10624	1.10624	1.76879	
Heptane		2.83174	5.40179E-07	2.83174	3.18284	3.18284		0	5.08495	5.82734E-09	5.82734E-09	4.41683	1.23276E-15	1.51612	3.00052	3.00052	4.32590	
Methylcyclohexane		1.90722	4.25850E-06	1.90722	2.14362	2.14362		0	3.39797	4.62412E-07	4.62412E-07	3.00671	1.11174E-12	1.07865	2.02088	2.02088	3.00233	
Toluene		0.483249	5.95953E-05	0.483249	0.543662	0.543662		0	0.760992	5.30617E-05	5.30617E-05	0.104879	9.40277E-10	0.267995	0.512132	0.512132	0.627027	
Octane		11.9448	2.82078E-07	11.9448	13.4717	13.4717		0	12.7579	1.30313E-09	1.30313E-09	17.9337	3.47973E-17	5.62602	12.6640	12.6640	10.7032	
Ethylbenzene		0.831418	2.84232E-05	0.831418	0.937929	0.937929		0	0.836992	2.49819E-05	2.49819E-05	0.354471	2.47446E-10	0.403953	0.881517	0.881517	0.629902	
m-Xylene		0.848831	1.66613E-05	0.848831	0.957671	0.957671		0	0.835992	1.37288E-05	1.37288E-05	0.422325	9.46869E-11	0.411064	0.899994	0.899994	0.607972	
o-Xylene		1.37882	5.51943E-05	1.37882	1.55586	1.55586		0	1.31099	5.05205E-05	5.05205E-05	0.612635	6.20958E-10	0.668838	1.46197	1.46197	0.907387	
Nonane		9.69219	7.54627E-08	9.69219	10.9424	10.9424		0	8.14292	3.56303E-10	3.56303E-10	14.0617	2.89479E-18	4.54479	10.2776	10.2776	3.82645	
C10+		33.2159	1.99179E-07	33.2159	37.5173	37.5173		0	24.4798	2.97721E-08	2.97721E-08	31.7690	1.30060E-16	16.9790	35.2247	35.2247	0.344506	
Molar Flow		lbmol/h	lbmol/h	lbmol/h	lbmol/h	lbmol/h	lbmol/h	lbmol/h	lbmol/h	lbmol/h	lbmol/h	lbmol/h	lbmol/h	lbmol/h	lbmol/h	lbmol/h	lbmol/h	lbmol/h
Water		0	388.698	0.0490678	0	0.0118821		416.781	0	388.694	0	0	0	0.0995392	0.0349403	0	3.43333E-06	
H2S		0	0	0	0	0		0	0	0	0	0	0	0	0	0	0	
Nitrogen		0	0.000230770	0.00443636	0	1.02533E-05		0	0.0176198	8.55356E-06	0	0	0	0.0544815	0.000448114	0	2.09893E-07	
Carbon Dioxide		0	0.00393004	0.0163075	0	0.00142582		0	0.0112126	0.00241431	0	0	0	0.119595	0.00822589	0	3.84365E-06	
Methane		0	0.0952650	2.79647	0	0.0488744		0	3.98848	0.00698961	0	0	0	26.7026	0.723675	0	0.000368433	
Ethane		0	0.0230824	2.85059	0	0.614298		0	4.19351	0.00243866	0	0	0	17.1252	1.96211	0	0.000946621	
Propane		0	0.00287135	1.94087	0	1.10007		0	4.23516	0.000221088	0	0	0	8.02415	1.73503	0	0.000732074	
Isobutane		0	0.000364088	0.894742	0	0.698820		0	1.38396	2.00013E-05	0	0	0	2.77660	0.855421	0	0.000341583	
n-Butane		0	0.000756576	2.14696	0	1.80425		0	3.38140	5.37739E-05	0	0	0	6.08384	2.08147	0	0.000828116	
Isopentane		0	0.000139808	1.39363	0	1.29625		0	2.54846	7.17536E-06	0	0	0	2.86264	1.37622	0	0.000497150	
n-Pentane		0	4.22553E-05	1.48514	0	1.40635		0	2.99537	8.94736E-07	0	0	0	2.88345	1.47127	0	0.000518875	
2-Methylpentane		0	3.83385E-06	0.231860	0	0.226584		0	1.73875	1.10794E-07	0	0	0	0.356627	0.230954	0	7.86362E-05	
3-Methylpentane		0	6.43187E-06	0.173067	0	0.169526		0	1.18373	4.41069E-07	0	0	0	0.260684	0.172460	0	5.79435E-05	
n-Hexane		0	3.48201E-05	6.28619	0	6.18689		0	3.73460	5.07129E-07	0	0	0	8.67378	6.26928	0	0.00202301	

Methylcyclopentane		0	5.11818E-06	0.104190	0	0.102518		0	0.575847	5.58430E-07	0	0	0	0.153290	0.103905	0	3.35522E-05	
Benzene		0	8.05499E-05	0.0199352	0	0.0196487		0	0.100113	7.36983E-05	0	0	0	0.0287276	0.0198865	0	5.67756E-06	
2-Methylhexane		0	2.47075E-06	0.678514	0	0.673676		0	2.09596	4.93294E-08	0	0	0	0.758307	0.677693	0	0.000181443	
3-Methylhexane		0	2.42989E-06	0.614300	0	0.610354		0	1.76759	5.76915E-08	0	0	0	0.675949	0.613632	0	0.000159856	
Heptane		0	2.10035E-06	1.66577	0	1.65762		0	4.07258	2.26513E-08	0	0	0	1.71831	1.66439	0	0.000390956	
Methylcyclohexane		0	1.65582E-05	1.12192	0	1.11640		0	2.72146	1.79743E-06	0	0	0	1.22250	1.12099	0	0.000271337	
Toluene		0	0.000231722	0.284271	0	0.283139		0	0.609485	0.000206255	0	0	0	0.303736	0.284080	0	5.66679E-05	
Octane		0	1.09679E-06	7.02649	0	7.01604		0	10.2179	5.06537E-09	0	0	0	6.37632	7.02473	0	0.000967310	
Ethylbenzene		0	0.000110516	0.489081	0	0.488473		0	0.670353	9.71063E-05	0	0	0	0.457825	0.488979	0	5.69278E-05	
m-Xylene		0	6.47834E-05	0.499323	0	0.498755		0	0.669552	5.33648E-05	0	0	0	0.465885	0.499228	0	5.49459E-05	
o-Xylene		0	0.000214610	0.811089	0	0.810291		0	1.04998	0.000196377	0	0	0	0.758037	0.810956	0	8.20056E-05	
Nonane		0	2.93418E-07	5.70142	0	5.69882		0	6.52173	1.38498E-09	0	0	0	5.15090	5.70098	0	0.000345818	
C10+		0	7.74458E-07	19.5392	0	19.5390		0	19.6060	1.15726E-07	0	0	0	19.2433	19.5392	0	3.11349E-05	

Process Streams		HP Separator Gas	HP Separator Water	HP Separator Oil	OT Flash Gas	Sales Oil	Gas	Water	Oil	Produced Water	PWT Flash Gas	Oil W/B	Water W/B	Well Stream	LP Separator Oil	LP Separator Gas	r recovery by VRU (to	Total gas to sale
Phase: Light Liquid	Status	Solved	Solved	Solved	Solved	Solved	Solved	Solved	Solved	Solved	Solved	Solved	Solved	Solved	Solved	Solved	Solved	Solved
Property	Units																	
Temperature	°F	70.0	70.0	70.0	75.9	75.9		85.0	85.0	75.9	75.9	75.9425	75.9425	84.0982	70	70	70	
Pressure	psig	169	169	169	0	0		1000	1000	0	0	9.05313	-14.2225	1000	50	50	169	
Mole Fraction Vapor	%	0	0	0	0	0		0	0	0	0	0	0	0	0	0	0	
Mole Fraction Light Liquid	%	100	100	100	100	100		100	100	100	100	100	100	100	100	100	100	
Mole Fraction Heavy Liquid	%	0	0	0	0	0		0	0	0	0	0	0	0	0	0	0	
Molecular Weight	lb/lbmol	116.4	18.0	116.4	127.5	127.5		18.0	107.0	18.0	18.0	121.571	18.0153	75.2540	121.977	121.977	75.6617	
Mass Density	lb/ft^3	45.7	62.3	45.7	46.1	46.1		62.2	44.9	62.2	62.2	45.4599	62.2234	40.7402	45.9717	45.9717	40.4570	
Molar Flow	lbmol/h	0.0	388.8	58.8	0.0	52.1		416.8	80.1	388.7	0.0	0	0	113.336	55.4701	0	0.00903756	
Mass Flow	lb/h	0.0	7005.2	6846.5	0.0	6639.0		7508.4	8572.1	7002.8	0.0	0	0	8529.02	6766.07	0	0.683797	
Vapor Volumetric Flow	MCFH	0.0	0.1	0.1	0.0	0.1		0.1	0.2	0.1	0.0	0	0	0.209352	0.147179	0	1.69018E-05	
Liquid Volumetric Flow	Mbbl/d	0.0	0.5	0.6	0.0	0.6		0.5	0.8	0.5	0.0	0	0	0.894890	0.629129	0	7.22482E-05	
Std Vapor Volumetric Flow	MMSCFD	0.0	3.5	0.5	0.0	0.5		3.8	0.7	3.5	0.0	0	0	1.03222	0.505201	0	8.23106E-05	
Std Liquid Volumetric Flow	Mbbl/d	0.0	0.5	0.6	0.0	0.6		0.5	0.8	0.5	0.0	0	0	0.926394	0.634372	0	7.38107E-05	
Compressibility		0.082	0.009	0.082	0.007	0.007		0.050	0.414	0.001	0.001	0.0110493	2.38484E-05	0.321193	0.0301992	0.0301992	0.0604384	
Specific Gravity		0.733	0.998	0.733	0.739	0.739		0.997	0.719	0.998	0.998	0.728885	0.997665	0.653212	0.737092	0.737092	0.648672	
API Gravity		60.4	10.0	60.4	58.1	58.1		9.9	62.1	10.0	10.0	60.6796	10.0006	80.4398	59.2676	59.2676	84.7562	
Enthalpy	MMBtu/h	0.0	-47.8	-5.8	0.0	-5.5		-51.1	-7.3	-47.8	0.0	0	0	-8.12768	-5.66812	0	-0.000676135	
Mass Enthalpy	Btu/lb	-846.9	-6825.8	-846.9	-826.1	-826.1		-6810.6	-855.6	-6822.0	-6822.0	-857.611	-6822.32	-952.945	-837.727	-837.727	-988.796	
Mass Cp	Btu/(lb*°F)	0.5	1.0	0.5	0.5	0.5		1.0	0.5	1.0	1.0	0.494632	0.981771	0.535932	0.488193	0.488193	0.536573	
Ideal Gas CpCv Ratio		1.048	1.326	1.048	1.043	1.043		1.325	1.051	1.326	1.326	1.04485	1.32556	1.07162	1.04541	1.04541	1.07298	
Dynamic Viscosity	cP	0.6	1.0	0.6	0.7	0.7		0.8	0.5	0.9	0.9	0.623909	0.924434	0.257508	0.658846	0.658846	0.259664	
Kinematic Viscosity	cSt	0.8	1.0	0.8	0.9	0.9		0.8	0.7	0.9	0.9	0.856785	0.927474	0.394592	0.894690	0.894690	0.400679	
Thermal Conductivity	Btu/(h*ft*°F)	0.1	0.3	0.1	0.1	0.1		0.4	0.1	0.3	0.3	0.0693882	0.349835	0.0647380	0.0696266	0.0696266	0.0667130	
Surface Tension	lbf/ft	0.001	0.005	0.001	0.002	0.002		0.005	0.001	0.005	0.005	0.00155693	0.00498784	0.000668239	0.00158557	0.00158557	0.00106413	
Net I.G. Heating Value	Btu/ft^3	5842.5	0.4	5842.5	6387.4	6387.4		0.0	5385.0	0.0	0.0	6110.78	4.56570E-05	3824.20	6117.42	6117.42	3861.58	
Net Liquid Heating Value	Btu/lb	18886.8	-1051.9	18886.8	18850.6	18850.6		-1059.8	18920.4	-1059.0	-1059.0	18913.0	-1059.76	19129.3	18868.6	18868.6	19190.9	
Gross I.G. Heating Value	Btu/ft^3	6269.2	50.7	6269.2	6849.6	6849.6		50.3	5783.9	50.3	50.3	6560.45	50.3101	4119.60	6562.18	6562.18	4169.24	
Gross Liquid Heating Value	Btu/lb	20277.5	8.2	20277.5	20226.0	20226.0		0.0	20333.1	0.8	0.8	20316.2	0.00101406	20618.4	20251.7	20251.7	20732.5	

Process Streams		HP Separator Gas	HP Separator Water	HP Separator Oil	OT Flash Gas	Sales Oil	Gas	Water	Oil	Produced Water	PWT Flash Gas	Oil W/B	Water W/B	Well Stream	LP Separator Oil	LP Separator Gas	r recovery by VRU (to	Total gas to sale
Phase: Heavy Liquid	Status	Solved	Solved	Solved	Solved	Solved	Solved	Solved	Solved	Solved	Solved	Solved	Solved	Solved	Solved	Solved	Solved	Solved
Mole Fraction		%	%	%	%	%	%	%	%	%	%	%	%	%	%	%	%	%
Water		99.9672		99.9672										99.8705			99.9654	
H2S		0		0										0			0	
Nitrogen		5.93504E-05		5.93504E-05										0.000311666			1.85032E-05	
Carbon Dioxide		0.00101075		0.00101075										0.00355554			0.00147697	
Methane		0.0245007		0.0245007										0.106247			0.0188975	
Ethane		0.00593644		0.00593644										0.0171234			0.0114084	
Propane		0.000738468		0.000738468										0.00159724			0.00174524	
Isobutane		9.36379E-05		9.36379E-05										0.000144890			0.000225515	
n-Butane		0.000194580		0.000194580										0.000313078			0.000468812	
Isopentane		3.59566E-05		3.59566E-05										3.96082E-05			8.30090E-05	
n-Pentane		1.08674E-05		1.08674E-05										1.36461E-05			2.47705E-05	
2-Methylpentane		9.86008E-07		9.86008E-07										9.52571E-07			2.06232E-06	
3-Methylpentane		1.65418E-06		1.65418E-06										1.53764E-06			3.42352E-06	

n-Hexane		8.95520E-06		8.95520E-06										8.18950E-06			1.78309E-05	
Methylcyclopentane		1.31632E-06		1.31632E-06										1.24844E-06			2.68077E-06	
Benzene		2.07162E-05		2.07162E-05										1.93496E-05			4.28770E-05	
2-Methylhexane		6.35439E-07		6.35439E-07										4.17183E-07			1.08014E-06	
3-Methylhexane		6.24931E-07		6.24931E-07										4.00342E-07			1.03661E-06	
Heptane		5.40179E-07		5.40179E-07										3.77448E-07			8.33095E-07	
Methylcyclohexane		4.25850E-06		4.25850E-06										3.10619E-06			6.64786E-06	
Toluene		5.95953E-05		5.95953E-05										4.56871E-05			9.31469E-05	
Octane		2.82078E-07		2.82078E-07										1.99620E-07			2.60134E-07	
Ethylbenzene		2.84232E-05		2.84232E-05										1.87073E-05			2.64754E-05	
m-Xylene		1.66613E-05		1.66613E-05										1.16043E-05			1.48379E-05	
o-Xylene		5.51943E-05		5.51943E-05										3.72877E-05			4.48099E-05	
Nonane		7.54627E-08		7.54627E-08										4.48347E-08			2.99207E-08	
C10+		1.99179E-07		1.99179E-07										1.53175E-07			2.45159E-09	
Mass Fraction		**%**	**%**	**%**	**%**	**%**	**%**	**%**	**%**	**%**	**%**	**%**	**%**	**%**	**%**	**%**	**%**	**%**
Water		99.9617		99.9617										99.8612			99.9522	
H2S		0		0										0			0	
Nitrogen		9.22836E-05		9.22836E-05										0.000484590			2.87682E-05	
Carbon Dioxide		0.00246902		0.00246902										0.00868501			0.00360761	
Methane		0.0218165		0.0218165										0.0946037			0.0168258	
Ethane		0.00990787		0.00990787										0.0285778			0.0190391	
Propane		0.00180743		0.00180743										0.00390916			0.00427123	
Isobutane		0.000302085		0.000302085										0.000467413			0.000727478	
n-Butane		0.000627733		0.000627733										0.00100998			0.00151232	
Isopentane		0.000143993		0.000143993										0.000158611			0.000332396	
n-Pentane		4.35202E-05		4.35202E-05										5.46459E-05			9.91895E-05	
2-Methylpentane		4.71627E-06		4.71627E-06										4.55616E-06			9.86372E-06	
3-Methylpentane		7.91226E-06		7.91226E-06										7.35453E-06			1.63741E-05	
n-Hexane		4.28345E-05		4.28345E-05										3.91705E-05			8.52820E-05	
Methylcyclopentane		6.14892E-06		6.14892E-06										5.83164E-06			1.25217E-05	
Benzene		8.98178E-05		8.98178E-05										8.38896E-05			0.000185885	
2-Methylhexane		3.53415E-06		3.53415E-06										2.32018E-06			6.00698E-06	
3-Methylhexane		3.47571E-06		3.47571E-06										2.22652E-06			5.76494E-06	
Heptane		3.00434E-06		3.00434E-06										2.09919E-06			4.63311E-06	
Methylcyclohexane		2.32082E-05		2.32082E-05										1.69276E-05			3.62271E-05	
Toluene		0.000304781		0.000304781										0.000233643			0.000476333	
Octane		1.78846E-06		1.78846E-06										1.26560E-06			1.64920E-06	
Ethylbenzene		0.000167490		0.000167490										0.000110233			0.000156000	
m-Xylene		9.81805E-05		9.81805E-05										6.83784E-05			8.74287E-05	
o-Xylene		0.000325245		0.000325245										0.000219718			0.000264033	
Nonane		5.37207E-07		5.37207E-07										3.19159E-07			2.12985E-07	
C10+		1.98004E-06		1.98004E-06										1.52266E-06			2.43694E-08	
Mass Flow		**lb/h**	**lb/h**	**lb/h**	**lb/h**	**lb/h**	**lb/h**	**lb/h**	**lb/h**	**lb/h**	**lb/h**	**lb/h**	**lb/h**	**lb/h**	**lb/h**	**lb/h**	**lb/h**	**lb/h**
Water		0		0										7328.26			0.130542	
H2S		0		0										0			0	
Nitrogen		0		0										0.0355614			3.75726E-08	
Carbon Dioxide		0		0										0.637345			4.71170E-06	
Methane		0		0										6.94244			2.19753E-05	
Ethane		0		0										2.09717			2.48659E-05	
Propane		0		0										0.286871			5.57842E-06	
Isobutane		0		0										0.0343008			9.50119E-07	
n-Butane		0		0										0.0741168			1.97515E-06	
Isopentane		0		0										0.0116396			4.34124E-07	
n-Pentane		0		0										0.00401016			1.29546E-07	
2-Methylpentane		0		0										0.000334351			1.28825E-08	
3-Methylpentane		0		0										0.000539708			2.13853E-08	
n-Hexane		0		0										0.00287451			1.11382E-07	
Methylcyclopentane		0		0										0.000427952			1.63539E-08	
Benzene		0		0										0.00615619			2.42774E-07	
2-Methylhexane		0		0										0.000170265			7.84538E-09	
3-Methylhexane		0		0										0.000163392			7.52927E-09	
Heptane		0		0										0.000154048			6.05105E-09	

Methylcyclohexane		0		0										0.00124222			4.73142E-08	
Toluene		0		0										0.0171458			6.22112E-07	
Octane		0		0										9.28757E-05			2.15393E-09	
Ethylbenzene		0		0										0.00808940			2.03743E-07	
m-Xylene		0		0										0.00501791			1.14186E-07	
o-Xylene		0		0										0.0161239			3.44838E-07	
Nonane		0		0										2.34213E-05			2.78167E-10	
C10+		0		0										0.000111740			3.18275E-11	

Process Streams		HP Separator Gas	HP Separator Water	HP Separator Oil	OT Flash Gas	Sales Oil	Gas	Water	Oil	Produced Water	PWT Flash Gas	Oil W/B	Water W/B	Well Stream	LP Separator Oil	LP Separator Gas	r recovery by VRU (to	Total gas to sale
Phase: Heavy Liquid	Status	Solved	Solved	Solved	Solved	Solved	Solved	Solved	Solved	Solved	Solved	Solved	Solved	Solved	Solved	Solved	Solved	Solved
Property	Units																	
Temperature	°F	70.0		70.0										84.0982			70	
Pressure	psig	169		169										1000			169	
Mole Fraction Vapor	%	0		0										0			0	
Mole Fraction Light Liquid	%	0		0										0			0	
Mole Fraction Heavy Liquid	%	100		100										100			100	
Molecular Weight	lb/lbmol	18.0		18.0										18.0169			18.0177	
Mass Density	lb/ft^3	62.3		62.3										62.0969			62.2669	
Molar Flow	lbmol/h	0.0		0.0										407.308			0.00724869	
Mass Flow	lb/h	0.0		0.0										7338.45			0.130604	
Vapor Volumetric Flow	MCFH	0.0		0.0										0.118177			2.09750E-06	
Liquid Volumetric Flow	Mbbl/d	0.0		0.0										0.505158			8.96592E-06	
Std Vapor Volumetric Flow	MMSCFD	0.0		0.0										3.70960			6.60183E-05	
Std Liquid Volumetric Flow	Mbbl/d	0.0		0.0										0.504381			8.95881E-06	
Compressibility		0.009		0.009										0.0504510			0.00935130	
Specific Gravity		0.998		0.998										0.995637			0.998362	
API Gravity		10.0		10.0										10.0954			10.0325	
Enthalpy	MMBtu/h	0.0		0.0										-49.9375			-0.000891408	
Mass Enthalpy	Btu/lb	-6825.8		-6825.8										-6804.91			-6825.25	
Mass Cp	Btu/(lb*°F)	1.0		1.0										0.980519			0.982136	
Ideal Gas CpCv Ratio		1.326		1.326										1.32508			1.32579	
Dynamic Viscosity	cP	1.0		1.0										0.840515			0.995355	
Kinematic Viscosity	cSt	1.0		1.0										0.844996			0.997930	
Thermal Conductivity	Btu/(h*ft*°F)	0.3		0.3										0.351542			0.346479	
Surface Tension	lbf/ft	0.005		0.005										0.00491531			0.00502891	
Net I.G. Heating Value	Btu/ft^3	0.4		0.4										1.30293			0.433252	
Net Liquid Heating Value	Btu/lb	-1051.9		-1051.9										-1030.91			-1050.17	
Gross I.G. Heating Value	Btu/ft^3	50.7		50.7										51.6854			50.7683	
Gross Liquid Heating Value	Btu/lb	8.2		8.2										30.3			10.0	

November 5, 2014

FESCO, Ltd.
1100 FESCO Avenue - Alice, Texas 78332

For: Antero Resources Appalachian Corp.
1615 Wynkoop Street
Denver, Colorado 80202

Sample: Gaskins No. 1H
First Stage Separator Hydrocarbon Liquid
Sampled @ 174 psig & 75 °F

Date Sampled: 10/14/14 Job Number: 45834.002

CHROMATOGRAPH EXTENDED ANALYSIS - GPA 2186-M

COMPONENT	MOL %	LIQ VOL %	WT %
Nitrogen	0.022	0.005	0.006
Carbon Dioxide	0.014	0.005	0.006
Methane	4.980	1.779	0.750
Ethane	5.236	2.952	1.478
Propane	5.288	3.071	2.189
Isobutane	1.728	1.192	0.943
n-Butane	4.222	2.806	2.303
2,2 Dimethylpropane	0.118	0.095	0.080
Isopentane	3.182	2.453	2.155
n-Pentane	3.622	2.768	2.453
2,2 Dimethylbutane	0.207	0.182	0.167
Cyclopentane	0.000	0.000	0.000
2,3 Dimethylbutane	0.334	0.289	0.270
2 Methylpentane	2.171	1.900	1.756
3 Methylpentane	1.478	1.272	1.195
n-Hexane	3.401	2.949	2.751
Heptanes Plus	63.998	76.283	81.498
Totals:	100.000	100.000	100.000

Characteristics of Heptanes Plus:

Specific Gravity	0.7603	(Water=1)
°API Gravity	54.61	@ 60°F
Molecular Weight	135.7	
Vapor Volume	17.79	CF/Gal
Weight	6.33	Lbs/Gal

Characteristics of Total Sample:

Specific Gravity	0.7117	(Water=1)
°API Gravity	67.33	@ 60°F
Molecular Weight	106.5	
Vapor Volume	21.20	CF/Gal
Weight	5.93	Lbs/Gal

Base Conditions: 14.850 PSI & 60 °F

Certified: FESCO, Ltd. - Alice, Texas

Analyst: XG
Processor: XGdjv
Cylinder ID: W-1001

David Dannhaus 361-661-7015

TANKS DATA INPUT REPORT - GPA 2186-M

COMPONENT	Mol %	LiqVol %	Wt %
Carbon Dioxide	0.014	0.005	0.006
Nitrogen	0.022	0.005	0.006
Methane	4.980	1.779	0.750
Ethane	5.236	2.952	1.478
Propane	5.288	3.071	2.189
Isobutane	1.728	1.192	0.943
n-Butane	4.340	2.901	2.383
Isopentane	3.182	2.453	2.155
n-Pentane	3.622	2.768	2.453
Other C-6's	4.190	3.642	3.389
Heptanes	11.349	10.668	10.446
Octanes	16.156	16.097	16.471
Nonanes	8.143	9.394	9.702
Decanes Plus	24.480	37.097	41.155
Benzene	0.125	0.074	0.091
Toluene	0.761	0.537	0.658
E-Benzene	0.837	0.681	0.834
Xylenes	2.148	1.735	2.140
n-Hexane	3.401	2.949	2.751
2,2,4 Trimethylpentane	0.000	0.000	0.000
Totals:	100.000	100.000	100.000

Characteristics of Total Sample:

Specific Gravity	0.7117	(Water=1)
°API Gravity	67.33	@ 60°F
Molecular Weight	106.5	
Vapor Volume	21.20	CF/Gal
Weight	5.93	Lbs/Gal

Characteristics of Decanes (C10) Plus:

Specific Gravity	0.7895	(Water=1)
Molecular Weight	179.1	

Characteristics of Atmospheric Sample:

°API Gravity	60.81	@ 60°F
Reid Vapor Pressure (ASTM D-5191)	6.09	psi

QUALITY CONTROL CHECK			
	Sampling Conditions	Test Samples	
Cylinder Number	------	W-1001*	W-1020
Pressure, PSIG	174	169	167
Temperature, °F	75	70	70

* Sample used for analysis

TOTAL EXTENDED REPORT - GPA 2186-M

COMPONENT	Mol %	LiqVol %	Wt %
Nitrogen	0.022	0.005	0.006
Carbon Dioxide	0.014	0.005	0.006
Methane	4.980	1.779	0.750
Ethane	5.236	2.952	1.478
Propane	5.288	3.071	2.189
Isobutane	1.728	1.192	0.943
n-Butane	4.222	2.806	2.303
2,2 Dimethylpropane	0.118	0.095	0.080
Isopentane	3.182	2.453	2.155
n-Pentane	3.622	2.768	2.453
2,2 Dimethylbutane	0.207	0.182	0.167
Cyclopentane	0.000	0.000	0.000
2,3 Dimethylbutane	0.334	0.289	0.270
2 Methylpentane	2.171	1.900	1.756
3 Methylpentane	1.478	1.272	1.195
n-Hexane	3.401	2.949	2.751
Methylcyclopentane	0.719	0.536	0.568
Benzene	0.125	0.074	0.091
Cyclohexane	0.721	0.517	0.570
2-Methylhexane	2.617	2.565	2.462
3-Methylhexane	2.207	2.135	2.075
2,2,4 Trimethylpentane	0.000	0.000	0.000
Other C-7's	1.175	1.111	1.094
n-Heptane	3.910	3.803	3.678
Methylcyclohexane	3.398	2.880	3.132
Toluene	0.761	0.537	0.658
Other C-8's	9.031	9.193	9.343
n-Octane	3.727	4.025	3.996
E-Benzene	0.837	0.681	0.834
M & P Xylenes	0.836	0.684	0.833
O-Xylene	1.311	1.051	1.307
Other C-9's	5.402	6.142	6.401
n-Nonane	2.741	3.252	3.300
Other C-10's	5.326	6.654	7.062
n-decane	1.836	2.375	2.452
Undecanes(11)	4.811	6.168	6.639
Dodecanes(12)	3.141	4.350	4.747
Tridecanes(13)	2.308	3.427	3.792
Tetradecanes(14)	1.592	2.532	2.839
Pentadecanes(15)	1.165	1.986	2.254
Hexadecanes(16)	0.846	1.540	1.762
Heptadecanes(17)	0.634	1.221	1.410
Octadecanes(18)	0.560	1.134	1.318
Nonadecanes(19)	0.448	0.946	1.106
Eicosanes(20)	0.328	0.719	0.845
Heneicosanes(21)	0.269	0.621	0.735
Docosanes(22)	0.225	0.542	0.645
Tricosanes(23)	0.175	0.436	0.522
Tetracosanes(24)	0.146	0.378	0.455
Pentacosanes(25)	0.100	0.269	0.324
Hexacosanes(26)	0.099	0.276	0.334
Heptacosanes(27)	0.089	0.255	0.311
Octacosanes(28)	0.064	0.192	0.235
Nonacosanes(29)	0.061	0.188	0.230
Triacontanes(30)	0.048	0.151	0.186
Hentriacontanes Plus(31+)	0.209	0.737	0.950
Total	100.000	100.000	100.000

October 30, 2014

FESCO, Ltd.
1100 Fesco Avenue - Alice, Texas 78332

For: Antero Resources Appalachian Corp.
1615 Wynkoop Street
Denver, Colorado 80202

Date Sampled: 10/14/14

Date Analyzed: 10/25/14

Sample: Gaskins No. 1H

Job Number: J45834

FLASH LIBERATION OF HYDROCARBON LIQUID		
	First Stage Separator HC Liquid	Stock Tank
Pressure, psig	174	0
Temperature, °F	75	70
Gas Oil Ratio (1)	------	136
Gas Specific Gravity (2)	------	1.226
Separator Volume Factor (3)	1.0823	1.000

STOCK TANK FLUID PROPERTIES	
Shrinkage Recovery Factor (4)	0.9240
Oil API Gravity at 60 °F	60.81
Reid Vapor Pressure, psi (5)	6.09

Quality Control Check			
	Sampling Conditions	Test Samples	
Cylinder No.	------	W-1001*	W-1020
Pressure, psig	174	169	167
Temperature, °F	75	70	70

(1) - Scf of flashed vapor per barrel of stock tank oil
(2) - Air = 1.000
(3) - Separator volume / Stock tank volume
(4) - Fraction of first stage separator liquid
(5) - Absolute pressure at 100 deg F
Analyst: T. G.
* Sample used for flash study
Base Conditions: 14.85 PSI & 60 °F

Certified: FESCO, Ltd. - Alice, Texas

David Dannhaus 361-661-7015

October 28, 2014

FESCO, Ltd.
1100 Fesco Ave. - Alice, Texas 78332

For: Antero Resources Appalachian Corp.
1615 Wynkoop Street
Denver, Colorado 80202

Sample: Gaskins No. 1H
Gas Evolved from Hydrocarbon Liquid Flashed
From 174 psig & 75 °F to 0 psig & 70 °F

Date Sampled: 10/14/14 Job Number: 45834.001

CHROMATOGRAPH EXTENDED ANALYSIS - GPA 2286

COMPONENT	MOL%	GPM
Hydrogen Sulfide*	< 0.001	
Nitrogen	0.065	
Carbon Dioxide	0.114	
Methane	33.358	
Ethane	29.183	7.866
Propane	19.082	5.299
Isobutane	3.640	1.201
n-Butane	6.763	2.149
2-2 Dimethylpropane	0.092	0.035
Isopentane	2.212	0.815
n-Pentane	1.818	0.664
Hexanes	1.906	0.792
Heptanes Plus	1.767	0.789
Totals	100.000	19.609

Computed Real Characteristics Of Heptanes Plus:

Specific Gravity	3.585	(Air=1)
Molecular Weight	102.61	
Gross Heating Value	5482	BTU/CF

Computed Real Characteristics Of Total Sample:

Specific Gravity	1.226	(Air=1)
Compressibility (Z)	0.9883	
Molecular Weight	35.09	
Gross Heating Value		
Dry Basis	2069	BTU/CF
Saturated Basis	2034	BTU/CF

*Hydrogen Sulfide tested in laboratory by: Stain Tube Method (GPA 2377)
Results: 0.063 Gr/100 CF, 1.0 PPMV or 0.0001 Mol %

Base Conditions: 14.850 PSI & 60 Deg F

Certified: FESCO, Ltd. - Alice, Texas

Analyst: MR
Processor: IM
Cylinder ID: FL-11S

David Dannhaus 361-661-7015

CHROMATOGRAPH EXTENDED ANALYSIS - GPA 2286
TOTAL REPORT

COMPONENT	MOL %	GPM	WT %
Hydrogen Sulfide*	< 0.001		< 0.001
Nitrogen	0.065		0.052
Carbon Dioxide	0.114		0.143
Methane	33.358		15.252
Ethane	29.183	7.866	25.011
Propane	19.082	5.299	23.982
Isobutane	3.640	1.201	6.030
n-Butane	6.763	2.149	11.204
2,2 Dimethylpropane	0.092	0.035	0.189
Isopentane	2.212	0.815	4.549
n-Pentane	1.818	0.664	3.738
2,2 Dimethylbutane	0.090	0.038	0.221
Cyclopentane	0.000	0.000	0.000
2,3 Dimethylbutane	0.134	0.055	0.329
2 Methylpentane	0.608	0.254	1.493
3 Methylpentane	0.376	0.155	0.924
n-Hexane	0.698	0.289	1.714
Methylcyclopentane	0.073	0.025	0.175
Benzene	0.024	0.007	0.053
Cyclohexane	0.092	0.032	0.221
2-Methylhexane	0.188	0.088	0.537
3-Methylhexane	0.185	0.085	0.528
2,2,4 Trimethylpentane	0.000	0.000	0.000
Other C7's	0.199	0.087	0.563
n-Heptane	0.245	0.114	0.700
Methylcyclohexane	0.199	0.081	0.557
Toluene	0.041	0.014	0.108
Other C8's	0.273	0.128	0.858
n-Octane	0.078	0.040	0.254
Ethylbenzene	0.003	0.001	0.009
M & P Xylenes	0.019	0.007	0.057
O-Xylene	0.003	0.001	0.009
Other C9's	0.088	0.045	0.317
n-Nonane	0.020	0.011	0.073
Other C10's	0.028	0.016	0.113
n-Decane	0.006	0.004	0.024
Undecanes (11)	0.003	0.002	0.013
Totals	100.000	19.609	100.000

Computed Real Characteristics Of Total Sample:

Specific Gravity	1.226	(Air=1)
Compressibility (Z)	0.9883	
Molecular Weight	35.09	
Gross Heating Value		
Dry Basis	2069	BTU/CF
Saturated Basis	2034	BTU/CF

C6+ Gas Analysis Report

Gas Analytical

Report Date: Feb 3, 2016 8:50a

Client:	Antero Resources	Date Sampled:	Jan 28, 2016 8:55a
Site:	Deano Unit 2H	Analysis Date:	Feb 2, 2016 3:01p
Field No:	9998	Collected By:	Jason Swiger
Meter:	40675	Date Effective:	Jan 28, 2016 12:00a
Source Laboratory	Clarksburg (Bridgeport), WV	Sample Pressure (PSI):	200.0
Lab File No:	**X_CH1-9282.CHR**	Sample Temp (°F):	64
Sample Type:	Spot	Field H2O:	64
Reviewed By:		Field H2S:	No Test

Component	Mol %	Gal/MSCF
Methane	81.3211	
Ethane	13.7570	3.66
Propane	2.5368	0.70
I-Butane	0.4674	0.15
N-Butane	0.7709	0.24
I-Pentane	0.2029	0.07
N-Pentane	0.1570	0.06
Nitrogen	0.3903	
Oxygen	<MDL	
Carbon Dioxide	0.1666	
Hexanes+	0.2300	0.09
TOTAL	100.0000	4.98

Analytical Results at Base Conditions (Real)		
BTU/SCF (Dry):	1,201.3172	BTU/ft³
BTU/SCF (Saturated):	1,181.2867	BTU/ft³
PSIA:	14.730	PSI
Temperature (°F):	60.00	°F
Z Factor (Dry):	0.99686	
Z Factor (Saturated):	0.99647	

Analytical Results at Contract Conditions (Real)		
BTU/SCF (Dry):	1,201.3172	BTU/ft³
BTU/SCF (Saturated):	1,181.2867	BTU/ft³
PSIA:	14.730	PSI
Temperature (°F):	60.00	°F
Z Factor (Dry):	0.99686	
Z Factor (Saturated):	0.99647	

Calculated Specific Gravities			
Ideal Gravity:	0.6794	Real Gravity:	0.6813
Molecular Wt:	19.6775 lb/lbmol		

Gross Heating Values are Based on:
GPA 2145-09, 2186
Compressibility is Calculated using AGA-8.

Source	Date	Notes

<MDL = Less than Method Detection Limits, NG = Not Given, NT = Not Tested

Attachment T
Facility-wide Emissions Summary Sheet(s)

ATTACHMENT T – FACILITY-WIDE CONTROLLED EMISSIONS SUMMARY SHEET

List all sources of emissions in this table. Use extra pages if necessary.

Emission Point ID#	NOx		CO		VOC		SO2		PM10		PM2.5		GHG (CO2e)	
	lb/hr	tpy	lb/hr	tpy	lb/hr	tpy	lb/hr	tpy	lb/hr	tpy	lb/hr	tpy	lb/hr	tpy
EP-HR001									3.4579	1.7251				
EP-PCV					0.0732	0.3207							10.4002	45.5529
F001					3.7621	16.4779							98.6228	431.9677
EP-L001					12.8451	6.0071							11.8525	5.5429
EP-L002					5.47E-04	1.99E-04							0.8333	0.3042
EP-ENG001 through EP-ENG002 (emissions per EPN)	0.0625	0.2738	0.4126	1.8073	0.0186	0.0817	0.0004	0.0016	0.0060	0.0262	0.0060	0.0262	72.9191	319.3857
EP-GPU001 through EP-GPU0011 (emissions per EPN)	0.1249	0.5469	0.1049	0.4594	0.0069	0.0301	7.49E-04	0.0033	0.0095	0.0416	0.0095	0.0416	149.8355	656.2796
EP-LH001 through EP-LH0011 (emissions per EPN)	0.1665	0.7292	0.1398	0.6125	0.0092	0.0401	0.0010	0.0044	0.0127	0.0554	0.0127	0.0554	199.7807	875.0395
EP-EC001 through EP-EC003 (emissions per EPN)	0.8173	3.5796	3.7211	16.2982	0.5510	2.4132	7.56E-06	3.31E-05	0.0037	0.0162	0.0028	0.0122	140.1416	613.8200
TOTAL	5.7816	25.3236	14.6805	64.3005	1.8664	8.1750	0.0200	0.0876	0.2666	1.1679	0.2639	1.1557	4412.0415	19324.7417

Annual emissions shall be based on 8760 hours per year of operation for all emission units except emergency generators.

According to 45CSR14 Section 2.43.e, fugitive emissions are not included in the major source determination because it is not listed as one of the source categories in Table 1. Therefore, fugitive emissions shall not be included in the PTE above

ATTACHMENT T – FACILITY-WIDE CONTROLLED EMISSIONS SUMMARY SHEET

List all sources of emissions in this table. Use extra pages if necessary.

Emission Point ID#	Formaldehyde		Benzene		Toluene		Ethylbenzene		Xylenes		Hexane		Total HAPs	
	lb/hr	tpy	lb/hr	tpy	lb/hr	tpy	lb/hr	tpy	lb/hr	tpy	lb/hr	tpy	lb/hr	tpy
EP-HR001														
EP-PCV			0.00E+00	0.00E+00	0.00E+00	0.00E+00	0.00E+00	0.00E+00	0.00E+00	0.00E+00	0.0063	0.0277	0.0063	0.0277
F001			0.0030	0.0133	0.0219	0.0958	0.0277	0.1214	0.0711	0.3113	0.1849	0.8097	0.3085	1.3514
EP-L001			0.0002	0.0001	0.0019	0.0009	0.0023	0.0011	0.0058	0.0027	0.0812	0.0380	0.0913	0.0427
EP-L002			2.99E-07	1.09E-07	5.75E-07	2.10E-07	1.94E-07	7.08E-08	4.42E-07	1.61E-07	2.80E-09	1.02E-09	1.51E-06	5.52E-07
EP-ENG001 through EP-ENG002 (emissions per EPN)	0.0129	0.0566	0.0010	0.0044	0.0004	0.0015	1.56E-05	6.84E-05	1.23E-04	5.38E-04	0.00E+00	0.00E+00	0.0145	0.0633
EP-GPU001 through EP-GPU0011 (emissions per EPN)	9.36E-05	4.10E-04	2.62E-06	1.15E-05	4.25E-06	1.86E-05	0.00E+00	0.00E+00	0.00E+00	0.00E+00	0.0022	0.0098	0.0024	0.0103
EP-LH001 through EP-LH0011 (emissions per EPN)	1.25E-04	5.47E-04	3.50E-06	1.53E-05	5.66E-06	2.48E-05	0.00E+00	0.00E+00	0.00E+00	0.00E+00	0.0030	0.0131	0.0031	0.0137
EP-EC001 through EP-EC003 (emissions per EPN)	9.45E-07	4.14E-06	0.0001	0.0006	0.0006	0.0026	3.76E-04	0.0016	0.0008	0.0037	0.0477	0.2089	0.0496	0.2175
TOTAL	0.0282	0.1237	0.0024	0.0107	0.0026	0.0115	0.0012	0.0051	0.0028	0.0122	0.2008	0.8794	0.2382	1.0433

Annual emissions shall be based on 8760 hours per year of operation for all emission units except emergency generators.

According to 45CSR14 Section 2.43.e, fugitive emissions are not included in the major source determination because it is not listed as one of the source categories in Table 1. Therefore, fugitive emissions shall not be included in the PTE above

Attachment U
Class I Legal Advertisement

Attachment U

Air Quality Permit Notice
Notice of Application
Yvonne Well Pad
Antero Resources Corporation
Doddridge County, West Virginia

Notice is given that Antero Resources Corporation has applied to the West Virginia Department of Environmental Protection, Division of Air Quality, for a G70-C General Permit Modification for an Oil and Natural Gas Production facility located at 1199 Knights Fork Rd., near West Union in Doddridge County, West Virginia.

The latitude and longitude coordinates are: 39.34847 and -80.76965

The applicant estimates the increased potential to discharge the following Regulated Air Pollutants will be:

Pollutants	TOTALS (tpy):
NO_X	25.3236
CO	64.3005
$PM_{2.5}$	1.1557
PM_{10}	1.1679
VOC	14.1823
SO_2	0.0876
Formaldehyde	0.1237
Benzene	0.0107
Toluene	0.0115
Ethylbenzene	0.0051
Xylenes	0.0122
Hexane	0.8794
Total HAPs	1.0433

Proposed new equipment will be installed upon permit issuance. Startup of operation using new equipment is planned to begin on or about July 2017. Written comments will be received by the West Virginia Department of Environmental Protection, Division of Air Quality, 601 57th Street, SE, Charleston, WV 25304, for at least 30 calendar days from the date of publication of this notice.

Any questions regarding this permit application should be directed to the DAQ at (304) 926-0499, extension 1250, during normal business hours.
Dated this the __ day of _____, 2016

By: Antero Resources Corporation
Barry Schatz
Senior Environmental & Regulatory Manager
1615 Wynkoop Street
Denver, CO 80202

www.ghd.com