INTERNAL PERMITTING DOCUMENT TRACKING MANIFEST

Company Name Markwest

Permitting Action Number R13-2514/C Total Days 274 DAQ Days 71

Permitting Action:

- ○ Permit Determination
- ○ General Permit
- ○ Administrative Update
- ○ Temporary
- ○ Relocation
- ○ Construction
- ⊗ Modification
- ○ PSD (Rule 14)
- ○ NNSR (Rule 19)

Documents Attached:

- ⊗ Engineering Evaluation/Memo
- ⊗ Draft Permit
- ⊗ Notice
- ○ Denial
- ○ Final Permit/General Permit Registration
- ⊗ Completed Database Sheet
- ○ Withdrawal
- ○ Letter
- ○ Other *(specify)*_____

Date	From	To	Action Requested
9/11	EE	BW	Please Review for Public Comment.
10/15	BW	EP	See comments - Address-Cite to Notice

NOTE: Retain a copy of this manifest for your records when transmitting your document(s).

Permit / Application Information Sheet
Division of Environmental Protection
West Virginia Office of Air Quality

Company:	MarkWest Liberty Midstream & Resources			**Facility:**	Sherwood
Region:	8	**Plant ID:**	017-00034	**Application #:**	13-2914C
Engineer:	Andrews, Edward S.			**Category:**	
Physical Address:	CR 18/6 SMITHBURG WV 26426			SIC: [1321] OIL AND GAS EXTRACTION - NATURAL GAS LIQUIDS NAICS: [211112] Natural Gas Liquid Extraction	
County:	Doddridge				
Other Parties:	Contact - Wheldon, Nathan 303-542-0686 Contact - Meyer, Leanne 303-542-0686				

Information Needed for Database and AIRS
1. Need valid physical West Virginia address with zip

Regulated Pollutants

CO	Carbon Monoxide	106.650 TPY
PM10	Particulate Matter < 10 um	18.420 TPY
VOC	Volatile Organic Compounds (Reactive organic gases)	165.950 TPY
PM2.5	Particulate Matter < 2.5 um	18.420 TPY
THAP	Total HAP Pollutants	18.420 TPY
NOX	Nitrogen Oxides (including NO, NO2, NO3, N2O3, N2O4, and N2O5)	118.090 TPY
CO2E	Carbon Dioxide Equivalents	2229500.000 TPY

Summary from this Permit 13-2914C

Air Programs	Applicable Regulations
	02 07 10 60 A

Fee Program	Fee	Application Type
5A	$2,000.00	MODIFICATION

Activity Dates

APPLICATION RECIEVED	12/11/2014
APPLICATION FEE PAID	12/15/2014
ASSIGNED DATE	12/15/2014
APPLICANT PUBLISHED LEGAL AD	01/15/2015
APPLICATION DEEMED COMPLETE	07/02/2015

Notes from Database
Permit Note: This modication is for 3 additional extraction plants, a de-ethanizer, two additional stablizers heaters, and a replacement flare for flare FL-991. Also, the existing dehy is control by a seprate enclosed combustion deivce that was never indentified until this modification. R13-2914B required the still vent to be controlled by FL-991. Plant is subjcet to Subpoart JJJJ for the engines, Subpart OOOO for the compressor rod packing for the existing compressors in wet gas service, the storage tanks & VRU are subject to the VRU requirements Cover & closed vent requirements of Subpart OOOO but is excluded from the VOC reduction requirement, The facility is subject to Subpart VVa LDAR by Subpart OOOO. The source is using AWP to comply with the LDAR with a OGI (60.18).

NON-CONFIDENTIAL Please note, this information sheet is not a substitute for file research and is limited to data entered into the AIRTRAX database.

Company ID: 017-00034
Company: MarkWest Liberty Midstream & R
Printed: 09/11/2015
Engineer: Andrews, Edward S.

west virginia department of environmental protection

Division of Air Quality
601 57th Street, SE
Charleston, WV 25304-2345
Phone: 304 926 0475 • Fax: 304 926 0479

Earl Ray Tomblin, Governor
Randy C. Huffman, Cabinet Secretary
www.dep.wv.gov

ENGINEERING EVALUATION/FACT SHEET

B ACKGROUND INFORMATION

Application No.:	R13-2914C
Plant ID No.:	017-00034
Applicant:	MarkWest Liberty Midstream & Resources LLC (MarkWest)
Facility Name:	Sherwood Gas Plant
Location:	Smithburg
NAICS Code:	211112
Application Type:	Modification
Received Date:	December 11, 2014
Engineer Assigned:	Edward S. Andrews, P.E.
Fee Amount:	$2,000.00
Date Received:	December 15, 2014
Complete Date:	July 2, 2015
Due Date:	September 30, 2015
Applicant Ad Date:	January 15, 2015
Newspaper:	*The Exponent Telegram*
UTM's:	Easting: 528.6 km Northing: 4,377.7 km Zone: 17
Description:	This action is the installation and operation of three addition extraction units and one de-ethanizer unit. This modification will include the replacement of the existing emergency flare.

DESCRIPTION OF PROCESS

MarkWest Liberty Midstream & Resources LLC (MarkWest) owns and operates the Sherwood Gas Plant which is located nearest to Smithburg, West Virginia. The Sherwood Gas Plant is a gas processing plant and compressor station to process field gas from nearby wells.

The natural gas inlet stream from surrounding area wells enters the facility through an inlet separator prior to passing through the tri-ethylene glycol (TEG) dehydration unit, which is designed to remove unwanted liquids from the gas stream. The rich TEG is routed to the reboiler where water and organic impurities are driven from the TEG as the reboiler is heated.

High pressure natural gas enters the cryogenic plant and passes through a molecular sieve to remove excess water in the gas stream. The dry natural gas will be cooled through a cryogenic plant with mechanical refrigeration, which serves to remove propane and heavier hydrocarbons in the gas stream. At this point the gas is ready for compression and will pass through one of the natural gas fired compressor engines prior to entering the downstream pipeline to a distribution or processing company. Liquids will be transported via pipeline to another facility. Liquid storage tanks at the gas plant will be pressurized with no emissions to the atmosphere under normal conditions. Storage tanks at the compressor station will be atmospheric tanks with emissions controlled with a vapor recovery unit (VRU) rated at 98% recovery efficiency. Under normal operating conditions electric pumps will be utilized to transfer the removed saltwater and hydrocarbons to another site for further processing. In emergency conditions truck loading may occur; however, the loading will be done in a closed loop system into pressurized vehicles so any emissions would be de minims. An emergency flare will be installed to burn vapors released from the reboiler, pressure relief valves in the deethanizer, and refrigeration plant in the event of an emergency.

The Sherwood Gas Plant is comprised of a number of cryogenic gas plants, each with a nameplate capacity for processing natural gas of 200 million (MM) standard cubic feet (scf) per day (d) with a maximum capacity of 230 MMscfd of natural gas. This proposed expansion project includes three addition processing plants each with the ability to process a maximum of 230 MMscfd for total of nine (9) plants with the nominal processing rate up to 1,800 MMscfd with a maximum of 2,070 MMscfd throughput for the facility. These processing plants will be identified as Sherwood VII, VIII, and IX.

These additional cryogenic gas plants will include a regenerative heater for the molecular sieve unit for each plant. Each heater will be equipped with a single burner that has a maximum design heat input rating of 18.00 MMBtu/hr.

Two additional stabilization heaters will be included as part of this project. The heaters provide process heat to stabilize the produce liquids at the facility. The heaters will have a maximum design heat input rating of 2.28 MMBtu/hr for each heater.

Due to pipeline restriction and gas customer's requirements, the outgoing gas or residue gas leaving must meet certain specifications. Currently MarkWest meets these requirements by injection of acceptable diluent gas into the outgoing natural gas. The issue with the residue gas is that the ethane content is too high which increases the heating value of the residue gas to unacceptable levels.

MarkWest proposes to install and operate a deethanizer unit at the Sherwood Gas Plant to further process the residue gas prior to exiting the facility. The deethanizer separates the ethane out of the residue gas stream using a deethanizer column. The proposed process that MarkWest plans to implement at the facility requires additional process heat.

A deethanizer heater with a maximum design heat input of 119.2 MMBtu/hr will be required for this process. The heater will be configured with eight (8) burners with each burner having a normal heat release rate of 14.9 MMBtu/hr. These burners will employ flue gas recirculation technologies with low NO_x burner designs to minimize combustion related emissions from the heat.

As part of the expansion project, MarkWest proposed to replace the existing emergency flare. The current flare (FL-991) is a pressured assisted elevated flare. This flare is used to destroy the stream that was released by pressure relief devices and purge gas. Purge gas is used to ensure that the flare header is free of oxygen at all times.

The proposed replacement flare will be an air-assisted flare to handle high flow rate releases with a non-assisted piggy-back flare for low flow releases.

SITE INSPECTION

On April 1 and 21, 2015, Mr. James Jarrett, an compliance engineer assigned to the Compliance and Enforcement Section of the agency, and the writer conducted a site visit of the Sherwood Gas Plant. Mr. Jarrett and the writer met with MarkWest' s environmental compliance personal assigned to oversee compliance of the Sherwood Gas Plant, which include Mr. Dale Gable, and other personnel assigned to the site. The main purpose of this visit was to gather information to assess the compliance status of the facility.

ESTIMATE OF EMISSION BY REVIEWING ENGINEER

Emissions associated with this application consist of the combustion emissions from the three mole sieve regeneration heaters (H-7711, H-8711, H-9711), hot oil heater (H-771), TEG dehydration unit (DH-001), TEG dehydration unit reboiler (RB-001), emergency flare (FL-991), storage tanks emissions (TNK-001), and fugitive emissions (FUG-001). The following table indicates which methodology was used in the emissions determination: The emissions change associated with this project is mainly combustion related emissions and fugitives from equipment leaks.

MarkWest used manufacturer's emission data to revise the emissions from the existing heaters and proposed new heaters except for the stabilization heaters. Most of the manufacturer's data predicted the concentration of oxides of nitrogen (NO_x), carbon monoxide (CO), and volatile organic compounds (VOCs) at 30 ppm, 50 ppm and 15 ppm respectively. The manufacturer for the hot oil heaters (H-4712, H-6712, and H-8712) had rated the NO_x concentration at 33 ppm. This manufacturer's emission data was based on 3% oxygen. The writer corrected these concentrations to 0% in accordance with Method 19. The emissions from the hot oil heaters and other pollutants for all of the heaters were estimated using emission

factors published in AP-42 Chapter 1.4. The emissions for all of the heaters were based on a maximum design heat input rating with no operational limitation on use.

Table #1 – Emission from the Heaters		
Emission Unit ID#	Heater Description	MDHI (MMBTU/hr)
H-711	Mole Sieve Regeneration Heater*	7.86
H-2711	Mole Sieve Regeneration Heater*	7.86
H-3711	Mole Sieve Regeneration Heater*	7.86
H-771	Hot Oil Heater	28.25
H-4711	Mole Sieve Regeneration Heater*	18.00
H-5711	Mole Sieve Regeneration Heater*	18.00
H-6711	Mole Sieve Regeneration Heater*	18.00
H-7711	Mole Sieve Regeneration Heater*	18.00
H-8711	Mole Sieve Regeneration Heater*	18.00
H-9711	Mole Sieve Regeneration Heater*	18.00
H-6712	Hot Oil Heater	6.60
H-4712	Hot Oil Heater	6.60
H-8712	Hot Oil Heater	6.60
H-742	Stabilization Heater	2.28
H-2742	Stabilization Heater	2.28
H-3742	Stabilization Heater	2.28
D1-H-782	DeEthanizer HMO Heater*	119.2
D1-H-741	DeEthanizer Regen Heater*	14.25
Total Maximum Design Heat Input		319.92

* - Process Heater per Subpart Dc or Subpart Db and 45 CSR 2.

The applicant revised the emissions from the existing heaters based on better emissions related data for NO_x, CO, and VOCs. The manufacturer's data was available for all of the heaters except the 2.28 MMBtu/hr Stabilization Heaters, which was based on emission factors from Chapter 1.4 of AP-42. The writer reviewed the emission estimates and noticed that the manufacturer's emission concentrations were at 3% oxygen content. The applicant should have corrected the potential emissions using this data to 0% oxygen in accordance with U.S. EPA Method 19. The following table list the potential emissions from the heaters with CO, NO_x, and VOC corrected to 0% oxygen.

Table #2 – Emission from the Heaters								
Emission Unit ID#	NO_x		CO		VOC		$PM/PM_{10}/PM_{2.5}$	
	lb/hr	tpy	lb/hr	tpy	lb/hr	tpy	lb/hr	tpy
H-711	0.29	1.25	0.29	1.27	0.14	0.60	0.06	0.25
H-2711	0.29	1.25	0.29	1.27	0.14	0.60	0.06	0.25
H-3711	0.29	1.25	0.29	1.27	0.14	0.60	0.06	0.25
H-771	1.03	4.50	1.04	4.56	0.49	2.16	0.21	0.91
H-4711	0.65	2.87	0.66	2.91	0.31	1.37	0.13	0.58
H-5711	0.65	2.87	0.66	2.91	0.31	1.37	0.13	0.58
H-6711	0.65	2.87	0.66	2.91	0.31	1.37	0.13	0.58
H-7711	0.65	2.87	0.66	2.91	0.31	1.37	0.13	0.58
H-8711	0.65	2.87	0.66	2.91	0.31	1.37	0.13	0.58
H-9711	0.65	2.87	0.66	2.91	0.31	1.37	0.13	0.58
H-6712	0.26	1.16	0.24	1.07	0.11	0.50	0.05	0.21
H-4712	0.26	1.16	0.24	1.07	0.11	0.50	0.05	0.21
H-8712	0.26	1.16	0.24	1.07	0.11	0.50	0.05	0.21
H-742	0.22	0.96	0.18	0.81	0.01	0.05	0.02	0.07
H-2742	0.22	0.96	0.18	0.81	0.01	0.05	0.02	0.07
H-3742	0.22	0.96	0.18	0.81	0.01	0.05	0.02	0.07
D1-H-782	4.13	18.09	4.19	18.35	1.98	8.67	0.83	3.65
D1-H-741	0.44	1.95	0.45	1.98	0.21	0.93	0.19	0.84
Total	11.81	51.87	11.77	51.80	5.32	23.43	2.4	10.47

The greenhouse gas emissions from all the heaters were totaled to be 374,462 pounds per hour and 164,084 tons per year of carbon dioxide equivalents (CO_2e). The potential greenhouse gas emissions will vary due to changes in the heating value of the residual gas burned in these emissions units.

The total HAPs from the proposed new heaters are illustrated in the following table.

Table #3 – Total HAPs from the Proposed New Heaters		
Unit #	Hourly Total HAPs (lb/hr)	Annual Total HAPs (tpy)
H-7711	0.03	0.14
H-8711	0.03	0.14
H-9711	0.03	0.14
H-8712	0.01	0.05
H-2742	0.004	0.02
H-3742	0.004	0.02
D1-H-782	0.22	0.95
D1-H-741	0.03	0.11
Total	0.358	1.57

The applicant determined the combustion related emissions from the replacement flare using emission factors published in AP-42, Chapter 1.4. MarkWest intends to only use the flare as a last resort. To ensure that the header connecting the pressured relief devices from the process units is maintained in an oxygen free environment, 11.5 scfm of purge gas, which will be residue gas, will be continuously vented through the header. There are seven pilot lights on the tip of the flare to ensure operation of the flare. Each pilot requires 1.26 scfm of gas, which equates to a total of 8.82 scfm. During non-venting operation of the flare, a total of 20.3 scfm of gas will be combusted by the flare, which equates to a heat input release rate of 1.34 MMBtu/hr.

MarkWest assumed the waste gas to be propane, which has a molecular weight of 44 lb-mole, specific volume of 8.365 ft^3 per pound, and a heating value of 2600 Btu/hr. Methane and ethane will make up a more significant portion of the gas than propane does. However, methane and ethane are not classified as VOCs under the Clean Air Act. After these two components, the next component in the highest quantity in the field gas and residue gas will be propane. Callidus, the flare manufacturer, rated the smokeless conditions from this particular flare at 200,000 pounds per hour. At this smokeless condition, the volumetric flow rate of propane would be 1,673,000 scfh.

MarkWest claimed that venting of the system would be approximately 5 minutes per event. The writer assumed 2 hours of venting at 200,000 pounds per hour per month, which equates to 40.2 MMscf per year.

The proposed flare has been designed to meet the criteria of 40 CFR 60.18. Therefore, the flare should be capable of achieving a destruction efficiency of 98% for VOC. Assuming the effluent going to the flare is 100% propane, the VOC potential from the flare is 4,000 pounds per hour and 48 tpy.

The writer used emission factors published in RG-360A/11 dated February 2012 by the Texas Commission on Environmental Quality to determine the CO and NO_x. These emissions are based on heat input from the purge gas, pilot lights and effluent, which is 4,351.14 MMBtu/hr and 1,161.133.78 MMBtu per year. At these heat inputs, the CO and NOx emissions rates are 1,198.7 pounds per hour and 600.45 pounds per hour respectively at venting conditions. The greenhouse gas potential from this flare is 570,000 pounds per hour and 7,527 tpy.

Fugitive emissions from this modification are mainly from equipment leaks. MarkWest used EPA's Protocol for Equipment Leaks Emission Estimates to predict VOC and HAPs emissions. The current facility is subject to the leak detection and repair requirements (LDAR) of Subpart OOOO and the proposed equipment will be subject to the same program. MarkWest accounted for the control effectiveness of this program when determining the equipment leak rate using EPA's protocol and the leak definition from Subpart OOOO, which refers to Subpart VVa to Part 60.

The fugitive potential of VOC emissions seems to be in question when comparing the pervious applications with this one, which is illustrated in the following table.

Table #4 Fugitive Emissions from Equipment Leaks			
Permit Application	Total No Components	inet Secre	HAPs (tpy)
R13-2914	1656	4.46	0.43
R13-2914A	3969	10.7	1.08
R13-2914B	5748	38.2	0.45
R13-2914C	9024	18.96	0.22

The following table list the number of components being monitoring under the LDAR program to include Sherwood V.

Table #5 Component List of Current Facility (not include Sherwood IV)		
Component		
Name	Code	Count
Valve	VLV	5,350*
Connector	CONN	10,750*
Pressure Relief Device	PRD	209*
Pump	PMP	31*
Compressor	COMP	11*
Total		16,351*

* - Listed in the Semi-Annual LDAR Report for 2015 filed on July 28, 2105

Using the recently reported lists of components, the writer estimated the fugitive potential of the current facility to be 27.9 tons of VOC per year and 0.33 tons of HAPs per year. MarkWest is currently permitted to install Sherwood IV which should be similar to Sherwood V. The writer used this count to project the component count for Sherwood IV and the three proposed units in the modification. The writer did not account for the deethanizer unit. The gas stream for this unit should have a VOC content of less than 1% by weight.

The estimated VOC and HAP emissions are based on the percentage of the gas or liquid stream that consists as VOCs and HAPs respectively. MarkWest has determined that the gas stream is made up of 11.48% of VOC and 0.18% of HAP. The light oil stream, which is Y grade NGL, contains 96.72% VOCs and 1.05% HAPs. The following table is the writer's estimate of potential VOC and HAPs emissions from equipment leaks from the Sherwood Gas Plant once the proposed modification has been completed.

Table #6 Projected Potential Fugitives with the Proposed Modification							
Component	Service Type	Current Component Count	Projected Count with Sherwood IV	Project Count with 3 Additional Extraction Units	TOC Emission Factor kg/hr/component	VOC Emissions (tpy)	HAP Emissions (tpy)
Connector	Gas	3428	2389	7588	1.84E-04	1.55	0.024
Flanges	Gas	2568	3347	5684	3.90E-04	2.46	0.039
Compressor Seals	Gas	11	13	19	8.80E-03	0.19	0.003
Valves	Gas	2944	3453	4980	7.09E-04	3.91	0.061
Other	Gas	209	243	345	8.80E-03	3.37	0.053
Connector	Light Oil	2850	3714	6306	1.84E-04	10.84	0.118
Flanges	Light Oil	1905	2482	4213	1.10E-04	4.33	0.079
Pump Seals	Light Oil	31	36	51	4.93E-03	2.35	0.025
Valves	Light Oil	2405	2822	4073	5.99E-04	22.79	0.247
Total		16351	18499	33259		51.79	0.649

MarkWest estimated the blowdown emissions from the compressor engines and extraction units. The blowdown from the compressors would be vented in an uncontrolled manner, which results in 1.03 tpy of VOCs and 0.049 tpy of HAPs. The extraction units would be vented to the flare. Thus, the blowdown from the units are controlled and accounted with the emissions from the flare.

The following table illustrates the previous potential emissions from the facility as permitted in R13-2914B and compared with the changes in this modification to determine the net change in permitted emissions.

Table #7 Facility Potential			
Pollutant	Permitted Emission under R13-2914B (tpy)	New Potential (tpy)	Net Change (tpy)
NO_x	77.97	118.09	40.12
CO	43.27	106.65	63.38
SO_2	0.52	0.97	0.45
$PM/PM_{10}/PM_{2.5}$	9.32	18.42	9.10
VOCs	86.05	165.95	79.90
Total HAP	15.53	18.42	2.89
CO_2e	120,736	222,950	102,214

REGULATORY APPLICABLILITY

Currently, the Sherwood Gas Extraction Plant is a non-major source under 45 CSR 14. The first step in determining applicability under PSD is to determine if the facility is major source. In determining if the facility is major one must determine if the Sherwood Gas Plant fall within any of the source categories listed in 45 CSR §14-2.43.a. The Sherwood Gas Plant does not have a combination of design heat input from fossil fuel boilers more than 250 MMBtu/hr. Heaters meeting the definition of Process Heater either in Subpart Db or Dc are not included in this total heat input for the facility. The total heat input of boilers at the Sherwood Plant is 55 MMBtu/hr. Thus, the Sherwood Gas Plant would have to have a potential to emit of any criteria pollutant at or greater than 250 tons per year (45 CSR §14-2.43.b.) to be classified as a major source.

Next step is to determine if fugitive emissions are to be included in the facility's potential to emit. The Sherwood Gas Plant does not fall within any of the source categories listed in Table 1 of 45 CSR §14-2.43.e. Therefore, only point source emissions are counted for major source applicability under PSD. The Sherwood Gas Plant does not have the potential to emit more than 250 tons per year of any single criteria pollutant and thus is not a major source under PSD. No further review is required under 45 CSR 14.

With regards to the National Ambient Air Quality Standards, Doddridge County is classified as attainment for all pollutants. Thus, no further review of this application with regards to 45 CSR 19, West Virginia Non-Attainment Permitting Rule is required.

The proposed changes in the application has the potential to exceed the modification threshold of 6 pounds per hour and 10 ton per year a CO, NO_x, and VOCs in 45 CSR 13, which requires a modification permit to install and operate these new emission units. Thus, the applicant filed a modification application, paid the filing and New Source Performance fees, and published a Class I Legal in The Exponent-Telegram on January 1, 2015.

The following discussion concerns existing applicable rules or regulations or potentially applicable rules the facility or proposed changes would be subject to:

45 CSR 2 (Rule 2); Subparts Db & Dc to Part 60 (Federal Regulations)

The existing gas plant and proposed changes calls for the use of heaters. Boilers or indirect heat exchangers are affected units under 45 CSR 2 and Subpart Db & Dc. However, a process heater that is primarily used to heat a material to initiate or promote a chemical reaction in which the materials participates as a reactant or catalyst are excluded as affected units under all three of these.

MarkWest claims that the mole sieve regeneration heaters (H-711, H-2711, H-3711, H-4711, H-5711, H-6711, H-7711, H-8711 & H-9711) and heaters for the de-ethanization unit (D1-H-782 & D1-H-741) are process heaters and are excluded from these rules and regulations.

The mole sieves use an adsorbent to dehydrate the wet gas prior to processing. Once the adsorbent is saturated with water, the mole sieve adsorbent has to be regenerated. The regeneration heaters are used to provide process heat to regenerate the adsorbent, which could be considered as a catalyst bed. Thus, these mole sieve regeneration heaters are excluded from these rules and regulations.

The purpose of the de-ethanization heater is to supply heat for the de-ethanization process which prepares purity ethane to go to market by removing it from the mixed natural gas liquid stream and removing CO2 to meet pipeline specifications. This purpose is achieved using two heated streams as described below.

One portion of the heat from the de-ethanization heater is distributed to the de-ethanization tower. The de-ethanization tower receives Y-grade liquids (this is the natural gas liquid stream from a cryogenic plant that contains liquid ethane and heavier hydrocarbons) that are trickled down through a series of trays within the tower. As heat is introduced to the tower, the ethane will vaporize and rise out the top of the tower while the remaining Y-grade flows through the bottom of the tower and is sent to storage. Heat is introduced to the tower by heating a portion of the Y-Grade stream through a heat exchanger and reinjecting it into the tower.

Another portion of the heat from the de-ethanization heater is distributed to the Amine Still. Once ethane has been recovered from the de-ethanization tower there is a percentage of CO2 that is entrained with the ethane. The CO2 must be removed to meet purity standards for ethane and to prevent freezing in the ethane pipeline. The CO2 is removed in the Amine Contactor by sending a liquid stream of proprietary 'lean' amine solution (referenced as RNH2) down through a rising stream of gaseous ethane. As the amine solution contacts the ethane the amine absorbs and forms a chemical bond with the CO2 to create a 'rich' amine solution, which is described in the following equations:

$$2RNH_2 + CO_2 \leftrightarrow RNH_3^- + RNHCOO^-$$

$$RNH_2 + CO_2 + H_2O \leftrightarrow RNH_3^- + HCO_3^-$$

$$RNH_2 + RNH_3^+ \leftrightarrow RNH_3^+ + CO_3^-$$

This 'rich' amine solution is then routed through the Amine Still where it can be regenerated, meaning the chemical reaction will be reversed thus freeing the CO2 from the chemical bond with the amine solution. The 'rich' amine solution is introduced near the top of the tower and descends through a series of trays. As heat is introduced to the 'rich' amine solution, the chemical bond is reversed and the CO2 rises out the top of the tower. The amine solution is again 'lean' and flows through the bottom of the tower to be recycled and used again in the process. Heat is introduced to the Amine Still by heating a portion of the 'lean' amine

through a heat exchanger and reinjecting it into the tower. The heated amine provides heat for the reaction and participates in the chemical reaction as a catalyst per the the formulas listed above.

Thus, these heaters are heating a heat transfer medium that participates in a chemical reaction in the Amine Still of the De-Ethanization Unit and are not affected units under Subpart Db or Rule 2.

This leaves the hot oil and stabilization heaters for the remainder of this discussion. The hot oil heaters provide process heat by heating a heat transfer fluid that is circulated to the process stream that needs the heat energy or must be maintained to a desired temperature.

After the mole sieve, the cryogenic extraction units use phase separation to extract the natural gas liquids from the wet gas. These hot oil heaters provide process heat to regulate the temperatures in the phase separation process, which is not considered as promoting a chemical reaction. Hot Oil Heater H-771 has a maximum design heat input of 28.8 MMBtu/hr, which greater than 10 MMBtu/hr and less than 100 MMBtu/hr. This heater is subject to 45 CSR 2 and Subpart Dc. Under Subpart Dc, the only requirement for this heater is to track natural gas usage on a monthly basis. Rule 2 established an allowable PM limit and visible emission standard for this unit to achieve. 45 CSR §2-8.4.b. excludes natural gas burning units such as this heater from conducting visible emission testing (Method 9 observations) and continuous monitoring of Rule 2.

Each of the rest of the heaters (H-4712, H-6712, H-8712, H-742, H-2742, & H-3742) has a maximum design heat input of less than 10 MMBtu/hr. Thus, these heaters are only subject to the visible emission standard of Rule 2, which is a 10% opacity limit. These heaters are designed and constructed to burn natural gas and 45 CSR §2-8.4.b. excludes from the visible emission testing and monitoring of Section 8 of Rule 2. These heaters are excluded from Subparts Db and Dc due to having a maximum heat input of less than the trigger threshold of 100 MMBtu/hr for Subpart Db and 10 MMBtu/hr for Subpart Dc.

45 CSR 10 (Rule 10)

This rule establishes allowed sulfur dioxide limits for indirect heat exchangers (boilers), manufacturing process source operations, and combustion of refinery or process gas streams. The facility is basically subject to all three of the allowable standards in this rule. Rule 10 has the same definition of "process heater" as Rule 2, and Subparts Db & Dc. Thus, the heaters that meet the definition of "process heater" are not considered as fuel burning units (boilers) in this rule. However, the heaters are considered part of a manufacturing process (45 CSR §10-2.11.) because they are equipment used in connection with the process. Thus, these heaters are subject to the 2,000 ppm sulfur dioxide allowable in 45 CSR §10-4.1. MarkWest has estimated the SO_2 emissions from these heaters to be 5.34×10^{-4} lb of SO_2 per MMBtu, which equates to 0.37 ppmdv of SO_2 using Method 19 to back calculate the concentration of sulfur dioxide. Thus, the heaters are capable of achieving compliance with this standard without the use of any add-on control device(s).

The heaters that are not "process heater", which are heaters H-771, H-4712, H-6712, H-8712, H-742, H-2742, & H-3742, are considered as fuel burning units and are subject to 45 CSR §10-3.3.f. This provision limits the discharge of sulfur dioxide to 3.2 lb of SO_2 per MMBtu of heat input. 45 CSR §10-10.1. excludes fuel burning units that have a design heat input of less than 10 MMBtu/hr from Section 3 and Sections 6 through 8 of Rule 10. Thus, heaters H-4712, H-6712, H-8712, H-742, H-2742, & H-3742 are excluded from Rule 10. Only Heater H-771 is subject to the standard of 45 CSR §10-3.1. since it has a heat input rating of 28.8 MMBtu/hr. MarkWest has estimated the potential to emit of SO_2 emission at a rate of 5.34×10^{-4} lb SO_2 per MMBtu, which equates to less than two hundredths of one percent of the allowable. Due to the fuel restriction being limited to residual gas (natural gas), no add-on controls will be required for this unit to meet the allowable SO_2 limit of 45 CSR §10-3.1.

The two flares (FL-991 and Dehy Flare) and the reboiler for the dehydration unit are subject to 45 CSR §10-5.1. This provision prohibits the burning of any process gas stream with hydrogen sulfide content greater than 50 grains per 100 cubic feet of carrier gas. FL-991 is primarily only used as a control device for pressure relief devices in VOC service. The Dehy Flare is controlling the still vent from the dehydration unit, which is considered as a waste stream. The reboiler will be consuming gas from the flash tank (flash tank off gas) of dehydration unit, which is considered as process gas stream.

The facility typically receives wet gas with little to no hydrogen sulfide. GLYCalc was run with an input of 4 grains of hydrogen sulfide per 100 cubic feet of gas, which equates to 65 ppmvd of H_2S. GLYCalc predicted the hydrogen sulfide rate from the flash tank to be 179 ppmvd, which equates to 11 grains per 100 cubic feet of gas. During the same simulation run, GLYCalc predicted the H2S concentration at the still vent to be 352 ppmvd, which equates to 24 grains per 100 cubic feet of still vent effluent. Thus, the Dehy Flare and reboiler should meet the standard of 45 CSR §10-5.1. even if the wet gas has a H_2S loading of 4 grains per 100 cubic feet.

Effluent or purge gas going to Flare FL-991 should not contain a H2S loading greater than the incoming wet gas, which is assumed not to be greater than 4 grains per 100 cubic feet of gas. Thus, Flare FL-991 should meet the allowable limitation of 45 CSR §10-5.1. without the use of any add-on control device or further gas processing treatments.

Subpart OOOO to Part 60 (Federal Regulations)

The Sherwood Gas Plant is currently subject to several provisions of Subpart OOOO, which are listed in the following standards established in Subpart OOOO:

- §60.5385 – For Reciprocating Compressors
- §60.5390 – For Pneumatic Controllers
- §60.5400 – For Equipment Leaks at Onshore Natural Gas Processing Plant (LDAR)

- §60.5401 – Exemptions For Equipment Leaks at Onshore Natural Gas Processing Plant (Pressure Relief Devices venting to Control Device)

The proposed changes to the facility would only add additional affect units subject to these provisions §60.5390, §60.5400, and §60.5401. MarkWest plans on only installing instrument air driven pneumatic controllers, which would meet the requirements of the zero bleed rate standard of §60.5390(b)(1).

MarkWest would have to conduct the initial leak detection survey of the new process units within 180 days of initial start-up of the process unit to comply with the Leak Detection And Repair requirements of §60.5400, which is prescribed in Subpart VVa to Part 60.

Most of the pressure relief devices (PRDs) in VOC service at the Sherwood Gas Plant are vented into a closed vent system which routes any releases to Flare FL-991. MarkWest plans on venting any new pressure relief device that is needed on these new process units to Flare FL-991. §60.5400, which references to 40 CFR §60.482-4a(c), allows pressure relief device to be excluded from the LDAR requirements of §60.482-4a and §60.5401(b) if following is satisfied:

- The pressure relief device that routed to a process or fuel gas system or equipped with a closed vent system capable of capturing and transporting leakage through the pressure relief device to a control device.
- The closed vent system shall be constructed of hard-piping.
  - The system shall be free of leaks, which are defined as Method 21 instrument reading of greater than 500 ppm above background.
- The flare must meet the requirements of §60.18.

The proposed flare to replace the existing FL-991 is an air assisted flare with a piggy-back flare that is a non-assisted flare. §60.18 establish criteria for air assisted and non-assisted flares which are used as control devices to meet the requirements of any regulation in 40 CFR 60. The following are the requirements for the proposed flare system:

- §60.18(c)(1) Designed and operated with no visible emissions;
- §60.18(c)(2) Operated with a flame present at all times;
- §60.18(c)(4)(ii) The exit velocity of non-assisted piggy-back flare with gas stream being combusted having a heating value of greater than 1000 Btu per standard cubic foot between 60 feet per second and 400 feet per second.
- §60.18(c)(5) The exit velocity of the air assisted shall not exceed V_{max} as determined in §60.18(f)(6), which is 253.5 feet per second;
- §60.18(c)(3)(ii) & (c)(4)(ii) The effluent going to the flare system shall have a heat content greater than 1,000 Btu per cubic foot.

The proposed flare system to replace Flare FL-991 will meet that above criteria. Thus, the pressure relief devices can be excluded from the LDAR of §60.482-4a and §60.5401(b). To meet the closed vent system requirement of §60.482-10a, MarkWest shall implement the LDAR requirements of §§60.482-10a(f) & (g),which an initial inspection of the closed vent system and annual inspection thereafter.

MarkWest believes there is some PRDs at the facility that vent straight to atmosphere. Subpart OOOO requires monitoring of PRDs in VOC service quarterly and within 5 days of a pressurized release unless the facility is a non-fractionation plant that uses non-plant personnel to conduct leak monitoring. PRDs at non-fractionation facilities after a pressurized release are required to be monitored at the next schedule but not to remain in service for a period of greater than 30 days without being monitored (40 CFR §60.5401(4)). The Sherwood Plant is a non-fractionating plant and currently uses a third party contractor to conduct the leak surveys at the facility. Thus, the exception in §60.5401(4) would be applicable to the PRDs at the Sherwood Plant.

45 CSR 30 – Requirements For Operating Permit

The only additional regulation this proposed modification triggers is that the facility will be classified as a major source under 45 CSR 30 – Operating Permit Program. The installation of the replacement flare (FL-991) and corrected component count of equipment leaks will make the Sherwood Gas Plant major for VOCs. After completion of the entire modification, the facility will be major under Rule 30 for NO_x, and CO as well. The applicant will be required to submit a Title V Permit Application within 12 months after startup of the replacement flare.

TOXICITY OF NON-CRITERIA REGULATED POLLUTANTS

There will be small amounts of various non-criteria regulated pollutants emitted from the combustion of natural gas. However, due to the small concentrations emitted, detailed toxicological information is not included in this evaluation. The modification will only increase the HAP emissions by less than 3 tpy of which 1.36 tons is n-hexane. The facility will still be classified as an area-source of HAPs with a potential to emit of total HAP of less than 19 tons per year.

AIR QUALITY IMPACT ANALYSIS

The writer deemed that an air dispersion modeling study or analysis was not necessary, because the proposed change does not meet the definition of a major source as defined in 45CSR14.

MONITORING OF OPERATIONS

The main source of emissions from the proposed new processing units (Sherwood VII, VIII, and IX) will be equipment leaks. Under Subpart OOOO, MarkWest is required to implement a Leak Detection and Repair as outline in Subpart VVa. 40 CFR §60.482-1a(a) requires MarkWest to demonstrate compliance within 180 days of initial startup of the new processing units, which would be Sherwood VII, VIII, & IX and two stabilization units.

Subpart VVa outlines the follow-up frequency of monitoring for equipment using Method 21. However, MarkWest has elected to use the alternative work practice method as prescribed in 40 CFR §§60.18(g) through (i), which uses optical gas imaging instrument (OGII) in lieu of Method 21. Based on the detection sensitivity of the selected instrument and Table 1 to A of Part 60 – Detection Sensitivity Levels, MarkWest has chosen bi-monthly monitoring frequency of conducting leak survey at the Sherwood Gas Plant. The alternative work practice standard requires that Method 21 would be used in lieu of the OGII once per year for one of the bi-monthly monitoring surveys.

While using this alternative work practice method, the following are not applicable for the equipment being monitoring, which would be allowed under Subpart VVa using Method 21:

- Skip period detection and repair;
- Quality improvement Plans; or
- Complying with standards for allowable percentage of valves and pumps to leaks.

The De-ethanization unit should not be in VOC service because residual gas will contain less than 10% VOCs (40 CFR §60.5400(f)). Methane and ethane are excluded as VOCs in the Clean Air Act. These two compounds accounts for over 90% of residual gas going to the unit. The permit will required MarkWest to maintain documentation indicating that the de-ethanization unit is not in VOC service, which are required by 40 CFR §§60.486a(i) & (j), & §60.5400(f).

The other main focus is monitoring the residual gas (fuel gas) that is combusted in the heaters at the facility and conducting tune-up of the burner for these heaters. MarkWest uses a small percentage of residual gas, which is natural gas going to be introduced into a pipeline system, fuel for the heaters at the facility. This residual gas is not technically pipeline quality because it has not been introduce to a pipeline system. MarkWest currently analyze the residual gas to determinate basis properties and molar content of the components once per month and hydrogen sulfide once per year. Typically the VOC content of the residual gas is less than 1% by weight and incoming gas has a contractual requirement not to exceed 4 grains of H_2S.

The writer recommends using these parameters to establish a fuel quality for the residual gas. Because this residual gas is used in the compressor engines, heaters, and purge gas for FL-991, these residual gas requirements should be in Section 3.0 Facility-Wide Requirement of the permit.

The design heat input of the heater as a result of this modification has increased by 164%. To minimize emissions of CO and NO_x, MarkWest has selected Low-NO_x Burners with flue gas recirculation (FGR) technologies on the heaters that are feasible to do so. The writer recommends requiring tune-up once every 3 years for heaters over 5 MMBtu/hr to optimize NO_x emissions while minimizing the formation of CO based on the manufacturer's guaranteed concentrations.

All of these heaters are gas fired units. So, monitoring visible emissions from these units is not a valuable indicator of compliance with these gas fired units. Second, 45 CSR §2A-3 excludes such units from visible emission monitoring plan requirements. Thus, the writer recommends omitting the visible emission testing requirements and replaces it with tracking fuel usage and heat input of the heaters towards an annual emission for NOx, CO, and VOCs.

Monitoring of the new flare is tracking the amount of effluent sent to the flare, visible emissions and that either the flare or pilot light is lit.

CHANGE TO PERMIT R13-2914B

The changes between the Permit R13-2914B and the proposed draft permit were focused on the following points:

- Organization – Permit R13-2914C was revised to establish sections by equipment rather than by rule.
- Missing control device.

The writer recommends establishing specific sections by emission unit types (engines/compressors, dehydration unit, heaters, tanks & loading operations, LDAR). This approach linked several existing sections into one. Such as the engines/compressors are combined into Section 4.0 which included Sections 5.0, 10,0 and part of 12.0, while omitting Section 11.0 (Rice MACT) totally. The engines are subject to the NSPS Subpart JJJJ and the compressors that are connected to these engines are subject to the rod packing requirement of Subpart OOOO. These engines are subject Subpart JJJJ which satisfies the requirements of the Rice MACT (40 CFR §63.6590(c)). The engines are oxidation catalyst controlled and are tested every 8,760 hours service or once every 3 years. The writer recommends omitting the tracking fuel usage for these engines. Hours of operation, which required by Subpart JJJJ and OOOO, is used to determine when emissions testing is to be conducted and maintained to be performed (rod packing replaced, air/fuel ratio controller).

The dehydration unit is covered under Sections 7.0, 8.0, and parts of 12.0. in Permit R13-2914B. It should be noted that the control device for the actual dehydration unit is not FL-991 and was not included in any of the previous applications filed with the agency. The dehydration unit has its own enclosed combustion device. The VOC and HAP limits in Section 7.0 of Permit R13-2914B were combined with Section 7.0 into Section 5.0. in R13-2914C. Non-applicable portions of were omitted that pertain to design type of the control device (i.e. steam-assisted flare). The applicable provisions of Subpart HH, which covered how to determine the annual average natural gas throughput and determining actual average benzene emissions, were inserted. The flare assessment was replaced with conducting 2 hour visual observation test and 1 hour quarterly check to ensure the control device is operating properly. The reboiler is fueled by the gas from the flash tank, which is subject to 45 CSR §10-5.1., which is included as well. Subpart OOOO requires the LDAR program to include leaks from the dehydration unit and close vent systems to control devices. The requirements from Subpart OOOO will remain in a separate section (Section 8.0) in the modified permit.

The changes to the requirement for the heaters were discussed in the Monitoring Section of this evaluation.

Section 9.0 in Permit R13-2914 covers the storage tanks at the facility. This section only required the vapor recovery unit (VRU) installed and operated with a control efficiency of 98% for VOCs. The potential to emit of VOCs with the VRU is less than 6 tpy for each tank. Subpart OOOO sets requirements for VRUs that are used to control VOC emissions from storage tanks less than the trigger level, which are cover requirements (§60.5411(b)) and closed vent system requirements (§60.5411(c)). These requirements were included in Section 7.0 in the modified permit. The writer recommends establishing a VOC emission limit for the storage tanks and required compliance for the 98% based on operating hours of the VRU compressor divided by the hours the tanks are in service over a 12-month rolling period. Additional requirements for the system is monitoring when the by-pass device for the VRU system is used. These requirements are in Section 7.0 of the draft permit. LDAR program requirements for the closed vent system are in Section 8 in the draft.

The writer established one section in the draft permit (Section 8.0) to cover the gas processing units and LDAR program for the facility. Permit R13-2914B has establish Section 7.0 to cover Flare FL-991and Section 12.0 for the LDAR of Subpart OOOO. Conditions 4.1.5. through 4.1.7. established maximum wet gas throughput, number of components limits for the whole facility and a generalized LDAR requirement. The writer believes these requirements are no longer sufficient. The purpose of the LDAR requirements of Subpart OOOO is to reduce VOC emissions from equipment leaks at natural gas processing plants. These are applicable regardless of the number of components or amount of gas processed. Second, 40 CFR §60.5365(f)(2) defines that all associated equipment with the gas processing at gas processing plants as affect units subject to the LDAR requirements of Subpart OOOO, which includes dehydration units compressor stations and field gas gathering system. Also, Subpart OOOO notes that the equipment in wet gas service or makes contact with a process system that contains 10% or more of VOCs is subject to the LDAR requirements. Thus, the generalized LDAR is

really only covering equipment after the extraction process. The writer recommends having Section 8.0 focus on the applicable LDAR requirements of Subpart OOOO which refers to the LDAR of Subpart VVa. This LDAR program does cover process units PRDs that vent to a control device. Thus, the writer recommends including the closed vent system that the PRDs vent to which is routed to Flare FL-991, which includes Flare FL-991 itself.

RECOMMENDATION TO DIRECTOR

The information provided in the permit application indicates the proposed changes of the facility will meet all the requirements of the application rules and regulations when operated in accordance with the permit application. Therefore, the writer recommends granting MarkWest Liberty Midstream & Resources LLC a Rule 13 a modification permit for the proposal expansion at the Sherwood Gas Extraction Plant located near West Union, WV.

Edward S. Andrews, P.E.
Engineer

October 16, 2015
Date

West Virginia Department of Environmental Protection

Earl Ray Tomblin
Governor

Division of Air Quality

Randy C. Huffman
Cabinet Secretary

Permit to Modify

R13-2914C

This permit is issued in accordance with the West Virginia Air Pollution Control Act (West Virginia Code §§22-5-1 et seq.) and 45 C.S.R. 13 – Permits for Construction, Modification, Relocation and Operation of Stationary Sources of Air Pollutants, Notification Requirements, Temporary Permits, General Permits and Procedures for Evaluation. The permittee identified at the above-referenced facility is authorized to construct the stationary sources of air pollutants identified herein in accordance with all terms and conditions of this permit.

Issued to:

MarkWest Liberty Midstream & Resources LLC
Sherwood Gas Plant
017-00034

William F. Durham
Director

Issued: DRAFT

This permit will supercede and replace Permit R13-2914B.

Facility Location:	218 Swisher Lane West Union, Doddridge County, West Virginia
Mailing Address:	1515 Arapahoe St. Tower 1 Suite 1600 Denver, CO 80202-2137
Facility Description:	Natural Gas Processing Plant
NAICS Codes:	211112
UTM Coordinates:	526.92 km Easting • 4,346.89 km Northing • Zone 17
Permit Type:	Modification
Description of Change:	This action is the installation and operation of three addition extraction units and one de-ethanizer unit. This modification will include the replace of the existing emergency flare.

Any person whose interest may be affected, including, but not necessarily limited to, the applicant and any person who participated in the public comment process, by a permit issued, modified or denied by the Secretary may appeal such action of the Secretary to the Air Quality Board pursuant to article one [§§22B-1-1 et seq.], Chapter 22B of the Code of West Virginia. West Virginia Code §§22-5-14.

As a result of the granting of this permit, the source is subject to 45CSR30. The Title V (45CSR30) application will be due within twelve (12) months after the date of the commencement of the operation or activity (Flare FL-991activities) authorized by this permit, unless granted a deferral or exemption by the Director from such filing deadline pursuant to a request from the permittee.

Table of Contents

1.0. Emission Units 5

1.1. Control Devices 7

2.0. General Conditions 8
2.1. Definitions 8
2.2. Acronyms 8
2.3. Authority 9
2.4. Term and Renewal 9
2.5. Duty to Comply 9
2.6. Duty to Provide Information 9
2.7. Duty to Supplement and Correct Information 9
2.8. Administrative Update 10
2.9. Permit Modification 10
2.10 Major Permit Modification 10
2.11. Inspection and Entry 10
2.12. Emergency 10
2.13. Need to Halt or Reduce Activity Not a Defense 11
2.14. Suspension of Activities 11
2.15. Property Rights 11
2.16. Severability 12
2.17. Transferability 12
2.18. Notification Requirements 12
2.19. Credible Evidence 12

3.0. Facility-Wide Requirements 13
3.1. Limitations and Standards 13
3.2. Monitoring Requirements 14
3.3. Testing Requirements 14
3.4. Recordkeeping Requirements 15
3.5. Reporting Requirements 15

4.0. Specific Requirements for the Compressor Engines 17
4.1. Limitations and Standards 17
4.2. Monitoring Requirements 19
4.3. Testing Requirements 19
4.4. Recordkeeping Requirements 19
4.5. Reporting Requirements 20

5.0. Specific Requirements for Production Gas Dehydration Unit 22
5.1. Limitations and Standards 22
5.2. Monitoring Requirements 23
5.3. Testing Requirements 24
5.4. Recordkeeping Requirements 24

6.0. Specific Requirements Process Heaters 26
6.1. Limitations and Standards 26
6.2. Monitoring Requirements 27
6.3. Testing Requirements 27
6.4. Recordkeeping Requirements 28
6.5. Reporting Requirements 28

7.0. Specific Requirements for the Storage Tanks 29

7.1. Limitations and Standards 29
7.2. Monitoring Requirements 30
7.3. Testing Requirements 30
7.4. Recordkeeping Requirements 30
7.5. Reporting Requirements 30

8.0. Specific Requirements Gas Processing Units & LDAR Program 31
8.1. Limitations and Standards 31
8.2. Monitoring Requirements 34
8.3. Testing Requirements 36
8.4. Recordkeeping Requirements 36
8.5. Reporting Requirements 41

CERTIFICATION OF DATA ACCURACY 42

1.0. Emission Units

Emission Unit ID	Emission Point ID	Emission Unit Description	Year Installed	Design Capacity	Control Device
CM-1001	CM-1001	Caterpillar G3616 LE Compressor Engine C-151 Compressor SN: BLB00753	2012	4,735 hp	Oxidation Catalyst
CM-1002	CM-1002	Caterpillar G3616 LE Compressor Engine C-152 Compressor SN: BLB00752	2012	4,735 hp	Oxidation Catalyst
CM-2001	CM-2001	Caterpillar G3608 LE Compressor Engine Compressor SN:BEN00765	2012	2,370 hp	Oxidation Catalyst
DH-001		TEG Dehydration Unit Still Vent	2012	120 MMscfd	Flare
		Flash Tank			Reboiler fuel/RCRC
RB-001	RB-001	TEG Dehydration Unit Reboiler	2012	2.0 MMBTU/hr	None
FL-991	FL-991	Emergency Flare	2012	68,600 scf/min	NA
TNK-001	TNK-001	5 Storage Tanks (1-500 bbl gunbarrel tank, 4-400 bbl condensate/water tanks)	2012	See Description	VRU
H-742	H-742	Stabilization Heater	2014	2.28 MMBTU/hr	None
H-2724	H-2724	Stabilization Heater	2015	2.28 MMBTU/hr	None
H-3724	H-3724	Stabilization Heater	2015	2.28 MMBTU/hr	None
Pressure Vessels	Pressure Vessels	4 - 70,000 gallon NGL Tanks	2012	4@70,000 gallons	Pressure Vessels
Sherwood 1 Extraction Train					
H-711	H-711	Mole Sieve Regeneration Heater	2012	7.86 MMBTU/hr	None
H-771	H-771	Hot Oil Heater	2012	28.25 MMBTU/hr	None
Sherwood 2 Extraction Train					
H-2711	H-2711	Mole Sieve Regeneration Heater	2013	7.86 MMBTU/hr	None
Sherwood 3 Extraction Train					
H-3711	H-3711	Mole Sieve Regeneration Heater	2013	7.86 MMBTU/hr	None
Sherwood 4 Extraction Train					

Emission Unit ID	Emission Point ID	Emission Unit Description	Year Installed	Design Capacity	Control Device
H-4711	H-4711	Mole Sieve Regeneration Heater	2013	18.0 MMBTU/hr	IFGR w/LowNOx Burner
H-4712	H-4712	Hot Oil Heater	2014	6.60 MMBTU/hr	None
Sherwood 5 Extraction Train					
H-5711	H-5711	Mole Sieve Regeneration Heater	2014	18.00 MMBTU/hr	IFGR w/LowNOx Burner
Sherwood 6 Extraction Train					
H-6711	H-6711	Mole Sieve Regeneration Heater	2015	18.00 MMBTU/hr	IFGR w/LowNOx Burner
H-6712	H-6712	Hot Oil Heater	2015	6.60 MMBTU/hr	None
Sherwood 7 Extraction Train					
H-7711	H-7711	Mole Sieve Regeneration Heater	2015	18.00 MMBTU/hr	IFGR w/LowNOx Burner
Sherwood 8 Extraction Train					
H-8711	H-8711	Mole Sieve Regeneration Heater	2015	18.00 MMBTU/hr	IFGR w/LowNOx Burner
H-8712	H-8712	Hot Oil Heater	2015	6.60 MMBTU/hr	None
Sherwood 9 Extraction Train					
H-9711	H-9711	Mole Sieve Regeneration Heater	2016	18.00 MMBTU/hr	IFGR w/LowNOx Burner
DeEthanizer Unit					
D1-H-782	D1-H-782	DeEthanizer HMO Process Heater Configured with 8 burners w/Maximum Heat Release of 14.9 MMBtu/hr for each burner	2015	119.2* MMBTU/hr	FGR w/Low NOx Burner
D1-H-741	D1-H-741	DeEthanizer Regeneration Heater	2015	12.53	
Tank Farm					
TK-825	TK-825	Floor Drain Storage Tank	2012	4,200 gal	None
TK-826	TK-826	Lube Oil Storage Tank	2012	4,200 gal	None
TK-824	TK-824	Floor Drain Storage Tank	2012	4,200 gal	None
TK-2821	TK-2821	Methanol Storage Tank	2012	3,780 gal	None
TK-2951	TK-2951	Lube Oil Storage Tank	2012	1,000 gal	None

Emission Unit ID	Emission Point ID	Emission Unit Description	Year Installed	Design Capacity	Control Device
TK-2941	TK-2941	Lube Oil Storage Tank	2012	1,000 gal	None
TK-2896	TK-2896	Floor Drain Storage Tank	2012	500 gal	None
TK-2950	TK-2950	Propane Storage Tank	2012	500 gal	None
		Truck Loading Condensate	2015		VRU

* - Normal Maximum Heat Release Rate of the burners
FGR - Flue Gas Recirculation
IFGR - Integrated Flue Gas Recirculation
RCRC – Recycle or recompression

1.1. Control Devices

Emission Point ID	Control Device	Emission Unit	Pollutant	Control Efficiency
CM-1001 CM-1002	Oxidation Catalyst	Caterpillar G3616 LE Compressor Engines	Carbon Monoxide	95 %
			Volatile Organic Compounds	75 %
			Formaldehyde	90 %
CM-2001	Oxidation Catalyst	Caterpillar G3608 Compressor Engine	Carbon Monoxide	95 %
			Volatile Organic Compounds	75 %
			Formaldehyde	90 %
DH-001	Dehy Flare	TEG Dehydration Unit Still Vent	Volatile Organic Compounds	98 %
			Total Hazardous Air Pollutants	98 %
FL-991	Flare	Emergency Use (Unit Blowdown & Maintenance Purposes)	Volatile Organic Compounds	98 %
			Total Hazardous Air Pollutants	98 %
TNK-001	Vapor Recovery Unit	Condensate Storage Tanks	Volatile Organic Compounds	98 %
			Total Hazardous Air Pollutants	98 %

2.0. General Conditions

2.1. Definitions

2.1.1. All references to the "West Virginia Air Pollution Control Act" or the "Air Pollution Control Act" mean those provisions contained in W.Va. Code §§ 22-5-1 to 22-5-18.

2.1.2. The "Clean Air Act" means those provisions contained in 42 U.S.C. §§ 7401 to 7671q, and regulations promulgated thereunder.

2.1.3. "Secretary" means the Secretary of the Department of Environmental Protection or such other person to whom the Secretary has delegated authority or duties pursuant to W.Va. Code §§ 22-1-6 or 22-1-8 (45CSR§30-2.12.). The Director of the Division of Air Quality is the Secretary's designated representative for the purposes of this permit.

2.2. Acronyms

CAAA	Clean Air Act Amendments	**NO_X**	Nitrogen Oxides
CBI	Confidential Business Information	**NSPS**	New Source Performance Standards
CEM	Continuous Emission Monitor	**PM**	Particulate Matter
CES	Certified Emission Statement	**$PM_{2.5}$**	Particulate Matter less than 2.5 µm in diameter
C.F.R. *or* CFR	Code of Federal Regulations	**PM_{10}**	Particulate Matter less than 10µm in diameter
CO	Carbon Monoxide	**Ppb**	Pounds per Batch
C.S.R. *or* CSR	Codes of State Rules	**Pph**	Pounds per Hour
DAQ	Division of Air Quality	**Ppm**	Parts per Million
DEP	Department of Environmental Protection	**Ppm_V or ppmv**	Parts per Million by Volume
dscm	Dry Standard Cubic Meter	**PSD**	Prevention of Significant Deterioration
FOIA	Freedom of Information Act	**Psi**	Pounds per Square Inch
HAP	Hazardous Air Pollutant	**SIC**	Standard Industrial Classification
HON	Hazardous Organic NESHAP	**SIP**	State Implementation Plan
HP	Horsepower	**SO_2**	Sulfur Dioxide
lbs/hr	Pounds per Hour	**TAP**	Toxic Air Pollutant
LDAR	Leak Detection and Repair	**TPY**	Tons per Year
M	Thousand	**TRS**	Total Reduced Sulfur
MACT	Maximum Achievable Control Technology	**TSP**	Total Suspended Particulate
MDHI	Maximum Design Heat Input	**USEPA**	United States Environmental Protection Agency
MM	Million	**UTM**	Universal Transverse Mercator
MMBtu/hr *or* mmbtu/hr	Million British Thermal Units per Hour	**VEE**	Visual Emissions Evaluation
MMCF/hr *or* mmcf/hr	Million Cubic Feet per Hour	**VOC**	Volatile Organic Compounds
NA	Not Applicable	**VOL**	Volatile Organic Liquids
NAAQS	National Ambient Air Quality Standards		
NESHAPS	National Emissions Standards for Hazardous Air Pollutants		

2.3. Authority

This permit is issued in accordance with West Virginia Air Pollution Control Act W.Va. Code §§ 22-5-1. et seq. and the following Legislative Rules promulgated thereunder:

2.3.1. 45CSR13 – *Permits for Construction, Modification, Relocation and Operation of Stationary Sources of Air Pollutants, Notification Requirements, Temporary Permits, General Permits and Procedures for Evaluation*;

2.4. Term and Renewal

2.4.1. This permit supersedes and replaces previously issued Permit R13-2914B. This Permit shall remain valid, continuous and in effect unless it is revised, suspended, revoked or otherwise changed under an applicable provision of 45CSR13 or any other applicable legislative rule;

2.5. Duty to Comply

2.5.1. The permitted facility shall be constructed and operated in accordance with the plans and specifications filed in Permit Application R13-2914, R13-2914A, R13-2914B, R13-2914C and any modifications, administrative updates, or amendments thereto. The Secretary may suspend or revoke a permit if the plans and specifications upon which the approval was based are not adhered to;
[45CSR§§13-5.11 and 10.3.]

2.5.2. The permittee must comply with all conditions of this permit. Any permit noncompliance constitutes a violation of the West Virginia Code and the Clean Air Act and is grounds for enforcement action by the Secretary or USEPA;

2.5.3. Violations of any of the conditions contained in this permit, or incorporated herein by reference, may subject the permittee to civil and/or criminal penalties for each violation and further action or remedies as provided by West Virginia Code 22-5-6 and 22-5-7;

2.5.4. Approval of this permit does not relieve the permittee herein of the responsibility to apply for and obtain all other permits, licenses, and/or approvals from other agencies; i.e., local, state, and federal, which may have jurisdiction over the construction and/or operation of the source(s) and/or facility herein permitted.

2.6. Duty to Provide Information

The permittee shall furnish to the Secretary within a reasonable time any information the Secretary may request in writing to determine whether cause exists for administratively updating, modifying, revoking, or terminating the permit or to determine compliance with the permit. Upon request, the permittee shall also furnish to the Secretary copies of records to be kept by the permittee. For information claimed to be confidential, the permittee shall furnish such records to the Secretary along with a claim of confidentiality in accordance with 45CSR31. If confidential information is to be sent to USEPA, the permittee shall directly provide such information to USEPA along with a claim of confidentiality in accordance with 40 C.F.R. Part 2.

2.7. Duty to Supplement and Correct Information

Upon becoming aware of a failure to submit any relevant facts or a submittal of incorrect information in any permit application, the permittee shall promptly submit to the Secretary such supplemental facts or corrected information.

2.8. Administrative Update

The permittee may request an administrative update to this permit as defined in and according to the procedures specified in 45CSR13.
[45CSR§13-4.]

2.9. Permit Modification

The permittee may request a minor modification to this permit as defined in and according to the procedures specified in 45CSR13.
[45CSR§13-5.4.]

2.10 Major Permit Modification

The permittee may request a major modification as defined in and according to the procedures specified in 45CSR14 or 45CSR19, as appropriate.
[45CSR§13-5.1]

2.11. Inspection and Entry

The permittee shall allow any authorized representative of the Secretary, upon the presentation of credentials and other documents as may be required by law, to perform the following:

a. At all reasonable times (including all times in which the facility is in operation) enter upon the permittee's premises where a source is located or emissions related activity is conducted, or where records must be kept under the conditions of this permit;

b. Have access to and copy, at reasonable times, any records that must be kept under the conditions of this permit;

c. Inspect at reasonable times (including all times in which the facility is in operation) any facilities, equipment (including monitoring and air pollution control equipment), practices, or operations regulated or required under the permit; and

d. Sample or monitor at reasonable times substances or parameters to determine compliance with the permit or applicable requirements or ascertain the amounts and types of air pollutants discharged.

2.12. Emergency

2.12.1. An "emergency" means any situation arising from sudden and reasonable unforeseeable events beyond the control of the source, including acts of God, which situation requires immediate corrective action to restore normal operation, and that causes the source to exceed a technology-based emission limitation under the permit, due to unavoidable increases in emissions attributable to the emergency. An emergency shall not include noncompliance to the extent caused by improperly designed equipment, lack of preventative maintenance, careless or improper operation, or operator error.

2.12.2. Effect of any emergency. An emergency constitutes an affirmative defense to an action brought for noncompliance with such technology-based emission limitations if the conditions of Section 2.12.3 are met.

2.12.3. The affirmative defense of emergency shall be demonstrated through properly signed, contemporaneous operating logs, or other relevant evidence that:

a. An emergency occurred and that the permittee can identify the cause(s) of the emergency;

b. The permitted facility was at the time being properly operated;

c. During the period of the emergency the permittee took all reasonable steps to minimize levels of emissions that exceeded the emission standards, or other requirements in the permit; and

d. The permittee submitted notice of the emergency to the Secretary within one (1) working day of the time when emission limitations were exceeded due to the emergency and made a request for variance, and as applicable rules provide. This notice must contain a detailed description of the emergency, any steps taken to mitigate emissions, and corrective actions taken.

2.12.4. In any enforcement proceeding, the permittee seeking to establish the occurrence of an emergency has the burden of proof.

2.12.5 The provisions of this section are in addition to any emergency or upset provision contained in any applicable requirement.

2.13. Need to Halt or Reduce Activity Not a Defense

It shall not be a defense for a permittee in an enforcement action that it should have been necessary to halt or reduce the permitted activity in order to maintain compliance with the conditions of this permit. However, nothing in this paragraph shall be construed as precluding consideration of a need to halt or reduce activity as a mitigating factor in determining penalties for noncompliance if the health, safety, or environmental impacts of halting or reducing operations would be more serious than the impacts of continued operations.

2.14. Suspension of Activities

In the event the permittee should deem it necessary to suspend, for a period in excess of sixty (60) consecutive calendar days, the operations authorized by this permit, the permittee shall notify the Secretary, in writing, within two (2) calendar weeks of the passing of the sixtieth (60) day of the suspension period.

2.15. Property Rights

This permit does not convey any property rights of any sort or any exclusive privilege.

2.16. Severability

The provisions of this permit are severable and should any provision(s) be declared by a court of competent jurisdiction to be invalid or unenforceable, all other provisions shall remain in full force and effect.

2.17. Transferability

This permit is transferable in accordance with the requirements outlined in Section 10.1 of 45CSR13. **[45CSR§13-10.1.]**

2.18. Notification Requirements

The permittee shall notify the Secretary, in writing, no later than thirty (30) calendar days after the actual startup of the operations authorized under this permit.

2.19. Credible Evidence

Nothing in this permit shall alter or affect the ability of any person to establish compliance with, or a violation of, any applicable requirement through the use of credible evidence to the extent authorized by law. Nothing in this permit shall be construed to waive any defense otherwise available to the permittee including, but not limited to, any challenge to the credible evidence rule in the context of any future proceeding.

3.0. Facility-Wide Requirements

3.1. Limitations and Standards

3.1.1. **Open burning.** The open burning of refuse by any person, firm, corporation, association or public agency is prohibited except as noted in 45CSR§6-3.1.
[45CSR§6-3.1.]

3.1.2. **Open burning exemptions.** The exemptions listed in 45CSR§6-3.1 are subject to the following stipulation: Upon notification by the Secretary, no person shall cause, suffer, allow or permit any form of open burning during existing or predicted periods of atmospheric stagnation. Notification shall be made by such means as the Secretary may deem necessary and feasible.
[45CSR§6-3.2.]

3.1.3. **Asbestos.** The permittee is responsible for thoroughly inspecting the facility, or part of the facility, prior to commencement of demolition or renovation for the presence of asbestos and complying with 40 C.F.R. § 61.145, 40 C.F.R. § 61.148, and 40 C.F.R. § 61.150. The permittee, owner, or operator must notify the Secretary at least ten (10) working days prior to the commencement of any asbestos removal on the forms prescribed by the Secretary if the permittee is subject to the notification requirements of 40 C.F.R. § 61.145(b)(3)(i). The USEPA, the Division of Waste Management, and the Bureau for Public Health - Environmental Health require a copy of this notice to be sent to them.
[40CFR§61.145(b) and 45CSR§34]

3.1.4. **Odor.** No person shall cause, suffer, allow or permit the discharge of air pollutants which cause or contribute to an objectionable odor at any location occupied by the public.
[45CSR§4-3.1] ***[State Enforceable Only]***

3.1.5. **Permanent shutdown.** A source which has not operated at least 500 hours in one 12-month period within the previous five (5) year time period may be considered permanently shutdown, unless such source can provide to the Secretary, with reasonable specificity, information to the contrary. All permits may be modified or revoked and/or reapplication or application for new permits may be required for any source determined to be permanently shutdown.
[45CSR§13-10.5.]

3.1.6. **Standby plan for reducing emissions.** When requested by the Secretary, the permittee shall prepare standby plans for reducing the emissions of air pollutants in accordance with the objectives set forth in Tables I, II, and III of 45CSR11.
[45CSR§11-5.2.]

3.1.7. The fuel gas (residue gas) for the facility shall not exceed the following on a rolling 12-month basis:

a. Total VOCs content of the gas greater than 1% by weight.

b. Hydrogen sulfide or total sulfur compounds greater than 4 grain per 100 cubic feet of gas.

3.2. Monitoring Requirements

3.2.1. The permittee shall analysis the fuel gas for the facility once per month. Such analysis shall determine the net heating value, percentage of VOC in the fuel gas. Such analysis shall be maintained in accordance with Condition 3.4.1.

3.2.2. For the purpose of demonstrating compliance with Conditions 3.1.7., 5.1.2.c., and 5.1.3.h.vi., the permittee shall conduct gas sampling at a point that is representative of the incoming field gas and analyzing the sample to determine the hydrogen sulfide content of the sample. At the minimum, such sampling and analysis shall be conducted once per year and thereafter. Once per year shall mean between 11 months to 13 months from the previous gas sampling. Records of such monitoring shall be maintained in accordance with Condition 3.4.1. of this permit. **[45 CSR §10-8.3.a.]**

3.3. Testing Requirements

3.3.1. **Stack testing.** As per provisions set forth in this permit or as otherwise required by the Secretary, in accordance with the West Virginia Code, underlying regulations, permits and orders, the permittee shall conduct test(s) to determine compliance with the emission limitations set forth in this permit and/or established or set forth in underlying documents. The Secretary, or his duly authorized representative, may at his option witness or conduct such test(s). Should the Secretary exercise his option to conduct such test(s), the operator shall provide all necessary sampling connections and sampling ports to be located in such manner as the Secretary may require, power for test equipment and the required safety equipment, such as scaffolding, railings and ladders, to comply with generally accepted good safety practices. Such tests shall be conducted in accordance with the methods and procedures set forth in this permit or as otherwise approved or specified by the Secretary in accordance with the following:

a. The Secretary may on a source-specific basis approve or specify additional testing or alternative testing to the test methods specified in the permit for demonstrating compliance with 40 C.F.R. Parts 60, 61, and 63 in accordance with the Secretary's delegated authority and any established equivalency determination methods which are applicable. If a testing method is specified or approved which effectively replaces a test method specified in the permit, the permit may be revised in accordance with 45CSR§13-4. or 45CSR§13-5.4 as applicable.

b. The Secretary may on a source-specific basis approve or specify additional testing or alternative testing to the test methods specified in the permit for demonstrating compliance with applicable requirements which do not involve federal delegation. In specifying or approving such alternative testing to the test methods, the Secretary, to the extent possible, shall utilize the same equivalency criteria as would be used in approving such changes under Section 3.3.1.a. of this permit. If a testing method is specified or approved which effectively replaces a test method specified in the permit, the permit may be revised in accordance with 45CSR§13-4. or 45CSR§13-5.4 as applicable.

c. All periodic tests to determine mass emission limits from or air pollutant concentrations in discharge stacks and such other tests as specified in this permit shall be conducted in accordance with an approved test protocol. Unless previously approved, such protocols shall be submitted to the Secretary in writing at least thirty (30) days prior to any testing and shall contain the information set forth by the Secretary. In addition, the permittee shall notify the Secretary at least fifteen (15) days prior to any testing so the Secretary may have the

opportunity to observe such tests. This notification shall include the actual date and time during which the test will be conducted and, if appropriate, verification that the tests will fully conform to a referenced protocol previously approved by the Secretary.

d. The permittee shall submit a report of the results of the stack test within sixty (60) days of completion of the test. The test report shall provide the information necessary to document the objectives of the test and to determine whether proper procedures were used to accomplish these objectives. The report shall include the following: the certification described in paragraph 3.5.1.; a statement of compliance status, also signed by a responsible official; and, a summary of conditions which form the basis for the compliance status evaluation. The summary of conditions shall include the following:

1. The permit or rule evaluated, with the citation number and language;
2. The result of the test for each permit or rule condition; and,
3. A statement of compliance or noncompliance with each permit or rule condition.

[WV Code § 22-5-4(a)(14-15) and 45CSR13]

3.4. Recordkeeping Requirements

3.4.1. **Retention of records.** The permittee shall maintain records of all information (including monitoring data, support information, reports, and notifications) required by this permit recorded in a form suitable and readily available for expeditious inspection and review. Support information includes all calibration and maintenance records and all original strip-chart recordings for continuous monitoring instrumentation. The files shall be maintained for at least five (5) years following the date of each occurrence, measurement, maintenance, corrective action, report, or record. At a minimum, the most recent two (2) years of data shall be maintained on site. The remaining three (3) years of data may be maintained off site, but must remain accessible within a reasonable time. Where appropriate, the permittee may maintain records electronically (on a computer, on computer floppy disks, CDs, DVDs, or magnetic tape disks), on microfilm, or on microfiche.

3.4.2. **Odors.** For the purposes of 45CSR4, the permittee shall maintain a record of all odor complaints received, any investigation performed in response to such a complaint, and any responsive action(s) taken.
[45CSR§4. *State Enforceable Only.*]

3.5. Reporting Requirements

3.5.1. **Responsible official.** Any application form, report, or compliance certification required by this permit to be submitted to the DAQ and/or USEPA shall contain a certification by the responsible official that states that, based on information and belief formed after reasonable inquiry, the statements and information in the document are true, accurate, and complete.

3.5.2. **Confidential information.** A permittee may request confidential treatment for the submission of reporting required by this permit pursuant to the limitations and procedures of W.Va. Code § 22-5-10 and 45CSR31.

3.5.3. **Correspondence.** All notices, requests, demands, submissions and other communications required or permitted to be made to the Secretary of DEP and/or USEPA shall be made in writing and shall be deemed to have been duly given when delivered by hand, or mailed first class with

postage prepaid to the address(es) set forth below or to such other person or address as the Secretary of the Department of Environmental Protection may designate:

If to the DAQ:
Director
WVDEP
Division of Air Quality
601 57th Street
Charleston, WV 25304-2345

If to the US EPA:
Associate Director
Office of Air Enforcement and Compliance Assistance
(3AP20)
U.S. Environmental Protection Agency
Region III
1650 Arch Street
Philadelphia, PA 19103-2029

3.5.4. Operating Fee

3.5.4.1. In accordance with 45CSR30 – Operating Permit Program, the permittee shall submit a certified emissions statement and pay fees on an annual basis in accordance with the submittal requirements of the Division of Air Quality. A receipt for the appropriate fee shall be maintained on the premises for which the receipt has been issued, and shall be made immediately available for inspection by the Secretary or his/her duly authorized representative.

3.5.5. **Emission inventory.** At such time(s) as the Secretary may designate, the permittee herein shall prepare and submit an emission inventory for the previous year, addressing the emissions from the facility and/or process(es) authorized herein, in accordance with the emission inventory submittal requirements of the Division of Air Quality. After the initial submittal, the Secretary may, based upon the type and quantity of the pollutants emitted, establish a frequency other than on an annual basis.

4.0. Specific Requirements for the Compressor Engines

4.1. Limitations and Standards

4.1.1. The following conditions and requirements are specific to the internal combustion engines identified as CM-1001 and CM-1002 and the connected compressors:

a. Emissions from each engine shall not exceed the following:

i. NO_x emissions from the engine shall not exceed 82 ppmvd at 15 percent O_2. The mass rate of NO_x emissions from each engine shall not exceed 5.22 pounds per hour and 22.86 tpy.

ii. CO emissions from engine shall not exceed 270 ppmvd at 15 percent O_2. The mass rate of CO emissions from each engine shall not exceed 1.46 pounds per hour and 6.40 tpy.

iii. VOC emissions from the engine shall not exceed 86 ppmvd at 15 percent O_2. Formaldehyde is excluded from this VOC limit. The mass rate of VOC emissions shall not exceed 1.67 pounds per hour and 7.32 tpy.
[40 CFR §60.4333(e) & Table 1 to Subpart JJJJ of Part 60—NO_X, CO, and VOC Emission Standards for Stationary Non-Emergency SI Engines ≥100 HP (Except Gasoline and Rich Burn LPG), Stationary SI Landfill/Digester Gas Engines, and Stationary Emergency Engines >25 HP]

iv. Formaldehyde emissions from each engine shall not exceed 0.42 pounds per hour and 1.83 tpy.

b. Each engine shall be equipped with an oxidation catalyst air pollution control device.

c. Each engine shall be equipped with an air to fuel controller. The AFR controller must be maintained and operated appropriately in order to ensure proper operation of the engine and control device to minimize emissions at all times.
[40 CFR §60.4243(g)]

d. Each engine shall be equipped with a non-resettable hour meter.

e. Compliance with the mass emission limits in item a of this condition is satisfied by compiling with Condition 4.1.4. and not exceeding the following concentrations during performance testing:

i. NO_x concentration of 57.6 ppmvd at 15% O_2.

ii. CO concentration of 26.0 ppmvd at 15% O_2.

iii. VOC concentration of 18.9 ppmvd at 15% O_2

f. The permittee shall replace the rod packing in each affected compressor once every 26,000 hours of operation.
[40 CFR §60.5385(a)(1)]

4.1.2. The following conditions and requirements are specific to the internal combustion engines identified as CM-2001:

a. Emissions from the engine shall not exceed the following:

i. NO_x emissions from the engine shall not exceed 82 ppmvd at 15 percent O_2. The mass rate of NO_x emissions shall not exceed 2.61 pounds per hour and 11.44 tpy.

ii. CO emissions from engine shall not exceed 270 ppmvd at 15 percent O_2. The mass rate of CO emissions shall not exceed 0.73 pounds per hour and 3.20 tpy

iii. VOC emissions from the engine shall not exceed 86 ppmvd at 15 percent O_2. Formaldehyde is excluded from this VOC limit. . The mass rate of VOC emissions shall not exceed 1.46 pounds per hour and 6.41 tpy.
[40 CFR §60.4333(e) & Table 1 to Subpart JJJJ of Part 60—NO_X, CO, and VOC Emission Standards for Stationary Non-Emergency SI Engines ≥100 HP (Except Gasoline and Rich Burn LPG), Stationary SI Landfill/Digester Gas Engines, and Stationary Emergency Engines >25 HP]

iv. Formaldehyde emissions from each engine shall not exceed 0.16 pounds per hour and 0.69 tpy.

b. Each engine shall be equipped with an oxidation catalyst air pollution control device.

c. Each engine shall be equipped with an air to fuel controller. The AFR controller must be maintained and operated appropriately in order to ensure proper operation of the engine and control device to minimize emissions at all times.
[40CFR§60.4243(g)]

d. Each engine shall be equipped with a non-resettable hour meter.

e. Compliance with the mass emission limits in item a of this condition is satisfied by compiling with Condition 4.1.4. and not exceeding the following concentrations during performance testing:

i. NO_x concentration of 56.5 ppmvd at 15% O_2.

ii. CO concentration of 26.0 ppmvd at 15% O_2.

iii. VOC concentration of 33.0 ppmvd at 15% O_2

f. The permittee shall replace the rod packing in each affected compressor once every 26,000 hours of operation.
[40 CFR §60.5385(a)(1)]

4.1.3. The permittee shall only operate these engines using fuel gas, except during emergency operation at which the permittee may operate them using propane for a maximum of 100 hours per year.
[40CFR§60.4243(e)]

4.1.4. Requirements for Use of Oxidization Catalysts

a. The automatic air/fuel ratio controller or closed-loop automatic feedback controller shall provide a warning or indication to the operator and/or be interlocked with the engine ignition system to cease engine operation in case of a masking, poisoning or overrich air/fuel ratio situation which results in performance degradation or failure of the catalyst element;

d. The permittee shall check the air/fuel ratio every 1,500 service hours and adjust in accordance to the manufacturer's specifications. The permittee shall maintain these records for five (5) years. The permittee shall monitor the temperature to the inlet of the catalyst and in accordance with manufacturer's specifications a high temperature alarm shall shut off the

engine before thermal deactivation of the catalyst occurs. The permittee shall also inspect for thermal deactivation of the catalyst before restarting the engine;

c. No person shall knowingly:

1. Remove or render inoperative any air pollution or auxiliary air pollution control device installed subject to the requirements of this permit;

2. Install any part or component when the principal effect of the part or component is to bypass, defeat or render inoperative any air pollution control device or auxiliary air pollution control device installed subject to the requirements of this permit; or

3. Cause or allow engine exhaust gases to bypass any catalytic reduction device.

4.1.5. **Operation and Maintenance of Air Pollution Control Equipment.** The permittee shall, to the extent practicable, install, maintain, and operate all pollution control equipment listed in Section 1.0 and associated monitoring equipment in a manner consistent with safety and good air pollution control practices for minimizing emissions, or comply with any more stringent limits set forth in this permit or as set forth by any State rule, Federal regulation, or alternative control plan approved by the Secretary.
[45CSR§13-5.11.]

4.2. Monitoring Requirements

4.2.1. The permittee shall maintain a maintenance plan of conducted maintenance and must, to the extent practicable, maintain and operate the engine in a manner consistent with good air pollution control practice for minimizing emissions.
[40 CFR §60.4243(b)(2)(ii)]

4.2.2. The permittee shall monitored and record the hours of operation through the non-resettable hour meter for each engine on a monthly basis and record the number of hours the engine operated using propane. Records of such monitoring shall be maintained in accordance with Condition 3.4.1.
[40CFR§60.4245(b)]

4.3. Testing Requirements

4.3.1. The permittee must conduct performance testing on engines CM-1001, CM-1002, and CM-2001 once every 8,760 hours of operation or once every three years, whichever comes first. Such testing shall be conducted in accordance with the applicable procedures in 40 CFR §60.4244 and Condition 3.3.1. Records of such testing shall be maintained in accordance with Condition 3.4.1.
[40CFR§60.4243(b)]

4.4. Recordkeeping Requirements

4.4.1. **Record of Monitoring.** The permittee shall keep records of monitoring information that include the following:

a. The date, place as defined in this permit, and time of sampling or measurements;

b. The date(s) analyses were performed;

c. The company or entity that performed the analyses;

d. The analytical techniques or methods used;

e. The results of the analyses; and

f. The operating conditions existing at the time of sampling or measurement.

4.4.2. **Record of Maintenance of Air Pollution Control Equipment.** For all pollution control equipment listed in Section 1.0, the permittee shall maintain accurate records of all required pollution control equipment inspection and/or preventative maintenance procedures.

4.4.3. **Record of Malfunctions of Air Pollution Control Equipment.** For all air pollution control equipment listed in Section 1.0, the permittee shall maintain records of the occurrence and duration of any malfunction or operational shutdown of the air pollution control equipment during which excess emissions occur. For each such case, the following information shall be recorded:

a. The equipment involved.

b. Steps taken to minimize emissions during the event.

c. The duration of the event.

d. The estimated increase in emissions during the event.

For each such case associated with an equipment malfunction, the additional information shall also be recorded:

e. The cause of the malfunction.

f. Steps taken to correct the malfunction.

g. Any changes or modifications to equipment or procedures that would help prevent future recurrences of the malfunction.

4.4.4. For each compressor connected to Engines CM-1001 and CM1002, the permittee shall maintain records of the following in accordance with Condition 3.4.1.

i. Record the cumulative number of hours of operation since initial startup or the previous replacement of the reciprocating compressor rod packing, whichever is later

ii. Record of the date of the most recent replacement of the rod packing.
[40 CFR §60.5385(c)(3)]

4.4.5. The permittee shall maintain records of the monitoring as required in Condition 4.1.4. for each engine in accordance with Condition 3.4.1.

4.5. Reporting Requirements

4.5.1. The permittee shall submit annual compliance reports that indicates compliance with Condition 4.1.1.f. and 40 CFR §60.5385(a)(1) from the compressors connected to engines to the Director and Administrator in accordance with Conditions 3.5.1. and 3.5.3. The reporting period of such reports shall begin on October 15 and ends on October 14. Submission of reports must be made within 90 days from the end of the reporting period. The permittee may submit one report for

multiple affected facilities under Subpart OOOO to Part 60. Such reports shall include the following information:

i. The company name and address of the affected facility

ii. An identification of each affected facility being included in the annual report.

iii. Beginning and ending dates of the reporting period.

iv. A certification by a certifying official of truth, accuracy, and completeness. This certification shall state that, based on information and belief formed after reasonable inquiry, the statements and information in the document are true, accurate, and complete.

v. The records as required in Condition 4.4.4. for each affected compressor.

[40 CFR §60.5420(b) and (b)(4)(ii)]

5.0. Specific Requirements for Production Gas Dehydration Unit

5.1. Limitations and Standards

5.1.1. The permittee shall install, operate and maintain the production gas dehydration unit in accordance with the following requirements:

a. For the purposes of limiting emissions of benzene from the still vent of the regenerator to less than 1.0 ton per year, the permittee shall limit throughput of gas through the unit as stated in item b of this condition and route the still vent into a closed vent system to a control device.

b. The maximum amount of wet natural gas processed through the dehydration unit shall not exceed 120 MMscf per day. Compliance with this limit shall be determined using the daily throughput averaged on a monthly basis.

c. The flash tank off gas of the dehydration unit shall either be routed into a closed vent system to the pilot light and burner of the reboiler as fuel gas or recycled for recompression while the dehydration unit is in operation.

d. Vapors from the regenerator still vent shall be vented into a closed vent system which is routed to a control device that is identified as Dehy Flare. Such control vent system shall be maintained in such a manner to be free of leaks. A leaking component is defined as a measured instrument reading greater than 500 ppm above background or by visual inspection. Monitor of the closed vent system shall be conducted in accordance with Condition 8.2.2
[40 CFR §60.5400(a), §60.482-11a(g)]

5.1.2. The permittee shall operate and maintain the reboiler for the dehydration unit in accordance with the following emission limitations and operating parameters.

a. Emissions of VOC from the emission point RB-001shall not exceed 0.66 pounds per hour. Annual VOC emissions shall not exceed 2.89 tons per year on a 12-month rolling total.

b. Total hazardous air pollutants (HAPs), which include BTEX, from emission point RB-001shall not exceed 0.02 pounds per hour. Annual Total HAP emissions from RB-001shall not exceed 0.1 tons per year on a 12-month rolling total.

c. Sulfur dioxide emissions from RB-001 shall not exceed 0.19 pounds per hour. Compliance with this emission limit is satisfied by limiting the hydrogen sulfide (H_2S) loading of the incoming natural gas to the facility to be no greater than 4.0 grains of H2S per 100 cubic feet of natural gas or 65 ppm of H_2S by volume.
[45 CSR §10-5.1.]

d. The permittee shall operate and maintain the reboiler in a manner to minimize emissions. Such operation of the flare shall constitute the following:

i. The pilot light for the reboiler shall be lit at all times when glycol is circulating in the dehydration unit. The fuel source for the pilot light shall be the flash tank off gas of the dehydrator or fuel (residue) gas.

ii. Visible emissions from emission point RB-001shall not exceed 10% opacity on a 6-minute block average. Compliance with this requirement is satisfied by complying with the fuel type restriction in Condition 4.1.3.c.iii.
[45 CSR §2-3.1]

iii. The reboiler shall only be fueled with fuel gas that meets the requirements of Condition 3.1.7., flash tank off gas, or any combination of these two fuels.

5.1.3. The Dehy flare shall be designed and operated in accordance with the following:

a. The flare shall be a non-assisted flare.

b. The flare shall be designed for and operated with no visible emissions, except for periods not to exceed a total of 5 minutes during any 2 consecutive hours.
[45 CSR §6-4.3]

c. The flare shall be operated, with a flame present at all times whenever emissions may be vented to them.

d. The net heating value of the effluent going to the flare shall be 7.45 MJ/scm (300 Btu/scf) or greater.

e. The flare tip exit velocity shall not exceed 60 feet per second.

f. The total emissions from the flare shall not exceed the following limits:

i. Emissions of NO_x shall not exceed 0.44 pounds per hour and 1.96 tpy.

ii. Emissions of CO shall not exceed 3.85 pounds per hour and 16.85 tpy.

iii. Emissions of VOC shall not exceed 2.02 pounds per hour and 8.84 tpy.

iv. Emissions of SO_2 shall not exceed 0.19 pounds per hour. Compliance with this emission limit is satisfied by limiting the hydrogen sulfide (H2S) loading of the incoming natural gas to the dehydration unit to be no greater than 4.0 grains of H2S per 100 cubic feet of natural gas or 65 ppm of H2S by volume.
[45 CSR §10-5.1.]

v. Total HAPs shall not exceed 0.33 pounds per hour and 1.47 tpy.

5.1.4. **Operation and Maintenance of Air Pollution Control Equipment.** The permittee shall, to the extent practicable, install, maintain, and operate all pollution control equipment listed in Section 1.0 and associated monitoring equipment in a manner consistent with safety and good air pollution control practices for minimizing emissions, or comply with any more stringent limits set forth in this permit or as set forth by any State rule, Federal regulation, or alternative control plan approved by the Secretary.
[45CSR§13-5.11.]

5.2. Monitoring Requirements

5.2.1. The permittee shall monitor and record the following parameters for the purpose of demonstrating compliance with Conditions 5.1.1., and 5.1.3.:

a. The throughput of wet natural gas processed through the dehydration unit on a daily basis, days the dehydration unit operated, and annual natural gas flowrate.
[40 CFR §63.774(d)(1)]

b. Determine actual annual average natural gas throughput (in terms of natural gas flowrate to the glycol dehydration unit per day) by converting the annual natural gas flowrate to a daily

average by dividing the annual flowrate by the number of days per year the glycol dehydration unit processed natural gas.
[40 CFR §63.772(b)(1)(i)]

c. Identify any periods there was no flame present for the pilot of the flare when the dehydration unit was in operation.

d. Determination of the actual average benzene emissions from the dehydration unit shall be made using the model GRIGLYCalc™, Version 3.0 or higher, and the procedures presented in the associated GRI-GLYCalc™ Technical Reference Manual. Inputs to the model shall be representative of actual operating conditions of the glycol dehydration unit and may be determined using the procedures documented in the Gas Research Institute (GRI) report entitled "Atmospheric Rich/Lean Method for Determining Glycol Dehydrator Emissions" (GRI-95/0368.1).
[40 CFR §63.772(b)(2)(i) & 63.774(d)(1)(ii)]

e. Records of such monitoring shall be maintained in accordance with Condition 3.4.1.

5.2.2. For the purpose of demonstrating proper operation of the Dehy Flare as stated in Condition 5.1.3.b., the permittee shall conduct a visible emission observation using Section 11 of Method 22 for one hour once every calendar quarter in which the flare was in service. If during the first 30 minutes of the observation there were no visible emissions observed, the permittee may stop the observation.

If at the end of the observation, visible emissions were observed for more than 2 minutes, then the permittee shall follow the manufacturer's repair instructions, if available or best combustion engineering practice as outline in the unit inspection and maintenance plan. To return the flare to compliant operation, the permittee shall repeat the visible emission observation. Records of such monitoring and repair activities shall be maintained in accordance with Condition 3.4.1.

5.3. Testing Requirements

5.3.1. In order to demonstrate compliance with the flare opacity requirements of 5.1.3.b., the permittee shall conduct a Method 22 opacity test for at least two hours within 180 days after issuance of this permit. This test shall demonstrate no visible emissions are observed for more than a total of 5 minutes during any 2 consecutive hour period using 40CFR60 Appendix A Method 22. The permittee shall conduct this test within one (1) year of permit issuance or initial startup whichever is later. The visible emission checks shall determine the presence or absence of visible emissions. At a minimum, the observer must be trained and knowledgeable regarding the effects of background contrast, ambient lighting, observer position relative to lighting, wind, and the presence of uncombined water (condensing water vapor) on the visibility of emissions. This training may be obtained from written materials found in the References 1 and 2 from 40 CFR Part 60, appendix A, Method 22 or from the lecture portion of 40 CFR part 60, appendix A, Method 9 certification course. Such testing shall be conducted in accordance with Condition 3.3.1.

5.4. Recordkeeping Requirements

5.4.1. **Record of Maintenance of Air Pollution Control Equipment.** For all pollution control equipment listed in Section 1.0, the permittee shall maintain accurate records of all required pollution control equipment inspection and/or preventative maintenance procedures.

5.4.2. **Record of Malfunctions of Air Pollution Control Equipment.** For all air pollution control equipment listed in Section 1.0, the permittee shall maintain records of the occurrence and duration of any malfunction or operational shutdown of the air pollution control equipment during which excess emissions occur. For each such case, the following information shall be recorded:

a. The equipment involved.

b. Steps taken to minimize emissions during the event.

c. The duration of the event.

d. The estimated increase in emissions during the event.

For each such case associated with an equipment malfunction, the additional information shall also be recorded:

e. The cause of the malfunction.

f. Steps taken to correct the malfunction.

g. Any changes or modifications to equipment or procedures that would help prevent future recurrences of the malfunction.

5.4.3. The permittee shall maintain records of the analysis that is used to indicate compliance is in accordance with items a. and b. of Conditions 4.1.1. Such records shall include the source of data used in the analysis and be maintained in accordance with Condition 3.4.1. **[40 CFR 63.774(d)(2)(ii)]**

6.0. Specific Requirements Process Heaters

6.1. Limitations and Standards

6.1.1. Maximum Design Heat Input. The maximum design heat input (MDHI) for each of the heaters shall not exceed the following:

Table 6.1.1. – List Heaters

Emission Unit ID#	Heater Description	MDHI (MMBTU/hr)	Annual Heat Input (MMBtu/yr)
H-711	Mole Sieve Regeneration Heater[1]	7.86	68,853.60
H-2711	Mole Sieve Regeneration Heater[1]	7.86	68,853.60
H-3711	Mole Sieve Regeneration Heater[1]	7.86	68,853.60
H-771	Hot Oil Heater	28.25	247,470.00
H-4711	Mole Sieve Regeneration Heater[2]	18.00	157,680.00
H-5711	Mole Sieve Regeneration Heater[2]	18.00	157,680.00
H-6711	Mole Sieve Regeneration Heater[2]	18.00	157,680.00
H-7711	Mole Sieve Regeneration Heater[2]	18.00	157,680.00
H-8711	Mole Sieve Regeneration Heater[2]	18.00	157,680.00
H-9711	Mole Sieve Regeneration Heater[2]	18.00	157,680.00
H-6712	Hot Oil Heater	6.60	57,816.00
H-4712	Hot Oil Heater	6.60	57,816.00
H-8712	Hot Oil Heater	6.60	57,816.00
H-742	Stabilization Heater	2.28	19,972.80
H-2742	Stabilization Heater	2.28	19,972.80
H-3742	Stabilization Heater	2.28	19,972.80
D1-H-782	DeEthanizer HMO Heater[3]	113.36	993,033.60
D1-H-741	DeEthanizer Regen Heater[2]	12.23	107,134.80
Total Maximum Design Heat Input		312.06	2,733,645.60

1 - Denotes the heater is a process heater per 45 CSR §2-26.
2 - Denotes the heater is a process heater per 45 CSR §2-26 and 40 CFR §60.41c.
3 - Denotes the unit is a process heater per 45 CSR §2-26 and 40 CFR §60.41c and 40 CFR §60.41b.

6.1.2. The following heaters shall not exhibit visible emissions greater than 10 percent opacity on a six minute block average: H-742, H-771, H-2742, H-3742, H-4712, H-6712 and H-8712. **[45CSR§2-3.1.]**

6.1.3. The permittee shall not exceed the following limits of annual emissions from combined heaters listed in Table 6.1.1.

a. Emissions of NOx shall not exceed 51.5 tpy.

b. Emissions of CO shall not exceed 62.4 tpy.

c. Emissions of VOCs shall not exceed 23.3 tpy.

Compliance with these emissions limits shall be satisfied by complying with Conditions 6.1.4., 6.1.5., and 6.1.6.

6.1.4. All of the fuel burning units listed in Table 6.1.1. shall be limited to using residue gas that complies with the requirements of Condition 3.1.7. Complying with this condition satisfies

compliance with Condition 6.1.2. the use of residue gas in these emission units satisfies compliance with the limitations of 45CSR§2-3.1., 45CSR§2-4.1.b., and 45CSR§10-3.1.e. **[45CSR§2A-3.1.a., 45CSR§10-10.3., and 45CSR§10A-3.1.b.]**

6.1.5. The permittee shall conduct tune-up of all of the heaters that are listed in Table 6.1.1. that have a MDHI of 5.0 MMBtu/hr or greater once every three years in accordance with the following:

a. As applicable, inspect the burner, and clean or replace any components of the burner as necessary (permittee may delay the burner inspection until the next scheduled unit shutdown). At units where entry into a piece of process equipment or into a storage vessel is required to complete the tune-up inspections, inspections are required only during planned entries into the storage vessel or process equipment;

b. Inspect the flame pattern, as applicable, and adjust the burner as necessary to optimize the flame pattern. The adjustment should be consistent with the manufacturer's specifications, if available;

c. Inspect the system controlling the air-to-fuel ratio, as applicable, and ensure that it is correctly calibrated and functioning properly (you may delay the inspection until the next scheduled unit shutdown);

d. Optimize total emissions of CO to a concentration not to exceed 50 ppm. This optimization should be consistent with the manufacturer's specifications, which includes the manufacturer's NOx concentration specification of not to exceed 30 ppm, expect for Heaters H-6712 H-4712, H-8712, which is not exceed a NO_x concentration of 33 ppm.

e. Measure the concentrations in the effluent stream of NO_x and CO in parts per million, by volume, and oxygen in volume percent, before and after the adjustments are made (measurements may be either on a dry or wet basis, as long as it is the same basis before and after the adjustments are made). Measurements may be taken using a portable CO analyzer.

6.1.6. The annual heat input of each heater listed in Table 6.1.1. shall not exceed the value as listed in the table for the corresponding heater. Compliance with this limit shall be conducted on 12 month rolling total.

6.2. Monitoring Requirements

6.2.1. For each month, the permittee shall record the hours of operation and amount of fuel gas consumed by heaters listed in Table 6.1.1., and shall calculate the rolling yearly total of total heat input from the heaters. The permittee may record the total amount of fuel gas consume by the heaters and other emission units on a combined basis. For other emission units not listed but fuel usage include on the fuel meter, the permittee shall monitor the hour of operation of these sources to account for their fuel usage as well. Such records shall be maintained in accordance with Condition 3.4.1. of this permit.
[40 CFR §60.48c(g)(2) and 45CSR§2A-7.1.a.1.]

6.3. Testing Requirements

[Reserved]

6.4. Recordkeeping Requirements

6.4.1. The permittee shall keep the following records in accordance Condition 3.4.1.. This includes but is not limited to the following information during the tune-up as required in Condition 6.1.5.:

a. The concentrations of CO and NO_x in the effluent stream in parts per million by volume, and oxygen in volume percent, measured at high fire or typical operating load, before and after the tune-up of the boiler or process heater; and

b. A description of any corrective actions taken as a part of the tune-up.

6.5. Reporting Requirements

[Reserved]

7.0. Specific Requirements for the Storage Tanks

7.1. Limitations and Standards

7.1.1. Combined total VOC emissions from the storage tanks (5 Storage Tanks (1-500 bbl gunbarrel tank, 4-400 bbl condensate/water tanks)) shall not exceed 9.6 tpy. Compliance with this limit shall be satisfied by compliance with Condition 7.1.2.

7.1.2. The permittee shall install and operate prior to start-up of the storage tanks a vapor recovery unit (VRU) system while any of the respective vessels (1-500 bbl gunbarrel tank & 4-400 bbl condensate/water tanks)are in service, which include vessels that are empty but not degassed, and recompress the vapors back into a pipeline segment. Such VRU system, which includes the closed vent system and storage vessels, shall meet the following requirements:
[40 CFR §60.5365(e)(3)]

a. The cover and all openings on the cover (e.g., access hatches, sampling ports, pressure relief valves and gauge wells) shall form a continuous impermeable barrier over the entire surface area of the liquid in the storage vessel or wet seal fluid degassing system.
[40 CFR §60.5411(b)(1)]

b. Each cover opening shall be secured in a closed, sealed position (e.g., covered by a gasketed lid or cap) whenever material is in the unit on which the cover is installed except during those times when it is necessary to use an opening as follows:

i. To add material to, or remove material from the unit (this includes openings necessary to equalize or balance the internal pressure of the unit following changes in the level of the material in the unit);

ii. To inspect or sample the material in the unit;

iii. To inspect, maintain, repair, or replace equipment located inside the unit; or

iv. To vent liquids, gases, or fumes from the unit through a closed-vent system designed and operated in accordance with the requirements of 40 CFR §60.5411(a) or (c) to a control device or to a process.
[40 CFR §60.5411(b)(2)]

c. Each storage vessel thief hatch shall be equipped, maintained and operated with a weighted mechanism or equivalent, to ensure that the lid remains properly seated. The permittee must select gasket material for the hatch based on composition of the fluid in the storage vessel and weather conditions.
[40 CFR §60.5411(b)(3)]

d. The closed vent system shall be designed to route all gases, vapors, and fumes emitted from the material in the storage vessels to a control device that meets the requirements specified in §60.5412(c) and (d), or to a process.
[40 CFR §60.5411(c)(1)]

e. The permittee must design and operate a closed vent system with no detectable emissions, as determined using olfactory, visual and auditory inspections. Each closed vent system that routes emissions to a process must be operational 98 percent of the year or greater. Such system shall meet the requirements of Condition 8.1.2.
[40 CFR §§60.5411(c) & (c)(2)]

f. The permittee must meet the requirements specified in 40 CFR §60.5411(c)(3)(i) and (ii) of this section if the closed vent system contains one or more bypass devices that could be used to divert all or a portion of the gases, vapors, or fumes from entering the control device or to a process.
[40 CFR §60.5411(c)(3)]

i. The permittee must properly install, calibrate, maintain, and operate a flow indicator at the inlet to the bypass device that could divert the stream away from the control device or process to the atmosphere that sounds an alarm, or, initiates notification via remote alarm to the nearest field office, when the bypass device is open such that the stream is being, or could be, diverted away from the control device or process to the atmosphere; or
[40 CFR §60.5411(c)(3)(i)(A)]

ii. The permittee must secure the bypass device valve installed at the inlet to the bypass device in the non-diverting position using a car-seal or a lock-and-key type configuration.
[40 CFR §60.5411(c)(3)(i)(B)]

g. Low leg drains, high point bleeds, analyzer vents, open-ended valves or lines, and safety devices are not subject to the requirements of 40 CFR §60.5411(c)(3)(i).
[40 CFR §60.5411(c)(3)(ii)]

7.2. Monitoring Requirements

7.2.1. The permittee shall monitor any by-pass device of the closed vent system by installing a continuous monitoring system that indicates opening a by-pass device and records date and length of time the device was open. Such records shall be maintained in accordance with Condition 3.4.1.

7.2.2. The permittee shall monitor and record monthly and rolling twelve month totals of liquid throughput during truck loading operations and the hours the compressor for the VRU system operated. Compliance with the 98% operational time in Condition 7.1.2.e. is based on the time the VRU compressor operated divided by the number of hours that any of the vessels was in service over a 12-month rolling period. Such records shall be maintained in accordance with Condition 3.4.1.

7.3. Testing Requirements

[Reserved]

7.4. Recordkeeping Requirements

7.4.1. The permittee shall maintain a record of the amount of liquid unloaded from the vessels on a monthly basis. Such records shall be maintained in accordance with Condition 3.4.1.

7.4.2. The vapor recovery system will comply with the recordkeeping requirements of §60.486 and §60.635(b). Such records shall be maintained in accordance with Condition 3.4.1.

7.5. Reporting Requirements

[Reserved]

8.0. Specific Requirements Gas Processing Units & LDAR Program

8.1. Limitations and Standards

8.1.1. All groups of equipment located within Sherwood I though IX Gas Processing Units, TEG Dehydration Unit, wet gas compressors, and any other unit(s) that is in VOC service (i.e. NGL) are subject to the following except for compressors and components only in residue gas service:

a. Each pneumatic controller at the facility must have a bleed rate of zero. Compliance with this requirement shall be satisfied by using only compressed air driven pneumatic controllers at the facility. Each pneumatic controller shall be tagged with the month and year of installation and identification information that allows traceability to the records for that pneumatic controller as required in Condition 8.4.4.
[40 CFR §60.5390(b)(1) & (b)(2)]

b. Each pressure relief device (PRD) in gas/vapor service shall be monitored quarterly and within 30 days after each pressure release to detect leaks by the methods specified in 40 CFR §60.485a(b) unless the PRD meets the criteria of sub item v. of this item.

i. If an instrument reading of 500 ppm or greater is measured, a leak is detected.

ii. When a leak is detected, it must be repaired as soon as practicable, but no later than 15 calendar days after it is detected, except as provided in 40 CFR §60.482-9a.

iii. A first attempt at repair must be made no later than 5 calendar days after each leak is detected.

iv. No pressure relief device shall not be operated for more than 30 days after a pressure release without being monitored for a leak.

v. Each pressure relief device in VOC gas/vapor service located at the facility that is piped into a closed vent system and routed to a control device in accordance with Condition 8.1.2. is exempt from the requirements of this item.
[40 CFR §§60.5401(b)(1) though (b)(4)]

c. All pumps in light liquid service, valves in gas/vapor or light liquid service, and connectors in gas/vapor or light liquid service shall not exhibit leaks as defined in the following.
[40 CFR §60.5400(a), §§60.482-2a, 7a, and 11a]

i. A leak for pumps in light liquid service is defined as a measured instrument reading of 2,000 ppm or greater using Method 21 or any visible emission that may otherwise be invisible to the naked eye using an optical gas imaging instrument (OGII).
[40 CFR §60.482-2a(b)(1) and §60.18(g)(3)]

ii. A leak for valves in gas/vapor or light liquid service is defined as a measured instrument reading of 500 ppm or greater using Method 21 or any visible emission that may otherwise be invisible to the naked eye using an OGII.
[40 CFR §60.482-7a(b) and §60.18(g)(3)]

iii. A leak for connector in gas/vapor or light liquid service is defined as a measured instrument reading of 500 ppm or greater using Method 21 or any visible emission that may otherwise be invisible to the naked eye using an OGII.
[40 CFR §60. 482-11a(b)(2) and §60.18(g)(3)]

d. Sampling connection systems are exempt from the requirements of §60.482-5a. **[40 CFR §60.5402(c)]**

e. Each open-ended valve or line shall be equipped with a cap, blind flange, plug, or a second valve except as noted in Sub-items iii and iv of this item.

i. The cap, blind flange, plug, or second valve shall seal the open end at all times except during operation requiring process fluid flow through the open-ended valve or line.

ii. Each open-ended line equipped with a second valve shall be operated in a manner such that the valve on the process fluid end is closed before the second valve is closed.

iii. When a double block-and-bleed system is being used, the bleed valve or line may remain open during operations that require venting the line between the block valves but shall comply with item e of this condition at all other times.

iv. Open-ended valves or lines in an emergency shutdown system which are designed to open automatically in the event of a process upset are exempt from the requirements of the above sub-items of item e of this condition.
[40 CFR §60.5400(a), §§60.482-6a]

f. Any leaking component must be repaired as soon as practicable, but no later 15 calendar days after it is detected, except as provided in item h of this condition (40 CFR §60.482-9a).

i. A first attempt at repair must be made no later than 5 calendar days after each leak is detected.

g. Delay of repair (DOR) of equipment for which leaks have been detected will be allowed if repair within 15 days is technically infeasible without a process shutdown. Repair of this equipment shall occur before the end of the next process unit shutdown. Monitoring to verify the repair must occur within 15 days after startup of the process unit.
[40 CFR §60.5400(a), §§60.482-9a(a)]

h. Delay of repair (DOR) of equipment will be allowed for equipment which is isolated from the process and which does not remain in VOC service.
[40 CFR §60.5400(a), §§60.482-9a(b)]

i. Delay of repair for valves and connectors will be allowed if:

i. The permittee demonstrates that the emissions of purged material resulting from immediate repair are greater than the fugitive emissions likely to result from the delay of repair; and

ii. When repair procedures are effected, the purged material is collected and destroyed or recovered in a control device complying with the requirements of Condition 8.1.3. (40 CFR §60.482-10a).
[40 CFR §60.5400(a), §§60.482-9a(b)]

j. Delay of repair beyond a process unit shutdown is allowed for a valve, if valve assembly replacement is necessary during the process unit shutdown, valve assembly supplies have been depleted, and valve assembly supplies have been sufficiently stocked before the supplies were depleted. Delay of repair beyond the next process unit shutdown will not be allowed unless the next process unit shutdown occurs sooner than 6 months after the first process unit shutdown.

k. When delay of repair is allowed for a leaking pump, valve, or connector that remains in service, the pump, valve or connector may be considered to be repaired and no longer subject to delay of repair requirements if two consecutive monthly monitoring instrument readings are below the leak definition.

8.1.2. All pressure relief devices in VOC service at the facility shall be vented to a closed vent system and control device (Flare FL-991) in accordance with the following requirements:

a. The closed vent system shall be constructed of hard piping;
[40 CFR §60.5400(a), §60.482-11a(f)(1)]

b. The closed vent system shall be free of leaks. A leaking component is defined as a measured instrument reading greater than 500 ppm above background or by visual inspection.
[40 CFR §60.5400(a), §60.482-11a(g)]

c. Detected leaks shall be repaired as soon as practicable with the first attempt at repair shall be made within 5 calendar days after detecting the leak. Repair shall be completed no later than 15 calendar days after the leak is detected.
[40 CFR §60.5400(a), §§60.482-11a(g)(1) & (g)(2)]

d. Delay of repair (DOR) of the closed vent system for which leaks have been detected is allowed if the repair is technically infeasible without a process shutdown or if the permittee determines that emissions resulting from the immediate repair would be greater than the fugitive emissions likely to result from the DOR. Repair of such equipment shall be complete by the end of the next process shutdown.
[40 CFR §60.5400(a), §60.482-11a(h)]

e. If the permittee determines any parts of the closed vent system as unsafe to monitor by exposing the monitoring personnel to an imminent or potential danger, the permittee shall develop and implement a plan that allows for the monitoring of such components during safe-to-inspect times.

f. Any parts of the closed vent system that are designated, as described in 40 CFR §60.482-10a(l)(2), as difficult to inspect are exempt from the inspection requirements of Condition 8.2.2. if the permittee complies with the requirements specified in the following:

i. The permittee determines that the equipment cannot be inspected without elevating the inspecting personnel more than 2 meters above a support surface;

ii. The process unit within which the closed vent system is located becomes an affected facility through §§60.14 or 60.15, or the permittee designates less than 3.0 percent of the total number of closed vent system equipment as difficult to inspect; and

iii. The permittee shall develop a written plan that requires inspection of difficult to inspect equipment at least once every 5 years.

g. Closed vent systems and control devices used to comply with provisions of Subpart OOOO to Part 60 shall be operated at all times when emissions may be vented to them.
[40 CFR §60.482-10a & §60.54009a)]

8.1.3. Flare FL-991shall be designed and operated in accordance with the following:

a. The main flare shall be an air-assisted flare with a piggy-back to a non-assisted flare.
[40 CFR §60.18(c)(6) & §60.482-10a(d)]

b. Both flares shall be designed for and operated with no visible emissions, except for periods not to exceed a total of 5 minutes during any 2 consecutive hours.
[40 CFR §60.18(c)(1)]

c. Both flares shall be operated with a flame present at all times whenever emissions may be vented to them.
[40 CFR §60.18(c)(2)]

d. The net heating value of the effluent going to the flare shall be 1,000 Btu per scf or greater.
[40 CFR §§60.18(c)(3)(ii) & (c)(4)(ii)]

e. The main flare tip exit velocity shall not exceed 253.5 feet per second.
[40 CFR §60.18(c)(5)]

f. The piggy-back flare tip exit velocity shall not fall below 60 feet per second and not exceed 144 feet per second.
[40 CFR §60.18(c)(4)(ii)]

g. The maximum flow rate to the flare system shall not exceed 1.674 MMscf per hour and 50.82 MMscf per year.

h. The total emissions from the flare shall not exceed following limits:

i. Emissions of NOx shall not exceed 600.45 pounds per hour and 8.01 tpy.

ii. Emissions of CO shall not exceed 1,198.74 pounds per hour and 16.00 tpy.

iii. a. Emissions of VOC shall not exceed 4,000 pounds per hour and 48.00 tpy.

iv. Total HAPs shall not exceed 0.33 pounds per hour and 1.47 tpy.

8.1.4. **Operation and Maintenance of Air Pollution Control Equipment.** The permittee shall, to the extent practicable, install, maintain, and operate all pollution control equipment listed in Section 1.0 and associated monitoring equipment in a manner consistent with safety and good air pollution control practices for minimizing emissions, or comply with any more stringent limits set forth in this permit or as set forth by any State rule, Federal regulation, or alternative control plan approved by the Secretary.
[45CSR§13-5.11.]

8.2. Monitoring Requirements

8.2.1. For the purpose of demonstrating continuous compliance with the emission requirements of Condition 8.1.1.e., the permittee shall conduct leak detection monitoring of all affected components at the facility in accordance with the following:

a. Each pump in light liquid service shall be checked by visual inspection each calendar week for indication of liquids dripping from the pump seal. Designate the visual indications of liquids dripping as a leak, and repair the leak using either the procedures in 40 CFR §60.482-2a(c) or by eliminating the visual indications of liquids dripping.
[40 CFR §60.482-2a(a)(2)]

b. Each pump and valve shall be monitored monthly to detect leaks by the methods specified in 40 CFR §60.485a(b).
[40 CFR §60.482-2a(a)(1) & §60.482-7a(a)(1)]

c. Each connector shall be monitored shall be monitored in accordance with the frequency prescribed in 40 CFR §60.482-11a(b)(3) to detect leaks by the methods specified in 40 CFR §60.485a(b). Connectors on new process units (i.e. Sherwood VII, VIII, & IX) shall be monitoring in accordance with the frequency stipulated in this item 12 months after startup of the affecting process unit.

d. Each connector of a new process unit (i.e. Sherwood VII, VIII, & IX) at the facility shall be monitored within the initial 12 months after start-up of the process unit to detect leaks by methods specified in 40 CFR §60.485a(b).

e. The permittee may use the Alternative Work Practice (AWP) for monitoring equipment for leaks in lieu of the methods specified in 40 CFR §60.485a(b) (Method 21) as outlined in 40 CFR §§60.18(g), (h), and (i) (OGII). If the permittee elects to use the AWP, then the following items are in effect:

i. The frequency of monitoring for all affected components shall be bi-monthly or one of the other monitoring frequencies listed in Table 1 to Subpart A of Part 60.

ii. The detection sensitivity level shall be 60 grams per hour or the corresponding selected monitoring frequency in Table 1 to Subpart A of Part 60.

iii. The selected OGII must provide the operator with an image of the potential leak points for each piece of equipment at both the detection sensitivity level and within the distance used in the daily instrument check described in 40 CFR §60.18(i)(2) of this section. The detection sensitivity level depends upon the frequency at which leak monitoring is to be performed. The OGII must provide a date and time stamp for video records of every monitoring event.

iv. If the AWP is used to identify leaks, re-screening after an attempted repair of leaking equipment must be conducted using either AWP or the 40 CFR part 60, appendix A-7, Method 21 monitor at the leak definition required in the applicable subpart to which the equipment is subject.

v. The AWP shall not be used for equipment being monitored:

1. Skip period leak detection and repair;

2. Quality improvement plans; or

3. Complying with standards for allowable percentage of valves and pumps to leak.

vi. All components shall be monitored annually using 40 CFR Part 60, appendix A-7, Method 21 monitor at the leak definition required in Condition 8.1.1.c. The permittee may choose the specific monitoring period (for example, first quarter) to conduct the annual monitoring. Subsequent monitoring must be conducted every 12 months from the initial period. The permittee must keep records of the annual Method 21 screening results, as specified in 40 CFR §60.18(i)(4)(vii).

f. Records of such monitoring shall be maintained in accordance with Section 8.4.and Condition 3.4.1.

[40 CFR §60.18(a)(2), §§60.18(g) though (i), §60.485a(b), §60.5410(f)]

8.2.2. For the purpose of demonstrating compliance with the requirements of the closed vent system in Conditions 5.1.1.d., 7.1.2.e. and 8.1.2., the permittee shall conduct the following:

a. Conduct an initial inspection according to the procedures in 40 CFR §60.485a(b) (Method 21).

b. Conduct annual visual inspections for visible, audible, or olfactory indicators of leaks. The permittee may use an OGII if the distance to targeted components is within the distance used in the daily instrument check described in 40 CFR §60.18(i)(2) to satisfy the annual visual inspection requirement.

c. Detected leaks shall be repaired in accordance with the timing stated in Condition 8.1.2.

d. Records of such inspections shall be maintained in accordance with Condition 8.4.6.
[40 CFR §60.482-10a(f)1) & §60.5400(a)]

8.2.3. The permittee shall monitor and recorded the volumetric amount of effluent, which includes the purge gas, routed to Flare FL-991. Such records shall be maintained in accordance with Condition 3.4.1.

8.2.4. In order to demonstrate compliance with the requirements of 8.1.4.c, the permittee shall monitor the presence or absence of a flare pilot flame using a thermocouple or any other equivalent device.
[40 CFR §60.18(f)(2)]

8.2.5. For the purpose of demonstrating proper operation of the flare (FL-991), the permittee shall conduct a visible emission observation using Section 11 of Method 22 for one hour once every calendar quarter. If during the first 30 minutes of the observation there were no visible emissions observed, the permittee may stop the observation.

If at the end of the observation, visible emission were observed for more than 2.5 minutes, then the permittee shall follow the manufacturer's repair instruction, if available or best combustion engineering practice as outlined in the unit inspection and maintenance plan. To return the flare to compliant operation, the permittee shall repeat the visible emission observation. Records of such monitoring and repair activities shall be maintained in accordance with Condition 3.4.1.

8.3. Testing Requirements

8.3.1. In order to demonstrate compliance with the flare opacity requirements of 8.1.4.b the permittee shall conduct a Method 22 opacity test for at least two hours. This test shall demonstrate no visible emissions are observed for more than a total of 5 minutes during any 2 consecutive hour period using 40CFR60 Appendix A Method 22. The permittee shall conduct this test within 180 days after initial startup. The visible emission checks shall determine the presence or absence of visible emissions. At a minimum, the observer must be trained and knowledgeable regarding the effects of background contrast, ambient lighting, observer position relative to lighting, wind, and the presence of uncombined water (condensing water vapor) on the visibility of emissions. This training may be obtained from written materials found in the References 1 and 2 from 40 CFR part 60, appendix A, Method 22 or from the lecture portion of 40 CFR part 60, appendix A, Method 9 certification course.
[40 CFR §60.18(f)(1)]

8.4. Recordkeeping Requirements

8.4.1. **Record of Monitoring.** The permittee shall keep records of monitoring information that include the following:

a. The date, place as defined in this permit, and time of sampling or measurements;

b. The date(s) analyses were performed;

c. The company or entity that performed the analyses;

d. The analytical techniques or methods used;

e. The results of the analyses; and

f. The operating conditions existing at the time of sampling or measurement.

8.4.2. **Record of Maintenance of Air Pollution Control Equipment.** For all pollution control equipment listed in Section 1.0, the permittee shall maintain accurate records of all required pollution control equipment inspection and/or preventative maintenance procedures.

8.4.3. **Record of Malfunctions of Air Pollution Control Equipment.** For all air pollution control equipment listed in Section 1.0, the permittee shall maintain records of the occurrence and duration of any malfunction or operational shutdown of the air pollution control equipment during which excess emissions occur. For each such case, the following information shall be recorded:

a. The equipment involved.

b. Steps taken to minimize emissions during the event.

c. The duration of the event.

d. The estimated increase in emissions during the event.

For each such case associated with an equipment malfunction, the additional information shall also be recorded:

e. The cause of the malfunction.

f. Steps taken to correct the malfunction.

g. Any changes or modifications to equipment or procedures that would help prevent future recurrences of the malfunction.

8.4.4. The permittee shall record the information specified in the following for each monitoring event required in Conditions 8.2.1. and 8.2.2.

a. Monitoring instrument identification.

b. Operator identification.

c. Equipment identification.

d. Date of monitoring.

e. Instrument reading.
[40 CFR §60.486a(a)(3) & §60.5421]

8.4.5. The permittee shall record and maintain such records in accordance with Condition 3.4.1 for the following information as for the equipment of the closed vent system in Condition 8.1.2.

a. Identification of all parts of the closed vent system that are designated as unsafe to inspect, an explanation of why the equipment is unsafe to inspect, and the plan for inspecting the equipment.

b. Identification of all parts of the closed vent system that are designated as difficult to inspect, an explanation of why the equipment is difficult to inspect, and the plan for inspecting the equipment.

c. For each inspection during which a leak is detected, a record of the information specified in §60.486a(c).

d. For each inspection conducted in accordance with Condition 8.2.2. during which no leaks are detected, a record that the inspection was performed, the date of the inspection, and a statement that no leaks were detected.

e. For each visual inspection conducted as required in Condition 8.2.2. during which no leaks are detected, a record that the inspection was performed, the date of the inspection, and a statement that no leaks were detected.

f. The following information pertaining to the design requirements for closed vent systems and control devices described in Conditions 8.1.2. and 8.1.3. shall be recorded and kept in a readily accessible location:

i. Detailed schematics, design specifications, and piping and instrumentation diagrams.

ii. The dates and descriptions of any changes in the design specifications.

iii. Periods when the closed vent system and flare required in Conditions 8.1.2. and 8.1.3. are not operated as designed, including periods when a flare pilot light does not have a flame.

iv. Dates of startups and shutdowns of the closed vent systems and control devices.
[40 CFR §60.482-10a(l), §60.486a(d), §60.5400(a), & §60.5421(a)]

8.4.6. The permittee shall record the following for when each leak is detected as specified in Condition 8.1.1.c.

a. A weatherproof and readily visible identification, marked with the equipment identification number, shall be attached to the leaking equipment.

b. The identification on a valve may be removed after it has been monitored for 2 successive months as specified in 40 CFR §60.482-7a(c) and no leak has been detected during those 2 months.

c. The identification on equipment, except on a valve or connector, may be removed after it has been repaired.
[40 CFR §60.486a(b) & §60.5421]

8.4.7. The permittee shall record the following information for when each leak is detected as specified in Condition 8.1.1.c. in a log and shall be kept for 2 years in a readily accessible location:

a. The instrument and operator identification numbers and the equipment identification number, except when indications of liquids dripping from a pump are designated as a leak.

b. The date the leak was detected and the dates of each attempt to repair the leak.

c. Repair methods applied in each attempt to repair the leak.

d. Maximum instrument reading measured by Method 21 of appendix A-7 of this part at the time the leak is successfully repaired or determined to be non-repairable, except when a pump is repaired by eliminating indications of liquids dripping.

e. "Repair delayed" and the reason for the delay if a leak is not repaired within 15 calendar days after discovery of the leak.

f. The signature of the permittee (or designate) whose decision it was that repair could not be effected without a process shutdown.

g. The expected date of successful repair of the leak if a leak is not repaired within 15 days.

h. Dates of process unit shutdowns that occur while the equipment is unrepaired.

i. The date of successful repair of the leak.
[40 CFR §60.486a(c) & §60.5421(a)]

8.4.9. The following information pertaining to all equipment subject to the requirements in Conditions 8.1.1. and 8.1.2. shall be recorded in a log that is kept in a readily accessible location:

a. A list of identification numbers for equipment subject to the requirements of Conditions 8.1.1.c. and 8.1.2. (Subpart VVa Components).

b. A list of identification numbers for equipment that are designated for no detectable emissions under the provisions of §§60.482-2a(e), 60.482-3a(i), and 60.482-7a(f).

c. The designation of equipment as subject to the requirements of §60.482-2a(e), §60.482-3a(i), or §60.482-7a(f) shall be signed by the owner or operator. Alternatively, the owner or operator may establish a mechanism with their permitting authority that satisfies this requirement.

d. The dates of each compliance test as required in §§60.482-2a(e), 60.482-3a(i), 60.482-4a, and 60.482-7a(f).

e. The background level measured during each compliance test.

f. The maximum instrument reading measured at the equipment during each compliance test.

g. A list of identification numbers for equipment in vacuum service.

h. The date and results of the weekly visual inspection for indications of liquids dripping from pumps in light liquid service.

i. Records of the information specified in paragraphs (e)(8)(i) through (vi) of this section for monitoring instrument calibrations conducted according to sections 8.1.2 and 10 of Method 21 of appendix A-7 of this part and §60.485a(b).

j. Date of calibration and initials of operator performing the calibration.

k. Calibration gas cylinder identification, certification date, and certified concentration.

l. Instrument scale(s) used.

m. A description of any corrective action taken if the meter readout could not be adjusted to correspond to the calibration gas value in accordance with section 10.1 of Method 21 of appendix A-7 of this part.

n. Results of each calibration drift assessment required by §60.485a(b)(2) (i.e., instrument reading for calibration at end of monitoring day and the calculated percent difference from the initial calibration value).

o. If the permittee makes their own calibration gas, a description of the procedure used.

p. The connector monitoring schedule for each process unit as specified in §60.482-11a(b)(3)(v).
[40 CFR §60.486a(e) & §60.5421(a)]

8.4.10. The permittee must keep the following records when using the AWP for monitoring equipment leaks in Condition 8.2.1.:

a. Identify equipment at the facility for which the permittee has chosen to use the AWP.

b. The detection sensitivity level selected from Table 1 to subpart A of this part for the optical gas imaging instrument.

c. The analysis to determine the piece of equipment in contact with the lowest mass fraction of chemicals that are detectable, as specified in 40 CFR §60.18(i)(2)(i)(A).

d. The technical basis for the mass fraction of detectable chemicals used in the equation in 40 CFR §60.18(i)(2)(i)(B).

e. The daily instrument check. Record the distance, per 40 CFR §60.18 (i)(2)(iv)(B), and the flow meter reading, per 40 CFR §60.18 (i)(2)(iv)(C), at which the leak was imaged. Keep a video record of the daily instrument check for each configuration of the optical gas imaging instrument used during the leak survey (for example, the daily instrument check must be conducted for each lens used). The video record must include a time and date stamp for each daily instrument check. The video record must be kept for 5 years.

f. A video record must be used to document the leak survey results. The video record must include a time and date stamp for each monitoring event. A video record can be used to meet the recordkeeping requirements of the applicable subparts if each piece of regulated equipment selected for this work practice can be identified in the video record. The video record must be kept for 5 years.

g. The results of the annual Method 21 screening required in Condition 8.1.1.e.vi. Records must be kept for all regulated equipment specified in item a of this condition. Records must identify the equipment screened, the screening value measured by Method 21, the time and date of the screening, and calibration information required in the 40 CFR §60.485a.
[40 CFR §60.18(i)(4)(i) though (i)(4)(vii) & §60.5421(a)]

8.4.11 The permittee shall maintain information and data that the DeEthanizer Unit is not in VOC service in accordance with 40 CFR §60.5400(f). Such information shall be maintained for the life of the process unit and in a location that is readily accessible.
[40 CFR §§60.486a(i) & (j), & §60.5400(f)]

8.5. Reporting Requirements

8.5.1. The permittee shall submit the initial semiannual report to the Director within 6 months after start-up for each new process unit (i.e. Sherwood VII, VIII, and IX) at the facility. Such report shall be in accordance with Condition 3.5.1.and included the following information:

a. Process unit identification.

b. Number of valves subject to the requirements of Condition 8.1.1.c.ii.

c. Number of pumps subject to the requirements of Condition 8.1.1.c.i.

d. Number of connectors subject to the requirements of Condition 8.1.1.c.iii.

[40 CFR §60.5422(a) and §§60.487a(a), (b)(1) though (b)(3) and (b)(5)]

8.5.2. The permittee shall submit semiannual reports on or before September 15 for the reporting period January 1 to June 30 and on or before March 15 for the reporting period July 1 to December 31 to the Director in satisfying the requirements of 40 CFR §60.5422 and §60.487a(c) for the equipment subject to Conditions 8.1.1c. Such report shall be in accordance with Condition 3.5.1.and included the following information summarized from the information required in Condition 8.4.9:

a. Process unit identification.

b. For each month during the reporting period,

i. Number of valves for which leaks were detected as in Condition 8.1.1.c.ii.

ii. Number of valves for which leaks were not repaired as required in Condition 8.1.1.f.

iii. Number of pumps for which leaks were detected as in Condition 8.1.1.c.i.

iv. Number of pumps for which leaks were not repaired as required in Condition 8.1.1.f.

v. Number of connectors for which leaks were detected as in Condition 8.1.1.c.iii.

vi. Number of connectors for which leaks were not repaired as required in Condition 8.1.1.f.

vii. The fact that explains each delay of repair (DOR) and, where appropriate, why a process unit shutdown was technically infeasible.

c. Dates of process unit shutdown which occurred during the reporting period.

d. Revisions to items reported to Condition 8.5.1. (Initial semiannual report) if changes have occurred since the initial report or subsequent revisions to the initial report.

[40 CFR §60.5420(b), §60.5422(a) and §60.487a(c)]

8.5.3. The permittee shall submit records of annual Method 21 screening as required in Condition 8.2.1.e.vi. to the Administrator via email CCC_AWP@EPA.GOV. The permittee shall maintain records of such submittal in accordance with Condition 3.4.1.

[40 CFR §60.18(i)(5)]

8.5.4. The permittee shall notify the Director when electing to change monitoring procedure or frequency of monitoring for affected equipment subject to the monitoring required in Condition 8.2.1. Such notification shall be submitted 60 days prior to implementing the change.

CERTIFICATION OF DATA ACCURACY

I, the undersigned, hereby certify that, based on information and belief formed after reasonable inquiry, all information contained in the attached _____, representing the period beginning _____ and ending _____, and any supporting documents appended hereto, is true, accurate, and complete.

Signature[1] (please use blue ink) _____ Responsible Official or Authorized Representative _____ Date

Name & Title (please print or type) _____ Name _____ Title

Telephone No. _____ Fax No. _____

---

[1] This form shall be signed by a "Responsible Official." "Responsible Official" means one of the following:

a. For a corporation: The president, secretary, treasurer, or vice-president of the corporation in charge of a principal business function, or any other person who performs similar policy or decision-making functions for the corporation, or a duly authorized representative of such person if the representative is responsible for the overall operation of one or more manufacturing, production, or operating facilities applying for or subject to a permit and either:

(i) the facilities employ more than 250 persons or have a gross annual sales or expenditures exceeding $25 million (in second quarter 1980 dollars), or

(ii) the delegation of authority to such representative is approved in advance by the Director;

b. For a partnership or sole proprietorship: a general partner or the proprietor, respectively;

c. For a municipality, State, Federal, or other public entity: either a principal executive officer or ranking elected official. For the purposes of this part, a principal executive officer of a Federal agency includes the chief executive officer having responsibility for the overall operations of a principal geographic unit of the agency (e.g., a Regional Administrator of U.S. EPA); or

d. The designated representative delegated with such authority and approved in advance by the Director.

Andrews, Edward S

From: Adkins, Sandra K
Sent: Friday, October 16, 2015 2:05 PM
To: legals@theet.com
Cc: Andrews, Edward S
Subject: RE: Classified Ad# 54946 Confirmation

Thank you!

From: legals@theet.com [mailto:legals@theet.com]
Sent: Friday, October 16, 2015 2:04 PM
To: Adkins, Sandra K <Sandra.K.Adkins@wv.gov>
Subject: Classified Ad# 54946 Confirmation

ID # 17-34
Reg R13-2914C
Company Mark II West
Facility Sherwood Lay Initials CK
PH

I have this scheduled for the 20th. Loretta

Entire Document
NON-CONFIDENTIAL

The Exponent Telegram

P.O. Box 2000
Clarksburg, WV 26302
Phone: 304-626-1420
Fax: 304-622-3629
Classified@theet.com

Advertising Invoice

DEPT OF ENVIRONMENTAL PROTECT
601 57TH ST SE
CHARLESTON, WV 25304

Acct#:5114
Ad#:54946
Phone#:304-926-0499
Date:10/16/2015

Salesperson: Loretta Greathouse **Classification: 999 Legal Ads** **Ad Size: 1.0 x 9.20**

Advertisement Information:

Description	Start	Stop	Ins.	Cost/Day	Total
Classified Exponent	10/20/2015	10/20/2015	1	65.78	65.78
Affidavit Fee	-	-	-	-	3.00

Payment Information:

Date: **Order#** **Type**

10/16/2015 54946 BILLED ACCOUNT

Total Amount: 68.78

Amount Due: 68.78

Attention: Please return the top portion of this invoice with your payment including account and ad number.

Ad Copy

AIR QUALITY
PERMIT NOTICE
Notice of Intent to Approve

On December 11, 2014, MarkWest Liberty Midstream & Resources LLC applied to the WV Department of Environmental Protection, Division of Air Quality (DAQ) for a permit to modify a gas processing plant facility located 218 Swisher Lane, West Union, Doddridge County, WV at latitude 39.273264 and longitude -80.686379. A preliminary evaluation has determined that all State and Federal air quality requirements will be met by the proposed facility. The DAQ is providing notice to the public of its preliminary determination to issue the permit as R13-2914C.

The following increase in potential emissions will be authorized by this permit action: Particulate Matter less than 10 microns, 9.10 tons per year (TPY); Particulate Matter, 9.10 TPY; Sulfur Dioxide, 0.45 TPY; Oxides of Nitrogen, 40.12 TPY; Carbon Monoxide, 63.38 TPY; Volatile Organic Compounds, 79.90 TPY; Total Hazardous Air Pollutants, 2.89 TPY; Carbon Dioxide Equivalent, 102,214 TPY.

Written comments or requests for a public meeting must be received by the DAQ before 5:00 p.m. on Thursday, November 19, 2015. A public meeting may be held if the Director of the DAQ determines that significant public interest has been expressed, in writing, or when the Director deems it appropriate.

The purpose of the DAQ's permitting process is to make a preliminary determination if the proposed modification will meet all state and federal air quality requirements. The purpose of the public review process is to accept public comments on air quality issues relevant to this determination. Only written comments received at the address noted below within the specified time frame, or comments presented orally at a scheduled public meeting, will be considered prior to final action on the permit. All such comments will become part of the public record.

Edward S. Andrews, P.E.
WV Department of
Environmental Protection
Division of Air Quality
601 57th Street, SE
Charleston, WV 25304
Telephone: 304/926-0499,
ext. 1214
FAX: 304/926-0478

Additional information, including copies of the draft permit, application and all other supporting materials relevant to the permit decision may be obtained by contacting the engineer listed above. The draft permit and engineering evaluation can be downloaded at:

www.dep.wv.gov/daq/Pages/NSRPermitsforReview.aspx

Andrews, Edward S

From: Adkins, Sandra K
Sent: Friday, October 16, 2015 12:00 PM
To: Wheeler, Cathy L
Cc: Andrews, Edward S
Subject: DAQ Public Notice

ID # 17-34
Reg R13-2914C
Company MarkWest
Facility Sherwood Initials SKA

Please see below the Public Notice for Draft Permit R13-2914C for MarkWest Liberty Midstream & Resources LLC 's Sherwood Gas Plant located in Doddridge County.

The notice will be published in *The Herald Record* and *The Exponent/Telegram* on Tuesday, October 20, 2015, and the thirty day public comment period will end on Thursday, November 19, 2015.

AIR QUALITY PERMIT NOTICE

Notice of Intent to Approve

On December 11, 2014, MarkWest Liberty Midstream & Resources LLC applied to the WV Department of Environmental Protection, Division of Air Quality (DAQ) for a permit to modify a gas processing plant facility located 218 Swisher Lane, West Union, Doddridge County, WV at latitude 39.273264 and longitude -80.686379. A preliminary evaluation has determined that all State and Federal air quality requirements will be met by the proposed facility. The DAQ is providing notice to the public of its preliminary determination to issue the permit as R13-2914C.

The following increase in potential emissions will be authorized by this permit action: Particulate Matter less than 10 microns, 9.10 tons per year (TPY); Particulate Matter, 9.10 TPY; Sulfur Dioxide, 0.45 TPY; Oxides of Nitrogen, 40.12 TPY; Carbon Monoxide, 63.38 TPY; Volatile Organic Compounds, 79.90 TPY; Total Hazardous Air Pollutants, 2.89 TPY; Carbon Dioxide Equivalent, 102,214 TPY.

Written comments or requests for a public meeting must be received by the DAQ before 5:00 p.m. on Thursday, November 19, 2015. A public meeting may be held if the Director of the DAQ determines that significant public interest has been expressed, in writing, or when the Director deems it appropriate.

The purpose of the DAQ's permitting process is to make a preliminary determination if the proposed modification will meet all state and federal air quality requirements. The purpose of the public review process is to accept public comments on air quality issues relevant to this determination. Only written comments received at the address noted below within the specified time frame, or comments presented orally at a scheduled public meeting, will be considered prior to final action on the permit. All such comments will become part of the public record.

Edward S. Andrews, P.E.
WV Department of Environmental Protection
Division of Air Quality
601 57th Street, SE
Charleston, WV 25304
Telephone: 304/926-0499, ext. 1214

Entire Document
NON-CONFIDENTIAL

FAX: 304/926-0478

Additional information, including copies of the draft permit, application and all other supporting materials relevant to the permit decision may be obtained by contacting the engineer listed above. The draft permit and engineering evaluation can be downloaded at:

www.dep.wv.gov/daq/Pages/NSRPermitsforReview.aspx

Andrews, Edward S

From: Adkins, Sandra K
Sent: Friday, October 16, 2015 9:27 AM
To: Andrews, Edward S
Subject: FW: Publication of Class I Legal Ad for the WV Division of Air Quality

From: Virginia Nicholson [mailto:theheraldrecord1@gmail.com]
Sent: Friday, October 16, 2015 9:20 AM
To: Adkins, Sandra K <Sandra.K.Adkins@wv.gov>
Subject: Re: Publication of Class I Legal Ad for the WV Division of Air Quality

legal will be published on 10/20. thank you.

On Thu, Oct 15, 2015 at 4:30 PM, Adkins, Sandra K <Sandra.K.Adkins@wv.gov> wrote:

Please publish the information below as a Class I legal advertisement (one time only) in the Tuesday, October 20, 2015, issue of *The Herald Record*. Please let me know that this has been received and will be published as requested. Thank you.

Send the invoice for payment and affidavit of publication to:

Sandra Adkins

WV Department of Environmental Protection

DIVISION OF AIR QUALITY

601- 57th Street

Charleston, WV 25304

ID # 17-34
Reg R13-2714C
Company Mark West
Facility Sherwood Initials EJA

Entire Document
NON-CONFIDENTIAL

AIR QUALITY PERMIT NOTICE

Notice of Intent to Approve

On December 11, 2014, MarkWest Liberty Midstream & Resources LLC applied to the WV Department of Environmental Protection, Division of Air Quality (DAQ) for a permit to modify a gas processing plant facility located 218 Swisher Lane, West Union, Doddridge County, WV at latitude 39.273264 and longitude -80.686379. A preliminary evaluation has determined that all State and Federal air quality requirements will be met by the proposed facility. The DAQ is providing notice to the public of its preliminary determination to issue the permit as R13-2914C.

The following increase in potential emissions will be authorized by this permit action: Particulate Matter less than 10 microns, 9.10 tons per year (TPY); Particulate Matter, 9.10 TPY; Sulfur Dioxide, 0.45 TPY; Oxides of Nitrogen, 40.12 TPY; Carbon Monoxide, 63.38 TPY; Volatile Organic Compounds, 79.90 TPY; Total Hazardous Air Pollutants, 2.89 TPY; Carbon Dioxide Equivalent, 102,214 TPY.

Written comments or requests for a public meeting must be received by the DAQ before 5:00 p.m. on Thursday, November 19, 2015. A public meeting may be held if the Director of the DAQ determines that significant public interest has been expressed, in writing, or when the Director deems it appropriate.

The purpose of the DAQ's permitting process is to make a preliminary determination if the proposed modification will meet all state and federal air quality requirements. The purpose of the public review process is to accept public comments on air quality issues relevant to this determination. Only written comments received at the address noted below within the specified time frame, or comments presented orally at a scheduled public meeting, will be considered prior to final action on the permit. All such comments will become part of the public record.

Edward S. Andrews, P.E.

WV Department of Environmental Protection

Division of Air Quality

601 57th Street, SE

Charleston, WV 25304

Telephone: 304/926-0499, ext. 1214

FAX: 304/926-0478

Additional information, including copies of the draft permit, application and all other supporting materials relevant to the permit decision may be obtained by contacting the engineer listed above. The draft permit and engineering evaluation can be downloaded at:

www.dep.wv.gov/daq/Pages/NSRPermitsforReview.aspx

Andrews, Edward S

From: Adkins, Sandra K
Sent: Friday, October 16, 2015 1:21 PM
To: wentworth.paul@epa.gov; bradley.megan@epa.gov; nathan.wheldon@markwest.com; dmichaud@markwest.com
Cc: Durham, William F; McCumbers, Carrie; McKeone, Beverly D; Hammonds, Stephanie E; Taylor, Danielle R; Rice, Jennifer L; Andrews, Edward S; Jarrett, James F
Subject: WV Draft Permit R13-2914C for MarkWest Liberty Midstream & Resources LLC; Sherwood Gas Plant
Attachments: 2914C.pdf; Eval2914C.pdf; Notice.pdf

Please find attached the Draft Permit R13-2914C, Engineering Evaluation, and Public Notice for MarkWest Liberty Midstream & Resources LLC's Sherwood Gas Plant located in Doddridge County.

The notice will be published in *The Herald Record* and *The Exponent/Telegram* on Tuesday, October 20, 2015, and the thirty day public comment period will end on Thursday, November 19, 2015.

Should you have any questions or comments, please contact the permit writer, Ed Andrews, at 304-926-0499 x 1214.

ID # 17-341
Reg R13-2914C
Company MarkWest
Facility Sherwood Initials SK

Entire Document
NON-CONFIDENTIAL

Sherwood Dehy Flare

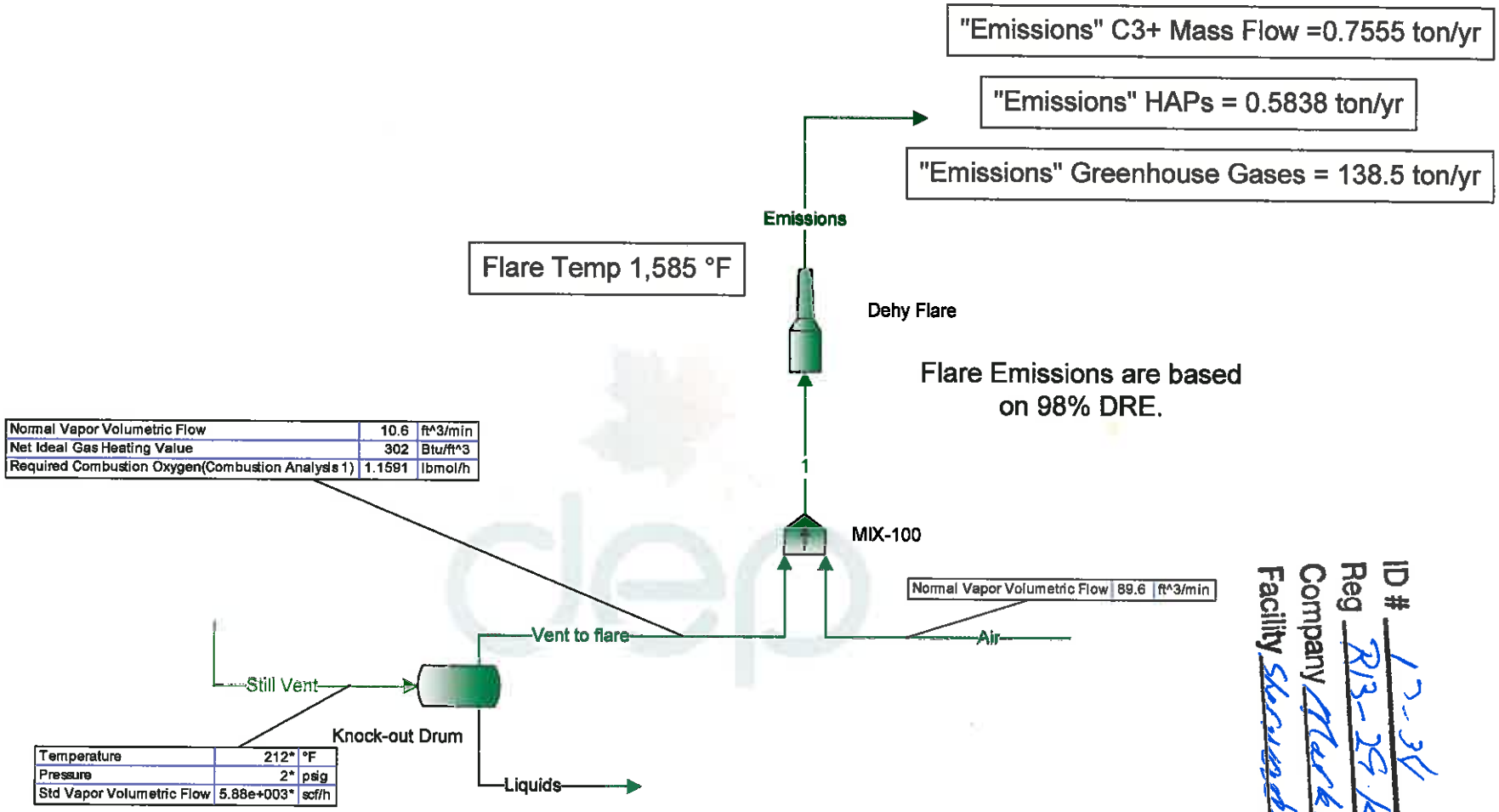

Normal Vapor Volumetric Flow	10.6	ft^3/min
Net Ideal Gas Heating Value	302	Btu/ft^3
Required Combustion Oxygen(Combustion Analysis 1)	1.1591	lbmol/h

Temperature	212*	°F
Pressure	2*	psig
Std Vapor Volumetric Flow	5.88e+003*	scf/h

ID # 13-34
Reg R13-29 KK
Company Marklwood
Facility Sherwood Initials EB

Entire Document
NON-CONFIDENTIAL

Entire Document
NTIAL

Flowsheet1
Plant Schematic

Client Name:	Markwest 017-00034	Job: Separator off of Still Vent on Dehy
Location:	Sherwood Gas Plant	
Flowsheet:	Flowsheet1	

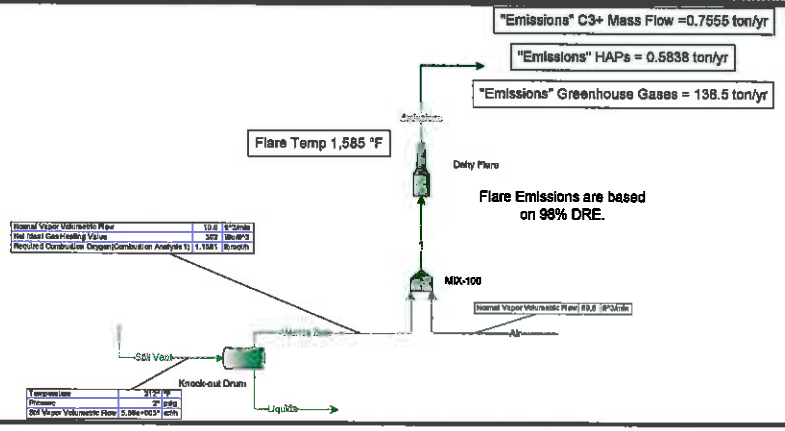

* User Specified Values
? Extrapolated or Approximate Values

ProMax 3.2.13330.0
Copyright © 2002-2012 BRE Group, Ltd.

Licensed to West Virginia Division of Air Quality

Process Streams Report
All Streams
Tabulated by Total Phase

Client Name	Markwest 017-00034	Job	Separator off of Still Vent on Dehy
Location	Sherwood Gas Plant		
Flowsheet	Flowsheet1		

Connections

	Air	Emissions	Liquids	Still Vent	Vent to flare
From Block	–	Dehy Flare	Knock-out Drum	–	Knock-out Drum
To Block	MIX-100	--	–	Knock-out Drum	MIX-100

Stream Composition

Mole Fraction	Air %	Emissions %	Liquids %	Still Vent %	Vent to flare %
Methane	0 *	0.00644731	5.31835E-05	0.353111 *	3.07478
Ethane	0 *	0.00384032	3.05311E-05	0.210328 *	1.83148
Propane	0 *	0.00335288	1.62887E-05	0.183622 *	1.59902
Isobutane	0 *	0.000584759	1.32197E-06	0.0320234 *	0.278877
n-Butane	0 *	0.00219747	1.23299E-05	0.120347 *	1.04799
Isopentane	0 *	0.000508187	1.46203E-06	0.0278303 *	0.242359
n-Pentane	0 *	0.000907096	3.10765E-06	0.0496765 *	0.432602
n-Hexane	0 *	0.000885202	1.44251E-06	0.0484761 *	0.422161
Cyclohexane	0 *	0	0	0 *	0
Heptane	0 *	0.00112273	3.91698E-07	0.0614827 *	0.535442
Benzene	0 *	0.000633912	0.000172556	0.0348666 *	0.302318
Toluene	0 *	0.00134153	0.000301522	0.0737308 *	0.639787
o-Xylene	0 *	0.000475326	0.000110209	0.0261271 *	0.226687
C8	0 *	0.00114204	9.40521E-07	0.0625402 *	0.544647
TEG	0 *	0	0	0 *	0
Water	0 *	14.1592	99.9992	98.6384 *	88.1486
CO2	0 *	4.23207	3.15296E-05	0.0196208 *	0.170631
Nitrogen	79.1 *	69.801	2.37744E-07	0.00279182 *	0.0243118
H2S	0 *	0.014248	8.60923E-05	0.015681 *	0.1359
2-Methylpentane	0 *	0.000718049	1.39836E-06	0.0393226 *	0.342444
Oxygen	20.9 *	11.7694	0	0 *	0

Molar Flow	Air lbmol/h	Emissions lbmol/h	Liquids lbmol/h	Still Vent lbmol/h	Vent to flare lbmol/h
Methane	0 *	0.00109412	7.29439E-06	0.0547134 *	0.0547061
Ethane	0 *	0.000651711	4.1875E-06	0.0325897 *	0.0325855
Propane	0 *	0.00056899	2.23408E-06	0.0284517 *	0.0284495
Isobutane	0 *	9.92348E-05	1.81314E-07	0.00496192 *	0.00496174
n-Butane	0 *	0.000372915	1.69111E-06	0.0186475 *	0.0186458
Isopentane	0 *	8.62403E-05	2.00525E-07	0.00431222 *	0.00431202
n-Pentane	0 *	0.000153936	4.2623E-07	0.00769723 *	0.0076968
n-Hexane	0 *	0.000150221	1.97847E-07	0.00751123 *	0.00751103
Cyclohexane	0 *	0	0	0 *	0
Heptane	0 *	0.00019053	5.37234E-08	0.00952656 *	0.00952651
Benzene	0 *	0.000107576	2.36669E-05	0.00540248 *	0.00537881
Toluene	0 *	0.00022766	4.13553E-05	0.0114244 *	0.011383
o-Xylene	0 *	8.06639E-05	1.51157E-05	0.00404831 *	0.00403319
C8	0 *	0.000193806	1.28997E-07	0.00969042 *	0.00969029
TEG	0 *	0	0	0 *	0
Water	0 *	2.40284	13.7154	15.2837 *	1.56833
CO2	0 *	0.718191	4.32444E-06	0.00304018 *	0.00303585
Nitrogen	11.8449 *	11.8454	3.26078E-08	0.000432584 *	0.000432552
H2S	0 *	0.00241792	1.1808E-05	0.00242973 *	0.00241792
2-Methylpentane	0 *	0.000121854	1.91792E-07	0.00609292 *	0.00609272
Oxygen	3.1297 *	1.99729	0	0 *	0

Mass Fraction	Air %	Emissions %	Liquids %	Still Vent %	Vent to flare %
Methane	0 *	0.00372721	4.73583E-05	0.306839 *	2.25242
Ethane	0 *	0.00416122	5.09577E-05	0.342567 *	2.51471
Propane	0 *	0.00532778	3.98685E-05	0.43858 *	3.21968
Isobutane	0 *	0.00122476	4.26491E-06	0.100818 *	0.740149

ProMax 3.2.13330.0
Copyright © 2002-2012 BRE Group, Ltd.
Licensed to West Virginia Division of Air Quality

Process Streams Report
All Streams
Tabulated by Total Phase

Client Name	Markwest 017-00034	Job	Separator off of Still Vent on Dehy
Location	Sherwood Gas Plant		
Flowsheet	Flowsheet1		

Mass Fraction	Air %	Emissions %	Liquids %	Still Vent %	Vent to flare %
n-Butane	0 *	0.00460255	3.97785E-05	0.378884 *	2.78141
Isopentane	0 *	0.00132125	5.85508E-06	0.108761 *	0.798459
n-Pentane	0 *	0.00235839	1.24454E-05	0.194137 *	1.42522
n-Hexane	0 *	0.0027489	6.9E-06	0.226276 *	1.66121
Cyclohexane	0 *	0	0	0 *	0
Heptane	0 *	0.00405402	2.17859E-06	0.333701 *	2.44993
Benzene	0 *	0.00178435	0.000748159	0.147521 *	1.07832
Toluene	0 *	0.00445425	0.00154208	0.367975 *	2.69179
o-Xylene	0 *	0.00181847	0.000649449	0.150245 *	1.09894
C8	0 *	0.00470097	5.96336E-06	0.386956 *	2.84089
TEG	0 *	0	0	0 *	0
Water	0 *	9.19205	99.9966	96.2532 *	72.5138
CO2	0 *	6.7117	7.70216E-05	0.0467725 *	0.342902
Nitrogen	76.816 *	70.463	3.69677E-07	0.00423625 *	0.031099
H2S	0 *	0.0174984	0.000162863	0.0289477 *	0.211493
2-Methylpentane	0 *	0.00222983	6.68883E-06	0.183549 *	1.34753
Oxygen	23.184 *	13.5713	0	0 *	0

Mass Flow	Air lb/h	Emissions lb/h	Liquids lb/h	Still Vent lb/h	Vent to flare lb/h
Methane	0 *	0.0175524	0.00011702	0.877738 *	0.877621
Ethane	0 *	0.0195963	0.000125914	0.979942 *	0.979816
Propane	0 *	0.02509	9.85131E-05	1.2546 *	1.2545
Isobutane	0 *	0.00576775	1.05384E-05	0.288398 *	0.288387
n-Butane	0 *	0.0216747	9.82909E-05	1.08383 *	1.08373
Isopentane	0 *	0.00622214	1.44676E-05	0.311121 *	0.311107
n-Pentane	0 *	0.0111063	3.0752E-05	0.555346 *	0.555315
n-Hexane	0 *	0.0129453	1.70496E-05	0.647283 *	0.647266
Cyclohexane	0 *	0	0	0 *	0
Heptane	0 *	0.0190915	5.38319E-06	0.95458 *	0.954575
Benzene	0 *	0.00840297	0.00184867	0.421997 *	0.420149
Toluene	0 *	0.0209763	0.00381042	1.05262 *	1.04881
o-Xylene	0 *	0.00856368	0.00160476	0.429789 *	0.428184
C8	0 *	0.0221382	1.47352E-05	1.10692 *	1.10691
TEG	0 *	0	0	0 *	0
Water	0 *	43.2878	247.087	275.341 *	28.2539
CO2	0 *	31.6072	0.000190317	0.133797 *	0.133606
Nitrogen	331.817 *	331.829	9.13455E-07	0.0121182 *	0.0121172
H2S	0 *	0.0824049	0.000402427	0.0828073 *	0.0824049
2-Methylpentane	0 *	0.0105009	1.65278E-05	0.525059 *	0.525043
Oxygen	100.147 *	63.9109	0	0 *	0

Volumetric Flow	Air ft^3/h	Emissions ft^3/h	Liquids gpm	Still Vent ft^3/h	Vent to flare ft^3/h
Methane	0	1.63334	6.49666E-07	23.7533	25.1501
Ethane	0	0.972954	4.6704E-07	14.0978	14.9296
Propane	0	0.849582	3.09339E-07	12.2917	13.0179
Isobutane	0	0.148195	3.0113E-08	2.13931	2.26594
n-Butane	0	0.556887	2.76826E-07	8.02651	8.50231
Isopentane	0	0.128812	3.78111E-08	1.85382	1.96385
n-Pentane	0	0.229927	8.04625E-08	3.30509	3.50145
n-Hexane	0	0.224417	4.22881E-08	3.21539	3.40696
Cyclohexane	0	0	0	0	0
Heptane	0	0.284681	1.28954E-08	4.06478	4.30767
Benzene	0	0.16064	3.70413E-06	2.28957	2.42727
Toluene	0	0.340008	7.54684E-06	4.82456	5.11571
o-Xylene	0	0.120488	3.0993E-06	1.7047	1.80776
C8	0	0.289641	3.41461E-08	4.11883	4.36581
TEG	0	0	0	0	0
Water	0	3586.08	0.514101	656.463	710.726

* User Specified Values
? Extrapolated or Approximate Values

ProMax 3.2.13330.0
Copyright © 2002-2012 BRE Group, Ltd.

Licensed to West Virginia Division of Air Quality

Process Streams Report
All Streams
Tabulated by Total Phase

Client Name	Markwest 017-00034	Job	Separator off of Still Vent on Dehy
Location	Sherwood Gas Plant		
Flowsheet	Flowsheet1		

Volumetric Flow	Air ft^3/h	Emissions ft^3/h	Liquids gpm	Still Vent ft^3/h	Vent to flare ft^3/h
CO2	0	1072.06	3.33853E-07	1.31113	1.38871
Nitrogen	4622.59	17682.7	2.81378E-09	0.188071	0.199115
H2S	0	3.60927	9.34922E-07	1.04045	1.10253
2-Methylpentane	0	0.182035	4.10844E-08	2.6114	2.76682
Oxygen	1220.84	2981.73	0	0	0

Stream Properties

Property	Units	Air	Emissions	Liquids	Still Vent	Vent to flare
Temperature	°F	75 *	1584.64	209.072	212 *	209.072
Pressure	psia	14.7 *	14.7	15.6959	16.6959 *	15.6959
Mole Fraction Vapor	%	100	100	0	11.204	100
Mole Fraction Light Liquid	%	0	0	100	88.796	0
Mole Fraction Heavy Liquid	%	0	0	0	0	0
Molecular Weight	lb/lbmol	28.8463	27.7502	18.0157	18.4617	21.8996
Mass Density	lb/ft^3	0.0739229	0.0185899	59.9214	0.38279	0.048285
Molar Flow	lbmol/h	14.9746 *	16.9702	13.7155	15.4947	1.77919
Mass Flow	lb/h	431.964	470.927	247.095	286.059	38.9634
Vapor Volumetric Flow	ft^3/h	5843.43	25332.4	4.12366	747.299	806.946
Liquid Volumetric Flow	gpm	728.532	3158.32	0.514118	93.1698	100.606
Std Vapor Volumetric Flow	MMSCFD	0.136383	0.154558	0.124916	0.14112 *	0.0162042
Std Liquid Volumetric Flow	sgpm	0.997347	1.09878	0.493965	0.588561	0.0945958
Compressibility		0.999722	1.00022	0.00065756	0.111713	0.991945
Specific Gravity		0.995986	0.95814	0.960756		0.756132
API Gravity				10.0115		
Enthalpy	Btu/h	-249.569	-170050	-1.65338E+06	-1.82318E+06	-169801
Mass Enthalpy	Btu/lb	-0.577754	-361.097	-6691.28	-6373.46	-4357.95
Mass Cp	Btu/(lb*°F)	0.242021	0.310442	0.980604	0.911692	0.458503
Ideal Gas CpCv Ratio		1.39851	1.2996	1.31949	1.30917	1.24848
Dynamic Viscosity	cP	0.0181704	0.0450099	0.284563		0.0126119
Kinematic Viscosity	cSt	15.3449	151.15	0.296467		16.306
Thermal Conductivity	Btu/(h*ft*°F)	0.0148578	0.0448464	0.390323 ?		0.0152364
Surface Tension	lbf/ft			0.00401015 ?		
Net Ideal Gas Heating Value	Btu/ft^3	0	0.715823	0.0271866	34.7367	302.308
Net Liquid Heating Value	Btu/lb	0	-92.747	-1059.16	-311.598	4429.22
Gross Ideal Gas Heating Value	Btu/ft^3	0	7.89694	50.3382	87.1347	370.794
Gross Liquid Heating Value	Btu/lb	0	5.45486	0.595807	765.454	5615.98

Remarks

* User Specified Values
? Extrapolated or Approximate Values

ProMax 3.2.13330.0
Copyright © 2002-2012 BRE Group, Ltd.

Licensed to West Virginia Division of Air Quality

Process Streams Report
All Streams
Tabulated by Total Phase

Client Name	Markwest 017-00034	Job Separator off of Still Vent on Dehy
Location	Sherwood Gas Plant	
Flowsheet	Flowsheet1	

Connections

	1
From Block	MIX-100
To Block	Dehy Flare

Stream Composition

Mole Fraction	1 %
Methane	0.326529
Ethane	0.194496
Propane	0.169809
Isobutane	0.0296156
n-Butane	0.111293
Isopentane	0.0257375
n-Pentane	0.0459406
n-Hexane	0.0448317
Cyclohexane	0
Heptane	0.0568617
Benzene	0.032105
Toluene	0.0679428
o-Xylene	0.0240733
C8	0.0578393
TEG	0
Water	9.36101
CO2	0.0181204
Nitrogen	70.7025
H2S	0.014432
2-Methylpentane	0.0363662
Oxygen	18.6805

Molar Flow	1 lbmol/h
Methane	0.0547061
Ethane	0.0325855
Propane	0.0284495
Isobutane	0.00496174
n-Butane	0.0186458
Isopentane	0.00431202
n-Pentane	0.0076968
n-Hexane	0.00751103
Cyclohexane	0
Heptane	0.00952651
Benzene	0.00537881
Toluene	0.011383
o-Xylene	0.00403319
C8	0.00969029
TEG	0
Water	1.56833
CO2	0.00303585
Nitrogen	11.8454
H2S	0.00241792
2-Methylpentane	0.00609272
Oxygen	3.1297

Mass Fraction	1 %
Methane	0.18636
Ethane	0.208061
Propane	0.266389
Isobutane	0.0612382
n-Butane	0.230127

Copyright © 2002-2012 BRE Group, Ltd.
Licensed to West Virginia Division of Air Quality

Process Streams Report
All Streams
Tabulated by Total Phase

Client Name	Markwest 017-00034	Job	Separator off of Still Vent on Dehy
Location	Sherwood Gas Plant		
Flowsheet	Flowsheet1		

Mass Fraction	1 %
Isopentane	0.0660626
n-Pentane	0.11792
n-Hexane	0.137445
Cyclohexane	0
Heptane	0.202701
Benzene	0.0892173
Toluene	0.222712
o-Xylene	0.0909236
C8	0.235049
TEG	0
Water	5.99963
CO2	0.0283709
Nitrogen	70.463
H2S	0.0174984
2-Methylpentane	0.111491
Oxygen	21.2658

Mass Flow	1 lb/h
Methane	0.877621
Ethane	0.979816
Propane	1.2545
Isobutane	0.288387
n-Butane	1.08373
Isopentane	0.311107
n-Pentane	0.555315
n-Hexane	0.647266
Cyclohexane	0
Heptane	0.954575
Benzene	0.420149
Toluene	1.04881
o-Xylene	0.428184
C8	1.10691
TEG	0
Water	28.2539
CO2	0.133606
Nitrogen	331.829
H2S	0.0824049
2-Methylpentane	0.525043
Oxygen	100.147

Volumetric Flow	1 ft^3/h
Methane	22.7412
Ethane	13.5142
Propane	11.7834
Isobutane	2.0528
n-Butane	7.71182
Isopentane	1.78138
n-Pentane	3.17834
n-Hexane	3.09892
Cyclohexane	0
Heptane	3.92117
Benzene	2.21822
Toluene	4.69065
o-Xylene	1.65355
C8	3.98981
TEG	0
Water	604.806
CO2	1.25929

ProMax 3.2.13330.0
Copyright © 2002-2012 BRE Group, Ltd.

Licensed to West Virginia Division of Air Quality

Process Streams Report
All Streams
Tabulated by Total Phase

Client Name	Markwest 017-00034	Job	Separator off of Still Vent on Dehy
Location	Sherwood Gas Plant		
Flowsheet	Flowsheet1		

Volumetric Flow		1 ft^3/h				
Nitrogen		4929.38				
H2S		1.00249				
2-Methylpentane		2.51328				
Oxygen		1301.14				

Stream Properties

Property	Units	1				
Temperature	°F	110.272				
Pressure	psia	14.7				
Mole Fraction Vapor	%	99.3584				
Mole Fraction Light Liquid	%	0.641562				
Mole Fraction Heavy Liquid	%	0				
Molecular Weight	lb/lbmol	28.1086				
Mass Density	lb/ft^3	0.0680291				
Molar Flow	lbmol/h	16.7538				
Mass Flow	lb/h	470.927				
Vapor Volumetric Flow	ft^3/h	6922.44				
Liquid Volumetric Flow	gpm	863.057				
Std Vapor Volumetric Flow	MMSCFD	0.152588				
Std Liquid Volumetric Flow	sgpm	1.09194				
Compressibility		0.993041				
Specific Gravity						
API Gravity						
Enthalpy	Btu/h	-170050				
Mass Enthalpy	Btu/lb	-361.097				
Mass Cp	Btu/(lb*°F)	0.260677				
Ideal Gas CpCv Ratio		1.37699				
Dynamic Viscosity	cP					
Kinematic Viscosity	cSt					
Thermal Conductivity	Btu/(h*ft*°F)					
Surface Tension	lbf/ft					
Net Ideal Gas Heating Value	Btu/ft^3	32.1038				
Net Liquid Heating Value	Btu/lb	366.463				
Gross Ideal Gas Heating Value	Btu/ft^3	39.3768				
Gross Liquid Heating Value	Btu/lb	464.653				

Remarks

ProMax 3.2.13330.0
Copyright © 2002-2012 BRE Group, Ltd.

Licensed to West Virginia Division of Air Quality

Blocks
Dehy Flare
Reactor Report

Client Name	Markwest 017-00034	Job	Separator off of Still Vent on Dehy
Location	Sherwood Gas Plant	Modified	8 04 AM, 9/10/2015
Flowsheet	Flowsheet1	Status	Solved 8 04 AM, 9/10/2015

Connections

Stream	Connection Type	Other Block	Stream	Connection Type	Other Block
1	Inlet	MIX-100	Emissions	Outlet	

Block Parameters

* Type	Gibbs Minimization		Mole Fraction Light Liquid	0	%
* Gibbs Set	Burner		Mole Fraction Heavy Liquid	0	%
* Pressure Drop	0	psi	* Bypass Fraction	2	%
Pressure Drop Method	User Input		Maximum Phases	1	
Heat Duty	0	Btu/h	Heat Release Curve Increments	10	
Maximum Temperature	1584.64	°F	Reactor Increment Type	by Bypass	
Temperature Change	1474.37	°F	Maximum Available Constraints	16	
Mole Fraction Vapor	100	%	Yield Component		

Energy Specifications

Minimum End Approach Temperature	°F	Highest Supply Temperature	°F
Minimum Effective Approach Temperature	°F	Lowest Supply Temperature	°F
Log Mean Temperature Difference	°F	Highest Demand Temperature	°F
Effective Mean Temperature Difference	°F	Lowest Demand Temperature	°F
End Point UA	Btu/(h*°F)	Total Energy Supply	Btu/h
Effective UA	Btu/(h*°F)	Total Energy Demand	Btu/h

Tabulated Block Data

Index	Conversion %	Yield	Gibbs Reactive	
Methane	98		True	
Ethane	98		True	
Propane	98		True	
Isobutane	98		True	
n-Butane	98		True	
Isopentane	98		True	
n-Pentane	98		True	
n-Hexane	98		True	
Cyclohexane			True	
Heptane	98		True	
Benzene	98		True	
Toluene	98		True	
o-Xylene	98		True	
C8	98		True	
TEG			True	
Water	-53.2103		True	
CO2	-23557		True	
Nitrogen	0		True	
H2S	0		True	
2-Methylpentane	98		True	
Oxygen	36.1827		True	

Remarks

ProMax 3.2.13330.0
Copyright © 2002-2012 BRE Group, Ltd.

Licensed to West Virginia Division of Air Quality

Blocks
Knock-out Drum
Separator Report

Client Name	Markwest 017-00034	Job	Separator off of Still Vent on Dehy
Location	Sherwood Gas Plant	Modified	10:56 AM, 7/9/2015
Flowsheet	Flowsheet1	Status	Solved 10:57 AM, 7/9/2015

Connections

Stream	Connection Type	Other Block	Stream	Connection Type	Other Block
Still Vent	Inlet		Vent to flare	Vapor Outlet	MIX-100
Liquids	Light Liquid Outlet				

Block Parameters

* Pressure Drop	1	psi	Main Liquid Phase	Light Liquid	
Mole Fraction Vapor	11.4826	%	Heat Duty	0	Btu/h
Mole Fraction Light Liquid	88.5174	%	Heat Release Curve Type	Plug Flow	
Mole Fraction Heavy Liquid	0	%	Heat Release Curve Increments	5	

Remarks

ProMax 3.2.13330.0
Copyright © 2002-2012 BRE Group, Ltd.

Licensed to West Virginia Division of Air Quality

Blocks
MIX-100
Mixer/Splitter Report

Client Name	Markwest 017-00034	Job	Separator off of Still Vent on Dehy
Location	Sherwood Gas Plant	Modified	10:02 AM, 9/9/2015
Flowsheet	Flowsheet1	Status	Solved 10:02 AM, 9/9/2015

Connections

Stream	Connection Type	Other Block	Stream	Connection Type	Other Block
Air	Inlet		Vent to flare	Inlet	Knock-out Drum
1	Outlet	Dehy Flare			

Block Parameters

Pressure Drop	0 psi	Fraction to PStream 1	100 %

Remarks

ProMax 3.2.13330.0
Copyright © 2002-2012 BRE Group, Ltd.

Licensed to West Virginia Division of Air Quality

Flowsheet Environment
Markwest Inlet Dehy

Client Name	Markwest 017-00034	Job Separator off of Still Vent on Dehy
Location	Sherwood Gas Plant	
Flowsheet	Flowsheet1	

Environment Settings

Number of Poynting Intervals	0	Freeze Out Temperature Threshold Difference	10 °F
Gibbs Excess Model Evaluation Temperature	77 °F	Phase Tolerance	1 %

Components

Component Name	Henry`s Law Component	Phase Initiator	Component Name	Henry`s Law Component	Phase Initiator
Methane	False	False	Toluene	False	False
Ethane	False	False	o-Xylene	False	False
Propane	False	False	C8	False	False
Isobutane	False	False	TEG	False	True
n-Butane	False	False	Water	False	True
Isopentane	False	False	CO2	False	False
n-Pentane	False	False	Nitrogen	False	False
n-Hexane	False	False	H2S	False	False
Cyclohexane	False	False	2-Methylpentane	False	False
Heptane	False	False	Oxygen	False	False
Benzene	False	False			

Physical Property Method Sets

Liquid Molar Volume	COSTALD	Overall Package	SRK
Stability Calculation	SRK	Vapor Package	SRK
Light Liquid Package	SRK	Heavy Liquid Package	SRK

Remarks

ProMax 3.2.13330.0
Copyright © 2002-2012 BRE Group, Ltd.

Licensed to West Virginia Division of Air Quality

Environments Report

Client Name	Markwest 017-00034	Job	Separator off of Still Vent on Dehy
Location	Sherwood Gas Plant		

Project-Wide Constants

Atmospheric Pressure	14.6959 psia	IG Ref Pressure	14.6959 psia
IG Ref Temperature	60 °F	IG Ref Volume	379.485 ft^3/lbmol
Liq Ref Temperature	60 °F		

Environment [Markwest Inlet Dehy]

Environment Settings

Number of Poynting Intervals	0	Freeze Out Temperature Threshold Difference	10 °F
Gibbs Excess Model Evaluation Temperature	77 °F	Phase Tolerance	1 %

Components

Component Name	Henry`s Law Component	Phase Initiator	Component Name	Henry`s Law Component	Phase Initiator
Methane	False	False	Toluene	False	False
Ethane	False	False	o-Xylene	False	False
Propane	False	False	C8	False	False
Isobutane	False	False	TEG	False	True
n-Butane	False	False	Water	False	True
Isopentane	False	False	CO2	False	False
n-Pentane	False	False	Nitrogen	False	False
n-Hexane	False	False	H2S	False	False
Cyclohexane	False	False	2-Methylpentane	False	False
Heptane	False	False	Oxygen	False	False
Benzene	False	False			

Physical Property Method Sets

Liquid Molar Volume	COSTALD	Overall Package	SRK
Stability Calculation	SRK	Vapor Package	SRK
Light Liquid Package	SRK	Heavy Liquid Package	SRK

Remarks

ProMax 3.2.13330.0
Copyright © 2002-2012 BRE Group, Ltd.

Licensed to West Virginia Division of Air Quality

Calculator Report

Client Name	Markwest 017-00034	Job Separator off of Still Vent on Dehy
Location	Sherwood Gas Plant	

Simple Specifier 1

Source Code

CV1 = ReqO2*2.70/xO2

Calculated Variable [CV1]

SourceMoniker	ProMax:ProMax!Project!Flowsheets!Flowsheet1!PStreams!Air!Phases!Total!Properties!Molar Flow
Value	14.9746
Unit	lbmol/h

Measured Variable [ReqO2]

SourceMoniker	ProMax:ProMax!Project!Flowsheets!Flowsheet1!PStreams!Vent to flare!Analyses!Combustion Analysis 1!Properties!Required Combustion Oxygen
Value	1.15915
Unit	lbmol/h

Measured Variable [xO2]

SourceMoniker	ProMax:ProMax!Project!Flowsheets!Flowsheet1!PStreams!Air!Phases!Total!Composition!Mole Fraction!Oxygen
Value	0.209
Unit	

Remarks

ProMax 3.2.13330.0
Copyright © 2002-2012 BRE Group, Ltd.

Licensed to West Virginia Division of Air Quality

User Value Sets Report

Client Name	Markwest 017-00034	Job	Separator off of Still Vent on Dehy
Location	Sherwood Gas Plant		

Sum Component Flow/Frac

User Value [CompSum]

* Parameter	0.583824	ton/yr	Upper Bound		ton/yr
Lower Bound		ton/yr	* Enforce Bounds	False	

Remarks
This User Value Set was programmatically generated. GUID={7F26E795-BC75-4A5D-936E-B540D78E9FA6}

Sum Component Flow/Frac.23

User Value [CompSum]

* Parameter	138.516	ton/yr	Upper Bound		ton/yr
Lower Bound		ton/yr	* Enforce Bounds	False	

Remarks
This User Value Set was programmatically generated. GUID={767BF2A1-8FA8-4F9B-A002-2E6AF547D392}

Cn+ Flow/Frac.

User Value [CnPlusSum]

* Parameter	0.75546	ton/yr	Upper Bound		ton/yr
Lower Bound		ton/yr	* Enforce Bounds	False	

Remarks
This User Value Set was programmatically generated. GUID={20DE535F-F1A6-406D-B508-8DC987788803}

ProMax 3.2.13330.0
Copyright © 2002-2012 BRE Group, Ltd.

Licensed to West Virginia Division of Air Quality

Recoveries Report

Client Name	Markwest 017-00034	Job Separator off of Still Vent on Dehy
Location	Sherwood Gas Plant	

Component Recoveries - Project Inlets

Status Solved

Recovery Stream Data Source - All Inlets in Project

Flowsheet	PStream	Flowsheet	PStream
Flowsheet1	Air	Flowsheet1	Still Vent

Parameters

* Composition Basis	Molar Flow	* Atomic Basis	False
* Calculate Ratios	False	* Summation Only	False

Tabulated Data

Index	Flowsheet1:Air lbmol/h	Flowsheet1:Still Vent lbmol/h	Summary Table lbmol/h	
Methane	0	0.0547134	0.0547134	
Ethane	0	0.0325897	0.0325897	
Propane	0	0.0284517	0.0284517	
Isobutane	0	0.00496192	0.00496192	
n-Butane	0	0.0186475	0.0186475	
Isopentane	0	0.00431222	0.00431222	
n-Pentane	0	0.00769723	0.00769723	
n-Hexane	0	0.00751123	0.00751123	
Cyclohexane	0	0	0	
Heptane	0	0.00952656	0.00952656	
Benzene	0	0.00540248	0.00540248	
Toluene	0	0.0114244	0.0114244	
o-Xylene	0	0.00404831	0.00404831	
C8	0	0.00969042	0.00969042	
TEG	0	0	0	
Water	0	15.2837	15.2837	
CO2	0	0.00304018	0.00304018	
Nitrogen	11.8449	0.000432584	11.8454	
H2S	0	0.00242973	0.00242973	
2-Methylpentane	0	0.00609292	0.00609292	
Oxygen	3.1297	0	3.1297	

Remarks

Component Recoveries - Project Outlets

Status Solved

Recovery Stream Data Source - All Outlets in Project

Flowsheet	PStream	Flowsheet	PStream
Flowsheet1	Emissions	Flowsheet1	Liquids

Parameters

* Composition Basis	Molar Flow	* Atomic Basis	False
* Calculate Ratios	False	* Summation Only	False

Tabulated Data

Index	Flowsheet1:Emissions lbmol/h	Flowsheet1:Liquids lbmol/h	Summary Table lbmol/h	
Methane	0.00109412	7.29439E-06	0.00110142	
Ethane	0.000651711	4.1875E-06	0.000655898	
Propane	0.00056899	2.23408E-06	0.000571224	
Isobutane	9.92348E-05	1.81314E-07	9.94162E-05	
n-Butane	0.000372915	1.69111E-06	0.000374606	
Isopentane	8.62403E-05	2.00525E-07	8.64409E-05	
n-Pentane	0.000153936	4.2623E-07	0.000154362	
n-Hexane	0.000150221	1.97847E-07	0.000150418	

ProMax 3.2.13330.0
Copyright © 2002-2012 BRE Group, Ltd.
Licensed to West Virginia Division of Air Quality

Recoveries Report

Client Name	Markwest 017-00034	Job	Separator off of Still Vent on Dehy
Location	Sherwood Gas Plant		

Tabulated Data

Index	Flowsheet1:Emissions lbmol/h	Flowsheet1:Liquids lbmol/h	Summary Table lbmol/h	
Cyclohexane	0	0	0	
Heptane	0.00019053	5.37234E-08	0.000190584	
Benzene	0.000107576	2.36669E-05	0.000131243	
Toluene	0.00022766	4.13553E-05	0.000269016	
o-Xylene	8.06639E-05	1.51157E-05	9.57796E-05	
C8	0.000193806	1.28997E-07	0.000193935	
TEG	0	0	0	
Water	2.40284	13.7154	16.1182	
CO2	0.718191	4.32444E-06	0.718195	
Nitrogen	11.8454	3.26078E-08	11.8454	
H2S	0.00241792	1.1808E-05	0.00242973	
2-Methylpentane	0.000121854	1.91792E-07	0.000122046	
Oxygen	1.99729	0	1.99729	

Remarks

Component Recoveries - Project Losses

Status Solved

Reference Stream Data Source - All Outlets in Project

Flowsheet	PStream	Flowsheet	PStream
Flowsheet1	Emissions	Flowsheet1	Liquids

Recovery Stream Data Source - All Inlets in Project

Flowsheet	PStream	Flowsheet	PStream
Flowsheet1	Air	Flowsheet1	Still Vent

Parameters

* Composition Basis	Molar Flow	* Atomic Basis	False
* Calculate Ratios	False	* Summation Only	True

Tabulated Data

Index	Summary Table lbmol/h			
Methane	0.053612			
Ethane	0.0319338			
Propane	0.0278805			
Isobutane	0.00486251			
n-Butane	0.0182728			
Isopentane	0.00422578			
n-Pentane	0.00754287			
n-Hexane	0.00736081			
Cyclohexane	0			
Heptane	0.00933598			
Benzene	0.00527123			
Toluene	0.0111554			
o-Xylene	0.00395253			
C8	0.00949648			
TEG	0			
Water	-0.834512			
CO2	-0.715155			
Nitrogen	-1.21316E-11			
H2S	-6.76821E-11			
2-Methylpentane	0.00597087			
Oxygen	1.13241			

ProMax 3.2.13330.0
Copyright © 2002-2012 BRE Group, Ltd.
Licensed to West Virginia Division of Air Quality

Recoveries Report

Client Name	Markwest 017-00034	Job Separator off of Still Vent on Dehy
Location	Sherwood Gas Plant	

Remarks

Component Recoveries - Project Recoveries

Status Solved

Reference Stream Data Source - All Inlets in Project

Flowsheet	PStream	Flowsheet	PStream
Flowsheet1	Air	Flowsheet1	Still Vent

Recovery Stream Data Source - All Outlets in Project

Flowsheet	PStream	Flowsheet	PStream
Flowsheet1	Emissions	Flowsheet1	Liquids

Parameters

* Composition Basis	Molar Flow	* Atomic Basis	False
* Calculate Ratios	True	* Summation Only	False

Tabulated Data

Index	Flowsheet1:Emissions %	Flowsheet1:Liquids %	Summary Table %	
Methane	1.99973	0.013332	2.01307	
Ethane	1.99974	0.0128491	2.01259	
Propane	1.99984	0.00785217	2.0077	
Isobutane	1.99993	0.00365412	2.00358	
n-Butane	1.99982	0.00906884	2.00889	
Isopentane	1.99991	0.00465016	2.00456	
n-Pentane	1.99989	0.00553745	2.00543	
n-Hexane	1.99995	0.00263402	2.00258	
Cyclohexane	0	0	0	
Heptane	1.99999	0.000563933	2.00055	
Benzene	1.99124	0.438075	2.42931	
Toluene	1.99276	0.361992	2.35475	
o-Xylene	1.99253	0.373383	2.36592	
C8	1.99997	0.00133118	2.0013	
TEG	0	0	0	
Water	15.7216	89.7386	105.46	
CO2	23623.3	0.142243	23623.5	
Nitrogen	100	2.75279E-07	100	
H2S	99.514	0.485981	100	
2-Methylpentane	1.99994	0.00314779	2.00308	
Oxygen	63.8173	0	63.8173	

Remarks

Component Recoveries - Flowsheet1 Inlets

Status Solved

Recovery Stream Data Source - All Inlets in Flowsheet

Flowsheet	PStream	Flowsheet	PStream
Flowsheet1	Air	Flowsheet1	Still Vent

Parameters

* Composition Basis	Molar Flow	* Atomic Basis	False
* Calculate Ratios	False	* Summation Only	False

ProMax 3.2.13330.0
Copyright © 2002-2012 BRE Group, Ltd.
Licensed to West Virginia Division of Air Quality

Recoveries Report

Client Name	Markwest 017-00034	Job Separator off of Still Vent on Dehy
Location	Sherwood Gas Plant	

Tabulated Data

Index	Flowsheet1 Air lbmol/h	Flowsheet1:Still Vent lbmol/h	Summary Table lbmol/h	
Methane	0	0.0547134	0.0547134	
Ethane	0	0.0325897	0.0325897	
Propane	0	0.0284517	0.0284517	
Isobutane	0	0.00496192	0.00496192	
n-Butane	0	0.0186475	0.0186475	
Isopentane	0	0.00431222	0.00431222	
n-Pentane	0	0.00769723	0.00769723	
n-Hexane	0	0.00751123	0.00751123	
Cyclohexane	0	0	0	
Heptane	0	0.00952656	0.00952656	
Benzene	0	0.00540248	0.00540248	
Toluene	0	0.0114244	0.0114244	
o-Xylene	0	0.00404831	0.00404831	
C8	0	0.00969042	0.00969042	
TEG	0	0	0	
Water	0	15.2837	15.2837	
CO2	0	0.00304018	0.00304018	
Nitrogen	11.8449	0.00432584	11.8454	
H2S	0	0.00242973	0.00242973	
2-Methylpentane	0	0.00609292	0.00609292	
Oxygen	3.1297	0	3.1297	

Remarks

Component Recoveries - Flowsheet1 Outlets

Status Solved

Recovery Stream Data Source - All Outlets in Flowsheet

Flowsheet	PStream	Flowsheet	PStream
Flowsheet1	Emissions	Flowsheet1	Liquids

Parameters

* Composition Basis	Molar Flow	* Atomic Basis	False
* Calculate Ratios	False	* Summation Only	False

Tabulated Data

Index	Flowsheet1.Emissions lbmol/h	Flowsheet1:Liquids lbmol/h	Summary Table lbmol/h	
Methane	0.00109412	7.29439E-06	0.00110142	
Ethane	0.000651711	4.1875E-06	0.000655898	
Propane	0.00056899	2.23408E-06	0.000571224	
Isobutane	9.92348E-05	1.81314E-07	9.94162E-05	
n-Butane	0.000372915	1.69111E-06	0.000374606	
Isopentane	8.62403E-05	2.00525E-07	8.64409E-05	
n-Pentane	0.000153936	4.2623E-07	0.000154362	
n-Hexane	0.000150221	1.97847E-07	0.000150418	
Cyclohexane	0	0	0	
Heptane	0.00019053	5.37234E-08	0.000190584	
Benzene	0.000107576	2.36669E-05	0.000131243	
Toluene	0.00022766	4.13553E-05	0.000269016	
o-Xylene	8.06639E-05	1.51157E-05	9.57796E-05	
C8	0.000193806	1.28997E-07	0.000193935	
TEG	0	0	0	
Water	2.40284	13.7154	16.1182	
CO2	0.718191	4.32444E-06	0.718195	
Nitrogen	11.8454	3.26078E-08	11.8454	

Copyright © 2002-2012 BRE Group, Ltd.
Licensed to West Virginia Division of Air Quality

Recoveries Report

Client Name	Markwest 017-00034	Job	Separator off of Still Vent on Dehy
Location	Sherwood Gas Plant		

Tabulated Data

Index	Flowsheet1:Emissions lbmol/h	Flowsheet1 Liquids lbmol/h	Summary Table lbmol/h	
H2S	0.00241792	1.1808E-05	0.00242973	
2-Methylpentane	0.000121854	1.91792E-07	0.000122046	
Oxygen	1.99729	0	1.99729	

Remarks

Component Recoveries - Flowsheet1 Losses

Status Solved

Reference Stream Data Source - All Outlets in Flowsheet

Flowsheet	PStream	Flowsheet	PStream
Flowsheet1	Emissions	Flowsheet1	Liquids

Recovery Stream Data Source - All Inlets in Flowsheet

Flowsheet	PStream	Flowsheet	PStream
Flowsheet1	Air	Flowsheet1	Still Vent

Parameters

* Composition Basis	Molar Flow	* Atomic Basis	False
* Calculate Ratios	False	* Summation Only	True

Tabulated Data

Index	Summary Table lbmol/h			
Methane	0.053612			
Ethane	0.0319338			
Propane	0.0278805			
Isobutane	0.00486251			
n-Butane	0.0182728			
Isopentane	0.00422578			
n-Pentane	0.00754287			
n-Hexane	0.00736081			
Cyclohexane	0			
Heptane	0.00933598			
Benzene	0.00527123			
Toluene	0.0111554			
o-Xylene	0.00395253			
C8	0.00949648			
TEG	0			
Water	-0.834512			
CO2	-0.715155			
Nitrogen	-1.21316E-11			
H2S	-6.76821E-11			
2-Methylpentane	0.00597087			
Oxygen	1.13241			

Remarks

Component Recoveries - Flowsheet1 Recoveries

Status Solved

ProMax 3.2.13330.0
Copyright © 2002-2012 BRE Group, Ltd.

Licensed to West Virginia Division of Air Quality

Recoveries Report

Client Name	Markwest 017-00034	Job Separator off of Still Vent on Dehy
Location	Sherwood Gas Plant	

Reference Stream Data Source - All Inlets in Flowsheet

Flowsheet	PStream	Flowsheet	PStream
Flowsheet1	Air	Flowsheet1	Still Vent

Recovery Stream Data Source - All Outlets in Flowsheet

Flowsheet	PStream	Flowsheet	PStream
Flowsheet1	Emissions	Flowsheet1	Liquids

Parameters

* Composition Basis	Molar Flow	* Atomic Basis	False
* Calculate Ratios	True	* Summation Only	False

Tabulated Data

Index	Flowsheet1.Emissions %	Flowsheet1 Liquids %	Summary Table %	
Methane	1.99973	0.013332	2.01307	
Ethane	1.99974	0.0128491	2.01259	
Propane	1.99984	0.00785217	2.0077	
Isobutane	1.99993	0.00365412	2.00358	
n-Butane	1.99982	0.00906884	2.00889	
Isopentane	1.99991	0.00465016	2.00456	
n-Pentane	1.99989	0.00553745	2.00543	
n-Hexane	1.99995	0.00263402	2.00258	
Cyclohexane	0	0	0	
Heptane	1.99999	0.000563933	2.00055	
Benzene	1.99124	0.438075	2.42931	
Toluene	1.99276	0.361992	2.35475	
o-Xylene	1.99253	0.373383	2.36592	
C8	1.99997	0.00133118	2.0013	
TEG	0	0	0	
Water	15.7216	89.7386	105.46	
CO2	23623.3	0.142243	23623.5	
Nitrogen	100	2.75279E-07	100	
H2S	99.514	0.485981	100	
2-Methylpentane	1.99994	0.00314779	2.00308	
Oxygen	63.8173	0	63.8173	

Remarks

ProMax 3.2.13330.0
Copyright © 2002-2012 BRE Group, Ltd.

Licensed to West Virginia Division of Air Quality

Energy Budgets Report

Client Name	Markwest 017-00034	Job Separator off of Still Vent on Dehy
Location	Sherwood Gas Plant	

Heat Budget - Project Power Budget

Status: Solved

Parameters

Net Power	0 hp	Total Power Required	0 hp
Total Power Supplied	0 hp		

Remarks

Heat Budget - Project Heat Budget

Status: Solved

Parameters

Net Duty	0 Btu/h	Total Duty Required	0 Btu/h
Total Duty Supplied	0 Btu/h		

Remarks

Heat Budget - Flowsheet1 Power Budget

Status: Solved

Parameters

Net Power	0 hp	Total Power Required	0 hp
Total Power Supplied	0 hp		

Remarks

Heat Budget - Flowsheet1 Heat Budget

Status: Solved

Parameters

Net Duty	0 Btu/h	Total Duty Required	0 Btu/h
Total Duty Supplied	0 Btu/h		

Remarks

ProMax 3.2.13330.0
Copyright © 2002-2012 BRE Group, Ltd.

Licensed to West Virginia Division of Air Quality

Andrews, Edward S

ID # 17-34
Reg R13-2914C
Company MarkWest
Facility Sherwood Initials EA

From: Andrews, Edward S
Sent: Wednesday, September 09, 2015 3:12 PM
To: 'Nathan Wheldon'
Cc: Jarrett, James F; dale.gable@markwest.com
Subject: RE: 017-00034_PERM_R13-2914C_PreDraft.docx
Attachments: 017-00034_PERM_R13-2914C_preDraftVersion2.docx

Nathan: Here is the update draft of R13-2914C based on your comments. My responses are in red.

Section 1.0 Emission Units

- Engines Serial Numbers are reversed on C-151 and C-152. C-151 should be BLB00753 and C-152 should be BLB00752
- Unit H-4711 is listed twice, it should be deleted from the general section. Updated the table accordingly.
- The three stabilization heater aren't necessarily associated with a particular process train, they could be put in the general section rather for each train. Updated the table accordingly.
- The mole sieve heaters are identical for trains 4-9, for 7-9 you list a control device for 4-6 you do not, for consistency make them the same either way is fine with me. Added the control devices for 4-6 in Table 1.0.
- FL-991 is listed as an emergency flare, while that is the purpose and there are only minor emissions otherwise the flare is also used to control blowdowns for maintenance purposes as described in the application. Corrected the purpose of the flares (Dehy and FL-991).

Section 3.0 Facility-Wide Requirements

- Section 3.1.7.a required that VOC content be less than 1% by weight. Does this statement have to be included? Our fuel currently is less than 1% by weight VOC but with the fuel content of 1,124 HHV listed in the application that could be above 1% by weight. I don't think it would ever be a problem but want to make sure. I adjusted compliance based on 12-months for VOCs and once per year for H2S.
- Section 3.1.7.b and 3.2.1 – Where does the limit of 1 grain per 100 cubic feet of gas come from? Pipeline specifications are 4 grains per 100 cubic feet of gas, this is the standard that MarkWest is required to meet to put gas in the pipeline. 4 grains per 100 cubic feet of gas should be the standard as is listed in Section 5.1.2.c. In Section 3.2.1 there is a requirement to analyze the VOC and sulfur content in the gas on a monthly basis. While the VOCs are taken with our in-line measurement system the sulfur compounds require a separate test. Because we are restricted by the sulfur content by the pipeline operator I am requesting that we only have to measure this on an annual basis for the DEP, which would be consistent with the testing period in Section 5.2.5. I adjusted the standard to 4 grains as suggested and omitted the sampling analysis in Condition 5.2.5. since I had it required in 3.2.2.

Section 4.0 Specific Requirements for the Compressor Engines

- Spelling error in title in the word catalysts. You have an i instead of a t. Corrected
- Section 4.1.3 is a spelling error, please replace the word expect with except. Corrected
- Section 4.1.4.a states that the air/fuel ratio will be less than 0.5% O2. That is a requirement that is for a rich-burn engine. These engines are lean burn engines and thus run around 10-12% O2. We cannot comply with 0.5% O2. In this section there are also references to NSCR, which is a three-way catalyst for use on rich-burn engines. Again, we have lean burn engines and the control is an oxidation catalyst. Please remove all references to NSCR from this and any other section as it does not apply to our facility. I believe points b and c are also related to NSCR and should be removed. Section d has not previously been a requirement for existing engines and it seems odd to add this requirement after the facility and those engines have been in operation for several years. Please delete parts a-d of Section 4.1.4. I updated this by omitting a. and c. Please let me know what you think about it?

Section 5.0 Specific Requirements for the Gas Dehydration Unit

- Section 5.1.2.b seems confusing, in the same paragraph you have a HAP limitation in lbs/hr and a VOC limitation in tpy. You may want to consider putting these in separate paragraphs. Also, for VOCs the limit is Enterprise Assurance claim to meet this low of a threshold and cannot meet that threshold. Our application

NON-CONFIDENTIAL

ID # ____
Reg ____
Company ____
Facility ____ Initials ____

states that we will have 0.043 tpy VOCs from the reboiler. Please change this limit to match the application. Please check all the HAP and VOC limits for the reboiler prior to separating them into separate paragraphs so we are not given a standard we cannot meet. Condition 5.1.2. is only for the reboiler and I have it down that it is fuel be the flash gas. So, I counted for the VOC & HAPs with a 95% DRE for the reboiler. If the reboiler is only fuel by residual gas, please let me know and I will corrected as you suggested.

- Section 5.1.3.d why is there a requirement to introduce supplemental fuel to the flare at a heat input rate of 1.37 mmbtu/hr? Generally the flare will not require any additional fuel as the btu content will be >>300 btu/scf. Please remove the second paragraph. I used ProMax, which indicates a net heating value of 304 Btu/ft^3, and omitted as suggested.
- Section 5.1.3.h - Part I Nox should be updated from 0.45 tpy to 0.48 tpy
- There is a second Section 5.1.3 please change it to 5.1.4 Corrected.
- Section 5.2.3 This requires a one hour test each quarter of each year since the flare was in service. This condition has not been in any previous permits is there a reason it is being added now? If this stays in the permit can you make sure the language is such that I will not be penalized for not doing this before it became a permit condition? This should have been in there from the beginning. I put an initial test data as of 180 days after issuance.
- Section 5.2.4 – please remove this section as supplemental fuel is not always required for the heater, the standard should be 300 btu/scf _ Ommited

Section 6.0 Specific Requirements Process Heaters

- Section 6.1.4 there is a typo. First word of second sentence should say Complying, not compiling. Corrected
- Section 6.4.1a Part of this section says that we have to record concentrations of NOx from the CEMS system. We do not have CEMS installed on any heater nor are we required to have CEMS on any heater. Can you please remove all references to CEMS in this and any other section. Removed the CEMS term.

Section 7.0 Specific Requirements for the Storage Tanks

- In Section 7.2 the first bullet is 7.2.2. It should be changed to 7.2.1. Corrected.
- Section 7.2 First bullet requires installing a continuous monitoring system for by-pass devices. I don't think we have by-pass devices but if we were to install one is it possible for us to manually record the time a by-pass it used. If the by-pass is manually controlled then the timing of the by-pass should also be manual. If it is an automatic system I would agree that a continuous monitor would be appropriate. Subpart OOOO will allow manual by-pass but such system has to have a means of indicating flow, which was include.
- Section 7.3.1 requires to do monitoring to show we are in compliance but does not specify the monitoring. Is this up to the company discretion or are there specific monitoring that needs to be performed. I included the monitoring under the LDAR for Closed vent systems of 8.1.2. & 8.2.2.
- In Section 7.5 the first bullet is 7.4.1. It should be changed to 7.5.1. Corrected
- Section 7.5.1 references testing in 7.2.1. Section 7.2.1 does not require testing so this seems to be a misdirected reference.

Section 8.0 Specific Requirements Gas Processing Units and LDAR Program

- Section 8.1.1.b some PSVs must vent to atmosphere for safety purposes, please consider rewriting this section to allow for this safety concern. Updated required in line with Subpart OOOO requirements.
- Section 8.1.1.j and k – these bullets are indented and should be even with the a-i bullets not the sub i and ii bullets. Corrected
- Section 8.2.3 please change the word recorded to record for grammatical correctness. Rephrased
- Section 8.4.4.b this references a standard in 8.1.1.a but there is no standard other than the pneumatic controllers much be air-driven and tagged. Is 8.4.4.b simply requiring everything is air-controlled? If so this seems redundant to be in both places. I omitted 8.4.4. and rephrased 8.1.1.a.

Section 8.5.3 Just checking that this is requiring all LDAR reports to be submitted to the state electronically rather than in the current paper format? Not yet. This reporting requirement is only the annual Method 21 to satisfy the AWP.

Should you have any questions/comments/suggestions, please contact me.

Sincerely,

Edward S. Andrews, P.E.
Engineer
West Virginia Department of Environmental Protection
Division of Air Quality
601 57th Street, SE
Charleston, WV 25304
304.926.0499 ext. 1214

From: Nathan Wheldon [mailto:Nathan.Wheldon@markwest.com]
Sent: Friday, August 28, 2015 10:03 PM
To: Andrews, Edward S
Subject: RE: 017-00034_PERM_R13-2914C_PreDraft.docx

Ed, sorry for the delay as I have been involved with the federal EPA on some other issues, I have comments from the pre-draft of the Sherwood permit. Most of the comments are not substantive but administrative. I will give you a call on Monday to follow up.

Section 1.0 Emission Units

- Engines Serial Numbers are reversed on C-151 and C-152. C-151 should be BLB00753 and C-152 should be BLB00752
- Unit H-4711 is listed twice, it should be deleted from the general section.
- The three stabilization heater aren't necessarily associated with a particular process train, they could be put in the general section rather for each train.
- The mole sieve heaters are identical for trains 4-9, for 7-9 you list a control device for 4-6 you do not, for consistency make them the same either way is fine with me.
- FL-991 is listed as an emergency flare, while that is the purpose and there are only minor emissions otherwise the flare is also used to control blowdowns for maintenance purposes as described in the application.

Section 3.0 Facility-Wide Requirements

- Section 3.1.7.a required that VOC content be less than 1% by weight. Does this statement have to be included? Our fuel currently is less than 1% by weight VOC but with the fuel content of 1,124 HHV listed in the application that could be above 1% by weight. I don't think it would ever be a problem but want to make sure.
- Section 3.1.7.b and 3.2.1 – Where does the limit of 1 grain per 100 cubic feet of gas come from? Pipeline specifications are 4 grains per 100 cubic feet of gas, this is the standard that MarkWest is required to meet to put gas in the pipeline. 4 grains per 100 cubic feet of gas should be the standard as is listed in Section 5.1.2.c. In Section 3.2.1 there is a requirement to analyze the VOC and sulfur content in the gas on a monthly basis. While the VOCs are taken with our in-line measurement system the sulfur compounds require a separate test. Because we are restricted by the sulfur content by the pipeline operator I am requesting that we only have to measure this on an annual basis for the DEP, which would be consistent with the testing period in Section 5.2.5.

Section 4.0 Specific Requirements for the Compressor Engines

- Spelling error in title in the word catalysts. You have an i instead of a t.
- Section 4.1.3 is a spelling error, please replace the word expect with except.
- Section 4.1.4.a states that the air/fuel ratio will be less than 0.5% O2. That is a requirement that is for a rich-burn engine. These engines are lean burn engines and thus run around 10-12% O2. We cannot comply with 0.5% O2. In this section there are also references to NSCR, which is a three-way catalyst for use on rich-burn

engines. Again, we have lean burn engines and the control is an oxidation catalyst. Please remove all references to NSCR from this and any other section as it does not apply to our facility. I believe points b and c are also related to NSCR and should be removed. Section d has not previously been a requirement for existing engines and it seems odd to add this requirement after the facility and those engines have been in operation for several years. Please delete parts a-d of Section 4.1.4.

Section 5.0 Specific Requirements for the Gas Dehydration Unit

- Section 5.1.2.b seems confusing, in the same paragraph you have a HAP limitation in lbs/hr and a VOC limitation in tpy. You may want to consider putting these in separate paragraphs. Also, for VOCs the limit is 0.01 tpy. We do not claim to meet this low of a threshold and cannot meet that threshold. Our application states that we will have 0.043 tpy VOCs from the reboiler. Please change this limit to match the application. Please check all the HAP and VOC limits for the reboiler prior to separating them into separate paragraphs so we are not given a standard we cannot meet.
- Section 5.1.3.d why is there a requirement to introduce supplemental fuel to the flare at a heat input rate of 1.37 mmbtu/hr? Generally the flare will not require any additional fuel as the btu content will be >>300 btu/scf. Please remove the second paragraph.
- Section 5.1.3.h - Part I Nox should be updated from 0.45 tpy to 0.48 tpy
- There is a second Section 5.1.3 please change it to 5.1.4
- Section 5.2.3 This requires a one hour test each quarter of each year since the flare was in service. This condition has not been in any previous permits is there a reason it is being added now? If this stays in the permit can you make sure the language is such that I will not be penalized for not doing this before it became a permit condition?
- Section 5.2.4 – please remove this section as supplemental fuel is not always required for the heater, the standard should be 300 btu/scf

Section 6.0 Specific Requirements Process Heaters

- Section 6.1.4 there is a typo. First word of second sentence should say Complying, not compiling.
- Section 6.4.1a Part of this section says that we have to record concentrations of NOx from the CEMS system. We do not have CEMS installed on any heater nor are we required to have CEMS on any heater. Can you please remove all references to CEMS in this and any other section.

Section 7.0 Specific Requirements for the Storage Tanks

- In Section 7.2 the first bullet is 7.2.2. It should be changed to 7.2.1.
- Section 7.2 First bullet requires installing a continuous monitoring system for by-pass devices. I don't think we have by-pass devices but if we were to install one is it possible for us to manually record the time a by-pass it used. If the by-pass is manually controlled then the timing of the by-pass should also be manual. If it is an automatic system I would agree that a continuous monitor would be appropriate.
- Section 7.3.1 requires to do monitoring to show we are in compliance but does not specify the monitoring. Is this up to the company discretion or are there specific monitoring that needs to be performed.
- In Section 7.5 the first bullet is 7.4.1. It should be changed to 7.5.1.
- Section 7.5.1 references testing in 7.2.1. Section 7.2.1 does not require testing so this seems to be a misdirected reference.

Section 8.0 Specific Requirements Gas Processing Units and LDAR Program

- Section 8.1.1.b some PSVs must vent to atmosphere for safety purposes, please consider rewriting this section to allow for this safety concern.
- Section 8.1.1.j and k – these bullets are indented and should be even with the a-i bullets not the sub i and ii bullets.
- Section 8.2.3 please change the word recorded to record for grammatical correctness.
- Section 8.4.4.b this references a standard in 8.1.1.a but there is no standard other than the pneumatic controllers much be air-driven and tagged. Is 8.4.4.b simply requiring everything is air-controlled? If so this seems redundant to be in both places.
- Section 8.5.3 Just checking that this is requiring all LDAR reports to be submitted to the state electronically rather than in the current paper format?

Nathan.

From: Andrews, Edward S [mailto:Edward.S.Andrews@wv.gov]
Sent: Friday, July 10, 2015 6:55 AM
To: Nathan Wheldon
Cc: Dale Gable; Jarrett, James F
Subject: 017-00034_PERM_R13-2914C_PreDraft.docx

Nathan: Here is your copy of a predraft for you to review. I will be putting together a packet together next week for my supervisor to review in the meanwhile. I don't set any specific date to receive comments back because my supervisor usually takes a few days to a few weeks to get back to me with her comments or issues with my recommendations. I will contact you at that point to see if you have comments/suggestions/issues with it before I make it available for public comment.

In the future, I will provide you a several documents how I came up with the emission limits. I notice that the emissions for the heaters that had manufacturer's data were not correct to zero percent oxygen. I corrected these rates (NOx CO and VOCs) to zero percent oxygen.

For the flares, I used a Technical Supplement for Flares published by the TCEQ (TCEQ publication RG-360A/11) . The emissions and flowrate limits were based on the 200,0000 lb/hr worst case event occurring 24 times a year assuming 100% propane with the purge gas & pilot lights gas. Per the dwg of the flare assembly, I counted 7 pilot lights instead of 6 as listed in the forms.

Should you have any questions about this email or the predraft, please contact me.

Sincerely,

Edward S. Andrews, P.E.
Engineer
West Virginia Department of Environmental Protection
Division of Air Quality
601 57th Street, SE
Charleston, WV 25304
304.926.0499 ext. 1214

Andrews, Edward S

From: Andrews, Edward S
Sent: Monday, August 31, 2015 7:58 AM
To: 'Nathan Wheldon'
Subject: RE: 017-00034_PERM_R13-2914C_PreDraft.docx

Nathan: Monday is not a good day to get me a call. I will follow-up with a summary response to your comments this week.

Ed

From: Nathan Wheldon [mailto:Nathan.Wheldon@markwest.com]
Sent: Friday, August 28, 2015 10:03 PM
To: Andrews, Edward S
Subject: RE: 017-00034_PERM_R13-2914C_PreDraft.docx

Ed, sorry for the delay as I have been involved with the federal EPA on some other issues, I have comments from the pre-draft of the Sherwood permit. Most of the comments are not substantive but administrative. I will give you a call on Monday to follow up.

Section 1.0 Emission Units

- Engines Serial Numbers are reversed on C-151 and C-152. C-151 should be BLB00753 and C-152 should be BLB00752
- Unit H-4711 is listed twice, it should be deleted from the general section.
- The three stabilization heater aren't necessarily associated with a particular process train, they could be put in the general section rather for each train.
- The mole sieve heaters are identical for trains 4-9, for 7-9 you list a control device for 4-6 you do not, for consistency make them the same either way is fine with me.
- FL-991 is listed as an emergency flare, while that is the purpose and there are only minor emissions otherwise the flare is also used to control blowdowns for maintenance purposes as described in the application.

Section 3.0 Facility-Wide Requirements

- Section 3.1.7.a required that VOC content be less than 1% by weight. Does this statement have to be included? Our fuel currently is less than 1% by weight VOC but with the fuel content of 1,124 HHV listed in the application that could be above 1% by weight. I don't think it would ever be a problem but want to make sure.
- Section 3.1.7.b and 3.2.1 – Where does the limit of 1 grain per 100 cubic feet of gas come from? Pipeline specifications are 4 grains per 100 cubic feet of gas, this is the standard that MarkWest is required to meet to put gas in the pipeline. 4 grains per 100 cubic feet of gas should be the standard as is listed in Section 5.1.2.c. In Section 3.2.1 there is a requirement to analyze the VOC and sulfur content in the gas on a monthly basis. While the VOCs are taken with our in-line measurement system the sulfur compounds require a separate test. Because we are restricted by the sulfur content by the pipeline operator I am requesting that we only have to measure this on an annual basis for the DEP, which would be consistent with the testing period in Section 5.2.5.

Section 4.0 Specific Requirements for the Compressor Engines

- Spelling error in title in the word catalysts. You have an i instead of a t.
- Section 4.1.3 is a spelling error, please replace the word expect with except.
- Section 4.1.4.a states that the air/fuel ratio will be less than 0.5% O2. That is a requirement that is for a rich-burn engine. These engines are lean burn engines and thus run around 10-12% O2. We cannot comply with 0.5% O2. In this section there are also references to NSCR, which is a three-way catalyst for use on rich-burn engines. Again, we have lean burn engines and the control is an oxidation catalyst. Please remove all

references to NSCR from this and any other section as it does not apply to our facility. I believe points b and c are also related to NSCR and should be removed. Section d has not previously been a requirement for existing engines and it seems odd to add this requirement after the facility and those engines have been in operation for several years. Please delete parts a-d of Section 4.1.4.

Section 5.0 Specific Requirements for the Gas Dehydration Unit

- Section 5.1.2.b seems confusing, in the same paragraph you have a HAP limitation in lbs/hr and a VOC limitation in tpy. You may want to consider putting these in separate paragraphs. Also, for VOCs the limit is 0.01 tpy. We do not claim to meet this low of a threshold and cannot meet that threshold. Our application states that we will have 0.043 tpy VOCs from the reboiler. Please change this limit to match the application. Please check all the HAP and VOC limits for the reboiler prior to separating them into separate paragraphs so we are not given a standard we cannot meet.
- Section 5.1.3.d why is there a requirement to introduce supplemental fuel to the flare at a heat input rate of 1.37 mmbtu/hr? Generally the flare will not require any additional fuel as the btu content will be >>300 btu/scf. Please remove the second paragraph.
- Section 5.1.3.h - Part I Nox should be updated from 0.45 tpy to 0.48 tpy
- There is a second Section 5.1.3 please change it to 5.1.4
- Section 5.2.3 This requires a one hour test each quarter of each year since the flare was in service. This condition has not been in any previous permits is there a reason it is being added now? If this stays in the permit can you make sure the language is such that I will not be penalized for not doing this before it became a permit condition?
- Section 5.2.4 – please remove this section as supplemental fuel is not always required for the heater, the standard should be 300 btu/scf

Section 6.0 Specific Requirements Process Heaters

- Section 6.1.4 there is a typo. First word of second sentence should say Complying, not compiling.
- Section 6.4.1a Part of this section says that we have to record concentrations of NOx from the CEMS system. We do not have CEMS installed on any heater nor are we required to have CEMS on any heater. Can you please remove all references to CEMS in this and any other section.

Section 7.0 Specific Requirements for the Storage Tanks

- In Section 7.2 the first bullet is 7.2.2. It should be changed to 7.2.1.
- Section 7.2 First bullet requires installing a continuous monitoring system for by-pass devices. I don't think we have by-pass devices but if we were to install one is it possible for us to manually record the time a by-pass it used. If the by-pass is manually controlled then the timing of the by-pass should also be manual. If it is an automatic system I would agree that a continuous monitor would be appropriate.
- Section 7.3.1 requires to do monitoring to show we are in compliance but does not specify the monitoring. Is this up to the company discretion or are there specific monitoring that needs to be performed.
- In Section 7.5 the first bullet is 7.4.1. It should be changed to 7.5.1.
- Section 7.5.1 references testing in 7.2.1. Section 7.2.1 does not require testing so this seems to be a misdirected reference.

Section 8.0 Specific Requirements Gas Processing Units and LDAR Program

- Section 8.1.1.b some PSVs must vent to atmosphere for safety purposes, please consider rewriting this section to allow for this safety concern.
- Section 8.1.1.j and k – these bullets are indented and should be even with the a-i bullets not the sub i and ii bullets.
- Section 8.2.3 please change the word recorded to record for grammatical correctness.
- Section 8.4.4.b this references a standard in 8.1.1.a but there is no standard other than the pneumatic controllers much be air-driven and tagged. Is 8.4.4.b simply requiring everything is air-controlled? If so this seems redundant to be in both places.
- Section 8.5.3 Just checking that this is requiring all LDAR reports to be submitted to the state electronically rather than in the current paper format?

Nathan.

From: Andrews, Edward S [mailto:Edward.S.Andrews@wv.gov]
Sent: Friday, July 10, 2015 6:55 AM
To: Nathan Wheldon
Cc: Dale Gable; Jarrett, James F
Subject: 017-00034_PERM_R13-2914C_PreDraft.docx

Nathan: Here is your copy of a predraft for you to review. I will be putting together a packet together next week for my supervisor to review in the meanwhile. I don't set any specific date to receive comments back because my supervisor usually takes a few days to a few weeks to get back to me with her comments or issues with my recommendations. I will contact you at that point to see if you have comments/suggestions/issues with it before I make it available for public comment.

In the future, I will provide you a several documents how I came up with the emission limits. I notice that the emissions for the heaters that had manufacturer's data were not correct to zero percent oxygen. I corrected these rates (NOx CO and VOCs) to zero percent oxygen.

For the flares, I used a Technical Supplement for Flares published by the TCEQ (TCEQ publication RG-360A/11) . The emissions and flowrate limits were based on the 200,0000 lb/hr worst case event occurring 24 times a year assuming 100% propane with the purge gas & pilot lights gas. Per the dwg of the flare assembly, I counted 7 pilot lights instead of 6 as listed in the forms.

Should you have any questions about this email or the predraft, please contact me.

Sincerely,

Edward S. Andrews, P.E.
Engineer
West Virginia Department of Environmental Protection
Division of Air Quality
601 57th Street, SE
Charleston, WV 25304
304.926.0499 ext. 1214

Andrews, Edward S

From: Nathan Wheldon <Nathan.Wheldon@markwest.com>
Sent: Friday, August 28, 2015 10:03 PM
To: Andrews, Edward S
Subject: RE: 017-00034_PERM_R13-2914C_PreDraft.docx

Ed, sorry for the delay as I have been involved with the federal EPA on some other issues, I have comments from the pre-draft of the Sherwood permit. Most of the comments are not substantive but administrative. I will give you a call on Monday to follow up.

Section 1.0 Emission Units

- Engines Serial Numbers are reversed on C-151 and C-152. C-151 should be BLB00753 and C-152 should be BLB00752
- Unit H-4711 is listed twice, it should be deleted from the general section.
- The three stabilization heater aren't necessarily associated with a particular process train, they could be put in the general section rather for each train.
- The mole sieve heaters are identical for trains 4-9, for 7-9 you list a control device for 4-6 you do not, for consistency make them the same either way is fine with me.
- FL-991 is listed as an emergency flare, while that is the purpose and there are only minor emissions otherwise the flare is also used to control blowdowns for maintenance purposes as described in the application.

Section 3.0 Facility-Wide Requirements

- Section 3.1.7.a required that VOC content be less than 1% by weight. Does this statement have to be included? Our fuel currently is less than 1% by weight VOC but with the fuel content of 1,124 HHV listed in the application that could be above 1% by weight. I don't think it would ever be a problem but want to make sure.
- Section 3.1.7.b and 3.2.1 – Where does the limit of 1 grain per 100 cubic feet of gas come from? Pipeline specifications are 4 grains per 100 cubic feet of gas, this is the standard that MarkWest is required to meet to put gas in the pipeline. 4 grains per 100 cubic feet of gas should be the standard as is listed in Section 5.1.2.c. In Section 3.2.1 there is a requirement to analyze the VOC and sulfur content in the gas on a monthly basis. While the VOCs are taken with our in-line measurement system the sulfur compounds require a separate test. Because we are restricted by the sulfur content by the pipeline operator I am requesting that we only have to measure this on an annual basis for the DEP, which would be consistent with the testing period in Section 5.2.5.

Section 4.0 Specific Requirements for the Compressor Engines

- Spelling error in title in the word catalysts. You have an i instead of a t.
- Section 4.1.3 is a spelling error, please replace the word expect with except.
- Section 4.1.4.a states that the air/fuel ratio will be less than 0.5% O2. That is a requirement that is for a rich-burn engine. These engines are lean burn engines and thus run around 10-12% O2. We cannot comply with 0.5% O2. In this section there are also references to NSCR, which is a three-way catalyst for use on rich-burn engines. Again, we have lean burn engines and the control is an oxidation catalyst. Please remove all references to NSCR from this and any other section as it does not apply to our facility. I believe points b and c are also related to NSCR and should be removed. Section d has not previously been a requirement for existing engines and it seems odd to add this requirement after the facility and those engines have been in operation for several years. Please delete parts a-d of Section 4.1.4.

Section 5.0 Specific Requirements for the Gas Dehydration Unit

- Section 5.1.2.b seems confusing, in the same paragraph you have a HAP limitation in lbs/hr and a VOC limitation in tpy. You may want to consider putting these in separate paragraphs. Also, for VOCs the limit is 0.01 tpy. We do not claim to meet this low of a threshold and cannot meet that threshold. Our application states that we will have 0.043 tpy VOCs from the reboiler. Please change this limit to match the

application. Please check all the HAP and VOC limits for the reboiler prior to separating them into separate paragraphs so we are not given a standard we cannot meet.

- Section 5.1.3.d why is there a requirement to introduce supplemental fuel to the flare at a heat input rate of 1.37 mmbtu/hr? Generally the flare will not require any additional fuel as the btu content will be >>300 btu/scf. Please remove the second paragraph.
- Section 5.1.3.h - Part I Nox should be updated from 0.45 tpy to 0.48 tpy
- There is a second Section 5.1.3 please change it to 5.1.4
- Section 5.2.3 This requires a one hour test each quarter of each year since the flare was in service. This condition has not been in any previous permits is there a reason it is being added now? If this stays in the permit can you make sure the language is such that I will not be penalized for not doing this before it became a permit condition?
- Section 5.2.4 – please remove this section as supplemental fuel is not always required for the heater, the standard should be 300 btu/scf

Section 6.0 Specific Requirements Process Heaters

- Section 6.1.4 there is a typo. First word of second sentence should say Complying, not compiling.
- Section 6.4.1a Part of this section says that we have to record concentrations of NOx from the CEMS system. We do not have CEMS installed on any heater nor are we required to have CEMS on any heater. Can you please remove all references to CEMS in this and any other section.

Section 7.0 Specific Requirements for the Storage Tanks

- In Section 7.2 the first bullet is 7.2.2. It should be changed to 7.2.1.
- Section 7.2 First bullet requires installing a continuous monitoring system for by-pass devices. I don't think we have by-pass devices but if we were to install one is it possible for us to manually record the time a by-pass it used. If the by-pass is manually controlled then the timing of the by-pass should also be manual. If it is an automatic system I would agree that a continuous monitor would be appropriate.
- Section 7.3.1 requires to do monitoring to show we are in compliance but does not specify the monitoring. Is this up to the company discretion or are there specific monitoring that needs to be performed.
- In Section 7.5 the first bullet is 7.4.1. It should be changed to 7.5.1.
- Section 7.5.1 references testing in 7.2.1. Section 7.2.1 does not require testing so this seems to be a misdirected reference.

Section 8.0 Specific Requirements Gas Processing Units and LDAR Program

- Section 8.1.1.b some PSVs must vent to atmosphere for safety purposes, please consider rewriting this section to allow for this safety concern.
- Section 8.1.1.j and k – these bullets are indented and should be even with the a-i bullets not the sub i and ii bullets.
- Section 8.2.3 please change the word recorded to record for grammatical correctness.
- Section 8.4.4.b this references a standard in 8.1.1.a but there is no standard other than the pneumatic controllers much be air-driven and tagged. Is 8.4.4.b simply requiring everything is air-controlled? If so this seems redundant to be in both places.
- Section 8.5.3 Just checking that this is requiring all LDAR reports to be submitted to the state electronically rather than in the current paper format?

Nathan.

From: Andrews, Edward S [mailto:Edward.S.Andrews@wv.gov]
Sent: Friday, July 10, 2015 6:55 AM
To: Nathan Wheldon
Cc: Dale Gable; Jarrett, James F
Subject: 017-00034_PERM_R13-2914C_PreDraft.docx

Nathan: Here is your copy of a predraft for you to review. I will be putting together a packet together next week for my supervisor to review in the meanwhile. I don't set any specific date to receive comments back because my supervisor usually takes a few days to a few weeks to get back to me with her comments or issues with my recommendations. I will contact you at that point to see if you have comments/suggestions/issues with it before I make it available for public comment.

In the future, I will provide you a several documents how I came up with the emission limits. I notice that the emissions for the heaters that had manufacturer's data were not correct to zero percent oxygen. I corrected these rates (NOx CO and VOCs) to zero percent oxygen.

For the flares, I used a Technical Supplement for Flares published by the TCEQ (TCEQ publication RG-360A/11) . The emissions and flowrate limits were based on the 200,0000 lb/hr worst case event occurring 24 times a year assuming 100% propane with the purge gas & pilot lights gas. Per the dwg of the flare assembly, I counted 7 pilot lights instead of 6 as listed in the forms.

Should you have any questions about this email or the predraft, please contact me.

Sincerely,

Edward S. Andrews, P.E.
Engineer
West Virginia Department of Environmental Protection
Division of Air Quality
601 57th Street, SE
Charleston, WV 25304
304.926.0499 ext. 1214

West Virginia Department of Environmental Protection

Earl Ray Tomblin
Governor

Division of Air Quality

Randy C. Huffman
Cabinet Secretary

Permit to Modify

R13-2914C

This permit is issued in accordance with the West Virginia Air Pollution Control Act (West Virginia Code §§22-5-1 et seq.) and 45 C.S.R. 13 – Permits for Construction, Modification, Relocation and Operation of Stationary Sources of Air Pollutants, Notification Requirements, Temporary Permits, General Permits and Procedures for Evaluation. The permittee identified at the above-referenced facility is authorized to construct the stationary sources of air pollutants identified herein in accordance with all terms and conditions of this permit.

Issued to:

MarkWest Liberty Midstream & Resources LLC
Sherwood Gas Plant
017-00034

William F. Durham
Director

Issued: DRAFT

This permit will supercede and replace Permit R13-2914B.

Facility Location:	218 Swisher Lane West Union, Doddridge County, West Virginia
Mailing Address:	1515 Arapahoe St. Tower 1 Suite 1600 Denver, CO 80202-2137
Facility Description:	Natural Gas Processing Plant
NAICS Codes:	211112
UTM Coordinates:	526.92 km Easting • 4,346.89 km Northing • Zone 17
Permit Type:	Modification
Description of Change:	This action is the installation and operation of three addition extraction units and one de-ethanizer unit. This modification will include the replace of the existing emergency flare.

Any person whose interest may be affected, including, but not necessarily limited to, the applicant and any person who participated in the public comment process, by a permit issued, modified or denied by the Secretary may appeal such action of the Secretary to the Air Quality Board pursuant to article one [§§22B-1-1 et seq.], Chapter 22B of the Code of West Virginia. West Virginia Code §§22-5-14.

As a result of the granting of this permit, the source is subject to 45CSR30. The Title V (45CSR30) application will be due within twelve (12) months after the date of the commencement of the operation or activity (Flare FL-991activities) authorized by this permit, unless granted a deferral or exemption by the Director from such filing deadline pursuant to a request from the permittee.

Table of Contents

1.0. Emission Units 5

1.1. Control Devices 7

2.0. General Conditions 8
2.1. Definitions 8
2.2. Acronyms 8
2.3. Authority 9
2.4. Term and Renewal 9
2.5. Duty to Comply 9
2.6. Duty to Provide Information 9
2.7. Duty to Supplement and Correct Information 9
2.8. Administrative Update 10
2.9. Permit Modification 10
2.10 Major Permit Modification 10
2.11. Inspection and Entry 10
2.12. Emergency 10
2.13. Need to Halt or Reduce Activity Not a Defense 11
2.14. Suspension of Activities 11
2.15. Property Rights 11
2.16. Severability 12
2.17. Transferability 12
2.18. Notification Requirements 12
2.19. Credible Evidence 12

3.0. Facility-Wide Requirements 13
3.1. Limitations and Standards 13
3.2. Monitoring Requirements 14
3.3. Testing Requirements 14
3.4. Recordkeeping Requirements 15
3.5. Reporting Requirements 15

4.0. Specific Requirements for the Compressor Engines 17
4.1. Limitations and Standards 17
4.2. Monitoring Requirements 19
4.3. Testing Requirements 19
4.4. Recordkeeping Requirements 19
4.5. Reporting Requirements 20

5.0. Specific Requirements for Production Gas Dehydration Unit 22
5.1. Limitations and Standards 22
5.2. Monitoring Requirements 23
5.3. Testing Requirements 24
5.4. Recordkeeping Requirements 24

6.0. Specific Requirements Process Heaters 26
6.1. Limitations and Standards 26
6.2. Monitoring Requirements 27
6.3. Testing Requirements 27
6.4. Recordkeeping Requirements 28
6.5. Reporting Requirements 28

7.0. Specific Requirements for the Storage Tanks 29

7.1. Limitations and Standards 29
7.2. Monitoring Requirements 30
7.3. Testing Requirements 30
7.4. Recordkeeping Requirements 30
7.5. Reporting Requirements 30

8.0. Specific Requirements Gas Processing Units & LDAR Program 31
8.1. Limitations and Standards 31
8.2. Monitoring Requirements 34
8.3. Testing Requirements 36
8.4. Recordkeeping Requirements 36
8.5. Reporting Requirements 41

CERTIFICATION OF DATA ACCURACY 42

1.0. Emission Units

Emission Unit ID	Emission Point ID	Emission Unit Description	Year Installed	Design Capacity	Control Device
CM-1001	CM-1001	Caterpillar G3616 LE Compressor Engine C-151 Compressor SN: BLB00753	2012	4,735 hp	Oxidation Catalyst
CM-1002	CM-1002	Caterpillar G3616 LE Compressor Engine C-152 Compressor SN: BLB00752	2012	4,735 hp	Oxidation Catalyst
CM-2001	CM-2001	Caterpillar G3608 LE Compressor Engine Compressor SN:BEN00765	2012	2,370 hp	Oxidation Catalyst
DH-001		TEG Dehydration Unit Still Vent	2012	120 MMscfd	Flare
		Flash Tank			Reboiler fuel/RCRC
RB-001	RB-001	TEG Dehydration Unit Reboiler	2012	2.0 MMBTU/hr	None
FL-991	FL-991	Emergency Flare	2012	68,600 scf/min	NA
TNK-001	TNK-001	5 Storage Tanks (1-500 bbl gunbarrel tank, 4-400 bbl condensate/water tanks)	2012	See Description	VRU
H-742	H-742	Stabilization Heater	2014	2.28 MMBTU/hr	None
H-2724	H-2724	Stabilization Heater	2015	2.28 MMBTU/hr	None
H-3724	H-3724	Stabilization Heater	2015	2.28 MMBTU/hr	None
Pressure Vessels	Pressure Vessels	4 - 70,000 gallon NGL Tanks	2012	4@70,000 gallons	Pressure Vessels
Sherwood 1 Extraction Train					
H-711	H-711	Mole Sieve Regeneration Heater	2012	7.86 MMBTU/hr	None
H-771	H-771	Hot Oil Heater	2012	28.25 MMBTU/hr	None
Sherwood 2 Extraction Train					
H-2711	H-2711	Mole Sieve Regeneration Heater	2013	7.86 MMBTU/hr	None
Sherwood 3 Extraction Train					
H-3711	H-3711	Mole Sieve Regeneration Heater	2013	7.86 MMBTU/hr	None
Sherwood 4 Extraction Train					

Emission Unit ID	Emission Point ID	Emission Unit Description	Year Installed	Design Capacity	Control Device
H-4711	H-4711	Mole Sieve Regeneration Heater	2013	18.0 MMBTU/hr	IFGR w/LowNOx Burner
H-4712	H-4712	Hot Oil Heater	2014	6.60 MMBTU/hr	None
Sherwood 5 Extraction Train					
H-5711	H-5711	Mole Sieve Regeneration Heater	2014	18.00 MMBTU/hr	IFGR w/LowNOx Burner
Sherwood 6 Extraction Train					
H-6711	H-6711	Mole Sieve Regeneration Heater	2015	18.00 MMBTU/hr	IFGR w/LowNOx Burner
H-6712	H-6712	Hot Oil Heater	2015	6.60 MMBTU/hr	None
Sherwood 7 Extraction Train					
H-7711	H-7711	Mole Sieve Regeneration Heater	2015	18.00 MMBTU/hr	IFGR w/LowNOx Burner
Sherwood 8 Extraction Train					
H-8711	H-8711	Mole Sieve Regeneration Heater	2015	18.00 MMBTU/hr	IFGR w/LowNOx Burner
H-8712	H-8712	Hot Oil Heater	2015	6.60 MMBTU/hr	None
Sherwood 9 Extraction Train					
H-9711	H-9711	Mole Sieve Regeneration Heater	2016	18.00 MMBTU/hr	IFGR w/LowNOx Burner
DeEthanizer Unit					
D1-H-782	D1-H-782	DeEthanizer HMO Process Heater Configured with 8 burners w/Maximum Heat Release of 14.9 MMBtu/hr for each burner	2015	119.2* MMBTU/hr	FGR w/Low NOx Burner
D1-H-741	D1-H-741	DeEthanizer Regeneration Heater	2015	12.53	
Tank Farm					
TK-825	TK-825	Floor Drain Storage Tank	2012	4,200 gal	None
TK-826	TK-826	Lube Oil Storage Tank	2012	4,200 gal	None
TK-824	TK-824	Floor Drain Storage Tank	2012	4,200 gal	None
TK-2821	TK-2821	Methanol Storage Tank	2012	3,780 gal	None
TK-2951	TK-2951	Lube Oil Storage Tank	2012	1,000 gal	None

Emission Unit ID	Emission Point ID	Emission Unit Description	Year Installed	Design Capacity	Control Device
TK-2941	TK-2941	Lube Oil Storage Tank	2012	1,000 gal	None
TK-2896	TK-2896	Floor Drain Storage Tank	2012	500 gal	None
TK-2950	TK-2950	Propane Storage Tank	2012	500 gal	None
		Truck Loading Condensate	2015		VRU

*- Normal Maximum Heat Release Rate of the burners
FGR - Flue Gas Recirculation
IFGR - Integrated Flue Gas Recirculation
RCRC – Recycle or recompression

1.1. Control Devices

Emission Point ID	Control Device	Emission Unit	Pollutant	Control Efficiency
CM-1001 CM-1002	Oxidation Catalyst	Caterpillar G3616 LE Compressor Engines	Carbon Monoxide	95 %
			Volatile Organic Compounds	75 %
			Formaldehyde	90 %
CM-2001	Oxidation Catalyst	Caterpillar G3608 Compressor Engine	Carbon Monoxide	95 %
			Volatile Organic Compounds	75 %
			Formaldehyde	90 %
DH-001	Flare	TEG Dehydration Unit Still Vent, Emergency Use	Volatile Organic Compounds	98 %
			Total Hazardous Air Pollutants	98 %
FL-991	Flare	Emergency Use (Unit Blowdown & Maintenance Purposes)	Volatile Organic Compounds	98 %
			Total Hazardous Air Pollutants	98 %
TNK-001	Vapor Recovery Unit	Condensate Storage Tanks	Volatile Organic Compounds	98 %
			Total Hazardous Air Pollutants	98 %

2.0. General Conditions

2.1. Definitions

2.1.1. All references to the "West Virginia Air Pollution Control Act" or the "Air Pollution Control Act" mean those provisions contained in W.Va. Code §§ 22-5-1 to 22-5-18.

2.1.2. The "Clean Air Act" means those provisions contained in 42 U.S.C. §§ 7401 to 7671q, and regulations promulgated thereunder.

2.1.3. "Secretary" means the Secretary of the Department of Environmental Protection or such other person to whom the Secretary has delegated authority or duties pursuant to W.Va. Code §§ 22-1-6 or 22-1-8 (45CSR§30-2.12.). The Director of the Division of Air Quality is the Secretary's designated representative for the purposes of this permit.

2.2. Acronyms

CAAA	Clean Air Act Amendments	**NO_X**	Nitrogen Oxides
CBI	Confidential Business Information	**NSPS**	New Source Performance Standards
CEM	Continuous Emission Monitor	**PM**	Particulate Matter
CES	Certified Emission Statement	**$PM_{2.5}$**	Particulate Matter less than 2.5 µm in diameter
C.F.R. *or* CFR	Code of Federal Regulations	**PM_{10}**	Particulate Matter less than 10µm in diameter
CO	Carbon Monoxide	**Ppb**	Pounds per Batch
C.S.R. *or* CSR	Codes of State Rules	**Pph**	Pounds per Hour
DAQ	Division of Air Quality	**Ppm**	Parts per Million
DEP	Department of Environmental Protection	**Ppm_V or ppmv**	Parts per Million by Volume
dscm	Dry Standard Cubic Meter	**PSD**	Prevention of Significant Deterioration
FOIA	Freedom of Information Act	**Psi**	Pounds per Square Inch
HAP	Hazardous Air Pollutant	**SIC**	Standard Industrial Classification
HON	Hazardous Organic NESHAP	**SIP**	State Implementation Plan
HP	Horsepower	**SO_2**	Sulfur Dioxide
lbs/hr	Pounds per Hour	**TAP**	Toxic Air Pollutant
LDAR	Leak Detection and Repair	**TPY**	Tons per Year
M	Thousand	**TRS**	Total Reduced Sulfur
MACT	Maximum Achievable Control Technology	**TSP**	Total Suspended Particulate
MDHI	Maximum Design Heat Input	**USEPA**	United States Environmental Protection Agency
MM	Million	**UTM**	Universal Transverse Mercator
MMBtu/hr *or* mmbtu/hr	Million British Thermal Units per Hour	**VEE**	Visual Emissions Evaluation
MMCF/hr *or* mmcf/hr	Million Cubic Feet per Hour	**VOC**	Volatile Organic Compounds
NA	Not Applicable	**VOL**	Volatile Organic Liquids
NAAQS	National Ambient Air Quality Standards		
NESHAPS	National Emissions Standards for Hazardous Air Pollutants		

2.3. Authority

This permit is issued in accordance with West Virginia Air Pollution Control Act W.Va. Code §§ 22-5-1. et seq. and the following Legislative Rules promulgated thereunder:

2.3.1. 45CSR13 – *Permits for Construction, Modification, Relocation and Operation of Stationary Sources of Air Pollutants, Notification Requirements, Temporary Permits, General Permits and Procedures for Evaluation*;

2.4. Term and Renewal

2.4.1. This permit supersedes and replaces previously issued Permit R13-2914B. This Permit shall remain valid, continuous and in effect unless it is revised, suspended, revoked or otherwise changed under an applicable provision of 45CSR13 or any other applicable legislative rule;

2.5. Duty to Comply

2.5.1. The permitted facility shall be constructed and operated in accordance with the plans and specifications filed in Permit Application R13-2914, R13-2914A, R13-2914B, R13-2914C and any modifications, administrative updates, or amendments thereto. The Secretary may suspend or revoke a permit if the plans and specifications upon which the approval was based are not adhered to;
[45CSR§§13-5.11 and 10.3.]

2.5.2. The permittee must comply with all conditions of this permit. Any permit noncompliance constitutes a violation of the West Virginia Code and the Clean Air Act and is grounds for enforcement action by the Secretary or USEPA;

2.5.3. Violations of any of the conditions contained in this permit, or incorporated herein by reference, may subject the permittee to civil and/or criminal penalties for each violation and further action or remedies as provided by West Virginia Code 22-5-6 and 22-5-7;

2.5.4. Approval of this permit does not relieve the permittee herein of the responsibility to apply for and obtain all other permits, licenses, and/or approvals from other agencies; i.e., local, state, and federal, which may have jurisdiction over the construction and/or operation of the source(s) and/or facility herein permitted.

2.6. Duty to Provide Information

The permittee shall furnish to the Secretary within a reasonable time any information the Secretary may request in writing to determine whether cause exists for administratively updating, modifying, revoking, or terminating the permit or to determine compliance with the permit. Upon request, the permittee shall also furnish to the Secretary copies of records to be kept by the permittee. For information claimed to be confidential, the permittee shall furnish such records to the Secretary along with a claim of confidentiality in accordance with 45CSR31. If confidential information is to be sent to USEPA, the permittee shall directly provide such information to USEPA along with a claim of confidentiality in accordance with 40 C.F.R. Part 2.

2.7. Duty to Supplement and Correct Information

Upon becoming aware of a failure to submit any relevant facts or a submittal of incorrect information in any permit application, the permittee shall promptly submit to the Secretary such supplemental facts or corrected information.

2.8. Administrative Update

The permittee may request an administrative update to this permit as defined in and according to the procedures specified in 45CSR13.
[45CSR§13-4.]

2.9. Permit Modification

The permittee may request a minor modification to this permit as defined in and according to the procedures specified in 45CSR13.
[45CSR§13-5.4.]

2.10 Major Permit Modification

The permittee may request a major modification as defined in and according to the procedures specified in 45CSR14 or 45CSR19, as appropriate.
[45CSR§13-5.1]

2.11. Inspection and Entry

The permittee shall allow any authorized representative of the Secretary, upon the presentation of credentials and other documents as may be required by law, to perform the following:

a. At all reasonable times (including all times in which the facility is in operation) enter upon the permittee's premises where a source is located or emissions related activity is conducted, or where records must be kept under the conditions of this permit;

b. Have access to and copy, at reasonable times, any records that must be kept under the conditions of this permit;

c. Inspect at reasonable times (including all times in which the facility is in operation) any facilities, equipment (including monitoring and air pollution control equipment), practices, or operations regulated or required under the permit; and

d. Sample or monitor at reasonable times substances or parameters to determine compliance with the permit or applicable requirements or ascertain the amounts and types of air pollutants discharged.

2.12. Emergency

2.12.1. An "emergency" means any situation arising from sudden and reasonable unforeseeable events beyond the control of the source, including acts of God, which situation requires immediate corrective action to restore normal operation, and that causes the source to exceed a technology-based emission limitation under the permit, due to unavoidable increases in emissions attributable to the emergency. An emergency shall not include noncompliance to the extent caused by improperly designed equipment, lack of preventative maintenance, careless or improper operation, or operator error.

2.12.2. Effect of any emergency. An emergency constitutes an affirmative defense to an action brought for noncompliance with such technology-based emission limitations if the conditions of Section 2.12.3 are met.

2.12.3. The affirmative defense of emergency shall be demonstrated through properly signed, contemporaneous operating logs, or other relevant evidence that:

a. An emergency occurred and that the permittee can identify the cause(s) of the emergency;

b. The permitted facility was at the time being properly operated;

c. During the period of the emergency the permittee took all reasonable steps to minimize levels of emissions that exceeded the emission standards, or other requirements in the permit; and

d. The permittee submitted notice of the emergency to the Secretary within one (1) working day of the time when emission limitations were exceeded due to the emergency and made a request for variance, and as applicable rules provide. This notice must contain a detailed description of the emergency, any steps taken to mitigate emissions, and corrective actions taken.

2.12.4. In any enforcement proceeding, the permittee seeking to establish the occurrence of an emergency has the burden of proof.

2.12.5 The provisions of this section are in addition to any emergency or upset provision contained in any applicable requirement.

2.13. Need to Halt or Reduce Activity Not a Defense

It shall not be a defense for a permittee in an enforcement action that it should have been necessary to halt or reduce the permitted activity in order to maintain compliance with the conditions of this permit. However, nothing in this paragraph shall be construed as precluding consideration of a need to halt or reduce activity as a mitigating factor in determining penalties for noncompliance if the health, safety, or environmental impacts of halting or reducing operations would be more serious than the impacts of continued operations.

2.14. Suspension of Activities

In the event the permittee should deem it necessary to suspend, for a period in excess of sixty (60) consecutive calendar days, the operations authorized by this permit, the permittee shall notify the Secretary, in writing, within two (2) calendar weeks of the passing of the sixtieth (60) day of the suspension period.

2.15. Property Rights

This permit does not convey any property rights of any sort or any exclusive privilege.

2.16. Severability

The provisions of this permit are severable and should any provision(s) be declared by a court of competent jurisdiction to be invalid or unenforceable, all other provisions shall remain in full force and effect.

2.17. Transferability

This permit is transferable in accordance with the requirements outlined in Section 10.1 of 45CSR13. **[45CSR§13-10.1.]**

2.18. Notification Requirements

The permittee shall notify the Secretary, in writing, no later than thirty (30) calendar days after the actual startup of the operations authorized under this permit.

2.19. Credible Evidence

Nothing in this permit shall alter or affect the ability of any person to establish compliance with, or a violation of, any applicable requirement through the use of credible evidence to the extent authorized by law. Nothing in this permit shall be construed to waive any defense otherwise available to the permittee including, but not limited to, any challenge to the credible evidence rule in the context of any future proceeding.

3.0. Facility-Wide Requirements

3.1. Limitations and Standards

3.1.1. **Open burning.** The open burning of refuse by any person, firm, corporation, association or public agency is prohibited except as noted in 45CSR§6-3.1.
[45CSR§6-3.1.]

3.1.2. **Open burning exemptions.** The exemptions listed in 45CSR§6-3.1 are subject to the following stipulation: Upon notification by the Secretary, no person shall cause, suffer, allow or permit any form of open burning during existing or predicted periods of atmospheric stagnation. Notification shall be made by such means as the Secretary may deem necessary and feasible.
[45CSR§6-3.2.]

3.1.3. **Asbestos.** The permittee is responsible for thoroughly inspecting the facility, or part of the facility, prior to commencement of demolition or renovation for the presence of asbestos and complying with 40 C.F.R. § 61.145, 40 C.F.R. § 61.148, and 40 C.F.R. § 61.150. The permittee, owner, or operator must notify the Secretary at least ten (10) working days prior to the commencement of any asbestos removal on the forms prescribed by the Secretary if the permittee is subject to the notification requirements of 40 C.F.R. § 61.145(b)(3)(i). The USEPA, the Division of Waste Management, and the Bureau for Public Health - Environmental Health require a copy of this notice to be sent to them.
[40CFR§61.145(b) and 45CSR§34]

3.1.4. **Odor.** No person shall cause, suffer, allow or permit the discharge of air pollutants which cause or contribute to an objectionable odor at any location occupied by the public.
[45CSR§4-3.1] ***[State Enforceable Only]***

3.1.5. **Permanent shutdown.** A source which has not operated at least 500 hours in one 12-month period within the previous five (5) year time period may be considered permanently shutdown, unless such source can provide to the Secretary, with reasonable specificity, information to the contrary. All permits may be modified or revoked and/or reapplication or application for new permits may be required for any source determined to be permanently shutdown.
[45CSR§13-10.5.]

3.1.6. **Standby plan for reducing emissions.** When requested by the Secretary, the permittee shall prepare standby plans for reducing the emissions of air pollutants in accordance with the objectives set forth in Tables I, II, and III of 45CSR11.
[45CSR§11-5.2.]

3.1.7. The fuel gas (residue gas) for the facility shall not exceed the following on a rolling 12-month basis:

a. Total VOCs content of the gas greater than 1% by weight.

b. Hydrogen sulfide or total sulfur compounds greater than 4 grain per 100 cubic feet of gas.

3.2. Monitoring Requirements

3.2.1. The permittee shall analysis the fuel gas for the facility once per month. Such analysis shall determine the net heating value, percentage of VOC in the fuel gas. Such analysis shall be maintained in accordance with Condition 3.4.1.

3.2.2. For the purpose of demonstrating compliance with Conditions 3.1.7., 5.1.2.c., and 5.1.3.h.vi., the permittee shall conduct gas sampling at a point that is representative of the incoming field gas and analyzing the sample to determine the hydrogen sulfide content of the sample. At the minimum, such sampling and analysis shall be conducted once per year and thereafter. Once per year shall mean between 11 months to 13 months from the previous gas sampling. Records of such monitoring shall be maintained in accordance with Condition 3.4.1. of this permit.
[45 CSR §10-8.3.a.]

3.3. Testing Requirements

3.3.1. **Stack testing.** As per provisions set forth in this permit or as otherwise required by the Secretary, in accordance with the West Virginia Code, underlying regulations, permits and orders, the permittee shall conduct test(s) to determine compliance with the emission limitations set forth in this permit and/or established or set forth in underlying documents. The Secretary, or his duly authorized representative, may at his option witness or conduct such test(s). Should the Secretary exercise his option to conduct such test(s), the operator shall provide all necessary sampling connections and sampling ports to be located in such manner as the Secretary may require, power for test equipment and the required safety equipment, such as scaffolding, railings and ladders, to comply with generally accepted good safety practices. Such tests shall be conducted in accordance with the methods and procedures set forth in this permit or as otherwise approved or specified by the Secretary in accordance with the following:

a. The Secretary may on a source-specific basis approve or specify additional testing or alternative testing to the test methods specified in the permit for demonstrating compliance with 40 C.F.R. Parts 60, 61, and 63 in accordance with the Secretary's delegated authority and any established equivalency determination methods which are applicable. If a testing method is specified or approved which effectively replaces a test method specified in the permit, the permit may be revised in accordance with 45CSR§13-4. or 45CSR§13-5.4 as applicable.

b. The Secretary may on a source-specific basis approve or specify additional testing or alternative testing to the test methods specified in the permit for demonstrating compliance with applicable requirements which do not involve federal delegation. In specifying or approving such alternative testing to the test methods, the Secretary, to the extent possible, shall utilize the same equivalency criteria as would be used in approving such changes under Section 3.3.1.a. of this permit. If a testing method is specified or approved which effectively replaces a test method specified in the permit, the permit may be revised in accordance with 45CSR§13-4. or 45CSR§13-5.4 as applicable.

c. All periodic tests to determine mass emission limits from or air pollutant concentrations in discharge stacks and such other tests as specified in this permit shall be conducted in accordance with an approved test protocol. Unless previously approved, such protocols shall be submitted to the Secretary in writing at least thirty (30) days prior to any testing and shall contain the information set forth by the Secretary. In addition, the permittee shall notify the Secretary at least fifteen (15) days prior to any testing so the Secretary may have the

opportunity to observe such tests. This notification shall include the actual date and time during which the test will be conducted and, if appropriate, verification that the tests will fully conform to a referenced protocol previously approved by the Secretary.

d. The permittee shall submit a report of the results of the stack test within sixty (60) days of completion of the test. The test report shall provide the information necessary to document the objectives of the test and to determine whether proper procedures were used to accomplish these objectives. The report shall include the following: the certification described in paragraph 3.5.1.; a statement of compliance status, also signed by a responsible official; and, a summary of conditions which form the basis for the compliance status evaluation. The summary of conditions shall include the following:

1. The permit or rule evaluated, with the citation number and language;
2. The result of the test for each permit or rule condition; and,
3. A statement of compliance or noncompliance with each permit or rule condition.

[WV Code § 22-5-4(a)(14-15) and 45CSR13]

3.4. Recordkeeping Requirements

3.4.1. **Retention of records.** The permittee shall maintain records of all information (including monitoring data, support information, reports, and notifications) required by this permit recorded in a form suitable and readily available for expeditious inspection and review. Support information includes all calibration and maintenance records and all original strip-chart recordings for continuous monitoring instrumentation. The files shall be maintained for at least five (5) years following the date of each occurrence, measurement, maintenance, corrective action, report, or record. At a minimum, the most recent two (2) years of data shall be maintained on site. The remaining three (3) years of data may be maintained off site, but must remain accessible within a reasonable time. Where appropriate, the permittee may maintain records electronically (on a computer, on computer floppy disks, CDs, DVDs, or magnetic tape disks), on microfilm, or on microfiche.

3.4.2. **Odors.** For the purposes of 45CSR4, the permittee shall maintain a record of all odor complaints received, any investigation performed in response to such a complaint, and any responsive action(s) taken.
[45CSR§4. *State Enforceable Only.*]

3.5. Reporting Requirements

3.5.1. **Responsible official.** Any application form, report, or compliance certification required by this permit to be submitted to the DAQ and/or USEPA shall contain a certification by the responsible official that states that, based on information and belief formed after reasonable inquiry, the statements and information in the document are true, accurate, and complete.

3.5.2. **Confidential information.** A permittee may request confidential treatment for the submission of reporting required by this permit pursuant to the limitations and procedures of W.Va. Code § 22-5-10 and 45CSR31.

3.5.3. **Correspondence.** All notices, requests, demands, submissions and other communications required or permitted to be made to the Secretary of DEP and/or USEPA shall be made in writing and shall be deemed to have been duly given when delivered by hand, or mailed first class with

postage prepaid to the address(es) set forth below or to such other person or address as the Secretary of the Department of Environmental Protection may designate:

If to the DAQ:
Director
WVDEP
Division of Air Quality
601 57th Street
Charleston, WV 25304-2345

If to the US EPA:
Associate Director
Office of Air Enforcement and Compliance Assistance
(3AP20)
U.S. Environmental Protection Agency
Region III
1650 Arch Street
Philadelphia, PA 19103-2029

3.5.4. Operating Fee

3.5.4.1. In accordance with 45CSR30 – Operating Permit Program, the permittee shall submit a certified emissions statement and pay fees on an annual basis in accordance with the submittal requirements of the Division of Air Quality. A receipt for the appropriate fee shall be maintained on the premises for which the receipt has been issued, and shall be made immediately available for inspection by the Secretary or his/her duly authorized representative.

3.5.5. **Emission inventory.** At such time(s) as the Secretary may designate, the permittee herein shall prepare and submit an emission inventory for the previous year, addressing the emissions from the facility and/or process(es) authorized herein, in accordance with the emission inventory submittal requirements of the Division of Air Quality. After the initial submittal, the Secretary may, based upon the type and quantity of the pollutants emitted, establish a frequency other than on an annual basis.

4.0. Specific Requirements for the Compressor Engines

4.1. Limitations and Standards

4.1.1. The following conditions and requirements are specific to the internal combustion engines identified as CM-1001 and CM-1002 and the connected compressors:

a. Emissions from each engine shall not exceed the following:

i. NO_x emissions from the engine shall not exceed 82 ppmvd at 15 percent O_2. The mass rate of NO_x emissions from each engine shall not exceed 5.22 pounds per hour and 22.86 tpy.

ii. CO emissions from engine shall not exceed 270 ppmvd at 15 percent O_2. The mass rate of CO emissions from each engine shall not exceed 1.46 pounds per hour and 6.40 tpy.

iii. VOC emissions from the engine shall not exceed 86 ppmvd at 15 percent O_2. Formaldehyde is excluded from this VOC limit. The mass rate of VOC emissions shall not exceed 1.67 pounds per hour and 7.32 tpy.
[40 CFR §60.4333(e) & Table 1 to Subpart JJJJ of Part 60—NO_X, CO, and VOC Emission Standards for Stationary Non-Emergency SI Engines ≥100 HP (Except Gasoline and Rich Burn LPG), Stationary SI Landfill/Digester Gas Engines, and Stationary Emergency Engines >25 HP]

iv. Formaldehyde emissions from each engine shall not exceed 0.42 pounds per hour and 1.83 tpy.

b. Each engine shall be equipped with an oxidation catalyst air pollution control device.

c. Each engine shall be equipped with air to fuel controller. The AFR controller must be maintained and operated appropriately in order to ensure proper operation of the engine and control device to minimize emissions at all times.
[40 CFR §60.4243(g)]

d. Each engine shall be equipped with a non-resettable hour meter.

e. Compliance with the mass emission limits in item a of this condition is satisfied by Compiling with Condition 4.1.4. and not exceeding the following concentrations during performance testing:

i. NO_x concentration of 57.6 ppmvd at 15% O_2.

ii. CO concentration of 26.0 ppmvd at 15% O_2.

iii. VOC concentration of 18.9 ppmvd at 15% O_2

f. The permittee shall replace the rod packing in each affected compressor once every 26,000 hours of operation.
[40 CFR §60.5385(a)(1)]

4.1.2. The following conditions and requirements are specific to the internal combustion engines identified as CM-2001:

a. Emissions from the engine shall not exceed the following:

i. NO_x emissions from the engine shall not exceed 82 ppmvd at 15 percent O_2. The mass rate of NO_x emissions shall not exceed 2.61 pounds per hour and 11.44 tpy.

ii. CO emissions from engine shall not exceed 270 ppmvd at 15 percent O_2. The mass rate of CO emissions shall not exceed 0.73 pounds per hour and 3.20 tpy

iii. VOC emissions from the engine shall not exceed 86 ppmvd at 15 percent O_2. Formaldehyde is excluded from this VOC limit. . The mass rate of VOC emissions shall not exceed 1.46 pounds per hour and 6.41 tpy.
[40 CFR §60.4333(e) & Table 1 to Subpart JJJJ of Part 60—NO_X, CO, and VOC Emission Standards for Stationary Non-Emergency SI Engines ≥100 HP (Except Gasoline and Rich Burn LPG), Stationary SI Landfill/Digester Gas Engines, and Stationary Emergency Engines >25 HP]

iv. Formaldehyde emissions from each engine shall not exceed 0.16 pounds per hour and 0.69 tpy.

b. Each engine shall be equipped with oxidation catalyst air pollution control device.

c. Each engine shall be equipped with air to fuel controller. The AFR controller must be maintained and operated appropriately in order to ensure proper operation of the engine and control device to minimize emissions at all times.
[40CFR§60.4243(g)]

d. Each engine shall be equipped with a non-resettable hour meter.

e. Compliance with the mass emission limits in item a of this condition is satisfied by Compiling with Condition 4.1.4. and not exceeding the following concentrations during performance testing:

i. NO_x concentration of 56.5 ppmvd at 15% O_2.

ii. CO concentration of 26.0 ppmvd at 15% O_2.

iii. VOC concentration of 33.0 ppmvd at 15% O_2

f. The permittee shall replace the rod packing in each affected compressor once every 26,000 hours of operation.
[40 CFR §60.5385(a)(1)]

4.1.3. The permittee shall only operate these engines using fuel gas except during emergency operation at which the permittee may operate them using propane for a maximum of 100 hours per year.
[40CFR§60.4243(e)]

4.1.4. Requirements for Use of Oxidization Catalysts

a. The automatic air/fuel ratio controller or closed-loop automatic feedback controller shall provide a warning or indication to the operator and/or be interlocked with the engine ignition system to cease engine operation in case of a masking, poisoning or overrich air/fuel ratio situation which results in performance degradation or failure of the catalyst element;

d. The permittee shall check the air/fuel ratio every 1,500 service hours and adjust in accordance to the manufacturer's specifications. The permittee shall maintain these records for five (5) years. The permittee shall monitor the temperature to the inlet of the catalyst and in accordance with manufacturer's specifications a high temperature alarm shall shut off the

engine before thermal deactivation of the catalyst occurs. The permittee shall also inspect for thermal deactivation of the catalyst before restarting the engine;

c. No person shall knowingly:

1. Remove or render inoperative any air pollution or auxiliary air pollution control device installed subject to the requirements of this permit;

2. Install any part or component when the principal effect of the part or component is to bypass, defeat or render inoperative any air pollution control device or auxiliary air pollution control device installed subject to the requirements of this permit; or

3. Cause or allow engine exhaust gases to bypass any catalytic reduction device.

4.1.5. **Operation and Maintenance of Air Pollution Control Equipment.** The permittee shall, to the extent practicable, install, maintain, and operate all pollution control equipment listed in Section 1.0 and associated monitoring equipment in a manner consistent with safety and good air pollution control practices for minimizing emissions, or comply with any more stringent limits set forth in this permit or as set forth by any State rule, Federal regulation, or alternative control plan approved by the Secretary.
[45CSR§13-5.11.]

4.2. Monitoring Requirements

4.2.1. The permittee shall maintain a maintenance plan of conducted maintenance and must, to the extent practicable, maintain and operate the engine in a manner consistent with good air pollution control practice for minimizing emissions.
[40 CFR §60.4243(b)(2)(ii)]

4.2.2. The permittee shall monitored and record the hours of operation through the non-resettable hour meter for each engine on a monthly basis and record the number of hours the engine operated using propane. Records of such monitoring shall be maintained in accordance with Condition 3.4.1.
[40CFR§60.4245(b)]

4.3. Testing Requirements

4.3.1. The permittee must conduct performance testing on engines CM-1001, CM-1002, and CM-2001 once every 8,760 hours of operation or once every three years, whichever comes first. Such testing shall be conducted in accordance with the applicable procedures in 40 CFR §60.4244 and Condition 3.3.1. Records of such testing shall be maintained in accordance with Condition 3.4.1.
[40CFR§60.4243(b)]

4.4. Recordkeeping Requirements

4.4.1. **Record of Monitoring.** The permittee shall keep records of monitoring information that include the following:

a. The date, place as defined in this permit, and time of sampling or measurements;

b. The date(s) analyses were performed;

c. The company or entity that performed the analyses;

d. The analytical techniques or methods used;

e. The results of the analyses; and

f. The operating conditions existing at the time of sampling or measurement.

4.4.2. **Record of Maintenance of Air Pollution Control Equipment.** For all pollution control equipment listed in Section 1.0, the permittee shall maintain accurate records of all required pollution control equipment inspection and/or preventative maintenance procedures.

4.4.3. **Record of Malfunctions of Air Pollution Control Equipment.** For all air pollution control equipment listed in Section 1.0, the permittee shall maintain records of the occurrence and duration of any malfunction or operational shutdown of the air pollution control equipment during which excess emissions occur. For each such case, the following information shall be recorded:

a. The equipment involved.

b. Steps taken to minimize emissions during the event.

c. The duration of the event.

d. The estimated increase in emissions during the event.

For each such case associated with an equipment malfunction, the additional information shall also be recorded:

e. The cause of the malfunction.

f. Steps taken to correct the malfunction.

g. Any changes or modifications to equipment or procedures that would help prevent future recurrences of the malfunction.

4.4.4. For each compressor connected to Engines CM-1001, and CM1002, the permittee shall maintain records of the following in accordance with Condition 3.4.1.

i. Record the cumulative number of hours of operation since initial startup or the previous replacement of the reciprocating compressor rod packing, whichever is later

ii. Record of the date of the recent replacement of the rod packing.
[40 CFR §60.5385(c)(3)]

4.4.5. The permittee shall maintain records of the monitoring as requirement in Condition 4.1.4. for each engine in accordance with Condition 3.4.1.

4.5. Reporting Requirements

4.5.1. The permittee shall submit annual compliance reports of compliance that indicates compliance with Condition 4.1.1.f. and 40 CFR §60.5385(a)(1) from the compressors connected to Engines to the Director and Administrator in accordance with Conditions 3.5.1. and 3.5.3. The reporting period of such reports shall begin on October 15 and ends on October 14. Submission of report must be made within 90 days from the end of the reporting period. The permittee may submit one

report for multiple affected facilities under Subpart OOOO to Part 60. Such reports shall include the he following information:

i. The company name and address of the affected facility

ii. An identification of each affected facility being included in the annual report.

iii. Beginning and ending dates of the reporting period.

iv. A certification by a certifying official of truth, accuracy, and completeness. This certification shall state that, based on information and belief formed after reasonable inquiry, the statements and information in the document are true, accurate, and complete.

v. The records as required in Condition 4.4.4. for each affected compressor.

[40 CFR §60.5420(b) and (b)(4)(ii)]

5.0. Specific Requirements for Production Gas Dehydration Unit

5.1. Limitations and Standards

5.1.1. The permittee shall install, operate and maintain the production gas dehydration unit in accordance with the following requirements:

a. For the purposes of limiting emissions of benzene from the still vent of the regenerator to less than 1.0 ton per year, the permittee shall limit throughput of gas through the unit as stated in item b of this condition and route the still vent into a closed vent system to a control device.

b. The maximum amount of wet natural gas processed through the dehydration unit shall not exceed 120 MMscf per day. Compliance with this limit shall be determined using the daily throughput average on a monthly basis.

c. The flash tank off gas of the dehydration unit shall either be routed into closed vent system to the pilot light and burner of the reboiler as fuel gas or recycled for recompression while the dehydration unit is in operation.

d. Vapors from the regenerator still vent shall be vented into a closed vent system which is routed to a control device that is identified as Dehy Flare. Such control vent system shall be maintained in such a manner to be free of leaks. A leaking component is defined as a measured instrument reading greater than 500 ppm above background or by visual inspection. Monitor of the closed vent system shall be conducted in accordance with Condition 8.2.2
[40 CFR §60.5400(a), §60.482-11a(g)]

5.1.2. The permittee shall operate and maintain the reboiler for the dehydration unit in accordance with the following emission limitations and operating parameters.

a. Emissions of VOC from the emission point RB-001shall not exceed 0.66 pounds per hour. Annual VOC emissions shall not exceed 2.89 tons per year on a 12-month rolling total.

b. Total hazardous air pollutants (HAPs), which include BTEX, from the emission point RB-001shall not exceed 0.02 pounds per hour. Annual Total HAP emissions from the RB-001shall not exceed 0.1 tons per year on a 12-month rolling total.

c. Sulfur dioxide emissions from RB-001 shall not exceed 0.19 pounds per hour. Compliance with this emission limit is satisfied by limiting the hydrogen sulfide (H_2S) loading of the incoming natural gas to the facility to be no greater than 4.0 grains of H2S per 100 cubic feet of natural gas or 65 ppm of H_2S by volume.
[45 CSR §10-5.1.]

d. The permittee shall operate and maintain the reboiler in a manner to minimize emissions. Such operation of the flare shall constitute the following:

i. The pilot light for the reboiler shall be lit at all times when glycol is circulating in the dehydration unit. The fuel source for the pilot light shall be the flash tank off gas of the dehydrator or residue gas.

ii. Visible emissions from emission point RB-001shall not exceed 10% opacity on a 6-minute block average. Compliance with this requirement is satisfied by complying with the fuel type restriction in Condition 4.1.3.c.iii.
[45 CSR §2-3.1]

iii. The reboiler shall only be fueled with fuel gas that meets the requirements of Condition 3.1.7., flash tank off gas, or any combination of these two fuels.

5.1.3. The Dehy flare shall be designed and operated in accordance with the following:

a. The flare shall be a non-assisted flare.

b. The flare shall be designed for and operated with no visible emissions, except for periods not to exceed a total of 5 minutes during any 2 consecutive hours.
[45 CSR §6-4.3]

c. The flare shall be operated, with a flame present at all times whenever emissions may be vented to them, except during SSM (Startup, Shutdown, Malfunctions) events of the control device.

d. The net heating value of the effluent going to the flare shall be 7.45 MJ/scm (300 Btu/scf) or greater.

e. The flare tip exit velocity shall not exceed 60 feet per second.

f. The total emissions from the flare shall not exceed following limits:

i. Emissions of NO_x shall not exceed 0.44 pounds per hour and 1.96 tpy.

ii. Emissions of CO shall not exceed 3.85 pounds per hour and 16.85 tpy.

iii. Emissions of VOC shall not exceed 2.02 pounds per hour and 8.84 tpy.

iv. Emissions of SO_2 shall not exceed 0.19 pounds per hour. Compliance with this emission limit is satisfied by limiting the hydrogen sulfide (H2S) loading of the incoming natural gas to the dehydration unit to be no greater than 4.0 grains of H2S per 100 cubic feet of natural gas or 65 ppm of H2S by volume.
[45 CSR §10-5.1.]

v. Total HAPs shall not exceed 0.33 pounds per hour and 1.47 tpy.

5.1.4. **Operation and Maintenance of Air Pollution Control Equipment.** The permittee shall, to the extent practicable, install, maintain, and operate all pollution control equipment listed in Section 1.0 and associated monitoring equipment in a manner consistent with safety and good air pollution control practices for minimizing emissions, or comply with any more stringent limits set forth in this permit or as set forth by any State rule, Federal regulation, or alternative control plan approved by the Secretary.
[45CSR§13-5.11.]

5.2. Monitoring Requirements

5.2.1. The permittee shall monitor and record the following parameters for the purpose of demonstrating compliance with Conditions 5.1.1., and 5.1.3.:

a. The throughput of wet natural gas processed through the dehydration unit on a daily basis, days the dehydration unit operated, and annual natural gas flowrate.
[40 CFR §63.774(d)(1)]

b. Determine actual annual average natural gas throughput (in terms of natural gas flowrate to the glycol dehydration unit per day) by converting the annual natural gas flowrate to a daily average by dividing the annual flowrate by the number of days per year the glycol dehydration unit processed natural gas.
[40 CFR §63.772(b)(1)(i)]

c. Identify any periods there was no flame present for the pilot of the flare when the dehydration unit was in operation.

d. Determination of the actual average benzene emissions from the dehydration unit shall be made using the model GRIGLYCalc™, Version 3.0 or higher, and the procedures presented in the associated GRI-GLYCalc™ Technical Reference Manual. Inputs to the model shall be representative of actual operating conditions of the glycol dehydration unit and may be determined using the procedures documented in the Gas Research Institute (GRI) report entitled "Atmospheric Rich/Lean Method for Determining Glycol Dehydrator Emissions" (GRI-95/0368.1).
[40 CFR §63.772(b)(2)(i) & 63.774(d)(1)(ii)]

e. Records of such monitoring shall be maintained in accordance with Condition 3.4.1.

5.2.2. For the purpose of demonstrating proper operation of the Dehy Flare as stated in Condition 5.1.3.b., the permittee shall conduct a visible emission observation using Section 11 of Method 22 for one hour once every calendar quarter in which flare was in service. If during the first 30 minutes of the observation there were no visible emission observed, the permittee may stop the observation.

If at the end of the observation and visible emission were observed for more than 2 minutes, then the permittee shall follow manufacture's repair instruction, if available or best combustion engineering practice as outline in the unit inspection and maintenance plan. To return the flare to compliant operation, the permittee shall repeat the visible emission observation. Records of such monitoring and repair activities shall be maintained in accordance with Condition 3.4.1.

5.3. Testing Requirements

5.3.1. In order to demonstrate compliance with the flare opacity requirements of 5.1.3.b., the permittee shall conduct a Method 22 opacity test for at least two hours within 180 days after issuance of this permit. This test shall demonstrate no visible emissions are observed for more than a total of 5 minutes during any 2 consecutive hour period using 40CFR60 Appendix A Method 22. The permittee shall conduct this test within one (1) year of permit issuance or initial startup whichever is later. The visible emission checks shall determine the presence or absence of visible emissions. At a minimum, the observer must be trained and knowledgeable regarding the effects of background contrast, ambient lighting, observer position relative to lighting, wind, and the presence of uncombined water (condensing water vapor) on the visibility of emissions. This training may be obtained from written materials found in the References 1 and 2 from 40 CFR Part 60, appendix A, Method 22 or from the lecture portion of 40 CFR part 60, appendix A, Method 9 certification course. Such testing shall be conducted in accordance with Condition 3.3.1.

5.4. Recordkeeping Requirements

5.4.1. **Record of Maintenance of Air Pollution Control Equipment.** For all pollution control equipment listed in Section 1.0, the permittee shall maintain accurate records of all required pollution control equipment inspection and/or preventative maintenance procedures.

5.4.2. **Record of Malfunctions of Air Pollution Control Equipment.** For all air pollution control equipment listed in Section 1.0, the permittee shall maintain records of the occurrence and

duration of any malfunction or operational shutdown of the air pollution control equipment during which excess emissions occur. For each such case, the following information shall be recorded:

a. The equipment involved.

b. Steps taken to minimize emissions during the event.

c. The duration of the event.

d. The estimated increase in emissions during the event.

For each such case associated with an equipment malfunction, the additional information shall also be recorded:

e. The cause of the malfunction.

f. Steps taken to correct the malfunction.

g. Any changes or modifications to equipment or procedures that would help prevent future recurrences of the malfunction.

5.4.3. The permittee shall maintain records of the analysis that is used to indicate compliance is in accordance with items a. and b. of Conditions 4.1.1. Such records shall include the source of data used in the analysis and be maintained in accordance with Condition 3.4.1.
[40 CFR 63.774(d)(2)(ii)]

6.0. Specific Requirements Process Heaters

6.1. Limitations and Standards

6.1.1. Maximum Design Heat Input. The maximum design heat input (MDHI) for each of the heaters shall not exceed the following:

Table 6.1.1. – List Heaters

Emission Unit ID#	Heater Description	MDHI (MMBTU/hr)	Annual Heat Input (MMBtu/yr)
H-711	Mole Sieve Regeneration Heater[1]	7.86	68,853.60
H-2711	Mole Sieve Regeneration Heater[1]	7.86	68,853.60
H-3711	Mole Sieve Regeneration Heater[1]	7.86	68,853.60
H-771	Hot Oil Heater	28.25	247,470.00
H-4711	Mole Sieve Regeneration Heater[2]	18.00	157,680.00
H-5711	Mole Sieve Regeneration Heater[2]	18.00	157,680.00
H-6711	Mole Sieve Regeneration Heater[2]	18.00	157,680.00
H-7711	Mole Sieve Regeneration Heater[2]	18.00	157,680.00
H-8711	Mole Sieve Regeneration Heater[2]	18.00	157,680.00
H-9711	Mole Sieve Regeneration Heater[2]	18.00	157,680.00
H-6712	Hot Oil Heater	6.60	57,816.00
H-4712	Hot Oil Heater	6.60	57,816.00
H-8712	Hot Oil Heater	6.60	57,816.00
H-742	Stabilization Heater	2.28	19,972.80
H-2742	Stabilization Heater	2.28	19,972.80
H-3742	Stabilization Heater	2.28	19,972.80
D1-H-782	DeEthanizer HMO Heater[3]	113.36	993,033.60
D1-H-741	DeEthanizer Regen Heater[2]	12.23	107,134.80
Total Maximum Design Heat Input		312.06	2,733,645.60

1 - Denotes the heater is a process heater per 45 CSR §2-26.
2 - Denotes the heater is a process heater per 45 CSR §2-26 and 40 CFR §60.41c.
3 - Denotes the unit is a process heater per 45 CSR §2-26 and 40 CFR §60.41c and 40 CFR §60.41b.

6.1.2. The following heaters shall not exhibit visible emissions greater than 10 percent opacity on a six minute block average: H-742, H-771, H-2742, H-3742, H-4712, H-6712 and H-8712. **[45CSR§2-3.1.]**

6.1.3. The permittee shall not exceed the following limits of annual emissions from combined heaters listed in Table 6.1.1.

a. Emissions of NOx shall not exceed 51.5 tpy.

b. Emissions of CO shall not exceed 62.4 tpy.

c. Emissions of VOCs shall not exceed 23.3 tpy.

Compliance with these emissions limits shall be satisfied by complying with Conditions 6.1.4., 6.1.5., and 6.1.6.

6.1.4. All of the fuel burning units listed in Table 6.1.1. shall be limited to using residue gas that complies with the requirements of Condition 3.1.7. Complying with this condition satisfy

compliance with Condition 6.1.2. the use of residue gas in these emission units satisfies compliance with the limitations of 45CSR§2-3.1., 45CSR§2-4.1.b., and 45CSR§10-3.1.e. **[45CSR§2A-3.1.a., 45CSR§10-10.3., and 45CSR§10A-3.1.b.]**

6.1.5. The permittee shall conduct tune-up of all of the heaters that are listed in Table 6.1.1. that have a MDHI of 5.0 MMBtu/hr or greater once every three years in accordance with the following:

a. As applicable, inspect the burner, and clean or replace any components of the burner as necessary (permittee may delay the burner inspection until the next scheduled unit shutdown). At units where entry into a piece of process equipment or into a storage vessel is required to complete the tune-up inspections, inspections are required only during planned entries into the storage vessel or process equipment;

b. Inspect the flame pattern, as applicable, and adjust the burner as necessary to optimize the flame pattern. The adjustment should be consistent with the manufacturer's specifications, if available;

c. Inspect the system controlling the air-to-fuel ratio, as applicable, and ensure that it is correctly calibrated and functioning properly (you may delay the inspection until the next scheduled unit shutdown);

d. Optimize total emissions of CO to a concentration not to exceed 50 ppm. This optimization should be consistent with the manufacturer's specifications, which includes the manufacturer's NOx concentration specification of not to exceed 30 ppm, expect for Heaters H-6712 H-4712, H-8712, which is not exceed a NO_x concentration of 33 ppm.

e. Measure the concentrations in the effluent stream of NO_x and CO in parts per million, by volume, and oxygen in volume percent, before and after the adjustments are made (measurements may be either on a dry or wet basis, as long as it is the same basis before and after the adjustments are made). Measurements may be taken using a portable CO analyzer.

6.1.6. The annual heat input of each heater listed in Table 6.1.1. shall not exceed the value as listed in the table for the corresponding heater. Compliance with this limit shall be conducted on 12 month rolling total.

6.2. Monitoring Requirements

6.2.1. For each month, the permittee shall record the hours of operation and amount of natural gas consumed by heaters listed in Table 6.1.1., and shall calculate the rolling yearly total of total heat input from the heaters. The permittee may record the total amount of natural gas consume by the heaters and other emission units on a combined basis. For other emission units not listed but fuel usage include on the fuel meter, the permittee shall monitor the hour of operation of these sources to account for their fuel usage as well. Such records shall be maintained in accordance with Condition 3.4.1. of this permit.
[40 CFR §60.48c(g)(2) and 45CSR§2A-7.1.a.1.]

6.3. Testing Requirements

[Reserved]

6.4. Recordkeeping Requirements

6.4.1. The permittee shall keep the following records in accordance Condition 3.4.1.. This includes but is not limited to the following information during the tune-up as required in Condition 6.1.5.:

a. The concentrations of CO and NO_x in the effluent stream in parts per million by volume, and oxygen in volume percent, measured at high fire or typical operating load, before and after the tune-up of the boiler or process heater; and

b. A description of any corrective actions taken as a part of the tune-up.

6.5. Reporting Requirements

[Reserved]

7.0. Specific Requirements for the Storage Tanks

7.1. Limitations and Standards

7.1.1. Combine total VOC emission from the storage tanks (5 Storage Tanks (1-500 bbl gunbarrel tank, 4-400 bbl condensate/water tanks)) shall not exceed 9.6 tpy. Compliance with this limit shall be satisfied by compliance with Condition 7.1.2.

7.1.2. The permittee shall installed and operating prior to start-up of the storage tanks (5 Storage Tanks (1-500 bbl gunbarrel tank, 4-400 bbl condensate/water tanks)) a vapor recovery unit (VRU) system while the any of the respective vessels are service, which include vessels that are empty but not degassed, and recompress the vapors back into a pipeline segment. Such VRU system, which includes the closed vent system and storage vessels, shall meet the following requirements:

a. The cover and all openings on the cover (e.g., access hatches, sampling ports, pressure relief valves and gauge wells) shall form a continuous impermeable barrier over the entire surface area of the liquid in the storage vessel or wet seal fluid degassing system.

b. Each cover opening shall be secured in a closed, sealed position (e.g., covered by a gasketed lid or cap) whenever material is in the unit on which the cover is installed except during those times when it is necessary to use an opening as follows:

i. To add material to, or remove material from the unit (this includes openings necessary to equalize or balance the internal pressure of the unit following changes in the level of the material in the unit);

ii. To inspect or sample the material in the unit;

iii. To inspect, maintain, repair, or replace equipment located inside the unit; or

iv. To vent liquids, gases, or fumes from the unit through a closed-vent system designed and operated in

v. accordance with the requirements of paragraph (a) or (c) of this section to a control device or to a process.

c. Each storage vessel thief hatch shall be equipped, maintained and operated with a weighted mechanism or equivalent, to ensure that the lid remains properly seated. The permittee must select gasket material for the hatch based on composition of the fluid in the storage vessel and weather conditions.

d. The closed vent system shall be design to route all gases, vapors, and fumes emitted from the material in the storage vessels to a control device that meets the requirements specified in §60.5412(c) and (d), or to a process.

e. The permittee must design and operate a closed vent system with no detectable emissions, as determined using olfactory, visual and auditory inspections. Each closed vent system that routes emissions to a process must be operational 98 percent of the year or greater. Such system shall meet the requirements of Condition 8.1.2.

f. The permittee must meet the requirements specified in paragraphs (c)(3)(i) and (ii) of this section if the closed vent system contains one or more bypass devices that could be used to divert all or a portion of the gases, vapors, or fumes from entering the control device or to a process.

g. The permittee must properly install, calibrate, maintain, and operate a flow indicator at the inlet to the bypass device that could divert the stream away from the control device or process to the atmosphere that sounds an alarm, or, initiates notification via remote alarm to the nearest field office, when the bypass device is open such that the stream is being, or could be, diverted away from the control device or process to the atmosphere.

h. The permittee must secure the bypass device valve installed at the inlet to the bypass device in the non-diverting position using a car-seal or a lock-and-key type configuration.

i. Low leg drains, high point bleeds, analyzer vents, open-ended valves or lines, and safety devices are not subject to the requirements of paragraph (c)(3)(i) of this section.

7.2. Monitoring Requirements

7.2.1. The permittee shall monitor any by-pass device of the closed vent system by install a continuous monitoring system that indicates opening a by-pass device and records date and length of time the device was open. Such records shall be maintained in accordance with Condition 3.4.1.

7.2.2. The permittee shall monitor and record monthly and rolling twelve month total of liquid throughput during truck loading operations.

~~7.2.3. For the purposes of determining compliance with Section 7.1.2.e., the permittee shall conduct monitoring to show compliance with the closed vent system requirement of the storage tanks (5 Storage Tanks (1 500 bbl gunbarrel tank, 4 400 bbl condensate/water tanks)). The monitoring shall be conducted initially within 60 days after achieving the maximum production rate at which the facility will be operated or within 180 days of start up, whichever is earlier. Monitoring will be conducted once every calendar year thereafter per the requirements of §60.482 10.~~

~~a. The vapor recovery system will be operated and monitored in compliance with §60.482 10(b), (f) through (m), and §60.485.~~

~~b. Records of the vapor recovery system will be maintained according to the requirements of §60.486, §60.635(b) and Condition 3.4.1.~~

7.3. Testing Requirements

[Reserved]

7.4. Recordkeeping Requirements

7.4.1. The permittee shall maintain record of the amount of liquid unloaded from the vessels on a monthly basis. Such records shall be maintained in accordance with Condition 3.4.1.

7.4.2. The vapor recovery system will comply with the recordkeeping requirements of §60.486 and §60.635(b). Such records shall be maintained in accordance with Condition 3.4.1.

7.5. Reporting Requirements

~~7.5.1. The permittee shall submit a written report of the results of testing required in 7.2.1 of this permit before the close of business on the 60th day following the completion of such testing to the Director. Such report(s) shall include all records of the control device performance parameters taken during such testing, whichever is appropriate for the required report.~~

8.0. Specific Requirements Gas Processing Units & LDAR Program

8.1. Limitations and Standards

8.1.1. All group of equipment located within Sherwood I though IX Gas Processing Units, TEG Dehydration Unit, wet gas compressors, and any other unit(s) that is in VOC service (i.e. NGL) are subject to the following expect for compressors and components only in residue gas service:

a. Each pneumatic controller at the facility must have a bleed rate of zero. Compliance with this required shall be satisfied by using only compressed air driven pneumatic controllers at the at the facility. Each pneumatic controller shall be tagged with the month and year of installation and identification information that allows traceability to the records for that pneumatic controller as required in Condition 8.4.4.
[40 CFR §60.5390(b)(1) & (b)(2)]

b. Each pressure relief device (PRD) in gas/vapor service shall be monitored quarterly and within 30 days after each pressure release to detect leaks by the methods specified in 40 CFR §60.485a(b) unless the PRD meets the criteria of sub item v. of this item.

i. If an instrument reading of 500 ppm or greater is measured, a leak is detected.

ii. When a leak is detected, it must be repaired as soon as practicable, but no later than 15 calendar days after it is detected, except as provided in 40 CFR §60.482-9a.

iii. A first attempt at repair must be made no later than 5 calendar days after each leak is detected.

iv. No pressure relief device shall not be operated for more than 30 days after a pressure release without being monitored for a leak.

v. Each pressure relief device in VOC gas/vapor service located at the facility that is piped into a close vent system and routed to a control device in accordance with Condition is exempt from the requirements of this item.

[40 CFR §§60.5401(b)(1) though (b)(4)]

c. All pumps in light liquid service, valves in gas/vapor or light liquid service, and connectors in gas/vapor or light liquid service shall not exhibit leaks as defined in the following.
[40 CFR §60.5400(a), §§60.482-2a, 7a, and 11a]

i. A leak for pumps in light liquid service is defined as a measured instrument reading of 2,000 ppm or greater using Method 21 or any visible emission that may otherwise be invisible to the naked eye using an optical gas imaging instrument (OGII).
[40 CFR §60.482-2a(b)(1) and §60.18(g)(3)]

ii. A leak for valves in gas/vapor or light liquid service is defined as a measured instrument reading of 500 ppm or greater using Method 21 or any visible emission that may otherwise be invisible to the naked eye using an OGII.
[40 CFR §60.482-7a(b) and §60.18(g)(3)]

iii. A leak for connector in gas/vapor or light liquid service is defined as a measured instrument reading of 500 ppm or greater using Method 21 or any visible emission that may otherwise be invisible to the naked eye using an OGII.
[40 CFR §60. 482-11a(b)(2) and §60.18(g)(3)]

d. Sampling connection systems are exempt from the requirements of §60.482-5a.
[40 CFR §60.5402(c)]

e. Each open-ended value or line shall be equipped with a cap, blind flange, plug, or a second valve expect as noted in Sub-items iii and iv of this item.

i. The cap, blind flange, plug, or second valve shall seal the open end at all times except during operation requiring process fluid flow through the open-ended valve or line.

ii. Each open-ended line equipped with a second valve shall be operated in a manner such that the valve on the process fluid end is closed before the second valve is closed.

iii. When a double block-and-bleed system is being used, the bleed valve or line may remain open during operations that require venting the line between the block valves but shall comply with item e of this condition at all other times.

iv. Open-ended valves or lines in an emergency shutdown system which are designed to open automatically in the event of a process upset are exempt from the requirements of the above sub-items of item e of this condition.
[40 CFR §60.5400(a), §§60.482-6a]

f. Any leaking component must be repaired as soon as practicable, but no later 15 calendar days after it is detected, expect as provided in item h of this condition (40 CFR §60.482-9a).

i. A first attempt at repair must be made no later than 5 calendar days after each leak is detected.

g. Delay of repair (DOR) of equipment for which leaks have been detected will be allowed if repair within 15 days is technically infeasible without a process shutdown. Repair of this equipment shall occur before the end of the next process unit shutdown. Monitoring to verify the repair must occur within 15 days after startup of the process unit.
[40 CFR §60.5400(a), §§60.482-9a(a)]

h. Delay of repair (DOR) of equipment will be allowed for equipment which is isolated from the process and which does not remain in VOC service.
[40 CFR §60.5400(a), §§60.482-9a(b)]

i. Delay of repair for valves and connectors will be allowed if:

i. The permittee demonstrates that the emissions of purged material resulting from immediate repair are greater than the fugitive emissions likely in result from the delay of repair; and

ii. When repair procedures are effected, the purged material is collected and destroyed or recovered in a control device complying with the requirements of Condition 8.1.X (40 CFR §60.482-10a).
[40 CFR §60.5400(a), §§60.482-9a(b)]

j. Delay of repair beyond a process unit shutdown is allowed for a valve, if valve assembly replacement is necessary during the process unit shutdown, valve assembly supplies have been depleted, and valve assembly supplies have been sufficiently stocked before the supplies were depleted. Delay of repair beyond the next process unit shutdown will not be allowed unless the next process unit shutdown occurs sooner than 6 months after the first process unit shutdown.

k. When delay of repair is allowed for a leaking pump, valve, or connector that remains in service, the pump, valve or connector may be consider to be repaired and no longer subject to delay of repair requirements if two consecutive monthly monitoring instrument readings are below the leak definition.

8.1.2. All pressure relief devices in VOC service at the facility shall be vented to a closed vent system and control device (Flare FL-991) in accordance with the following requirements:

a. The closed vent system shall be constructed of hard piping;
[40 CFR §60.5400(a), §60.482-11a(f)(1)]

b. The closed vent system shall be free of leaks. A leaking component is defined as a measured instrument reading greater than 500 ppm above background or by visual inspection.
[40 CFR §60.5400(a), §60.482-11a(g)]

c. Detected leaks shall be repair as practicable with the first at repair attempt shall be made within 5 days calendar after detecting the leak. Repair shall be completed no later than 15 calendar days after the leak is detected.
[40 CFR §60.5400(a), §§60.482-11a(g)(1) & (g)(2)]

d. Delay of repair (DOR) the closed vent system for which leaks have been detected is allowed if the repair is technically infeasible without a process shutdown or if the permittee determines that emissions resulting from the immediate repair would be greater than the fugitive emissions likely to result from DOR. Repair of such equipment shall be complete by the end of the next process shutdown.
[40 CFR §60.5400(a), §60.482-11a(h)]

e. If the permittee determine any parts of the closed vent system as unsafe to monitor by exposing the monitoring personnel to an imminent or potential danger. The permittee shall develop and implement a plan that allows for the monitoring of such components during safe-to-inspect times.

f. Any parts of the closed vent system that are designated, as described in 40 CFR §60.482-10a(l)(2), as difficult to inspect are exempt from the inspection requirements of Condition 8.2.2. if the permittee complies with the requirements specified in the following:

i. The permittee determines that the equipment cannot be inspected without elevating the inspecting personnel more than 2 meters above a support surface;

ii. The process unit within which the closed vent system is located becomes an affected facility through §§60.14 or 60.15, or the permittee designates less than 3.0 percent of the total number of closed vent system equipment as difficult to inspect; and

iii. The permittee shall develop a written plan that requires inspection of difficult to inspect equipment at least once every 5 years.

g. Closed vent systems and control devices used to comply with provisions of Subpart OOOO to Part 60 shall be operated at all times when emissions may be vented to them.
[40 CFR §60.482-10a & §60.54009a)]

8.1.3. Flare FL-991shall be designed and operated in accordance with the following:

a. The main flare shall be an air-assisted flare with a piggy-back as a non-assisted flare.
[40 CFR §60.18(c)(6) & §60.482-10a(d)]

b. Both flares shall be designed for and operated with no visible emissions, except for periods not to exceed a total of 5 minutes during any 2 consecutive hours.
[40 CFR §60.18(c)(1)]

c. The both flares shall be operated with a flame present at all times whenever emissions may be vented to them.
[40 CFR §60.18(c)(2)]

d. The net heating value of the effluent going to the flare shall be 1,000 Btu per scf or greater.
[40 CFR §§60.18(c)(3)(ii) & (c)(4)(ii)]

e. The main flare tip exit velocity shall not exceed 253.5 feet per second.
[40 CFR §60.18(c)(5)]

f. The piggy-back flare tip exit velocity shall not fall below 60 feet per second and not exceed 144 feet per second.
[40 CFR §60.18(c)(4)(ii)]

g. The maximum flow rate to the flare system shall not exceed 1.674 MMscf per hour and 50.82 MMscf per year.

h. The total emissions from the flare shall not exceed following limits:

i. Emissions of NOx shall not exceed 600.45 pounds per hour and 8.01 tpy.

ii. Emissions of CO shall not exceed 1,198.74 pounds per hour and 16.00 tpy.

iii. a. Emissions of VOC shall not exceed 4,000 pounds per hour and 48.00 tpy.

iv. Total HAPs shall not exceed 0.33 pounds per hour and 1.47 tpy.

8.1.4. **Operation and Maintenance of Air Pollution Control Equipment.** The permittee shall, to the extent practicable, install, maintain, and operate all pollution control equipment listed in Section 1.0 and associated monitoring equipment in a manner consistent with safety and good air pollution control practices for minimizing emissions, or comply with any more stringent limits set forth in this permit or as set forth by any State rule, Federal regulation, or alternative control plan approved by the Secretary.
[45CSR§13-5.11.]

8.2. Monitoring Requirements

8.2.1. For the purpose of demonstration continuous compliance with the emission requirements of Condition 8.1.1.e., the permittee shall conduct leak detection monitoring of all affected components at the facility in accordance with the following:

a. Each pump in light liquid service shall be checked by visual inspection each calendar week for indication of liquids dripping from the pump seal. Designate the visual indications of liquids dripping as a leak, and repair the leak using either the procedures in 40 CFR §60.482-2a(c) or by eliminating the visual indications of liquids dripping.
[40 CFR §60.482-2a(a)(2)]

b. Each pump and valve shall be monitored monthly to detect leaks by the methods specified in 40 CFR §60.485a(b).
[40 CFR §60.482-2a(a)(1) & §60.482-7a(a)(1)]

c. Each connector shall be monitored shall be monitored in accordance to the frequency prescribed in 40 CFR §60.482-11a(b)(3) to detect leaks by the methods specified in 40 CFR §60.485a(b). Connectors on new process units (i.e. Sherwood VII, VIII, & IX) shall be monitoring in accordance with frequency stipulated in this item 12 months after startup of the affect process unit.

d. Each connector of an new process unit (i.e. Sherwood VII, VIII, & IX) at the facility shall be monitored within the initial 12 months after start-up of the process unit to detect leaks by methods specified in 40 CFR §60.485a(b).

e. The permittee may use the Alternative Work Practice (AWP) for monitoring equipment for leaks in lieu of the methods specified in 40 CFR §60.485a(b) (Method 21) as outline in 40 CFR §§60.18(g), (h), and (i) (OGII). If the permittee elects to use the AWP, then the following items are in effect:

i. The frequency of monitoring for all affected components shall be bi-monthly or one of the other monitoring frequencies listed in Table 1 to Subpart A of Part 60.

ii. The detection sensitivity level shall be 60 grams per hour or that corresponds to the selected monitoring frequency in Table 1 to Subpart A of Part 60.

iii. The selected OGII must provide the operator with an image of the potential leak points for each piece of equipment at both the detection sensitivity level and within the distance used in the daily instrument check described in 40 CFR §60.18(i)(2) of this section. The detection sensitivity level depends upon the frequency at which leak monitoring is to be performed. The OGII must provide a date and time stamp for video records of every monitoring event.

iv. If the AWP is used to identify leaks, re-screening after an attempted repair of leaking equipment must be conducted using either AWP or the 40 CFR part 60, appendix A-7, Method 21 monitor at the leak definition required in the applicable subpart to which the equipment is subject.

v. The AWP shall not be used for equipment being monitored:

1. Skip period leak detection and repair;

2. Quality improvement plans; or

3. Complying with standards for allowable percentage of valves and pumps to leak.

vi. All components shall be monitored annually using a 40 CFR part 60, appendix A-7, Method 21 monitor at the leak definition required in Condition 8.1.1.c. The permittee may choose the specific monitoring period (for example, first quarter) to conduct the annual monitoring. Subsequent monitoring must be conducted every 12 months from the initial period. The permittee must keep records of the annual Method 21 screening results, as specified in 40 CFR §60.18(i)(4)(vii).

f. Records of such monitoring shall be maintained in accordance with Section 8.4.and Condition 3.4.1.

[40 CFR §60.18(a)(2), §§60.18(g) though (i), §60.485a(b), §60.5410(f)]

8.2.2. For the purposed of demonstrating compliance with the requirements of the closed vent system in Conditions 7.1.2.e. and 8.1.2., the permittee shall conduct the following:

a. Conduct an initial inspection according to the procedures in 40 CFR §60.485a(b) (Method 21).

b. Conduct annual visual inspections for visible, audible, or olfactory indicators of leaks. The permittee may use an OGII if the distance to targeted components is within the distance used in the daily instrument check described in 40 CFR §60.18(i)(2) to satisfy the annual visual inspection requirement.

c. Detected leaks shall be repaired in accordance timing stated in Condition 8.1.2.

d. Records of such inspections shall be maintained in accordance with 8.4.6.
[40 CFR §60.482-10a(f)1) & §60.5400(a)]

8.2.3. The permittee shall monitor and recorded the volumetric amount of effluent, which includes the purge gas, routed to Flare FL-991. Such records shall be maintained in accordance with Condition 3.4.1.

8.2.4. In order to demonstrate compliance with the requirements of 8.1.4.c, the permittee shall monitor the presence or absence of a flare pilot flame using a thermocouple or any other equivalent device.
[40 CFR §60.18(f)(2)]

8.2.5. For the purpose of demonstrating proper operation of the flare (FL-991), the permittee shall conduct a visible emission observation using Section 11 of Method 22 for one hour once every calendar quarter. If during the first 30 minutes of the observation there were no visible emission observed, the permittee may stop the observation.

If at the end of the observation and visible emission were observed for more than 2.5 minutes, then the permittee shall follow manufacture's repair instruction, if available or best combustion engineering practice as outline in the unit inspection and maintenance plan. To return the flare to compliant operation, the permittee shall repeat the visible emission observation. Records of such monitoring and repair activities shall be maintained in accordance with Condition 3.4.1.

8.3. Testing Requirements

8.3.1. In order to demonstrate compliance with the flare opacity requirements of 8.1.4.b the permittee shall conduct a Method 22 opacity test for at least two hours. This test shall demonstrate no visible emissions are observed for more than a total of 5 minutes during any 2 consecutive hour period using 40CFR60 Appendix A Method 22. The permittee shall conduct this test within 180 days after initial startup. The visible emission checks shall determine the presence or absence of visible emissions. At a minimum, the observer must be trained and knowledgeable regarding the effects of background contrast, ambient lighting, observer position relative to lighting, wind, and the presence of uncombined water (condensing water vapor) on the visibility of emissions. This training may be obtained from written materials found in the References 1 and 2 from 40 CFR part 60, appendix A, Method 22 or from the lecture portion of 40 CFR part 60, appendix A, Method 9 certification course.
[40 CFR §60.18(f)(1)]

8.4. Recordkeeping Requirements

8.4.1. **Record of Monitoring.** The permittee shall keep records of monitoring information that include the following:

a. The date, place as defined in this permit, and time of sampling or measurements;

b. The date(s) analyses were performed;

c. The company or entity that performed the analyses;

d. The analytical techniques or methods used;

e. The results of the analyses; and

f. The operating conditions existing at the time of sampling or measurement.

8.4.2. **Record of Maintenance of Air Pollution Control Equipment.** For all pollution control equipment listed in Section 1.0, the permittee shall maintain accurate records of all required pollution control equipment inspection and/or preventative maintenance procedures.

8.4.3. **Record of Malfunctions of Air Pollution Control Equipment.** For all air pollution control equipment listed in Section 1.0, the permittee shall maintain records of the occurrence and duration of any malfunction or operational shutdown of the air pollution control equipment during which excess emissions occur. For each such case, the following information shall be recorded:

a. The equipment involved.

b. Steps taken to minimize emissions during the event.

c. The duration of the event.

d. The estimated increase in emissions during the event.

For each such case associated with an equipment malfunction, the additional information shall also be recorded:

e. The cause of the malfunction.

f. Steps taken to correct the malfunction.

g. Any changes or modifications to equipment or procedures that would help prevent future recurrences of the malfunction.

8.4.4. The permittee shall record the information specified in the following for each monitoring event required in Conditions 8.2.1. and 8.2.2.

a. Monitoring instrument identification.

b. Operator identification.

c. Equipment identification.

d. Date of monitoring.

e. Instrument reading.
[40 CFR §60.486a(a)(3) & §60.5421]

8.4.5. The permittee shall record and maintain such records in accordance with Condition 3.4.1 for the following information as for the equipment of the closed vent system in Condition 8.1.2.

a. Identification of all parts of the closed vent system that are designated as unsafe to inspect, an explanation of why the equipment is unsafe to inspect, and the plan for inspecting the equipment.

b. Identification of all parts of the closed vent system that are designated as difficult to inspect, an explanation of why the equipment is difficult to inspect, and the plan for inspecting the equipment.

c. For each inspection during which a leak is detected, a record of the information specified in §60.486a(c).

d. For each inspection conducted in accordance with Condition 8.2.2. during which no leaks are detected, a record that the inspection was performed, the date of the inspection, and a statement that no leaks were detected.

e. For each visual inspection conducted as required in Condition 8.2.2. during which no leaks are detected, a record that the inspection was performed, the date of the inspection, and a statement that no leaks were detected.

f. The following information pertaining to the design requirements for closed vent systems and control devices described in Conditions 8.1.2. and 8.1.3. shall be recorded and kept in a readily accessible location:

i. Detailed schematics, design specifications, and piping and instrumentation diagrams.

ii. The dates and descriptions of any changes in the design specifications.

iii. Periods when the closed vent system and flare required in Conditions 8.1.2. and 8.1.3. are not operated as designed, including periods when a flare pilot light does not have a flame.

iv. Dates of startups and shutdowns of the closed vent systems and control devices.
[40 CFR §60.482-10a(l), §60.486a(d), §60.5400(a), & §60.5421(a)]

8.4.6. The permittee shall record the following for when each leak is detected as specified in Condition 8.1.1.c.

a. A weatherproof and readily visible identification, marked with the equipment identification number, shall be attached to the leaking equipment.

b. The identification on a valve may be removed after it has been monitored for 2 successive months as specified in 40 CFR §60.482-7a(c) and no leak has been detected during those 2 months.

c. The identification on equipment, except on a valve or connector, may be removed after it has been repaired.
[40 CFR §60.486a(b) & §60.5421]

8.4.7. The permittee shall record the following information for when each leak is detected as specified in Condition 8.1.1.c. in a log and shall be kept for 2 years in a readily accessible location:

a. The instrument and operator identification numbers and the equipment identification number, except when indications of liquids dripping from a pump are designated as a leak.

b. The date the leak was detected and the dates of each attempt to repair the leak.

c. Repair methods applied in each attempt to repair the leak.

d. Maximum instrument reading measured by Method 21 of appendix A-7 of this part at the time the leak is successfully repaired or determined to be non-repairable, except when a pump is repaired by eliminating indications of liquids dripping.

e. "Repair delayed" and the reason for the delay if a leak is not repaired within 15 calendar days after discovery of the leak.

f. The signature of the permittee (or designate) whose decision it was that repair could not be effected without a process shutdown.

g. The expected date of successful repair of the leak if a leak is not repaired within 15 days.

h. Dates of process unit shutdowns that occur while the equipment is unrepaired.

i. The date of successful repair of the leak.
[40 CFR §60.486a(c) & §60.5421(a)]

8.4.9. The following information pertaining to all equipment subject to the requirements in Conditions 8.1.1. and 8.1.2. shall be recorded in a log that is kept in a readily accessible location:

a. A list of identification numbers for equipment subject to the requirements of Conditions 8.1.1.c. and 8.1.2. (Subpart VVa Components).

b. A list of identification numbers for equipment that are designated for no detectable emissions under the provisions of §§60.482-2a(e), 60.482-3a(i), and 60.482-7a(f).

c. The designation of equipment as subject to the requirements of §60.482-2a(e), §60.482-3a(i), or §60.482-7a(f) shall be signed by the owner or operator. Alternatively, the owner or operator may establish a mechanism with their permitting authority that satisfies this requirement.

d. The dates of each compliance test as required in §§60.482-2a(e), 60.482-3a(i), 60.482-4a, and 60.482-7a(f).

e. The background level measured during each compliance test.

f. The maximum instrument reading measured at the equipment during each compliance test.

g. A list of identification numbers for equipment in vacuum service.

h. The date and results of the weekly visual inspection for indications of liquids dripping from pumps in light liquid service.

i. Records of the information specified in paragraphs (e)(8)(i) through (vi) of this section for monitoring instrument calibrations conducted according to sections 8.1.2 and 10 of Method 21 of appendix A-7 of this part and §60.485a(b).

j. Date of calibration and initials of operator performing the calibration.

k. Calibration gas cylinder identification, certification date, and certified concentration.

l. Instrument scale(s) used.

m. A description of any corrective action taken if the meter readout could not be adjusted to correspond to the calibration gas value in accordance with section 10.1 of Method 21 of appendix A-7 of this part.

n. Results of each calibration drift assessment required by §60.485a(b)(2) (i.e., instrument reading for calibration at end of monitoring day and the calculated percent difference from the initial calibration value).

o. If the permittee makes their own calibration gas, a description of the procedure used.

p. The connector monitoring schedule for each process unit as specified in §60.482-11a(b)(3)(v).
[40 CFR §60.486a(e) & §60.5421(a)]

8.4.10. The permittee must keep the following records when using the AWP for monitoring equipment leaks in Condition 8.2.1.:

a. Identify equipment at the facility for which the permittee has chosen to use the AWP.

b. The detection sensitivity level selected from Table 1 to subpart A of this part for the optical gas imaging instrument.

c. The analysis to determine the piece of equipment in contact with the lowest mass fraction of chemicals that are detectable, as specified in 40 CFR §60.18(i)(2)(i)(A).

d. The technical basis for the mass fraction of detectable chemicals used in the equation in 40 CFR §60.18(i)(2)(i)(B).

e. The daily instrument check. Record the distance, per 40 CFR §60.18 (i)(2)(iv)(B), and the flow meter reading, per 40 CFR §60.18 (i)(2)(iv)(C), at which the leak was imaged. Keep a video record of the daily instrument check for each configuration of the optical gas imaging instrument used during the leak survey (for example, the daily instrument check must be conducted for each lens used). The video record must include a time and date stamp for each daily instrument check. The video record must be kept for 5 years.

f. A video record must be used to document the leak survey results. The video record must include a time and date stamp for each monitoring event. A video record can be used to meet the recordkeeping requirements of the applicable subparts if each piece of regulated equipment selected for this work practice can be identified in the video record. The video record must be kept for 5 years.

g. The results of the annual Method 21 screening required in Condition 8.1.1.e.vi. Records must be kept for all regulated equipment specified in item a of this condition. Records must identify the equipment screened, the screening value measured by Method 21, the time and date of the screening, and calibration information required in the 40 CFR §60.485a.
[40 CFR §60.18(i)(4)(i) though (i)(4)(vii) & §60.5421(a)]

8.4.11 The permittee shall maintain information and data that the DeEthanizer Unit is not in VOC service in accordance with 40 CFR §60.5400(f). Such information shall be maintained for the life of the process unit and in a location that is readily accessible.
[40 CFR §§60.486a(i) & (j), & §60.5400(f)]

8.5. Reporting Requirements

8.5.1. The permittee shall submit the initial semiannual report to the Director within 6 months after start-up for each new process unit (i.e. Sherwood VII, VIII, and IX) at the facility. Such report shall be in accordance with Condition 3.5.1.and included the following information:

a. Process unit identification.

b. Number of valves subject to the requirements of Condition 8.1.1.c.ii.

c. Number of pumps subject to the requirements of Condition 8.1.1.c.i.

d. Number of connectors subject to the requirements of Condition 8.1.1.c.iii.

[40 CFR §60.5422(a) and §§60.487a(a), (b)(1) though (b)(3) and (b)(5)]

8.5.2. The permittee shall submit semiannual reports on or before September 15 for the reporting period January 1 to June 30 and on or before March 15 for the reporting period July 1 to December 31 to the Director in satisfying the requirements of 40 CFR §60.5422 and §60.487a(c) for the equipment subject to Conditions 8.1.1c. Such report shall be in accordance with Condition 3.5.1.and included the following information summarized from the information required in Condition 8.4.9:

a. Process unit identification.

b. For each month during the reporting period,

i. Number of valves for which leaks were detected as in Condition 8.1.1.c.ii.

ii. Number of valves for which leaks were not repaired as required in Condition 8.1.1.f.

iii. Number of pumps for which leaks were detected as in Condition 8.1.1.c.i.

iv. Number of pumps for which leaks were not repaired as required in Condition 8.1.1.f.

v. Number of connectors for which leaks were detected as in Condition 8.1.1.c.iii.

vi. Number of connectors for which leaks were not repaired as required in Condition 8.1.1.f.

vii. The fact that explains each delay of repair (DOR) and, where appropriate, why a process unit shutdown was technically infeasible.

c. Dates of process unit shutdown which occurred during the reporting period.

d. Revisions to items reported to Condition 8.5.1. (Initial semiannual report) if changes have occurred since the initial report or subsequent revisions to the initial report.

[40 CFR §60.5420(b), §60.5422(a) and §60.487a(c)]

8.5.3. The permittee shall submit records of annual Method 21 screening as required in Condition 8.2.1.e.vi. to the Administrator via email CCC_AWP@EPA.GOV. The permittee shall maintain records of such submittal in accordance with Condition 3.4.1.

[40 CFR §60.18(i)(5)]

8.5.4. The permittee shall notify the Director when electing to change monitoring procedure or frequency of monitoring for affected equipment subject to the monitoring required in Condition 8.2.1. Such notification shall be submitted 60 days prior to implementing the change.

CERTIFICATION OF DATA ACCURACY

I, the undersigned, hereby certify that, based on information and belief formed after reasonable inquiry, all information contained in the attached _____, representing the period beginning _____ and ending _____, and any supporting documents appended hereto, is true, accurate, and complete.

Signature[1] (please use blue ink) _____ Responsible Official or Authorized Representative _____ Date

Name & Title (please print or type) _____ Name _____ Title

Telephone No. _____ Fax No. _____

[1] This form shall be signed by a "Responsible Official." "Responsible Official" means one of the following:

a. For a corporation: The president, secretary, treasurer, or vice-president of the corporation in charge of a principal business function, or any other person who performs similar policy or decision-making functions for the corporation, or a duly authorized representative of such person if the representative is responsible for the overall operation of one or more manufacturing, production, or operating facilities applying for or subject to a permit and either:

(i) the facilities employ more than 250 persons or have a gross annual sales or expenditures exceeding $25 million (in second quarter 1980 dollars), or

(ii) the delegation of authority to such representative is approved in advance by the Director;

b. For a partnership or sole proprietorship: a general partner or the proprietor, respectively;

c. For a municipality, State, Federal, or other public entity: either a principal executive officer or ranking elected official. For the purposes of this part, a principal executive officer of a Federal agency includes the chief executive officer having responsibility for the overall operations of a principal geographic unit of the agency (e.g., a Regional Administrator of U.S. EPA); or

d. The designated representative delegated with such authority and approved in advance by the Director.

Andrews, Edward S

From: Jarrett, James F
Sent: Tuesday, August 18, 2015 11:38 AM
To: Andrews, Edward S
Subject: MarkWest Sherwood LDAR report 1H2015.pdf
Attachments: MarkWest Sherwood LDAR report 1H2015.pdf

Here's the report that shows +16,000 components.

Andrews, Edward S

From: Jarrett, James F
Sent: Tuesday, August 18, 2015 11:28 AM
To: Andrews, Edward S
Subject: Emailing: Sherwood-MEL
Attachments: Sherwood-MEL.XLS

Your message is ready to be sent with the following file or link attachments:

Sherwood-MEL

Note: To protect against computer viruses, e-mail programs may prevent sending or receiving certain types of file attachments. Check your e-mail security settings to determine how attachments are handled.

Andrews, Edward S

From: Hosford, Chip <hosford.chip@epa.gov>
Sent: Thursday, July 16, 2015 2:29 PM
To: Jarrett, James F
Cc: Andrews, Edward S; Keatley, Robert L; Maldonado, Zelma; Mastro, Donna; Snyder, Doug; Chapman, Apple; Caballero, Kathryn; Secrest, Cary; Williams, Christopher
Subject: RE: MarkWest Sherwood Info.

Thanks Jamie. We had a call with MarkWest today and mentioned that we communicated our concerns to WVDEP as well.

Best regards,

Bowen (Chip) Hosford
Office of Enforcement and Compliance Assurance
Air Protection Division
Region III
U.S. EPA
215-814-3158

From: Jarrett, James F [mailto:James.F.Jarrett@wv.gov]
Sent: Thursday, July 16, 2015 1:08 PM
To: Hosford, Chip
Cc: Andrews, Edward S; Keatley, Robert L
Subject: MarkWest Sherwood Info.

Chip,

Sherwood has blowdown emission estimates in their permit application. I did not see any pigging VOC/HAP emission estimates. We might consider this an unpermitted emission source.

Best regards,

James F. Jarrett
Compliance and Enforcement Section
Division of Air Quality
West Virginia Department of Environmental Protection
601 57th Street
Charleston, WV 25304
Office: 304-926-0499 ext. 1207
Fax: 304-926-0478
Room 1138
www.dep.wv.gov

"Show me a man who cannot bother to do little things and I'll show you a man who cannot be trusted to do big things" – Lawrence Bell

NOTE: Written communications to or from State employees or officials regarding State business are public records available to the public and media upon request. Your email communications, therefore, may be subject to public disclosure. **However,** if this e-mail concerns anticipated or current litigation or adversarial administrative proceedings to which the West Virginia Department of

Environmental Protection is or would be a party, this e-mail is an attorney-client communication and is, therefore, exempt from the provisions of West Virginia's Freedom of Information Act. *See*, W. Va. Code § 29B-1-4.

Andrews, Edward S

From: Jarrett, James F
Sent: Thursday, July 16, 2015 1:08 PM
To: Chip Hosford (Hosford.Chip@epamail.epa.gov)
Cc: Andrews, Edward S; Keatley, Robert L
Subject: MarkWest Sherwood Info.

Chip,

Sherwood has blowdown emission estimates in their permit application. I did not see any pigging VOC/HAP emission estimates. We might consider this an unpermitted emission source.

Best regards,

James F. Jarrett
Compliance and Enforcement Section
Division of Air Quality
West Virginia Department of Environmental Protection
601 57th Street
Charleston, WV 25304
Office: 304-926-0499 ext. 1207
Fax: 304-926-0478
Room 1138
www.dep.wv.gov

"Show me a man who cannot bother to do little things and I'll show you a man who cannot be trusted to do big things" - Lawrence Bell

NOTE: Written communications to or from State employees or officials regarding State business are public records available to the public and media upon request. Your email communications, therefore, may be subject to public disclosure. **However,** if this e-mail concerns anticipated or current litigation or adversarial administrative proceedings to which the West Virginia Department of Environmental Protection is or would be a party, this e-mail is an attorney-client communication and is, therefore, exempt from the provisions of West Virginia's Freedom of Information Act. *See*, W. Va. Code § 29B-1-4.

Andrews, Edward S

From: Jarrett, James F
Sent: Tuesday, July 14, 2015 1:07 PM
To: Andrews, Edward S
Cc: Keatley, Robert L
Subject: MarkWest Sherwood Unpermitted Flare

Ed,

just checking....did Sherwood add the unpermitted dehy flare to the permit? I'm trying to figure whether we need to send them an NOV.

Andrews, Edward S

From: Andrews, Edward S
Sent: Friday, July 10, 2015 8:55 AM
To: Nathan Wheldon
Cc: dale.gable@markwest.com; Jarrett, James F
Subject: 017-00034_PERM_R13-2914C_PreDraft.docx
Attachments: 017-00034_PERM_R13-2914C_PreDraft.docx

Nathan: Here is your copy of a predraft for you to review. I will be putting together a packet together next week for my supervisor to review in the meanwhile. I don't set any specific date to receive comments back because my supervisor usually takes a few days to a few weeks to get back to me with her comments or issues with my recommendations. I will contact you at that point to see if you have comments/suggestions/issues with it before I make it available for public comment.

In the future, I will provide you a several documents how I came up with the emission limits. I notice that the emissions for the heaters that had manufacturer's data were not correct to zero percent oxygen. I corrected these rates (NOx CO and VOCs) to zero percent oxygen.

For the flares, I used a Technical Supplement for Flares published by the TCEQ (TCEQ publication RG-360A/11) . The emissions and flowrate limits were based on the 200,0000 lb/hr worst case event occurring 24 times a year assuming 100% propane with the purge gas & pilot lights gas. Per the dwg of the flare assembly, I counted 7 pilot lights instead of 6 as listed in the forms.

Should you have any questions about this email or the predraft, please contact me.

Sincerely,

Edward S. Andrews, P.E.
Engineer
West Virginia Department of Environmental Protection
Division of Air Quality
601 57th Street, SE
Charleston, WV 25304
304.926.0499 ext. 1214

Andrews, Edward S

From: Andrews, Edward S
Sent: Monday, July 06, 2015 8:37 AM
To: Jarrett, James F
Subject: FW: Dehy Flare
Attachments: SFI Condensers for Ohio.pdf; SFI Flare Volume Chart.pdf; SFI VOC Test Data.pdf; Sherwood GlyCalc Run.pdf

Here is the stuff on the dehy flare. Plus, I added their glycalc run.

Ed

ID # 17-34
Reg R13-2914C
Company MarkWest
Facility Sherwood Initials EA

From: Nathan Wheldon [mailto:Nathan.Wheldon@markwest.com]
Sent: Thursday, July 02, 2015 10:11 AM
To: Andrews, Edward S; Dale Gable
Subject: Dehy Flare

Ed, please see attached the vendor information I have from SFI for the dehydrator flare at Sherwood. This flare is the 72" model.

From: Andrews, Edward S [mailto:Edward.S.Andrews@wv.gov]
Sent: Thursday, July 02, 2015 5:24 AM
To: Dale Gable
Cc: Nathan Wheldon
Subject: RE: Refrigeration Compressors

Good Answer. I'll make sure is it noted in the write up why they are excluded from the LDAR of Subpart OOOO.

Thanks,
Ed

From: Dale Gable [mailto:Dale.Gable@markwest.com]
Sent: Thursday, July 02, 2015 7:22 AM
To: Andrews, Edward S
Subject: Refrigeration Compressors

Good Morning Edward,

Just a quick FYI on our Refrigeration Compressors at Sherwood. All of the compressors are screw-type compressors that are not defined as "Centrifugal Compressors", per 40 CFR 60.5380 and 60.5430.

Regards,

Dale

Entire Document
NON-CONFIDENTIAL

Superior Fabrication, Inc.

Presents The

Emissions, Volatiles and Aromatics Control System

EVAC System

SCOPE:

EVAC is Superior Fabrication's answer to the ever-increasing need for an environmentally safe way of disposing BTEX and VOC from glycol regeneration units. The basic EVAC System meets the requirements of CFR title 40, §63.771(d)(1)(ii) as a vapor recovery device (condenser) by reducing the mass content of total HAP by 95% or more. The type of condenser we incorporate is either natural draft, which is typically used on small to medium sized units, or a forced air unit. Tests have been completed as well as sample modeling using GRI-GLYCalc to confirm the mass reduction efficiency. Since many dehydrators operate in regions that have a wide variety of ambient conditions, thus making it difficult to maintain constant control, it may be necessary to add the optional Enclosed Flare.

PROCESS:

Overhead vapors, which have previously been vented to the atmosphere, are piped through a condenser into an accumulator vessel. Water vapor and condensable hydrocarbons are condensed then separated from the gasses in the accumulator vessel. If the regeneration unit is equipped with a still column type skimmer or aromatic separator, the hydrocarbon line from such may be tied into the inlet of the accumulator.

The condensed liquids are pumped or "boosted" to a slop tank or other collection point for disposal.

The non-condensable vapors are then vented, or piped through an in-line flame arrestor and into the optional enclosed flare.

Enclosed Flare Option:

While the flare could be used without the aid of the condenser and accumulator, SFI insists on installing the condenser ahead of the flare to prevent introduction of any hydrocarbon liquids into the flare. The Enclosed Flare is sometimes refered to as a ground flare, as in the case of API publication 931 chapter 15. It is simply a flare that

has been surrounded by an insulated barrier. As opposed to an elevated flare, the enclosed flare has little to no heat radiation on personnel and adjacent equipment. Since the flare is at ground level, maintenance is much easier and safer. The enclosure also limits the affects of wind and downdrafts.

The enclosed flare meets the requirements of CFR title 40 §63.771(d)(1)(iii) as a "Flare" per §63.11(b).

§63.11(b)(1) Operator shall monitor and operate the control device.

§63.11(b)(2) The SFI flare is a non-assisted, natural draft type.

§63.11(b)(3) The flare is operated continuously.

§63.11(b)(4) The flare is designed to have no visible emissions, except for a maximum total of 5 minutes in any 2 hour period. Test Method 22 in appendix A of part 60 is to be used in determining visible emissions.

§63.11(b)(5) The flare is equipped with a constant pilot flame monitored by a thermocouple. The thermocouple causes instant re-light should there be a pilot outage.

§63.11(b)(6) Refer to §63.11(b)(7)(i) The SFI flares are sized for 10 ft/sec based on anticipated flow rates but have been designed for a maximum velocity of 60 ft/sec. Flares that operate over the 10 ft/sec may show visible flame above the enclosure as velocities approach 60 ft/sec. This is natural and acceptable, even on a continuous basis as long as the flare remains without visible emissions as noted above.

It should be noted that the flare is actually a secondary control device since the condenser is designed to remove the majority of the HAP. The Flare has an efficiency rating of 98%.

Installation and operating instructions are covered under separate documents.

Superior Fabrication, Inc. (580) 243-5693 phone
801 S. Eastern (580) 243-5507 fax
Elk City, Oklahoma 73644 superiorfab@superiorfab.com e-mail
Visit our web site: superiorfab.com

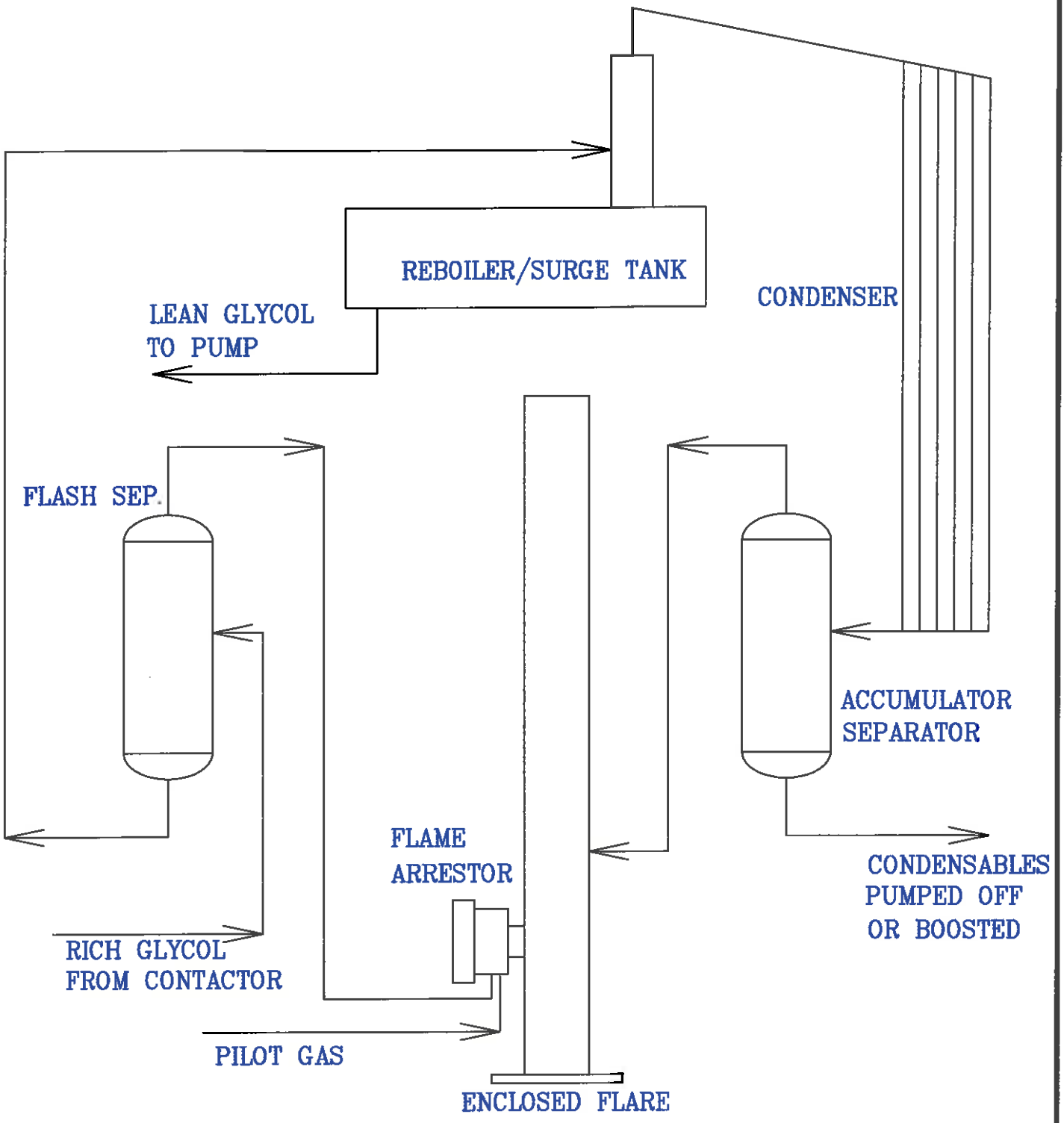

DWN: T. RICKEL	SFI SUPERIOR FABRICATION, INC.	(X) (X)
DATE: 18 NOV 97	ELK CITY, OKLAHOMA	
CHKD: T. RICKEL		
MODEL: X	SCALE: NONE CUSTOMER: STANDARD	DRAWING NO: EVAC-1
SERIAL: NONE	EVAC SYSTEM - FLOW DIAGRAM	18 NOV 97
B.M. YES ■ NO □		

SFI
SUPERIOR FABRICATION, INC.
801 S Eastern Avenue, Elk City, OK 73644
(580) 243-5693 Fax: (580) 243-5507

Enclosed Flare Gas Capacity Chart

Gas Heating Value	48" Enclosed Flare (2.1 MM BTU/hr)		60" Enclosed Flare (4.8 MM BTU/hr)		72" Enclosed Flare (7.0 MM BTU/hr)	
BTU/ft^3	CFH	MCFD	CFH	MCFD	CFH	MCFD
600	3,500	84	8,000	192	11,667	280
700	3,000	72	6,857	165	10,000	240
800	2,625	63	6,000	144	8,750	210
900	2,333	56	5,333	128	7,778	187
1,000	2,100	50	4,800	115	7,000	168
1,100	1,909	46	4,364	105	6,364	153
1,200	1,750	42	4,000	96	5,833	140
1,300	1,615	39	3,692	89	5,385	129
1,400	1,500	36	3,429	82	5,000	120
1,500	1,400	34	3,200	77	4,667	112
1,600	1,313	32	3,000	72	4,375	105
1,700	1,235	30	2,824	68	4,118	99
1,800	1,167	28	2,667	64	3,889	93
1,900	1,105	27	2,526	61	3,684	88
2,000	1,050	25	2,400	58	3,500	84
2,100	1,000	24	2,286	55	3,333	80
2,200	955	23	2,182	52	3,182	76
2,300	913	22	2,087	50	3,043	73
2,400	875	21	2,000	48	2,917	70
2,500	840	20	1,920	46	2,800	67
2,600	808	19	1,846	44	2,692	65
2,700	778	19	1,778	43	2,593	62
2,800	750	18	1,714	41	2,500	60

BTU/ft^3 = British Thermal Units per cubic foot
CFH = Cubic Feet per Hour
MCFD = Thousand Cubic Feet per Day

Example:
Maximum capacity of a 48" Flare with 1,050 BTU/cu.ft. gas:

$$\frac{2{,}100{,}000}{1{,}050} \times 24 = 48{,}000\ cu.ft./Day (48\ \text{MCFD})$$

SFI

SUPERIOR FABRICATION INC.

Enclosed Flare

Gas Capacity Graph

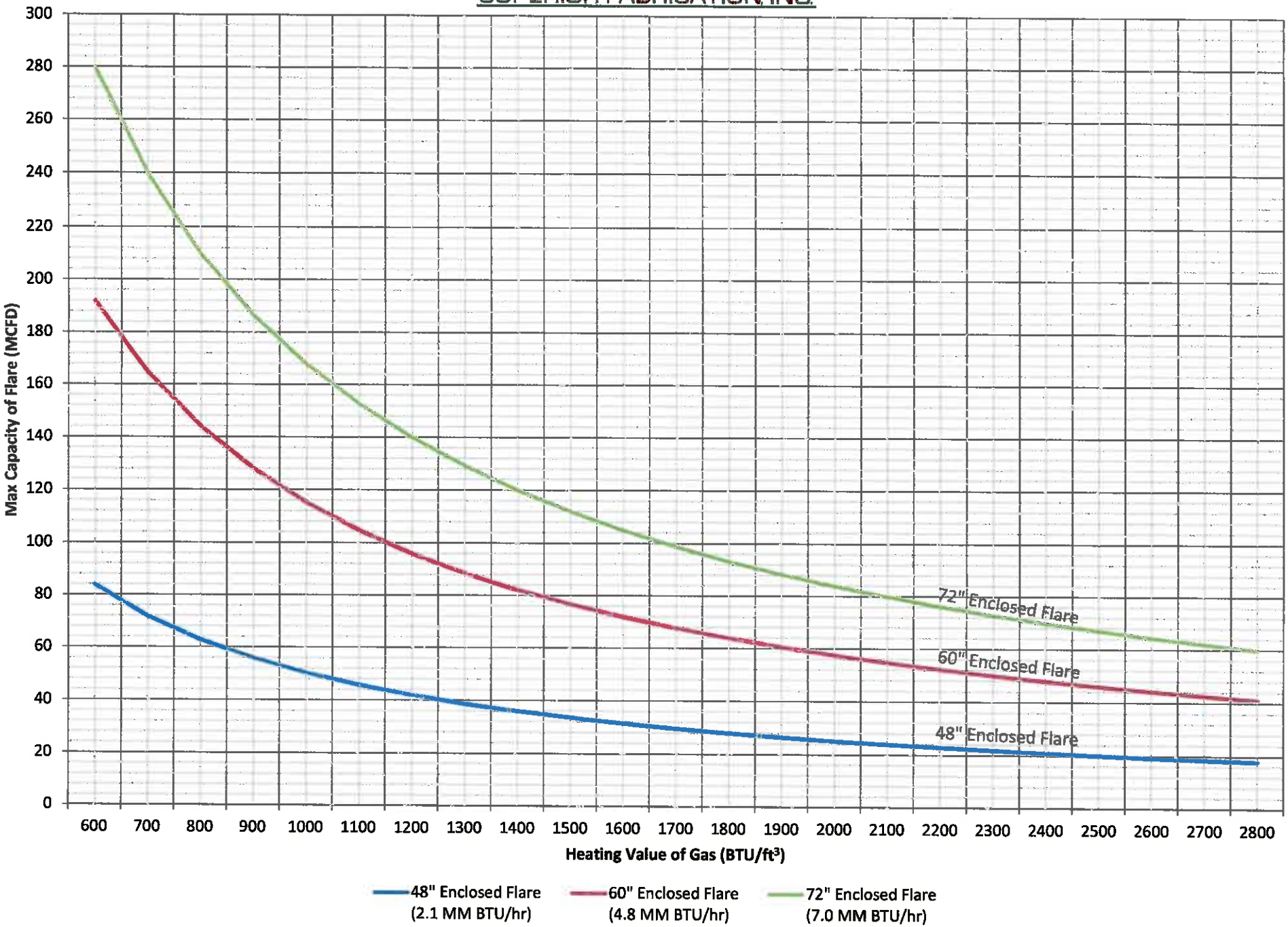

VOC Flare Test Calculations

Date samples taken: 9-24-2009
Samples taken by: Shamrock Gas Analysis
Technician: Hal Brennan
Calculation results by: Tim Rickel

Test One, High Fire w/Propelene & Methane mix
Inlet stream, cylinder # 178 1705.916 BTU/cu ft
Outlet stream, cylinder # 8354 13.116 BTU/cu ft
Rate: 1100 scfh (air), corrected for gravity: 1093.13 scfh
Sp.Gr. 1.0126

(1705.916 - 13.116) 1093.13 = 1,850,450.464 BTU/hr

1 - (13.116 / 1705.916) = 99.227 % destruction

Test Two, Low Fire w/Propelene & Methane mix
Inlet stream, cylinder # 8967 2162.963 BTU/cu ft
Outlet stream, cylinder # 7032 3.426 BTU/cu ft
Rate: 310 scfh (air), corrected for gravity: 271.2 scfh
Sp.Gr. 1.3064

(2162.963 - 3.426) 271.2 = 585,666.434 BTU/hr

1 - (3.426 / 2162.963) = 99.842 % destruction

Test Three, High Fire Methane
Inlet stream, cylinder # 7782 1042.095 BTU/cu ft
Outlet stream, cylinder # 9130 5.772 BTU/cu ft
Rate: 1550 scfh (air), corrected for gravity: 2002.71 scfh
Sp.Gr. 0.599

(1042.095 - 5.772) 2002.71 = 2,075,454.435 BTU/hr

1 - (5.772 / 1042.095) = 99.446 % destruction

Test Four, Field Test, Tank Vapors
Inlet stream, cylinder # 9232 2776.4 BTU/cu ft
Outlet stream, cylinder # 9300 5.7 BTU/cu ft
Rate: 761.2 scfh (gas)
Sp.Gr. 1.656

(2776.4 - 5.7) 761.2 = 2,109,056.84 BTU/hr

1 - (5.7 / 2776.4) = 99.795 % destruction

Tim Rickel 9-28-09

SUPERIOR FABRICATION INC.

		Line Pressure..	12 OZ
Operator.....	NOT/REC	Line Temp.....	80 F
Lease.....	HIGH FIRE INL W/PROP	Cylinder #.....	178
Station.....	SHOP	Sampled By.....	MAL BRENNAN
Sample Type....	C6+	Date Run.....	09/28/2009
Date Pulled....	09/24/2009	Analyzed By....	BRENNAN
Eff. Date.....	09/01/2009	Lab Ref #.....	K02849

Physical Constants per GPA 2145-09
Calculations per GPA 2172-96
@ 14.7300 psia and 60 deg F

	MOL%	GPM	BTU
Nitrogen	0.523	0.058	0.000
Carbon Dioxide	0.505	0.086	0.000
Methane	52.216	8.850	528.602
Ethane	0.876	0.234	15.538
Propane	45.536	12.542	1148.382
ISO-Butane	0.059	0.019	1.923
N-Butane	0.111	0.035	3.630
ISO-Pentane	0.050	0.018	2.005
N-Pentane	0.048	0.017	1.929
Hexanes+	0.076	0.033	3.907
TOTALS	100.000	21.893	1705.916

GROSS HEATING VALUE @ 14.7300 PSI

DRY	WET	
1705.916	1676.157	Ideal
1718.577	1689.389	Real

Z Factor:	0.9926328
Specific Gravity (Ideal):	1.0126
Specific Gravity (Real):	1.0197

GASOLINE CONTENT (GPM)

Ethane & Heavier	12.899
Propane & Heavier	12.665
Butane & Heavier	0.123
Pentane & Heavier	0.069

Remarks:
SAMPLE C #1

* Ideal Gas Heating Value Per Real Cubic Feet

SUPERIOR FABRICATION INC.

		Line Pressure..	0 OZ
Operator.....	NOT/REC	Line Temp.....	754 F
Lease.....	HIGH FIRE EXH W/PROP	Cylinder #.....	8354
Station.....	SHOP	Sampled By.....	MAL BRENNAN
Sample Type....	C6+	Date Run.....	09/28/2009
Date Pulled....	09/24/2009	Analyzed By....	BRENNAN
Eff. Date.....	09/01/2009	Lab Ref #.....	K02853

Physical Constants per GPA 2145-09
Calculations per GPA 2172-96
@ 14.6500 psia and 60 deg F

	MOL%	GPM	BTU
Nitrogen	95.542	10.452	0.000
Carbon Dioxide	4.108	0.697	0.000
Methane	0.000	0.000	0.000
Ethane	0.000	0.000	0.000
Propane	0.155	0.042	3.888
ISO-Butane	0.000	0.000	0.000
N-Butane	0.014	0.004	0.455
ISO-Pentane	0.021	0.008	0.838
N-Pentane	0.022	0.008	0.879
Hexanes+	0.138	0.060	7.056
TOTALS	100.000	11.271	13.116

GROSS HEATING VALUE @ 14.6500 PSI

DRY	WET	
13.116	12.887	Ideal
13.121	12.894	Real

Z Factor:	0.9995982
Specific Gravity (Ideal):	0.9947
Specific Gravity (Real):	0.9947

GASOLINE CONTENT (GPM)

Ethane & Heavier	0.122
Propane & Heavier	0.122
Butane & Heavier	0.080
Pentane & Heavier	0.075

Remarks:
SAMPLE C #2

* Ideal Gas Heating Value Per Real Cubic Feet

SUPERIOR FABRICATION INC.

		Line Pressure..	0.5000 OZ
Operator.....	NOT/REC	Line Temp.....	82 F
Lease.....	LOW FIRE INL W/PROP.	Cylinder #.....	8967
Station.....	SHOP	Sampled By.....	MAL BRENNAN
Sample Type....	C6+	Date Run.....	09/28/2009
Date Pulled....	09/24/2009	Analyzed By....	BRENNAN
Eff. Date.....	09/01/2009	Lab Ref #.....	K02851

Physical Constants per GPA 2145-09
Calculations per GPA 2172-96
@ 14.6500 psia and 60 deg F

	MOL%	GPM	BTU
Nitrogen	0.288	0.032	0.000
Carbon Dioxide	0.220	0.037	0.000
Methane	22.130	3.730	222.813
Ethane	0.457	0.122	8.062
Propane	76.689	21.008	1923.532
ISO-Butane	0.032	0.010	1.037
N-Butane	0.060	0.019	1.951
ISO-Pentane	0.035	0.013	1.396
N-Pentane	0.034	0.012	1.359
Hexanes+	0.055	0.024	2.812
TOTALS	100.000	25.006	2162.963

GROSS HEATING VALUE @ 14.6500 PSI

DRY	WET	
2162.963	2125.232	Ideal
2190.932	2153.806	Real

Z Factor:	0.9872341
Specific Gravity (Ideal):	1.3064
Specific Gravity (Real):	1.3227

GASOLINE CONTENT (GPM)

Ethane & Heavier	21.207
Propane & Heavier	21.086
Butane & Heavier	0.078
Pentane & Heavier	0.049

Remarks:
SAMPLE A #2

* Ideal Gas Heating Value Per Real Cubic Feet

SUPERIOR FABRICATION INC.

		Line Pressure..	0 OZ
Operator.....	NOT/REC	Line Temp.....	276 F
Lease.....	LOW FIRE EXH W/PROP.	Cylinder #.....	7032
Station.....	SHOP	Sampled By.....	MAL BRENNAN
Sample Type....	C6+	Date Run.....	09/28/2009
Date Pulled....	09/24/2009	Analyzed By....	BRENNAN
Eff. Date.....	09/01/2009	Lab Ref #.....	K02854

Physical Constants per GPA 2145-09
Calculations per GPA 2172-96
@ 14.7300 psia and 60 deg F

	MOL%	GPM	BTU
Nitrogen	97.881	10.766	0.000
Carbon Dioxide	2.042	0.348	0.000
Methane	0.000	0.000	0.000
Ethane	0.000	0.000	0.000
Propane	0.000	0.000	0.000
ISO-Butane	0.000	0.000	0.000
N-Butane	0.008	0.003	0.262
ISO-Pentane	0.017	0.006	0.682
N-Pentane	0.017	0.006	0.683
Hexanes+	0.035	0.015	1.799
TOTALS	100.000	11.144	3.426

GROSS HEATING VALUE @ 14.7300 PSI

DRY	WET	
3.426	3.366	Ideal
3.427	3.368	Real

Z Factor:	0.9996644
Specific Gravity (Ideal):	0.9799
Specific Gravity (Real):	0.9798

GASOLINE CONTENT (GPM)

Ethane & Heavier	0.030
Propane & Heavier	0.030
Butane & Heavier	0.030
Pentane & Heavier	0.028

Remarks:
SAMPLE A #1

* Ideal Gas Heating Value Per Real Cubic Feet

SUPERIOR FABRICATION INC.

		Line Pressure..	19.5000 OZ
Operator.....	NOT/REC	Line Temp.....	78.5000 F
Lease.....	HIGH FIRE INL-HYDRO.	Cylinder #.....	7782
Station.....	SHOP	Sampled By.....	MAL BRENNAN
Sample Type....	C6+	Date Run.....	09/28/2009
Date Pulled....	09/24/2009	Analyzed By....	BRENNAN
Eff. Date.....	09/01/2009	Lab Ref #.....	K02850

Physical Constants per GPA 2145-09
Calculations per GPA 2172-96
@ 14.7300 psia and 60 deg F

	MOL%	GPM	BTU
Nitrogen	1.241	0.136	0.000
Carbon Dioxide	0.791	0.135	0.000
Methane	94.446	16.007	956.112
Ethane	1.869	0.500	33.152
Propane	0.808	0.223	20.377
ISO-Butane	0.157	0.051	5.117
N-Butane	0.301	0.095	9.842
ISO-Pentane	0.114	0.042	4.572
N-Pentane	0.099	0.036	3.978
Hexanes+	0.174	0.076	8.945
TOTALS	100.000	17.301	1042.095

GROSS HEATING VALUE @ 14.7300 PSI

DRY	WET	
1042.095	1023.917	Ideal
1044.446	1026.564	Real

Z Factor:	0.9977488
Specific Gravity (Ideal):	0.5990
Specific Gravity (Real):	0.6001

GASOLINE CONTENT (GPM)

Ethane & Heavier	1.022
Propane & Heavier	0.522
Butane & Heavier	0.300
Pentane & Heavier	0.153

Remarks:
SAMPLE B #1

* Ideal Gas Heating Value Per Real Cubic Feet

SUPERIOR FABRICATION INC.

Operator.....	NOT/REC	Line Pressure..	0 PSI
Lease.....	HIGH FIRE EXH-HYDRO.	Line Temp.....	711 F
Station.....	SHOP	Cylinder #.....	9130
Sample Type....	C6+	Sampled By.....	MAL BRENNAN
Date Pulled....	09/24/2009	Date Run.....	09/28/2009
Eff. Date.....	09/01/2009	Analyzed By....	BRENNAN
		Lab Ref #.....	K02852

Physical Constants per GPA 2145-09
Calculations per GPA 2172-96
@ 14.7300 psia and 60 deg F

	MOL%	GPM	BTU
Nitrogen	94.109	10.351	0.000
Carbon Dioxide	5.753	0.982	0.000
Methane	0.000	0.000	0.000
Ethane	0.000	0.000	0.000
Propane	0.022	0.006	0.555
ISO-Butane	0.000	0.000	0.000
N-Butane	0.014	0.004	0.458
ISO-Pentane	0.021	0.008	0.842
N-Pentane	0.022	0.008	0.884
Hexanes+	0.059	0.026	3.033
TOTALS	100.000	11.384	5.772

GROSS HEATING VALUE @ 14.7300 PSI

DRY	WET	
5.772	5.671	Ideal
5.774	5.675	Real

Z Factor:	0.9995759
Specific Gravity (Ideal):	1.0012
Specific Gravity (Real):	1.0012

GASOLINE CONTENT (GPM)

Ethane & Heavier	0.052
Propane & Heavier	0.052
Butane & Heavier	0.046
Pentane & Heavier	0.041

Remarks:
SAMPLE B #2

* Ideal Gas Heating Value Per Real Cubic Feet

SHAMROCK GAS ANALYSIS
1100 South Madden
Shamrock, Texas 79079
(806)256-3249

TANK 4A

GAS ANALYSIS REPORT NO: G5083GX/K **DATE:** 15-Sep-09

FOR: Superior Fabrication, INC.
Attn: Ronnie Brickman
10885 Exhibition Rd.
Canadian, Texas
79014

SAMPLE IDENTIFICATION

COMP: Chesapeake
FIELD: Canadian Area
LEASE: Zybach #14-24 Tank VOC
STA. #: Not/Rec

SAMPLE DATA

DATE: 11-Sep-09 **BY:** M. Brennan
PRES: 15 VAC psig **TEMP:** 92 Deg. F. **FIELD GRAVITY:** Not/Rec
FLOW: Not/Rec MCF/D **DIFF:** Not/Rec IN. Hg **DEW POINT** Not/Rec LBS H2O
REMARKS: Extended Analysis

CYL # : 9232 **LAB # :** G5083GX/K - FT0388

COMPONENT ANALYSIS

COMPONENTS		MOL PERCENT	GPM @ 14.730 psia
CARBON DIOXIDE	(CO2)	0.18 ,04	
NITROGEN	(N2)	0.08	
METHANE	(C1)	10.09	
ETHANE	(C2)	17.76	4.747
PROPANE	(C3)	30.31	8.344
ISOBUTANE	(IC4)	7.42	2.426
N-BUTANE	(NC4)	17.70	5.579
ISOPENTANE	(IC5)	5.13	1.878
N-PENTANE	(NC5)	5.17	1.873
HEXANES PLUS	(C6+)	6.17	2.459
TOTALS		100.00	

ETHANE+ GPM: 27.306
PROPANE+ GPM: 22.559
MOLECULAR WEIGHT: 47.966 **ISO-PENTANE+ GPM:** 6.210

Compressibility Factor (Z): 0.9778

Specific Gravity @ 60 Deg. F. (real): 1.656

BTU / CU. FT. @ 60 Deg. F., 14.730 **PSIA (REAL):** **DRY** 2776.4
WET 2728.1

SHAMROCK GAS ANALYSIS
1100 South Madden
Shamrock, Texas 79079
(806)256-3249

Flare

4B

GAS ANALYSIS REPORT NO: G5082GX/H **DATE:** 15-Sep-09

FOR: Superior Fabrication, INC.
Attn: Ronnie Brickman
10885 Exhibition Rd.
Canadian, Texas
79014

SAMPLE IDENTIFICATION

COMP: Chesapeake
FIELD: Canadian Area
LEASE: Zybach #14-24 Tank VOC Flair Stack
STA. #: Not/Rec

SAMPLE DATA

DATE: 11-Sep-09 **BY:** M. Brennan
PRES: 15 VAC psig **TEMP:** 170 Deg. F. **FIELD GRAVITY:** Not/Rec
FLOW: Not/Rec MCF/D **DIFF:** Not/Rec IN. Hg **DEW POINT** Not/Rec **LBS H2O**
REMARKS: Extended Analysis

CYL # : 9300 **LAB # :** G5082GX/H - FT0388

COMPONENT ANALYSIS

COMPONENTS		MOL PERCENT	GPM @ 14.730 psia
CARBON DIOXIDE	(CO2)	0.79	
NITROGEN	(N2)	99.09	
METHANE	(C1)	0.00	
ETHANE	(C2)	0.00	0.000
PROPANE	(C3)	0.01	0.002
ISOBUTANE	(IC4)	0.00	0.001
N-BUTANE	(NC4)	0.01	0.004
ISOPENTANE	(IC5)	0.01	0.003
N-PENTANE	(NC5)	0.01	0.003
HEXANES PLUS	(C6+)	0.08	0.034
TOTALS		100.00	

		ETHANE+ GPM:	0.047
		PROPANE+ GPM:	0.047
MOLECULAR WEIGHT:	28.210	ISO-PENTANE+ GPM:	0.040
		Compressibility Factor (Z):	0.9997
		Specific Gravity @ 60 Deg. F. (real):	0.974
BTU / CU. FT. @ 60 Deg. F.,	14.730 PSIA (REAL):	DRY	5.7
		WET	5.6

Williams, Jerry

From: Nathan Wheldon <NWheldon@markwest.com>
Sent: Friday, May 04, 2012 5:43 PM
To: Williams, Jerry
Subject: Sherwood Add'l Information
Attachments: Attachment N Updated 5-4-2012.pdf; HYSYS-Spring-Fall.pdf; HYSYS-Summer.pdf; HYSYS-Winter.pdf

Jerry, I have attached the updated Attachment N with the numbers from the storage tanks added in. I've also attached the HYSYS runs that show the condensate and gas production from the tanks during spring/fall, winter, and summer seasons.

For the tanks, at the gas plant side of the facility there will be 4 – 70,000 gallon tanks. These tanks will be pressurized tanks and will not have any emissions. Under normal conditions the contents of the tanks will be unloaded via pipeline. In cases when the pipeline is not operational there will be an emergency truck rack to be able to load product into pressurized trucks. In this case the only emissions would be from the hose disconnect. It would take 1000's of disconnects to achieve even 1/10th of a ton so the emergency truck loading is de-minimis, if it ever occurs. Because these tank are pressurized with no emissions they will not be subject to NSPS Subpart Kb and will only be subject to NSPS Subpart OOOO as far as the entire gas plant would be subject to the rule.

At the compressor station side of the facility we will have 5 tanks. One tank will be a 500 bbl gunbarrel tank and the other four will be 400 bbl and used for water or condensate. For these tanks the uncontrolled emission factor will be greater than 6 tpy per tank. Therefore, we are installing a VRU to control emissions from these tanks that is expected to get 98% control efficiency. As a closed loop system I would expect 100% but we will take 98% to account for potential leaks and downtime. The tanks are not subject to NSPS Subpart Kb because they contain a naturally occurring condensate mixture prior to custody transfer and will be less than 1589.874 m^3 in volume [40 CFR 60.110b(d)(4)]. These tanks will be subject to NSPS Subpart OOOO as recently published in the federal register. As such, monitoring requirements as found in the NSPS Subpart VVa (40 CFR 60.482-489) will be applicable for the tanks and VRU.

The CO_2 emissions were included in the permit. They are in the Attachment N, third page. The calculations show that Sherwood has the potential to emit 83, 116 tpy of CO_2(e), which is well under the 100,000 tpy threshold for major source of GHG.

I believe this fulfills the information that you required for Sherwood, while I still need the affidavit from the paper. If I do not receive that by Tuesday I will call the paper to make sure that it ran and that the affidavit has been sent.

Nathan M. Wheldon P.E.
Sr. Environmental Engineer
Markwest Energy Partners, L.P
Direct: (303) 542-0686
Cell: (970) 631-6127
Fax: (303) 573-4954
e-mail: nwheldon@markwest.com

I.D. No. 017-0084 Reg. 7M4
Company: MarkWest
Facility: Hermosa Region:
Initials: JM

Entire Document
NON-CONFIDENTIAL

MarkWest Liberty Midstream & Resources L.L.C.
Sherwood Gas Plant

Summary of Potential Emissions

Criteria Pollutant Potential Emissions

Process/Facility	Potential Emissions (lb/hr)					
	NOx	CO	VOC	SO_2	PM[1]	HAPs
Compressor Engine #1 (CM-1001)	5.22	1.46	1.67	0.02	0.35	1.10
Compressor Engine #2 (CM-1002)	5.22	1.46	1.67	0.02	0.35	1.10
Compressor Engine (CM-2001)	2.61	0.73	1.46	0.01	0.16	0.46
Generator Engine (G-1001)	11.06	6.39	0.74	0.02	1.34	0.03
Generator Engine (G-1002)	11.06	6.39	0.74	0.02	1.34	0.03
Regeneration Heater (H-711)	0.24	0.47	0.038	0.0042	0.05	0.013
Hot Oil Heater (H-771)	0.85	1.70	0.138	0.0151	0.19	0.047
TEG Dehydration Unit (DH-001)	--	--	2.017	--	--	0.336
Dehydration Unit Reboiler (RB-001)	0.18	0.15	0.010	0.0011	0.01	0.003
Storage Tanks	--	--	2.19	--	--	0.21
Emergency Flare (FL-991)	0.11	0.09	0.006	0.0007	0.01	--
Fugitive Emissions (FUG-001)	--	--	1.017	--	--	0.099
Site Wide Emissions (lb/hr)	36.54	18.84	11.69	0.11	3.81	3.43

[1] PM = PM_{10} = $PM_{2.5}$

Process/Facility	Potential Emissions (tpy)					
	NOx	CO	VOC	SO_2	PM[1]	HAPs
Compressor Engine #1 (CM-1001)	22.86	6.40	7.32	0.09	1.55	4.84
Compressor Engine #2 (CM-1002)	22.86	6.40	7.32	0.09	1.55	4.84
Compressor Engine (CM-2001)	11.44	3.20	6.41	0.04	0.69	2.02
Generator Engine (G-1001)	16.59	9.59	1.11	0.03	2.01	0.04
Generator Engine (G-1002)	16.59	9.59	1.11	0.03	2.01	0.04
Regeneration Heater (H-711)	1.03	2.07	0.17	0.018	0.23	0.058
Hot Oil Heater (H-771)	3.71	7.42	0.605	0.0661	0.84	0.208
TEG Dehydration Unit (DH-001)	--	--	8.836	--	--	1.470
Dehydration Unit Reboiler (RB-001)	0.78	0.65	0.043	0.0047	0.06	0.015
Storage Tanks	--	--	9.58	--	--	0.90
Emergency Flare (FL-991)	0.48	0.40	0.026	0.0029	0.04	--
Fugitive Emissions (FUG-001)	--	--	4.46	--	--	0.432
Site Wide Emissions (tpy)	96.35	45.73	46.97	0.37	8.96	14.87

[1] PM = PM_{10} = $PM_{2.5}$

MarkWest Liberty Midstream & Resources L.L.C.
Sherwood Gas Plant

Summary of Potential Emissions

Hazardous Air Pollutant Potential Emissions

Process/Facility	HAPs - Potential Emissions (lb/hr)					
	Benzene	Ethylbenzene	Toluene	Xylenes	n-Hexane	Formaldehyde
Compressor Engine #1 (CM-1001)	1.56E-02	1.41E-03	1.45E-02	6.52E-03	3.93E-02	4.18E-01
Compressor Engine #2 (CM-1002)	1.56E-02	1.41E-03	1.45E-02	6.52E-03	3.93E-02	4.18E-01
Compressor Engine (CM-2001)	6.91E-03	6.24E-04	6.41E-03	2.89E-03	1.74E-02	1.57E-01
Generator Engine (G-1001)	8.32E-03	--	3.65E-03	2.54E-03	--	2.90E-03
Generator Engine (G-1002)	8.32E-03	--	3.65E-03	2.54E-03	--	2.90E-03
Regeneration Heater (H-711)	1.47E-05	--	2.38E-05	--	1.26E-02	5.24E-04
Hot Oil Heater (H-771)	5.28E-05	--	8.55E-05	--	4.52E-02	1.89E-03
TEG Dehydration Unit (DH-001)	4.00E-02	--	1.19E-01	5.55E-02	1.21E-01	--
Dehydration Unit Reboiler (RB-001)	3.74E-06	--	6.05E-06	--	3.20E-03	1.33E-04
Storage Tanks	3.20E-02	1.35E-03	2.75E-02	6.95E-03	1.43E-01	--
Emergency Flare (FL-991)	--	--	--	--	--	--
Fugitive Emissions (FUG-001)	--	--	--	--	--	--
Site Wide Emissions (lb/hr)	0.13	0.00	0.19	0.06	0.42	1.80

Process/Facility	HAPs - Potential Emissions (tpy)					
	Benzene	Ethylbenzene	Toluene	Xylenes	n-Hexane	Formaldehyde
Compressor Engine #1 (CM-1001)	6.83E-02	6.16E-03	6.33E-02	2.86E-02	1.72E-01	1.83E+00
Compressor Engine #2 (CM-1002)	6.83E-02	6.16E-03	6.33E-02	2.86E-02	1.72E-01	1.83E+00
Compressor Engine (CM-2001)	3.03E-02	2.73E-03	2.81E-02	1.27E-02	7.64E-02	6.87E-01
Generator Engine (G-1001)	1.25E-02	--	5.47E-03	3.81E-03	--	4.35E-03
Generator Engine (G-1002)	1.25E-02	--	3.65E-03	3.81E-03	--	4.35E-03
Regeneration Heater (H-711)	6.43E-05	--	1.04E-04	--	5.51E-02	2.30E-03
Hot Oil Heater (H-771)	2.31E-04	--	3.74E-04	--	1.98E-01	8.26E-03
TEG Dehydration Unit (DH-001)	1.75E-01	--	5.21E-01	2.43E-01	5.32E-01	--
Dehydration Unit Reboiler (RB-001)	1.64E-05	--	2.65E-05	--	1.40E-02	5.85E-04
Storage Tanks	1.40E-01	5.92E-03	1.21E-01	3.05E-02	6.26E-01	--
Emergency Flare (FL-991)	--	--	--	--	--	--
Fugitive Emissions (FUG-001)	--	--	--	--	--	--
Site Wide Emissions (tpy)	0.41	0.02	0.81	0.35	1.85	4.36

aspen

MARKWEST HYDROCARBON, IN
Burlington; MA
USA

Case Name:	SHERWOOD HYSYS SPRINGFALL CASE.HSC
Unit Set:	NewUser
Date/Time:	Fri May 04 13:50:42 2012

Material Stream: Flash Gas flow to VRU

Fluid Package: Basis-1
Property Package: Peng-Robinson

CONDITIONS

	Overall	Vapour Phase	Liquid Phase	Aqueous Phase
Vapour / Phase Fraction	1.0000	1.0000	0.0000	0.0000
Temperature: (F)	53.22	53.22	53.22	53.22
Pressure: (psia)	14.70	14.70	14.70	14.70
Molar Flow (MMSCFD)	0.1210	0.1210	0.0000	0.0000
Mass Flow (lb/hr)	322.6	322.6	0.0000	0.0000
Std Ideal Liq Vol Flow (barrel/day)	58.67	58.67	0.0000	0.0000
Molar Enthalpy (Btu/lbmole)	-3.736e+004	-3.736e+004	-1.091e+005	-1.243e+005
Molar Entropy (Btu/lbmole-F)	45.02	45.02	29.94	11.08
Heat Flow (Btu/hr)	-4.964e+005	-4.964e+005	0.0000	0.0000
Liq Vol Flow @Std Cond (barrel/day)	—	—	0.0000	0.0000

PROPERTIES

	Overall	Vapour Phase	Liquid Phase	Aqueous Phase
Molecular Weight	24.28	24.28	114.9	18.43
Molar Density (lbmole/ft3)	2.685e-003	2.685e-003	0.3874	3.460
Mass Density (lb/ft3)	6.521e-002	6.521e-002	44.50	63.77
Act. Volume Flow (barrel/day)	2.115e+004	2.115e+004	0.0000	0.0000
Mass Enthalpy (Btu/lb)	-1539	-1539	-949.4	-6741
Mass Entropy (Btu/lb-F)	1.854	1.854	0.2606	0.6445
Heat Capacity (Btu/lbmole-F)	11.04	11.04	56.10	19.17
Mass Heat Capacity (Btu/lb-F)	0.4548	0.4548	0.4883	1.040
Lower Heating Value (Btu/lbmole)	4.903e+005	4.903e+005	2.212e+006	4432
Mass Lower Heating Value (Btu/lb)	2.019e+004	2.019e+004	1.926e+004	240.4
Phase Fraction [Vol. Basis]	—	1.000	—	—
Phase Fraction [Mass Basis]	2.122e-314	1.000	0.0000	0.0000
Partial Pressure of CO2 (psia)	4.123e-002	—	—	—
Cost Based on Flow (Cost/s)	0.0000	0.0000	0.0000	0.0000
Act. Gas Flow (ACFM)	82.45	82.45	—	—
Avg. Liq. Density (lbmole/ft3)	0.9680	0.9680	0.3830	3.390
Specific Heat (Btu/lbmole-F)	11.04	11.04	56.10	19.17
Std. Gas Flow (MMSCFD)	0.1210	0.1210	0.0000	0.0000
Std. Ideal Liq. Mass Density (lb/ft3)	23.50	23.50	44.00	62.49
Act. Liq. Flow (USGPM)	0.0000	—	—	0.0000
Z Factor	—	0.9943	6.893e-003	7.718e-004
Watson K	17.23	17.23	12.68	8.816
User Property	—	—	—	—
Partial Pressure of H2S (psia)	0.0000	—	—	—
Cp/(Cp - R)	1.219	1.219	1.037	1.116
Cp/Cv	1.225	1.225	1.037	1.134
Heat of Vap. (Btu/lbmole)	9100	—	—	—
Kinematic Viscosity (cSt)	9.888	9.888	0.8055	1.246
Liq. Mass Density (Std. Cond) (lb/ft3)	—	—	44.31	63.60
Liq. Vol. Flow (Std. Cond) (barrel/day)	—	—	0.0000	0.0000
Liquid Fraction	0.0000	0.0000	1.000	1.000
Molar Volume (ft3/lbmole)	372.4	372.4	2.682	0.2891
Mass Heat of Vap. (Btu/lb)	374.7	—	—	—
Phase Fraction [Molar Basis]	1.0000	1.0000	0.0000	0.0000
Surface Tension (dyne/cm)	—	—	21.85	73.51
Thermal Conductivity (Btu/hr-ft-F)	1.512e-002	1.512e-002	7.350e-002	0.3351
Viscosity (cP)	1.033e-002	1.033e-002	0.6384	1.273
Cv (Semi-Ideal) (Btu/lbmole-F)	9.058	9.058	54.11	17.19

Licensed to: MARKWEST HYDROCARBON, IN
* Specified by user.

Material Stream: Flash Gas flow to VRU (conti

Fluid Package: Basis-1
Property Package: Peng-Robinson

PROPERTIES

		Overall	Vapour Phase	Liquid Phase	Aqueous Phase	
Mass Cv (Semi-Ideal)	(Btu/lb-F)	0.3730	0.3730	0.4711	0.9322	
Cv	(Btu/lbmole-F)	9.014	9.014	54.11	16.51	
Mass Cv	(Btu/lb-F)	0.3712	0.3712	0.4711	0.9173	
Cv (Ent. Method)	(Btu/lbmole-F)	—	—	—	—	
Mass Cv (Ent. Method)	(Btu/lb-F)	—	—	—	—	
Cp/Cv (Ent. Method)		—	—	—	—	
Reid VP at 37.8 C	(psia)	—	—	7.416	0.3940	
True VP at 37.8 C	(psia)	2342	2342	20.04	1.154	
Liq. Vol. Flow - Sum(Std. Cond)	(barrel/day)	0.0000	0.0000	0.0000	0.0000	
Viscosity Index		—	—	-1.482	-0.2983	

COMPOSITION

Overall Phase

Vapour Fraction 1.0000

COMPONENTS	MOLAR FLOW (lbmole/hr)	MOLE FRACTION	MASS FLOW (lb/hr)	MASS FRACTION	LIQUID VOLUME FLOW (barrel/day)	LIQUID VOLUME FRACTION
Nitrogen	0.0838	0.0063	2.3464	0.0073	0.1992	0.0034
CO2	0.0373	0.0028	1.6405	0.0051	0.1361	0.0023
Methane	9.0520	0.6813	145.2188	0.4502	33.2125	0.5661
Ethane	2.1190	0.1595	63.7172	0.1975	12.2663	0.2091
Propane	0.8688	0.0654	38.3124	0.1188	5.1776	0.0883
i-Butane	0.1285	0.0097	7.4677	0.0231	0.9099	0.0155
n-Butane	0.3007	0.0226	17.4756	0.0542	2.0517	0.0350
i-Pentane	0.1117	0.0084	8.0822	0.0250	0.8855	0.0151
n-Pentane	0.1021	0.0077	7.3858	0.0228	0.8009	0.0137
n-Hexane	0.1533	0.0115	13.2133	0.0410	1.3853	0.0233
3-Mpentane	0.0652	0.0049	5.6192	0.0174	0.5783	0.0098
Benzene	0.0000	0.0000	0.0000	0.0000	0.0000	0.0000
Cyclohexane	0.0000	0.0000	0.0000	0.0000	0.0000	0.0000
23-Mpentane	0.0000	0.0000	0.0000	0.0000	0.0000	0.0000
n-Heptane	0.0363	0.0027	3.6414	0.0113	0.3830	0.0062
Toluene	0.0000	0.0000	0.0000	0.0000	0.0000	0.0000
3-Moctane	0.0000	0.0000	0.0000	0.0000	0.0000	0.0000
n-Octane	0.0304	0.0023	3.4703	0.0108	0.3369	0.0057
o-Xylene	0.0000	0.0000	0.0000	0.0000	0.0000	0.0000
n-Nonane	0.0099	0.0007	1.2655	0.0039	0.1203	0.0021
n-Decane	0.0024	0.0002	0.3419	0.0011	0.0319	0.0005
H2O	0.1774	0.0133	3.1951	0.0099	0.2192	0.0037
Oxygen	0.0066	0.0005	0.2106	0.0007	0.0127	0.0002
Argon	0.0000	0.0000	0.0000	0.0000	0.0000	0.0000
TEGlycol	0.0002	0.0000	0.0266	0.0001	0.0018	0.0000
Total	13.2854	1.0000	322.5943	1.0000	58.6670	1.0000

Vapour Phase

Phase Fraction 1.000

COMPONENTS	MOLAR FLOW (lbmole/hr)	MOLE FRACTION	MASS FLOW (lb/hr)	MASS FRACTION	LIQUID VOLUME FLOW (barrel/day)	LIQUID VOLUME FRACTION
Nitrogen	0.0838	0.0063	2.3464	0.0073	0.1992	0.0034
CO2	0.0373	0.0028	1.6405	0.0051	0.1361	0.0023
Methane	9.0520	0.6813	145.2188	0.4502	33.2125	0.5661
Ethane	2.1190	0.1595	63.7172	0.1975	12.2663	0.2091
Propane	0.8688	0.0654	38.3124	0.1188	5.1776	0.0883

Material Stream: Flash Gas flow to VRU (conti

Fluid Package: Basis-1
Property Package: Peng-Robinson

COMPOSITION

Vapour Phase (continued)

Phase Fraction 1.000

COMPONENTS	MOLAR FLOW (lbmole/hr)	MOLE FRACTION	MASS FLOW (lb/hr)	MASS FRACTION	LIQUID VOLUME FLOW (barrel/day)	LIQUID VOLUME FRACTION
i-Butane	0.1285	0.0097	7.4677	0.0231	0.9099	0.0155
n-Butane	0.3007	0.0226	17.4758	0.0542	2.0517	0.0350
i-Pentane	0.1117	0.0084	8.0622	0.0250	0.8855	0.0151
n-Pentane	0.1021	0.0077	7.3656	0.0228	0.8009	0.0137
n-Hexane	0.1533	0.0115	13.2133	0.0410	1.3653	0.0233
3-Mpentane	0.0652	0.0049	5.6192	0.0174	0.5763	0.0098
Benzene	0.0000	0.0000	0.0000	0.0000	0.0000	0.0000
Cyclohexane	0.0000	0.0000	0.0000	0.0000	0.0000	0.0000
23-Mpentane	0.0000	0.0000	0.0000	0.0000	0.0000	0.0000
n-Heptane	0.0333	0.0027	3.8414	0.0113	0.3630	0.0062
Toluene	0.0000	0.0000	0.0000	0.0000	0.0000	0.0000
3-Moctane	0.0000	0.0000	0.0000	0.0000	0.0000	0.0000
n-Octane	0.0304	0.0023	3.4703	0.0108	0.3369	0.0057
o-Xylene	0.0000	0.0000	0.0000	0.0000	0.0000	0.0000
n-Nonane	0.0099	0.0007	1.2655	0.0039	0.1203	0.0021
n-Decane	0.0024	0.0002	0.3419	0.0011	0.0319	0.0005
H2O	0.1774	0.0133	3.1951	0.0099	0.2192	0.0037
Oxygen	0.0866	0.0065	0.2106	0.0007	0.0127	0.0002
Argon	0.0000	0.0000	0.0000	0.0000	0.0000	0.0000
TEGlycol	0.0002	0.0000	0.0296	0.0001	0.0018	0.0000
Total	13.2854	1.0000	322.5943	1.0000	58.6670	1.0000

Liquid Phase

Phase Fraction 0.0000

COMPONENTS	MOLAR FLOW (lbmole/hr)	MOLE FRACTION	MASS FLOW (lb/hr)	MASS FRACTION	LIQUID VOLUME FLOW (barrel/day)	LIQUID VOLUME FRACTION
Nitrogen	0.0000	0.0000	0.0000	0.0000	0.0000	0.0000
CO2	0.0000	0.0000	0.0000	0.0000	0.0000	0.0000
Methane	0.0000	0.0038	0.0000	0.0005	0.0000	0.0013
Ethane	0.0000	0.0059	0.0000	0.0015	0.0000	0.0030
Propane	0.0000	0.0098	0.0000	0.0038	0.0000	0.0053
i-Butane	0.0000	0.0041	0.0000	0.0021	0.0000	0.0028
n-Butane	0.0000	0.0139	0.0000	0.0070	0.0000	0.0085
i-Pentane	0.0000	0.0143	0.0000	0.0090	0.0000	0.0101
n-Pentane	0.0000	0.0160	0.0000	0.0113	0.0000	0.0127
n-Hexane	0.0000	0.0995	0.0000	0.0747	0.0000	0.0794
3-Mpentane	0.0000	0.0333	0.0000	0.0250	0.0000	0.0263
Benzene	0.0000	0.0000	0.0000	0.0000	0.0000	0.0000
Cyclohexane	0.0000	0.0000	0.0000	0.0000	0.0000	0.0000
23-Mpentane	0.0000	0.0000	0.0000	0.0000	0.0000	0.0000
n-Heptane	0.0000	0.0831	0.0000	0.0725	0.0000	0.0744
Toluene	0.0000	0.0000	0.0000	0.0000	0.0000	0.0000
3-Moctane	0.0000	0.0000	0.0000	0.0000	0.0000	0.0000
n-Octane	0.0000	0.2439	0.0000	0.2425	0.0000	0.2424
o-Xylene	0.0000	0.0000	0.0000	0.0000	0.0000	0.0000
n-Nonane	0.0000	0.2633	0.0000	0.2940	0.0000	0.2877
n-Decane	0.0000	0.2067	0.0000	0.2560	0.0000	0.2463
H2O	0.0000	0.0002	0.0000	0.0000	0.0000	0.0000
Oxygen	0.0000	0.0000	0.0000	0.0000	0.0000	0.0000

Material Stream: Flash Gas flow to VRU (conti

Fluid Package: Basis-1
Property Package: Peng-Robinson

COMPOSITION

Liquid Phase (continued)

Phase Fraction 0.0000

COMPONENTS	MOLAR FLOW (lbmole/hr)	MOLE FRACTION	MASS FLOW (lb/hr)	MASS FRACTION	LIQUID VOLUME FLOW (barrel/day)	LIQUID VOLUME FRACTION
Argon	0.0000	0.0000	0.0000	0.0000	0.0000	0.0000
TEGlycol	0.0000	0.0000	0.0000	0.0000	0.0000	0.0000
Total	0.0000	1.0000	0.0000	1.0000	0.0000	1.0000

Aqueous Phase

Phase Fraction 0.0000

COMPONENTS	MOLAR FLOW (lbmole/hr)	MOLE FRACTION	MASS FLOW (lb/hr)	MASS FRACTION	LIQUID VOLUME FLOW (barrel/day)	LIQUID VOLUME FRACTION
Nitrogen	0.0000	0.0000	0.0000	0.0000	0.0000	0.0000
CO2	0.0000	0.0000	0.0000	0.0000	0.0000	0.0000
Methane	0.0000	0.0000	0.0000	0.0000	0.0000	0.0000
Ethane	0.0000	0.0000	0.0000	0.0000	0.0000	0.0000
Propane	0.0000	0.0000	0.0000	0.0000	0.0000	0.0000
i-Butane	0.0000	0.0000	0.0000	0.0000	0.0000	0.0000
n-Butane	0.0000	0.0000	0.0000	0.0000	0.0000	0.0000
i-Pentane	0.0000	0.0000	0.0000	0.0000	0.0000	0.0000
n-Pentane	0.0000	0.0000	0.0000	0.0000	0.0000	0.0000
n-Hexane	0.0000	0.0000	0.0000	0.0000	0.0000	0.0000
3-Mpentane	0.0000	0.0000	0.0000	0.0000	0.0000	0.0000
Benzene	0.0000	0.0000	0.0000	0.0000	0.0000	0.0000
Cyclohexane	0.0000	0.0000	0.0000	0.0000	0.0000	0.0000
23-Mpentane	0.0000	0.0000	0.0000	0.0000	0.0000	0.0000
n-Heptane	0.0000	0.0000	0.0000	0.0000	0.0000	0.0000
Toluene	0.0000	0.0000	0.0000	0.0000	0.0000	0.0000
3-Moctane	0.0000	0.0000	0.0000	0.0000	0.0000	0.0000
n-Octane	0.0000	0.0000	0.0000	0.0000	0.0000	0.0000
o-Xylene	0.0000	0.0000	0.0000	0.0000	0.0000	0.0000
n-Nonane	0.0000	0.0000	0.0000	0.0000	0.0000	0.0000
n-Decane	0.0000	0.0000	0.0000	0.0000	0.0000	0.0000
H2O	0.0000	0.9968	0.0000	0.9742	0.0000	0.9771
Oxygen	0.0000	0.0000	0.0000	0.0000	0.0000	0.0000
Argon	0.0000	0.0000	0.0000	0.0000	0.0000	0.0000
TEGlycol	0.0000	0.0032	0.0000	0.0258	0.0000	0.0229
Total	0.0000	1.0000	0.0000	1.0000	0.0000	1.0000

aspen

MARKWEST HYDROCARBON, IN
Burlington, MA
USA

Case Name:	SHERWOOD HYSYS SUMMER CASE.HSC
Unit Set:	NewUser
Date/Time:	Fri May 04 13:52:40 2012

Material Stream: Gas Flow to VRU

Fluid Package: Basis-1
Property Package: Peng-Robinson

CONDITIONS

	Overall	Vapour Phase	Aqueous Phase	Liquid Phase
Vapour / Phase Fraction	1.0000	1.0000	0.0000	0.0000
Temperature: (F)	93.05	93.05	93.05	93.05
Pressure: (psia)	14.70	14.70	14.70	14.70
Molar Flow (MMSCFD)	0.1140	0.1140	0.0000	0.0000
Mass Flow (lb/hr)	273.4	273.4	0.0000	0.0000
Std Ideal Liq Vol Flow (barrel/day)	51.59	51.59	0.0000	0.0000
Molar Enthalpy (Btu/lbmole)	-3.834e+004	-3.834e+004	-1.228e+005	-1.194e+005
Molar Entropy (Btu/lbmole-F)	46.08	46.08	13.37	45.93
Heat Flow (Btu/hr)	-4.601e+005	-4.601e+005	0.0000	0.0000
Liq Vol Flow @Std Cond (barrel/day)	—	—	0.0000	0.0000

PROPERTIES

	Overall	Vapour Phase	Aqueous Phase	Liquid Phase
Molecular Weight	21.84	21.84	18.02	131.5
Molar Density (lbmole/ft3)	2.487e-003	2.487e-003	3.467	0.3175
Mass Density (lb/ft3)	5.431e-002	5.431e-002	62.47	41.76
Act. Volume Flow (barrel/day)	2.152e+004	2.152e+004	0.0000	0.0000
Mass Enthalpy (Btu/lb)	-1756	-1756	-6814	-908.3
Mass Entropy (Btu/lb-F)	2.110	2.110	0.7423	0.3493
Heat Capacity (Btu/lbmole-F)	10.53	10.53	18.56	66.94
Mass Heat Capacity (Btu/lb-F)	0.4820	0.4820	1.030	0.5090
Lower Heating Value (Btu/lbmole)	4.289e+005	4.289e+005	14.13	2.526e+006
Mass Lower Heating Value (Btu/lb)	1.964e+004	1.964e+004	0.7843	1.921e+004
Phase Fraction [Vol. Basis]	—	1.000	—	—
Phase Fraction [Mass Basis]	2.122e-314	1.000	0.0000	0.0000
Partial Pressure of CO2 (psia)	4.274e-002	—	—	—
Cost Based on Flow (Cost/s)	0.0000	0.0000	0.0000	0.0000
Act. Gas Flow (ACFM)	83.91	83.91	—	—
Avg. Liq. Density (lbmole/ft3)	1.038	1.038	3.458	0.3431
Specific Heat (Btu/lbmole-F)	10.53	10.53	18.56	66.94
Std. Gas Flow (MMSCFD)	0.1140	0.1140	0.0000	0.0000
Std. Ideal Liq. Mass Density (lb/ft3)	22.66	22.66	62.30	45.12
Act. Liq. Flow (USGPM)	0.0000	—	0.0000	—
Z Factor	—	0.9962	7.146e-004	7.803e-003
Watson K	17.87	17.87	8.756	12.67
User Property	—	—	—	—
Partial Pressure of H2S (psia)	0.0000	—	—	—
Cp/(Cp - R)	1.233	1.233	1.120	1.031
Cp/Cv	1.237	1.237	1.152	1.031
Heat of Vap. (Btu/lbmole)	9253	—	—	—
Kinematic Viscosity (cSt)	12.78	12.78	0.7340	0.9207
Liq. Mass Density (Std. Cond) (lb/ft3)	—	—	63.33	45.36
Liq. Vol. Flow (Std. Cond) (barrel/day)	—	—	0.0000	0.0000
Liquid Fraction	0.0000	0.0000	1.000	1.000
Molar Volume (ft3/lbmole)	402.1	402.1	0.2884	3.150
Mass Heat of Vap. (Btu/lb)	423.7	—	—	—
Phase Fraction [Molar Basis]	1.0000	1.0000	0.0000	0.0000
Surface Tension (dyne/cm)	—	—	70.55	21.39
Thermal Conductivity (Btu/hr-ft-F)	1.725e-002	1.725e-002	0.3603	7.361e-002
Viscosity (cP)	1.112e-002	1.112e-002	0.7344	0.6158
Cv (Semi-Ideal) (Btu/lbmole-F)	8.540	8.540	16.58	64.96

Licensed to: MARKWEST HYDROCARBON, IN
* Specified by user.

Material Stream: Gas Flow to VRU (continued)

Fluid Package: Basis-1
Property Package: Peng-Robinson

PROPERTIES

		Overall	Vapour Phase	Aqueous Phase	Liquid Phase	
Mass Cv (Semi-Ideal)	(Btu/lb-F)	0.3911	0.3911	0.9202	0.4039	
Cv	(Btu/lbmole-F)	8.509	8.509	16.11	84.95	
Mass Cv	(Btu/lb-F)	0.3897	0.3897	0.8942	0.4930	
Cv (Ent. Method)	(Btu/lbmole-F)	—	—	15.83	—	
Mass Cv (Ent. Method)	(Btu/lb-F)	—	—	0.8784	—	
Cp/Cv (Ent. Method)		—	—	1.173	—	
Reid VP at 37.8 C	(psia)	—	—	63.44	4.550	
True VP at 37.8 C	(psia)	2767	2767	11.67	18.83	
Liq. Vol. Flow - Sum(Std. Cond)	barrel/day	0.0000	0.0000	0.0000	0.0000	
Viscosity Index		—	—	-0.8476	-1.849	

COMPOSITION

Overall Phase

Vapour Fraction 1.0000

COMPONENTS	MOLAR FLOW (lbmole/hr)	MOLE FRACTION	MASS FLOW (lb/hr)	MASS FRACTION	LIQUID VOLUME FLOW (barrel/day)	LIQUID VOLUME FRACTION
Nitrogen	0.0834	0.0067	2.3361	0.0085	0.1984	0.0038
CO2	0.0364	0.0029	1.6028	0.0059	0.1330	0.0026
Methane	8.8432	0.7062	141.8713	0.5189	32.4466	0.6289
Ethane	1.8913	0.1510	56.8724	0.2080	10.9486	0.2122
Propane	0.6222	0.0497	27.4359	0.1003	3.7077	0.0719
i-Butane	0.0810	0.0049	3.5455	0.0130	0.4320	0.0084
n-Butane	0.1226	0.0098	7.1284	0.0261	0.8369	0.0162
i-Pentane	0.0297	0.0024	2.1422	0.0078	0.2353	0.0046
n-Pentane	0.0248	0.0020	1.7927	0.0066	0.1949	0.0038
n-Hexane	0.0382	0.0029	3.1236	0.0114	0.3228	0.0063
3-Mpentane	0.0147	0.0012	1.2709	0.0046	0.1303	0.0025
Benzene	0.0000	0.0000	0.0000	0.0000	0.0000	0.0000
Cyclohexane	0.0000	0.0000	0.0000	0.0000	0.0000	0.0000
23-Mpentane	0.0000	0.0000	0.0000	0.0000	0.0000	0.0000
n-Heptane	0.0153	0.0012	1.5296	0.0056	0.1525	0.0030
Toluene	0.0000	0.0000	0.0000	0.0000	0.0000	0.0000
3-Moctane	0.0000	0.0000	0.0000	0.0000	0.0000	0.0000
n-Octane	0.0331	0.0026	3.7856	0.0138	0.3675	0.0071
o-Xylene	0.0000	0.0000	0.0000	0.0000	0.0000	0.0000
n-Nonane	0.0306	0.0025	3.9497	0.0144	0.3755	0.0073
n-Decane	0.0220	0.0018	3.1316	0.0115	0.2927	0.0057
H2O	0.6482	0.0518	11.6766	0.0427	0.8011	0.0155
Oxygen	0.0065	0.0005	0.2087	0.0008	0.0126	0.0002
Argon	0.0000	0.0000	0.0000	0.0000	0.0000	0.0000
TEGlycol	0.0001	0.0000	0.0216	0.0001	0.0013	0.0000
Total	12.5218	1.0000	273.4252	1.0000	51.5898	1.0000

Vapour Phase

Phase Fraction 1.000

COMPONENTS	MOLAR FLOW (lbmole/hr)	MOLE FRACTION	MASS FLOW (lb/hr)	MASS FRACTION	LIQUID VOLUME FLOW (barrel/day)	LIQUID VOLUME FRACTION
Nitrogen	0.0834	0.0067	2.3361	0.0085	0.1984	0.0038
CO2	0.0364	0.0029	1.6028	0.0059	0.1330	0.0026
Methane	8.8432	0.7062	141.8713	0.5189	32.4466	0.6289
Ethane	1.8913	0.1510	56.8724	0.2080	10.9486	0.2122
Propane	0.6222	0.0497	27.4359	0.1003	3.7077	0.0719

Material Stream: Gas Flow to VRU (continued)

Fluid Package: Basis-1
Property Package: Peng-Robinson

COMPOSITION

Vapour Phase (continued)

Phase Fraction 1.000

COMPONENTS	MOLAR FLOW (lbmole/hr)	MOLE FRACTION	MASS FLOW (lb/hr)	MASS FRACTION	LIQUID VOLUME FLOW (barrel/day)	LIQUID VOLUME FRACTION
i-Butane	0.0610	0.0049	3.5455	0.0130	0.4320	0.0084
n-Butane	0.1226	0.0098	7.1284	0.0261	0.8369	0.0162
i-Pentane	0.0297	0.0024	2.1422	0.0078	0.2353	0.0046
n-Pentane	0.0248	0.0020	1.7927	0.0066	0.1949	0.0038
n-Hexane	0.0362	0.0029	3.1236	0.0114	0.3228	0.0063
3-Mpentane	0.0147	0.0012	1.2709	0.0046	0.1303	0.0025
Benzene	0.0000	0.0000	0.0000	0.0000	0.0000	0.0000
Cyclohexane	0.0000	0.0000	0.0000	0.0000	0.0000	0.0000
23-Mpentane	0.0000	0.0000	0.0000	0.0000	0.0000	0.0000
n-Heptane	0.0153	0.0012	1.5298	0.0056	0.1525	0.0030
Toluene	0.0000	0.0000	0.0000	0.0000	0.0000	0.0000
3-Moctane	0.0000	0.0000	0.0000	0.0000	0.0000	0.0000
n-Octane	0.0331	0.0026	3.7856	0.0138	0.3675	0.0071
o-Xylene	0.0000	0.0000	0.0000	0.0000	0.0000	0.0000
n-Nonane	0.0308	0.0025	3.9497	0.0144	0.3755	0.0073
n-Decane	0.0220	0.0018	3.1316	0.0115	0.2927	0.0057
H2O	0.6482	0.0518	11.6766	0.0427	0.8011	0.0155
Oxygen	0.0065	0.0005	0.2087	0.0008	0.0126	0.0002
Argon	0.0000	0.0000	0.0000	0.0000	0.0000	0.0000
TEGlycol	0.0001	0.0000	0.0216	0.0001	0.0013	0.0000
Total	12.5218	1.0000	273.4252	1.0000	51.5896	1.0000

Aqueous Phase

Phase Fraction 0.0000

COMPONENTS	MOLAR FLOW (lbmole/hr)	MOLE FRACTION	MASS FLOW (lb/hr)	MASS FRACTION	LIQUID VOLUME FLOW (barrel/day)	LIQUID VOLUME FRACTION
Nitrogen	0.0000	0.0000	0.0000	0.0000	0.0000	0.0000
CO2	0.0000	0.0000	0.0000	0.0000	0.0000	0.0000
Methane	0.0000	0.0000	0.0000	0.0000	0.0000	0.0000
Ethane	0.0000	0.0000	0.0000	0.0000	0.0000	0.0000
Propane	0.0000	0.0000	0.0000	0.0000	0.0000	0.0000
i-Butane	0.0000	0.0000	0.0000	0.0000	0.0000	0.0000
n-Butane	0.0000	0.0000	0.0000	0.0000	0.0000	0.0000
i-Pentane	0.0000	0.0000	0.0000	0.0000	0.0000	0.0000
n-Pentane	0.0000	0.0000	0.0000	0.0000	0.0000	0.0000
n-Hexane	0.0000	0.0000	0.0000	0.0000	0.0000	0.0000
3-Mpentane	0.0000	0.0000	0.0000	0.0000	0.0000	0.0000
Benzene	0.0000	0.0000	0.0000	0.0000	0.0000	0.0000
Cyclohexane	0.0000	0.0000	0.0000	0.0000	0.0000	0.0000
23-Mpentane	0.0000	0.0000	0.0000	0.0000	0.0000	0.0000
n-Heptane	0.0000	0.0000	0.0000	0.0000	0.0000	0.0000
Toluene	0.0000	0.0000	0.0000	0.0000	0.0000	0.0000
3-Moctane	0.0000	0.0000	0.0000	0.0000	0.0000	0.0000
n-Octane	0.0000	0.0000	0.0000	0.0000	0.0000	0.0000
o-Xylene	0.0000	0.0000	0.0000	0.0000	0.0000	0.0000
n-Nonane	0.0000	0.0000	0.0000	0.0000	0.0000	0.0000
n-Decane	0.0000	0.0000	0.0000	0.0000	0.0000	0.0000
H2O	0.0000	1.0000	0.0000	0.9999	0.0000	0.9999
Oxygen	0.0000	0.0000	0.0000	0.0000	0.0000	0.0000

Material Stream: Gas Flow to VRU (continued)

Fluid Package: Basis-1
Property Package: Peng-Robinson

COMPOSITION

Aqueous Phase (continued)

Phase Fraction 0.0000

COMPONENTS	MOLAR FLOW (lbmole/hr)	MOLE FRACTION	MASS FLOW (lb/hr)	MASS FRACTION	LIQUID VOLUME FLOW (barrel/day)	LIQUID VOLUME FRACTION
Argon	0.0000	0.0000	0.0000	0.0000	0.0000	0.0000
TEGlycol	0.0000	0.0000	0.0000	0.0001	0.0000	0.0001
Total	0.0000	1.0000	0.0000	1.0000	0.0000	1.0000

Liquid Phase

Phase Fraction 0.0000

COMPONENTS	MOLAR FLOW (lbmole/hr)	MOLE FRACTION	MASS FLOW (lb/hr)	MASS FRACTION	LIQUID VOLUME FLOW (barrel/day)	LIQUID VOLUME FRACTION
Nitrogen	0.0000	0.0000	0.0000	0.0000	0.0000	0.0000
CO2	0.0000	0.0000	0.0000	0.0000	0.0000	0.0000
Methane	0.0000	0.0043	0.0000	0.0005	0.0000	0.0013
Ethane	0.0000	0.0048	0.0000	0.0011	0.0000	0.0022
Propane	0.0000	0.0055	0.0000	0.0018	0.0000	0.0026
i-Butane	0.0000	0.0014	0.0000	0.0009	0.0000	0.0008
n-Butane	0.0000	0.0038	0.0000	0.0017	0.0000	0.0021
i-Pentane	0.0000	0.0023	0.0000	0.0013	0.0000	0.0015
n-Pentane	0.0000	0.0025	0.0000	0.0014	0.0000	0.0016
n-Hexane	0.0000	0.0118	0.0000	0.0078	0.0000	0.0085
3-Mpentane	0.0000	0.0039	0.0000	0.0026	0.0000	0.0028
Benzene	0.0000	0.0000	0.0000	0.0000	0.0000	0.0000
Cyclohexane	0.0000	0.0000	0.0000	0.0000	0.0000	0.0000
23-Mpentane	0.0000	0.0000	0.0000	0.0000	0.0000	0.0000
n-Heptane	0.0000	0.0153	0.0000	0.0117	0.0000	0.0123
Toluene	0.0000	0.0000	0.0000	0.0000	0.0000	0.0000
3-Moctane	0.0000	0.0000	0.0000	0.0000	0.0000	0.0000
n-Octane	0.0000	0.1018	0.0000	0.0884	0.0000	0.0906
o-Xylene	0.0000	0.0000	0.0000	0.0000	0.0000	0.0000
n-Nonane	0.0000	0.2767	0.0000	0.2699	0.0000	0.2709
n-Decane	0.0000	0.5649	0.0000	0.6112	0.0000	0.6029
H2O	0.0000	0.0009	0.0000	0.0001	0.0000	0.0001
Oxygen	0.0000	0.0000	0.0000	0.0000	0.0000	0.0000
Argon	0.0000	0.0000	0.0000	0.0000	0.0000	0.0000
TEGlycol	0.0000	0.0000	0.0000	0.0000	0.0000	0.0000
Total	0.0000	1.0000	0.0000	1.0000	0.0000	1.0000

aspen

MARKWEST HYDROCARBON, IN
Burlington, MA
USA

Case Name:	SHERWOOD HYSYS WINTER CASE.HSC
Unit Set:	NewUser
Date/Time:	Fri May 04 13:53:49 2012

Material Stream: Gas Flow to VRU

Fluid Package: Basis-1
Property Package: Peng-Robinson

CONDITIONS

	Overall	Vapour Phase	Liquid Phase	Aqueous Phase
Vapour / Phase Fraction	1.0000	1.0000	0.0000	0.0000
Temperature: (F)	24.36	24.36	24.36	24.36
Pressure: (psia)	14.70	14.70	14.70	14.70
Molar Flow (MMSCFD)	0.1415	0.1415	0.0000	0.0000
Mass Flow (lb/hr)	408.1	408.1	0.0000	0.0000
Std Ideal Liq Vol Flow (barrel/day)	71.75	71.75	0.0000	0.0000
Molar Enthalpy (Btu/lbmole)	-3.801e+004	-3.801e+004	-9.937e+004	-1.247e+005
Molar Entropy (Btu/lbmole-F)	44.13	44.13	21.34	10.80
Heat Flow (Btu/hr)	-5.905e+005	-5.905e+005	0.0000	0.0000
Liq Vol Flow @Std Cond (barrel/day)	—	—	0.0000	0.0000

PROPERTIES

	Overall	Vapour Phase	Liquid Phase	Aqueous Phase
Molecular Weight	26.27	26.27	100.6	18.35
Molar Density (lbmole/ft3)	2.852e-003	2.852e-003	0.4393	3.613
Mass Density (lb/ft3)	7.491e-002	7.491e-002	44.19	64.46
Act. Volume Flow (barrel/day)	2.329e+004	2.329e+004	0.0000	0.0000
Mass Enthalpy (Btu/lb)	-1447	-1447	-987.9	-6795
Mass Entropy (Btu/lb-F)	1.680	1.680	0.2121	0.5886
Heat Capacity (Btu/lbmole-F)	11.35	11.35	47.72	19.09
Mass Heat Capacity (Btu/lb-F)	0.4321	0.4321	0.4744	1.041
Lower Heating Value (Btu/lbmole)	5.323e+005	5.323e+005	1.943e+006	3494
Mass Lower Heating Value (Btu/lb)	2.026e+004	2.026e+004	1.932e+004	190.4
Phase Fraction [Vol. Basis]	—	1.000	—	—
Phase Fraction [Mass Basis]	2.122e-314	1.000	0.0000	0.0000
Partial Pressure of CO2 (psia)	3.800e-002	—	—	—
Cost Based on Flow (Cost/s)	0.0000	0.0000	0.0000	0.0000
Act. Gas Flow (ACFM)	90.80	90.80	—	—
Avg. Liq. Density (lbmole/ft3)	0.9257	0.9257	0.4249	3.404
Specific Heat (Btu/lbmole-F)	11.35	11.35	47.72	19.09
Std. Gas Flow (MMSCFD)	0.1415	0.1415	0.0000	0.0000
Std. Ideal Liq. Mass Density (lb/ft3)	24.32	24.32	42.74	62.45
Act. Liq. Flow (USGPM)	0.0000	—	—	0.0000
Z Factor	—	0.9921	6.441e-003	8.052e-004
Watson K	16.89	16.89	12.74	8.813
User Property	—	—	—	—
Partial Pressure of H2S (psia)	0.0000	—	—	—
Cp/(Cp - R)	1.212	1.212	1.043	1.116
Cp/Cv	1.220	1.220	1.043	1.122
Heat of Vap. (Btu/lbmole)	8690	—	—	—
Kinematic Viscosity (cSt)	7.973	7.973	0.8416	1.765
Liq. Mass Density (Std. Cond) (lb/ft3)	—	—	43.13	63.54
Liq. Vol. Flow (Std. Cond) (barrel/day)	—	—	0.0000	0.0000
Liquid Fraction	0.0000	0.0000	1.000	1.000
Molar Volume (ft3/lbmole)	350.7	350.7	2.276	0.2846
Mass Heat of Vap. (Btu/lb)	330.8	—	—	—
Phase Fraction [Molar Basis]	1.0000	1.0000	0.0000	0.0000
Surface Tension (dyne/cm)	—	—	21.75	76.40
Thermal Conductivity (Btu/hr-ft-F)	1.335e-002	1.335e-002	7.263e-002	0.3210
Viscosity (cP)	9.567e-003	9.567e-003	0.5957	1.822
Cv (Semi-Ideal) (Btu/lbmole-F)	9.364	9.364	45.74	17.10

Licensed to: MARKWEST HYDROCARBON, IN
* Specified by user.

Material Stream: Gas Flow to VRU (continued)

Fluid Package: Basis-1
Property Package: Peng-Robinson

PROPERTIES

		Overall	Vapour Phase	Liquid Phase	Aqueous Phase	
Mass Cv (Semi-Ideal)	(Btu/lb-F)	0.3565	0.3565	0.4547	0.9324	
Cv	(Btu/lbmole-F)	9.307	9.307	45.74	17.02	
Mass Cv	(Btu/lb-F)	0.3543	0.3543	0.4547	0.9278	
Cv (Ent. Method)	(Btu/lbmole-F)	—	—	—	—	
Mass Cv (Ent. Method)	(Btu/lb-F)	—	—	—	—	
Cp/Cv (Ent. Method)		—	—	—	—	
Reid VP at 37.8 C	(psia)	—	—	14.20	0.7142	
True VP at 37.8 C	(psia)	1986	1986	28.04	1.190	
Liq. Vol. Flow - Sum(Std. Cond)	(barrel/day)	0.0000	0.0000	0.0000	0.0000	
Viscosity Index		—	—	-1.609	-1.383e-002	

COMPOSITION

Overall Phase

Vapour Fraction 1.0000

COMPONENTS	MOLAR FLOW (lbmole/hr)	MOLE FRACTION	MASS FLOW (lb/hr)	MASS FRACTION	LIQUID VOLUME FLOW (barrel/day)	LIQUID VOLUME FRACTION
Nitrogen	0.0847	0.0054	2.3719	0.0058	0.2014	0.0028
CO2	0.0402	0.0026	1.7680	0.0043	0.1467	0.0020
Methane	9.5726	0.6161	153.5715	0.3763	35.1225	0.4895
Ethane	2.7521	0.1771	82.7564	0.2028	15.9315	0.2220
Propane	1.5299	0.0985	67.4620	0.1653	9.1189	0.1271
I-Butane	0.2720	0.0175	15.8107	0.0387	1.9265	0.0269
n-Butane	0.6252	0.0402	36.3413	0.0890	4.2686	0.0595
I-Pentane	0.1858	0.0120	13.4093	0.0329	1.4727	0.0205
n-Pentane	0.1519	0.0098	10.9583	0.0269	1.1915	0.0166
n-Hexane	0.1457	0.0094	12.5530	0.0308	1.2971	0.0181
3-Mpentane	0.0872	0.0043	5.7926	0.0142	0.5940	0.0083
Benzene	0.0000	0.0000	0.0000	0.0000	0.0000	0.0000
Cyclohexane	0.0000	0.0000	0.0000	0.0000	0.0000	0.0000
23-Mpentane	0.0000	0.0000	0.0000	0.0000	0.0000	0.0000
n-Heptane	0.0229	0.0015	2.2964	0.0056	0.2289	0.0032
Toluene	0.0000	0.0000	0.0000	0.0000	0.0000	0.0000
3-Moctane	0.0000	0.0000	0.0000	0.0000	0.0000	0.0000
n-Octane	0.0114	0.0007	1.3068	0.0032	0.1269	0.0018
o-Xylene	0.0000	0.0000	0.0000	0.0000	0.0000	0.0000
n-Nonane	0.0021	0.0001	0.2724	0.0007	0.0259	0.0004
n-Decane	0.0003	0.0000	0.0479	0.0001	0.0045	0.0001
H2O	0.0662	0.0043	1.1934	0.0029	0.0819	0.0011
Oxygen	0.0067	0.0004	0.2148	0.0005	0.0129	0.0002
Argon	0.0000	0.0000	0.0000	0.0000	0.0000	0.0000
TEGlycol	0.0000	0.0000	0.0013	0.0000	0.0001	0.0000
Total	15.5370	1.0000	408.1280	1.0000	71.7485	1.0000

Vapour Phase

Phase Fraction 1.000

COMPONENTS	MOLAR FLOW (lbmole/hr)	MOLE FRACTION	MASS FLOW (lb/hr)	MASS FRACTION	LIQUID VOLUME FLOW (barrel/day)	LIQUID VOLUME FRACTION
Nitrogen	0.0847	0.0054	2.3719	0.0058	0.2014	0.0028
CO2	0.0402	0.0026	1.7680	0.0043	0.1467	0.0020
Methane	9.5726	0.6161	153.5715	0.3763	35.1225	0.4895
Ethane	2.7521	0.1771	82.7564	0.2028	15.9315	0.2220
Propane	1.5299	0.0985	67.4620	0.1653	9.1189	0.1271

Material Stream: Gas Flow to VRU (continued)

Fluid Package: Basis-1
Property Package: Peng-Robinson

COMPOSITION

Vapour Phase (continued)

Phase Fraction 1.000

COMPONENTS	MOLAR FLOW (lbmole/hr)	MOLE FRACTION	MASS FLOW (lb/hr)	MASS FRACTION	LIQUID VOLUME FLOW (barrel/day)	LIQUID VOLUME FRACTION
i-Butane	0.2720	0.0175	15.8107	0.0387	1.9265	0.0269
n-Butane	0.6252	0.0402	36.3413	0.0890	4.2666	0.0595
i-Pentane	0.1858	0.0120	13.4093	0.0328	1.4727	0.0206
n-Pentane	0.1519	0.0098	10.9583	0.0269	1.1915	0.0166
n-Hexane	0.1457	0.0094	12.5530	0.0308	1.2971	0.0181
3-Mpentane	0.0672	0.0043	5.7926	0.0142	0.5940	0.0083
Benzene	0.0000	0.0000	0.0000	0.0000	0.0000	0.0000
Cyclohexane	0.0000	0.0000	0.0000	0.0000	0.0000	0.0000
23-Mpentane	0.0000	0.0000	0.0000	0.0000	0.0000	0.0000
n-Heptane	0.0229	0.0015	2.2984	0.0056	0.2289	0.0032
Toluene	0.0000	0.0000	0.0000	0.0000	0.0000	0.0000
3-Moctane	0.0000	0.0000	0.0000	0.0000	0.0000	0.0000
n-Octane	0.0114	0.0007	1.3068	0.0032	0.1288	0.0018
o-Xylene	0.0000	0.0000	0.0000	0.0000	0.0000	0.0000
n-Nonane	0.0021	0.0001	0.2724	0.0007	0.0259	0.0004
n-Decane	0.0003	0.0000	0.0479	0.0001	0.0045	0.0001
H2O	0.0362	0.0043	1.1934	0.0029	0.0819	0.0011
Oxygen	0.0067	0.0004	0.2148	0.0005	0.0129	0.0002
Argon	0.0000	0.0000	0.0000	0.0000	0.0000	0.0000
TEGlycol	0.0000	0.0000	0.0013	0.0000	0.0001	0.0000
Total	15.6370	1.0000	408.1280	1.0000	71.7485	1.0000

Liquid Phase

Phase Fraction 0.0000

COMPONENTS	MOLAR FLOW (lbmole/hr)	MOLE FRACTION	MASS FLOW (lb/hr)	MASS FRACTION	LIQUID VOLUME FLOW (barrel/day)	LIQUID VOLUME FRACTION
Nitrogen	0.0000	0.0000	0.0000	0.0000	0.0000	0.0000
CO2	0.0000	0.0001	0.0000	0.0000	0.0000	0.0000
Methane	0.0000	0.0040	0.0000	0.0006	0.0000	0.0015
Ethane	0.0000	0.0090	0.0000	0.0027	0.0000	0.0052
Propane	0.0000	0.0234	0.0000	0.0103	0.0000	0.0139
i-Butane	0.0000	0.0127	0.0000	0.0073	0.0000	0.0089
n-Butane	0.0000	0.0442	0.0000	0.0255	0.0000	0.0300
i-Pentane	0.0000	0.0395	0.0000	0.0283	0.0000	0.0311
n-Pentane	0.0000	0.0465	0.0000	0.0333	0.0000	0.0362
n-Hexane	0.0000	0.1834	0.0000	0.1571	0.0000	0.1623
3-Mpentane	0.0000	0.0846	0.0000	0.0663	0.0000	0.0567
Benzene	0.0000	0.0000	0.0000	0.0000	0.0000	0.0000
Cyclohexane	0.0000	0.0000	0.0000	0.0000	0.0000	0.0000
23-Mpentane	0.0000	0.0000	0.0000	0.0000	0.0000	0.0000
n-Heptane	0.0000	0.1135	0.0000	0.1131	0.0000	0.1127
Toluene	0.0000	0.0000	0.0000	0.0000	0.0000	0.0000
3-Moctane	0.0000	0.0000	0.0000	0.0000	0.0000	0.0000
n-Octane	0.0000	0.2221	0.0000	0.2522	0.0000	0.2448
o-Xylene	0.0000	0.0000	0.0000	0.0000	0.0000	0.0000
n-Nonane	0.0000	0.1517	0.0000	0.1935	0.0000	0.1839
n-Decane	0.0000	0.0853	0.0000	0.1207	0.0000	0.1128
H2O	0.0000	0.0001	0.0000	0.0000	0.0000	0.0000
Oxygen	0.0000	0.0000	0.0000	0.0000	0.0000	0.0000

Material Stream: Gas Flow to VRU (continued)

Fluid Package: Basis-1
Property Package: Peng-Robinson

COMPOSITION

Liquid Phase (continued)

Phase Fraction 0.0000

COMPONENTS	MOLAR FLOW (lbmole/hr)	MOLE FRACTION	MASS FLOW (lb/hr)	MASS FRACTION	LIQUID VOLUME FLOW (barrel/day)	LIQUID VOLUME FRACTION
Argon	0.0000	0.0000	0.0000	0.0000	0.0000	0.0000
TEGlycol	0.0000	0.0000	0.0000	0.0000	0.0000	0.0000
Total	0.0000	1.0000	0.0000	1.0000	0.0000	1.0000

Aqueous Phase

Phase Fraction 0.0000

COMPONENTS	MOLAR FLOW (lbmole/hr)	MOLE FRACTION	MASS FLOW (lb/hr)	MASS FRACTION	LIQUID VOLUME FLOW (barrel/day)	LIQUID VOLUME FRACTION
Nitrogen	0.0000	0.0000	0.0000	0.0000	0.0000	0.0000
CO2	0.0000	0.0000	0.0000	0.0000	0.0000	0.0000
Methane	0.0000	0.0000	0.0000	0.0000	0.0000	0.0000
Ethane	0.0000	0.0000	0.0000	0.0000	0.0000	0.0000
Propane	0.0000	0.0000	0.0000	0.0000	0.0000	0.0000
i-Butane	0.0000	0.0000	0.0000	0.0000	0.0000	0.0000
n-Butane	0.0000	0.0000	0.0000	0.0000	0.0000	0.0000
i-Pentane	0.0000	0.0000	0.0000	0.0000	0.0000	0.0000
n-Pentane	0.0000	0.0000	0.0000	0.0000	0.0000	0.0000
n-Hexane	0.0000	0.0000	0.0000	0.0000	0.0000	0.0000
3-Mpentane	0.0000	0.0000	0.0000	0.0000	0.0000	0.0000
Benzene	0.0000	0.0000	0.0000	0.0000	0.0000	0.0000
Cyclohexane	0.0000	0.0000	0.0000	0.0000	0.0000	0.0000
23-Mpentane	0.0000	0.0000	0.0000	0.0000	0.0000	0.0000
n-Heptane	0.0000	0.0000	0.0000	0.0000	0.0000	0.0000
Toluene	0.0000	0.0000	0.0000	0.0000	0.0000	0.0000
3-Moctane	0.0000	0.0000	0.0000	0.0000	0.0000	0.0000
n-Octane	0.0000	0.0000	0.0000	0.0000	0.0000	0.0000
o-Xylene	0.0000	0.0000	0.0000	0.0000	0.0000	0.0000
n-Nonane	0.0000	0.0000	0.0000	0.0000	0.0000	0.0000
n-Decane	0.0000	0.0000	0.0000	0.0000	0.0000	0.0000
H2O	0.0000	0.9975	0.0000	0.9795	0.0000	0.9818
Oxygen	0.0000	0.0000	0.0000	0.0000	0.0000	0.0000
Argon	0.0000	0.0000	0.0000	0.0000	0.0000	0.0000
TEGlycol	0.0000	0.0025	0.0000	0.0205	0.0000	0.0181
Total	0.0000	1.0000	0.0000	1.0000	0.0000	1.0000

VOC Flare Test Calculations

Date samples taken: 9-24-2009
Samples taken by: Shamrock Gas Analysis
Technician: Hal Brennan
Calculation results by: Tim Rickel

Test One, High Fire w/Propelene & Methane mix

Inlet stream, cylinder # 178 1705.916 BTU/cu ft
Outlet stream, cylinder # 8354 13.116 BTU/cu ft
Rate: 1100 scfh (air), corrected for gravity: 1093.13 scfh
Sp.Gr. 1.0126

(1705.916 - 13.116) 1093.13 = 1,850,450.464 BTU/hr

1 - (13.116 / 1705.916) = 99.227 % destruction

Test Two, Low Fire w/Propelene & Methane mix

Inlet stream, cylinder # 8967 2162.963 BTU/cu ft
Outlet stream, cylinder # 7032 3.426 BTU/cu ft
Rate: 310 scfh (air), corrected for gravity: 271.2 scfh
Sp.Gr. 1.3064

(2162.963 - 3.426) 271.2 = 585,666.434 BTU/hr

1 - (3.426 / 2162.963) = 99.842 % destruction

Test Three, High Fire Methane

Inlet stream, cylinder # 7782 1042.095 BTU/cu ft
Outlet stream, cylinder # 9130 5.772 BTU/cu ft
Rate: 1550 scfh (air), corrected for gravity: 2002.71 scfh
Sp.Gr. 0.599

(1042.095 - 5.772) 2002.71 = 2,075,454.435 BTU/hr

1 - (5.772 / 1042.095) = 99.446 % destruction

Test Four, Field Test, Tank Vapors

Inlet stream, cylinder # 9232 2776.4 BTU/cu ft
Outlet stream, cylinder # 9300 5.7 BTU/cu ft
Rate: 761.2 scfh (gas)
Sp.Gr. 1.656

(2776.4 - 5.7) 761.2 = 2,109,056.84 BTU/hr

1 - (5.7 / 2776.4) = 99.795 % destruction

Tim Rickel 9-28-09

SUPERIOR FABRICATION INC.

		Line Pressure..	12 OZ
Operator.....	NOT/REC	Line Temp.....	80 F
Lease.....	HIGH FIRE INL W/PROP	Cylinder #.....	178
Station.....	SHOP	Sampled By.....	MAL BRENNAN
Sample Type....	C6+	Date Run.....	09/28/2009
Date Pulled....	09/24/2009	Analyzed By....	BRENNAN
Eff. Date.....	09/01/2009	Lab Ref #.....	K02849

Physical Constants per GPA 2145-09
Calculations per GPA 2172-96
@ 14.7300 psia and 60 deg F

	MOL%	GPM	BTU
Nitrogen	0.523	0.058	0.000
Carbon Dioxide	0.505	0.086	0.000
Methane	52.216	8.850	528.602
Ethane	0.876	0.234	15.538
Propane	45.536	12.542	1148.382
ISO-Butane	0.059	0.019	1.923
N-Butane	0.111	0.035	3.630
ISO-Pentane	0.050	0.018	2.005
N-Pentane	0.048	0.017	1.929
Hexanes+	0.076	0.033	3.907
TOTALS	100.000	21.893	1705.916

GROSS HEATING VALUE @ 14.7300 PSI

DRY	WET	
1705.916	1676.157	Ideal
1718.577	1689.389	Real

Z Factor:	0.9926328
Specific Gravity (Ideal):	1.0126
Specific Gravity (Real):	1.0197

GASOLINE CONTENT (GPM)

Ethane & Heavier	12.899
Propane & Heavier	12.665
Butane & Heavier	0.123
Pentane & Heavier	0.069

Remarks:
SAMPLE C #1

* Ideal Gas Heating Value Per Real Cubic Feet

SUPERIOR FABRICATION INC.

		Line Pressure..	0 OZ
Operator.....	NOT/REC	Line Temp.....	754 F
Lease.....	HIGH FIRE EXH W/PROP	Cylinder #.....	8354
Station.....	SHOP	Sampled By.....	MAL BRENNAN
Sample Type....	C6+	Date Run.....	09/28/2009
Date Pulled....	09/24/2009	Analyzed By....	BRENNAN
Eff. Date.....	09/01/2009	Lab Ref #.....	K02853

Physical Constants per GPA 2145-09
Calculations per GPA 2172-96
@ 14.6500 psia and 60 deg F

	MOL%	GPM	BTU
Nitrogen	95.542	10.452	0.000
Carbon Dioxide	4.108	0.697	0.000
Methane	0.000	0.000	0.000
Ethane	0.000	0.000	0.000
Propane	0.155	0.042	3.888
ISO-Butane	0.000	0.000	0.000
N-Butane	0.014	0.004	0.455
ISO-Pentane	0.021	0.008	0.838
N-Pentane	0.022	0.008	0.879
Hexanes+	0.138	0.060	7.056
TOTALS	100.000	11.271	13.116

GROSS HEATING VALUE @ 14.6500 PSI

DRY	WET	
13.116	12.887	Ideal
13.121	12.894	Real

Z Factor:	0.9995982
Specific Gravity (Ideal):	0.9947
Specific Gravity (Real):	0.9947

GASOLINE CONTENT (GPM)

Ethane & Heavier	0.122
Propane & Heavier	0.122
Butane & Heavier	0.080
Pentane & Heavier	0.075

Remarks:
SAMPLE C #2

* Ideal Gas Heating Value Per Real Cubic Feet

SUPERIOR FABRICATION INC.

		Line Pressure..	0.5000 OZ
Operator.....	NOT/REC	Line Temp.....	82 F
Lease.....	LOW FIRE INL W/PROP.	Cylinder #.....	8967
Station.....	SHOP	Sampled By.....	MAL BRENNAN
Sample Type....	C6+	Date Run.....	09/28/2009
Date Pulled....	09/24/2009	Analyzed By....	BRENNAN
Eff. Date.....	09/01/2009	Lab Ref #.....	K02851

Physical Constants per GPA 2145-09
Calculations per GPA 2172-96
@ 14.6500 psia and 60 deg F

	MOL%	GPM	BTU
Nitrogen	0.288	0.032	0.000
Carbon Dioxide	0.220	0.037	0.000
Methane	22.130	3.730	222.813
Ethane	0.457	0.122	8.062
Propane	76.689	21.008	1923.532
ISO-Butane	0.032	0.010	1.037
N-Butane	0.060	0.019	1.951
ISO-Pentane	0.035	0.013	1.396
N-Pentane	0.034	0.012	1.359
Hexanes+	0.055	0.024	2.812
TOTALS	100.000	25.006	2162.963

GROSS HEATING VALUE @ 14.6500 PSI

DRY	WET	
2162.963	2125.232	Ideal
2190.932	2153.806	Real

Z Factor:	0.9872341
Specific Gravity (Ideal):	1.3064
Specific Gravity (Real):	1.3227

GASOLINE CONTENT (GPM)

Ethane & Heavier	21.207
Propane & Heavier	21.086
Butane & Heavier	0.078
Pentane & Heavier	0.049

Remarks:
SAMPLE A #2

* Ideal Gas Heating Value Per Real Cubic Feet

SUPERIOR FABRICATION INC.

		Line Pressure..	0 OZ
Operator.....	NOT/REC	Line Temp.....	276 F
Lease.....	LOW FIRE EXH W/PROP.	Cylinder #.....	7032
Station.....	SHOP	Sampled By.....	MAL BRENNAN
Sample Type....	C6+	Date Run.....	09/28/2009
Date Pulled....	09/24/2009	Analyzed By....	BRENNAN
Eff. Date.....	09/01/2009	Lab Ref #.....	K02854

Physical Constants per GPA 2145-09
Calculations per GPA 2172-96
@ 14.7300 psia and 60 deg F

	MOL%	GPM	BTU
Nitrogen	97.881	10.766	0.000
Carbon Dioxide	2.042	0.348	0.000
Methane	0.000	0.000	0.000
Ethane	0.000	0.000	0.000
Propane	0.000	0.000	0.000
ISO-Butane	0.000	0.000	0.000
N-Butane	0.008	0.003	0.262
ISO-Pentane	0.017	0.006	0.682
N-Pentane	0.017	0.006	0.683
Hexanes+	0.035	0.015	1.799
TOTALS	100.000	11.144	3.426

GROSS HEATING VALUE @ 14.7300 PSI

DRY	WET	
3.426	3.366	Ideal
3.427	3.368	Real

Z Factor:	0.9996644
Specific Gravity (Ideal):	0.9799
Specific Gravity (Real):	0.9798

GASOLINE CONTENT (GPM)

Ethane & Heavier	0.030
Propane & Heavier	0.030
Butane & Heavier	0.030
Pentane & Heavier	0.028

Remarks:
SAMPLE A #1

* Ideal Gas Heating Value Per Real Cubic Feet

SUPERIOR FABRICATION INC.

Operator.....	NOT/REC	Line Pressure..	19.5000 OZ
Lease.....	HIGH FIRE INL-HYDRO.	Line Temp.....	78.5000 F
Station.....	SHOP	Cylinder #.....	7782
Sample Type....	C6+	Sampled By.....	MAL BRENNAN
Date Pulled....	09/24/2009	Date Run.....	09/28/2009
Eff. Date.....	09/01/2009	Analyzed By....	BRENNAN
		Lab Ref #.....	K02850

Physical Constants per GPA 2145-09
Calculations per GPA 2172-96
@ 14.7300 psia and 60 deg F

	MOL%	GPM	BTU
Nitrogen	1.241	0.136	0.000
Carbon Dioxide	0.791	0.135	0.000
Methane	94.446	16.007	956.112
Ethane	1.869	0.500	33.152
Propane	0.808	0.223	20.377
ISO-Butane	0.157	0.051	5.117
N-Butane	0.301	0.095	9.842
ISO-Pentane	0.114	0.042	4.572
N-Pentane	0.099	0.036	3.978
Hexanes+	0.174	0.076	8.945
TOTALS	100.000	17.301	1042.095

GROSS HEATING VALUE @ 14.7300 PSI

DRY	WET	
1042.095	1023.917	Ideal
1044.446	1026.564	Real

Z Factor:	0.9977488
Specific Gravity (Ideal):	0.5990
Specific Gravity (Real):	0.6001

GASOLINE CONTENT (GPM)

Ethane & Heavier	1.022
Propane & Heavier	0.522
Butane & Heavier	0.300
Pentane & Heavier	0.153

Remarks:
SAMPLE B #1

* Ideal Gas Heating Value Per Real Cubic Feet

SUPERIOR FABRICATION INC.

Operator.....	NOT/REC	Line Pressure..	0 PSI
Lease.....	HIGH FIRE EXH-HYDRO.	Line Temp.....	711 F
Station.....	SHOP	Cylinder #.....	9130
Sample Type....	C6+	Sampled By.....	MAL BRENNAN
Date Pulled....	09/24/2009	Date Run.....	09/28/2009
Eff. Date.....	09/01/2009	Analyzed By....	BRENNAN
		Lab Ref #.....	K02852

Physical Constants per GPA 2145-09
Calculations per GPA 2172-96
@ 14.7300 psia and 60 deg F

	MOL%	GPM	BTU
Nitrogen	94.109	10.351	0.000
Carbon Dioxide	5.753	0.982	0.000
Methane	0.000	0.000	0.000
Ethane	0.000	0.000	0.000
Propane	0.022	0.006	0.555
ISO-Butane	0.000	0.000	0.000
N-Butane	0.014	0.004	0.458
ISO-Pentane	0.021	0.008	0.842
N-Pentane	0.022	0.008	0.884
Hexanes+	0.059	0.026	3.033
TOTALS	100.000	11.384	5.772

GROSS HEATING VALUE @ 14.7300 PSI

DRY	WET	
5.772	5.671	Ideal
5.774	5.675	Real

Z Factor:	0.9995759
Specific Gravity (Ideal):	1.0012
Specific Gravity (Real):	1.0012

GASOLINE CONTENT (GPM)

Ethane & Heavier	0.052
Propane & Heavier	0.052
Butane & Heavier	0.046
Pentane & Heavier	0.041

Remarks:
SAMPLE B #2

* Ideal Gas Heating Value Per Real Cubic Feet

SHAMROCK GAS ANALYSIS
1100 South Madden
Shamrock, Texas 79079
(806)256-3249

TANK 4A

GAS ANALYSIS REPORT NO: G5083GX/K **DATE:** 15-Sep-09

FOR: Superior Fabrication, INC.
Attn: Ronnie Brickman
10885 Exhibition Rd.
Canadian, Texas
79014

SAMPLE IDENTIFICATION

COMP: Chesapeake
FIELD: Canadian Area
LEASE: Zybach #14-24 Tank VOC
STA. #: Not/Rec

SAMPLE DATA

DATE: 11-Sep-09 **BY:** M. Brennan
PRES: 15 VAC **psig** **TEMP:** 92 **Deg. F.** **FIELD GRAVITY:** Not/Rec
FLOW: Not/Rec **MCF/D** **DIFF:** Not/Rec **IN. Hg** **DEW POINT** Not/Rec **LBS H2O**
REMARKS: Extended Analysis

CYL # : 9232 **LAB # :** G5083GX/K - FT0388

COMPONENT ANALYSIS

COMPONENTS		MOL PERCENT	GPM @ 14.730 psia
CARBON DIOXIDE	(CO2)	0.18 .04	
NITROGEN	(N2)	0.08	
METHANE	(C1)	10.09	
ETHANE	(C2)	17.76	4.747
PROPANE	(C3)	30.31	8.344
ISOBUTANE	(IC4)	7.42	2.426
N-BUTANE	(NC4)	17.70	5.579
ISOPENTANE	(IC5)	5.13	1.878
N-PENTANE	(NC5)	5.17	1.873
HEXANES PLUS	(C6+)	6.17	2.459
TOTALS		100.00	

MOLECULAR WEIGHT: 47.966

ETHANE+ GPM: 27.306
PROPANE+ GPM: 22.559
ISO-PENTANE+ GPM: 6.210

Compressibility Factor (Z): 0.9778

Specific Gravity @ 60 Deg. F. (real): 1.656

BTU / CU. FT. @ 60 Deg. F., 14.730 **PSIA (REAL):**
DRY 2776.4
WET 2728.1

SHAMROCK GAS ANALYSIS
1100 South Madden
Shamrock, Texas 79079
(806)256-3249

Flare

4B

GAS ANALYSIS REPORT NO: G5082GX/H **DATE:** 15-Sep-09

FOR: Superior Fabrication, INC.
Attn: Ronnie Brickman
10885 Exhibition Rd.
Canadian, Texas
79014

SAMPLE IDENTIFICATION

COMP: Chesapeake
FIELD: Canadian Area
LEASE: Zybach #14-24 Tank VOC Flair Stack
STA. #: Not/Rec

SAMPLE DATA

DATE: 11-Sep-09 **BY:** M. Brennan
PRES: 15 VAC psig **TEMP:** 170 Deg. F. **FIELD GRAVITY:** Not/Rec
FLOW: Not/Rec MCF/D **DIFF:** Not/Rec IN. Hg **DEW POINT** Not/Rec **LBS H2O**
REMARKS: Extended Analysis

CYL # : 9300 **LAB # :** G5082GX/H - FT0388

COMPONENT ANALYSIS

COMPONENTS		MOL PERCENT	GPM @ 14.730 psia
CARBON DIOXIDE	(CO2)	0.79	
NITROGEN	(N2)	99.09	
METHANE	(C1)	0.00	
ETHANE	(C2)	0.00	0.000
PROPANE	(C3)	0.01	0.002
ISOBUTANE	(IC4)	0.00	0.001
N-BUTANE	(NC4)	0.01	0.004
ISOPENTANE	(IC5)	0.01	0.003
N-PENTANE	(NC5)	0.01	0.003
HEXANES PLUS	(C6+)	0.08	0.034
TOTALS		100.00	

		ETHANE+ GPM:	0.047
		PROPANE+ GPM:	0.047
MOLECULAR WEIGHT:	28.210	ISO-PENTANE+ GPM:	0.040
		Compressibility Factor (Z):	0.9997
		Specific Gravity @ 60 Deg. F. (real):	0.974
BTU / CU. FT. @ 60 Deg. F.,	14.730 PSIA (REAL):	DRY	5.7
		WET	5.6

Andrews, Edward S

From: Nathan Wheldon <Nathan.Wheldon@markwest.com>
Sent: Thursday, July 02, 2015 10:11 AM
To: Andrews, Edward S; Dale Gable
Subject: Dehy Flare
Attachments: SFI Condensers for Ohio.pdf; SFI Flare Volume Chart.pdf; SFI VOC Test Data.pdf

Ed, please see attached the vendor information I have from SFI for the dehydrator flare at Sherwood. This flare is the 72" model.

From: Andrews, Edward S [mailto:Edward.S.Andrews@wv.gov]
Sent: Thursday, July 02, 2015 5:24 AM
To: Dale Gable
Cc: Nathan Wheldon
Subject: RE: Refrigeration Compressors

Good Answer. I'll make sure is it noted in the write up why they are excluded from the LDAR of Subpart OOOO.

Thanks,
Ed

ID # 17-741
Reg R13-2511C
Company Markwest
Facility Sherwood Initials SKE

From: Dale Gable [mailto:Dale.Gable@markwest.com]
Sent: Thursday, July 02, 2015 7:22 AM
To: Andrews, Edward S
Subject: Refrigeration Compressors

Good Morning Edward,

Just a quick FYI on our Refrigeration Compressors at Sherwood. All of the compressors are screw-type compressors that are not defined as "Centrifugal Compressors", per 40 CFR 60.5380 and 60.5430.

Regards,

Dale

Entire Document
NON-CONFIDENTIAL

6/29/1915
1

Calculating the concentration of NOx, CO, and VOC based on the mass rate limits for the Caterpillar G3616 engine (CM-1001 & CM-1002) at Sherwood Gas Plant

$$Q_{exhaust} := 32100 \cdot \frac{ft^3}{min}$$ Caterpillar Engine DM8608-02.

$$T_{exhaust} := (856 + 460) \cdot R$$ Temperature listed in Caterpillar DM8608-02

$$T_{standard} := (20 + 273) \cdot K$$ Standard temperature is 20 C

ID # 17-34
Reg R13-2941C
Company Markwest
Facility Sherwood Initials

$$Q_{standard} := \frac{Q_{exhaust} \cdot T_{standard}}{T_{exhaust}}$$ Correcting the actual exhaust to standard temperature.

$$Q_{standard} = 1.286 \cdot 10^4 \cdot \frac{ft^3}{min}$$ Flow Rate of the exhaust for CM-1001 & CM-1002 at standard temperature.

$$M_{NOx} := 46.01 \cdot \frac{lb}{lb \cdot mole}$$

Entire Document
NON-CONFIDENTIAL

$$M_{CO} := 28.01 \cdot \frac{lb}{lb \cdot mole}$$

$$M_{VOC} := 44.10 \cdot \frac{lb}{lb \cdot mole}$$

$$GasLaw := 385.1 \cdot 10^6 \cdot \frac{ft^3}{lb \cdot mole}$$ Ideal Gas Law says 1 mole of ideal gas will occupy 385.1 ft^3 at 14.7 psia.

$$O2_{correction} := \left(\frac{20.9 - 15}{20.9 - 0}\right)$$ Correction factor to correct the concentration to 15 O2. NSPS engine testing requires the concentration of the pollutant to be corrected to 15% O2.

$$O2_{correction} = 0.282$$

Given the mass rate limits of NOx, CO, VOC for engines CM-1001 & CM-1002 from R13-2014B.

$$NOx_{mass} := 5.22 \cdot \frac{lb}{hr}$$ Assumed these limits are at zero oxygen content

$$CO_{mass} := 1.46 \cdot \frac{lb}{hr}$$

$$VOC_{mass} := 1.67 \cdot \frac{lb}{hr}$$

$$NOx_{conc} := \frac{NOx_{mass}}{Q_{standard}} \cdot \frac{GasLaw}{M_{NOx}}$$

$$NOx_{conc} = 56.605$$ Concentration of NOx at 15% O2 that equates to the mass rate of 5.22 lb/hr, in terms of ppm per dry volume.

$$CO_{conc} := \frac{CO_{mass}}{Q_{standard}} \cdot \frac{GasLaw}{M_{CO}}$$

$$CO_{conc} = 26.006$$ Concentration of CO at 15% O2 that equates to the mass rate of 1.46 lb/hr, in terms of ppm per dry volume.

$$VOC_{conc} := \frac{VOC_{mass}}{Q_{standard}} \cdot \frac{GasLaw}{M_{VOC}}$$

$$VOC_{conc} = 18.893$$ Concentration of VOC at 15% O2 that equates to the mass rate of 1.67 lb/hr, in terms of ppm per dry volume.

Calculating the concentration of NOx, CO, and VOC based on the mass rate limits for the Caterpillar G3608 engine (CM-2001) at Sherwood Gas Plant

$Q_{exhaust} := 16098 \cdot \frac{ft^3}{min}$ Caterpillar Engine 3608,

$T_{exhaust} := (857 + 460) \cdot R$ Temperature listed in Caterpillar G3608

$T_{standard} := (20 + 273) \cdot K$ Standard temperature is 20 C

$Q_{standard} := \frac{Q_{exhaust} \cdot T_{standard}}{T_{exhaust}}$ Correcting the actual exhaust to standard temperature.

$Q_{standard} = 6.447 \cdot 10^3 \cdot \frac{ft^3}{min}$ Flow Rate of the exhaust for CM-1001 & CM-1002 at standard temperature.

Given the mass rate limits of NOx, CO, VOC for engines CM-2001 from R13-2814B.

$NOx_{mass} := 2.61 \cdot \frac{lb}{hr}$ Assumed these limits are at zero oxygen content.

$CO_{mass} := 0.73 \cdot \frac{lb}{hr}$

$VOC_{mass} := 1.46 \cdot \frac{lb}{hr}$

$NOx_{conc} := \frac{NOx_{mass}}{Q_{standard}} \cdot \frac{GasLaw}{M_{NOx}}$

$NOx_{conc} = 56.479$ Concentration of NOx at 15% O2 that equates to the mass rate of 2.61 lb/hr, in terms of ppm per dry volume.

$$CO_{conc} := \frac{CO_{mass}}{Q_{standard}} \cdot \frac{GasLaw}{M_{CO}}$$

$CO_{conc} = 25.948$ Concentration of CO at 15% O2 that equates to the mass rate of 0.73 lb/hr, in terms of ppm per dry volume.

$$VOC_{conc} := \frac{VOC_{mass}}{Q_{standard}} \cdot \frac{GasLaw}{M_{VOC}}$$

$VOC_{conc} = 32.962$ Concentration of VOC at 15% O2 that equates to the mass rate of 1.46 lb/hr, in terms of ppm per dry volume.

Andrews, Edward S

From: Jarrett, James F
Sent: Thursday, June 25, 2015 10:32 AM
To: Andrews, Edward S
Subject: MarkWest Sherwood Dehy and Flare
Attachments: Sherwood Dehy and Flare.png

6-23-2015 Dehy info.
Actual flash tank 147 F and 71 psig
3 KIMRAY 45020PV TEG glycol pumps rated at 7.5 gpm each (total max. 22.5 gpm).
Actual TEG flow gage 18 gpm.
The enclosed ground flare on still vent was not operating. The pilot was lite but the flare burners were not on. The BTU content of the still vent gas may not be enough to ignite the burners. I'm wondering if they should have supplemental fuel to maintain the BTU so the flare is reducing the still vent VOC/HAP emissions?

The condensate/produced water storage tanks VRU was not operating during the inspection. The facility said when the electric compressors go down the VRU goes down. I told them the VRU needs to operate 98% of the time to meet permit condition 9.1.1.

ID # 12-34
Reg R13-2514C
Company MarkWest
Facility Sherwood Initials EAA

Entire Document
NON-CONFIDENTIAL

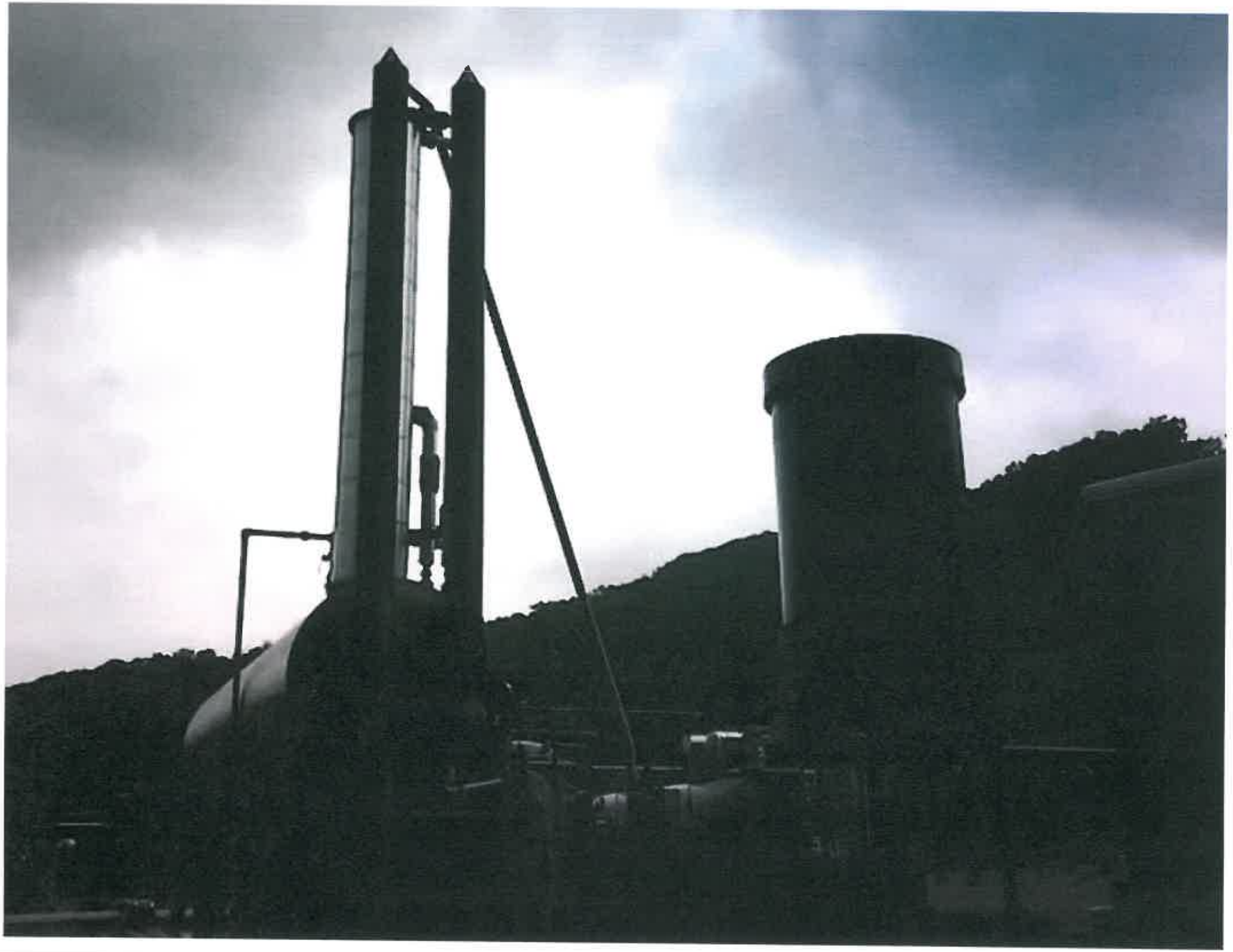

Andrews, Edward S

From: Andrews, Edward S
Sent: Wednesday, June 24, 2015 2:35 PM
To: Jarrett, James F
Subject: FW: MarkWest Sherwood Gas Plant - Dehy
Attachments: Sherwood GlyCalc Run.pdf

ID # 17-34
Reg R13-2514C
Company MarkWest
Facility Sherwood Initials SK

From: Nathan Wheldon [mailto:Nathan.Wheldon@markwest.com]
Sent: Friday, June 05, 2015 12:41 PM
To: Andrews, Edward S
Subject: RE: MarkWest Sherwood Gas Plant - Dehy

Ed, I thought I'd save you some time on this. Attached is the GRI-GlyCalc run that was initially submitted with the Sherwood Plant. The base assumptions and analysis still hold correct on the operation of the dehydration system. Earlier Dale had sent you information on the glycol pumps but only one of the three pumps can run at any given time with the other two as backup so the actual recirculation rate in this model is still correct.

I spoke with our plant engineer about the new flare. The new flare is indeed a "piggy-back" model. The piggy-back is non-assisted and it is used for low flow rates. The main stack is air-assisted. There is a meter in the line to the flare that measures volumes, the valve will be turned to the piggy-back under normal circumstances but when the volume through the line increases to a certain set level the valve will switch and the flow will be diverted to the bigger flare. By using this approach we can still meet our combustion efficiency with the low-flow streams and be smokeless and achieve our efficiency on the high flow streams.

Please let me know if you have any further questions.

Nathan.

From: Andrews, Edward S [mailto:Edward.S.Andrews@wv.gov]
Sent: Friday, May 22, 2015 7:28 AM
To: Dale Gable
Cc: Nathan Wheldon
Subject: RE: MarkWest Sherwood Gas Plant - Dehy

Dale: To ensure the unit is has a federally enforceable less than 1.0 tpy of benzene to be excluded from the HH MACT (production dehy MACT), I need to create estimate the potential HAPs from the flash gas going to the reboiler. I'll run Glycalc to predict this rate if you could send an extended wet gas analysis. Plus, I need to know the temperature and pressure that the flash tank is operating at.

Is there any stripping gas used on this unit?

Dose the reboiler have a pilot light and is it monitored?

Should you have any questions about this, please contact me.

Entire Document
NON-CONFIDENTIAL

Sincerely,

Edward S. Andrews, P.E.
Engineer

West Virginia Department of Environmental Protection
Division of Air Quality
601 57th Street, SE
Charleston, WV 25304
304.926.0499 ext. 1214

From: Dale Gable [mailto:Dale.Gable@markwest.com]
Sent: Friday, May 22, 2015 9:14 AM
To: Andrews, Edward S; Nathan Wheldon
Subject: RE: MarkWest Sherwood Gas Plant - Dehy

Andrew and Nathan,

In response to your questions:

1. Is the unit equipped with a flash tank? If so, where does the flash gas route to?
    - The unit is equipped with a flash tank
    - The flash gas goes to the Glycol Reboiler
2. What is the fuel source of the reboiler (flash gas or process gas)?
    - The plant fuel gas system – Every gas fueled device at Sherwood is fueled from the fuel gas header
3. What is the maximum glycol circulation rate for the system?
    - There are three (3) glycol pumps in the unit
    - Each pump uses one (1) quart of glycol/stroke @ 28 strokes/minute
    - Equals seven (7) gallons/minute/pump maximum
    - Total of 21 gallons/minute maximum glycol circulation

I hope that this answers your questions. If you need additional information, please contact me at your convenience.

Regards,
Dale

From: Andrews, Edward S [mailto:Edward.S.Andrews@wv.gov]
Sent: Friday, May 22, 2015 8:43 AM
To: Nathan Wheldon; Dale Gable
Subject: MarkWest Sherwood Gas Plant - Dehy

I have been trying to fix up the Sherwood Gas plant. There is not a whole lot of information on the dehy in the original file.

Questions I have are as follows:

Is the unit equipped with a flash tank? If so, where is the flash gas route to?

What is the fuel source of the reboiler (flash gas or process gas)?

What is the maximum glycol circulation rate for the system?

Should you have any questions about this e-mail, please contact me.

Sincerely,

Edward S. Andrews, P.E.
Engineer
West Virginia Department of Environmental Protection
Division of Air Quality
601 57th Street, SE
Charleston, WV 25304
304.926.0499 ext. 1214

GRI-GLYCalc VERSION 4.0 - AGGREGATE CALCULATIONS REPORT

Case Name: Sherwood
File Name: C:\Temp\From Thumb Drive\GLYcalc\Sherwood 11-23-11.ddf
Date: June 05, 2015

DESCRIPTION:

Description: One Sherwood 120 mmscf/d Dehy Unit

Annual Hours of Operation: 8760.0 hours/yr

EMISSIONS REPORTS:

CONTROLLED REGENERATOR EMISSIONS

Component	lbs/hr	lbs/day	tons/yr
Methane	1.9228	46.148	8.4221
Ethane	0.8275	19.860	3.6245
Propane	0.5091	12.217	2.2296
Isobutane	0.0938	2.252	0.4111
n-Butane	0.2760	6.624	1.2088
Isopentane	0.0801	1.924	0.3511
n-Pentane	0.1235	2.963	0.5408
n-Hexane	0.1213	2.912	0.5315
Cyclohexane	0.0448	1.075	0.1962
Other Hexanes	0.1129	2.711	0.4947
Heptanes	0.1638	3.932	0.7176
Benzene	0.0400	0.960	0.1752
Toluene	0.1189	2.853	0.5207
Xylenes	0.0555	1.331	0.2430
C8+ Heavies	0.2775	6.660	1.2155
Total Emissions	4.7676	114.423	20.8822
Total Hydrocarbon Emissions	4.7676	114.423	20.8822
Total VOC Emissions	2.0173	48.415	8.8357
Total HAP Emissions	0.3357	8.057	1.4704
Total BTEX Emissions	0.2144	5.145	0.9389

UNCONTROLLED REGENERATOR EMISSIONS

Component	lbs/hr	lbs/day	tons/yr
Methane	96.1423	2307.415	421.1032
Ethane	41.3753	993.007	181.2238
Propane	25.4525	610.860	111.4820
Isobutane	4.6924	112.617	20.5526
n-Butane	13.7992	331.181	60.4405
Isopentane	4.0075	96.180	17.5528
n-Pentane	6.1732	148.157	27.0387
n-Hexane	6.0674	145.618	26.5754
Cyclohexane	2.2396	53.750	9.8095
Other Hexanes	5.6474	135.537	24.7355
Heptanes	8.1917	196.601	35.8797
Benzene	1.9999	47.997	8.7595
Toluene	5.9443	142.663	26.0361
Xylenes	2.7736	66.565	12.1482

n-Butane	2.00%	98.00%
Isopentane	2.00%	98.00%
n-Pentane	2.00%	98.00%
n-Hexane	2.00%	98.00%
Cyclohexane	2.00%	98.00%
Other Hexanes	2.00%	98.00%
Heptanes	2.00%	98.00%
Benzene	2.00%	98.00%
Toluene	2.00%	98.00%
Xylenes	2.00%	98.00%
C8+ Heavies	2.00%	98.00%

ABSORBER

NOTE: Because the Calculated Absorber Stages was below the minimum allowed, GRI-GLYCalc has set the number of Absorber Stages to 1.25 and has calculated a revised Dry Gas Dew Point.

Calculated Absorber Stages:	1.25
Calculated Dry Gas Dew Point:	4.35 lbs. H2O/MMSCF
Temperature:	99.0 deg. F
Pressure:	1000.0 psig
Dry Gas Flow Rate:	120.0000 MMSCF/day
Glycol Losses with Dry Gas:	4.0388 lb/hr
Wet Gas Water Content:	Saturated
Calculated Wet Gas Water Content:	57.02 lbs. H2O/MMSCF
Specified Lean Glycol Recirc. Ratio:	3.00 gal/lb H2O

Component	Remaining in Dry Gas	Absorbed in Glycol
Water	7.62%	92.38%
Carbon Dioxide	99.85%	0.15%
Nitrogen	99.99%	0.01%
Methane	99.99%	0.01%
Ethane	99.97%	0.03%
Propane	99.96%	0.04%
Isobutane	99.95%	0.05%
n-Butane	99.93%	0.07%
Isopentane	99.94%	0.06%
n-Pentane	99.92%	0.08%
n-Hexane	99.89%	0.11%
Cyclohexane	99.48%	0.52%
Other Hexanes	99.91%	0.09%
Heptanes	99.82%	0.18%
Benzene	95.19%	4.81%
Toluene	93.93%	6.07%
Xylenes	90.13%	9.87%
C8+ Heavies	99.65%	0.35%

FLASH TANK

Flash Control:	Recycle/recompression
Flash Temperature:	70.0 deg. F
Flash Pressure:	85.0 psig

	Left in	Removed in

Flow Rate: 5.01e+006 scfh

Component	Conc. (vol%)	Loading (lb/hr)
Water	1.20e-001	2.85e+002
Carbon Dioxide	1.29e-001	7.48e+002
Nitrogen	3.98e-001	1.47e+003
Methane	7.45e+001	1.58e+005
Ethane	1.52e+001	6.03e+004
Propane	5.32e+000	3.09e+004
Isobutane	6.46e-001	4.96e+003
n-Butane	1.64e+000	1.26e+004
Isopentane	3.91e-001	3.72e+003
n-Pentane	5.21e-001	4.96e+003
n-Hexane	3.32e-001	3.77e+003
Cyclohexane	3.60e-002	3.99e+002
Other Hexanes	3.65e-001	4.15e+003
Heptanes	2.67e-001	3.53e+003
Benzene	4.00e-003	4.12e+001
Toluene	7.99e-003	9.72e+001
Xylenes	2.00e-003	2.80e+001
C8+ Heavies	1.52e-001	3.41e+003
Total Components	100.00	2.93e+005

DRY GAS STREAM

Temperature: 99.00 deg. F
Pressure: 1014.70 psia
Flow Rate: 5.00e+006 scfh

Component	Conc. (vol%)	Loading (lb/hr)
Water	9.17e-003	2.18e+001
Carbon Dioxide	1.29e-001	7.47e+002
Nitrogen	3.98e-001	1.47e+003
Methane	7.46e+001	1.58e+005
Ethane	1.52e+001	6.03e+004
Propane	5.32e+000	3.09e+004
Isobutane	6.47e-001	4.95e+003
n-Butane	1.64e+000	1.25e+004
Isopentane	3.91e-001	3.72e+003
n-Pentane	5.22e-001	4.96e+003
n-Hexane	3.32e-001	3.77e+003
Cyclohexane	3.58e-002	3.97e+002
Other Hexanes	3.65e-001	4.14e+003
Heptanes	2.67e-001	3.52e+003
Benzene	3.81e-003	3.92e+001
Toluene	7.52e-003	9.13e+001
Xylenes	1.80e-003	2.52e+001
C8+ Heavies	1.51e-001	3.40e+003
Total Components	100.00	2.93e+005

LEAN GLYCOL STREAM

Temperature: 99.00 deg. F
Flow Rate: 1.25e+001 gpm

Temperature: 70.00 deg. F
Pressure: 99.70 psia
Flow Rate: 6.71e+002 scfh

Component	Conc. (vol%)	Loading (lb/hr)
Water	4.18e-002	1.33e-002
Carbon Dioxide	5.13e-001	3.99e-001
Nitrogen	3.78e-001	1.87e-001
Methane	5.93e+001	1.68e+001
Ethane	2.55e+001	1.36e+001
Propane	8.77e+000	6.83e+000
Isobutane	9.65e-001	9.91e-001
n-Butane	2.50e+000	2.57e+000
Isopentane	4.53e-001	5.78e-001
n-Pentane	6.13e-001	7.82e-001
n-Hexane	2.96e-001	4.51e-001
Cyclohexane	4.11e-002	6.11e-002
Other Hexanes	3.44e-001	5.23e-001
Heptanes	1.73e-001	3.06e-001
Benzene	4.17e-003	5.76e-003
Toluene	5.94e-003	9.68e-003
Xylenes	7.80e-004	1.46e-003
C8+ Heavies	3.58e-002	1.08e-001
Total Components	100.00	4.42e+001

FLASH TANK GLYCOL STREAM

Temperature: 70.00 deg. F
Flow Rate: 1.32e+001 gpm

Component	Conc. (wt%)	Loading (lb/hr)
TEG	9.41e+001	6.93e+003
Water	5.02e+000	3.69e+002
Carbon Dioxide	9.46e-003	6.96e-001
Nitrogen	2.22e-004	1.63e-002
Methane	2.13e-002	1.57e+000
Ethane	7.09e-002	5.22e+000
Propane	9.36e-002	6.90e+000
Isobutane	2.34e-002	1.72e+000
n-Butane	8.52e-002	6.27e+000
Isopentane	2.43e-002	1.79e+000
n-Pentane	4.37e-002	3.22e+000
n-Hexane	5.20e-002	3.83e+000
Cyclohexane	2.81e-002	2.07e+000
Other Hexanes	4.35e-002	3.20e+000
Heptanes	8.30e-002	6.11e+000
Benzene	2.83e-002	2.08e+000
Toluene	8.69e-002	6.40e+000
Xylenes	4.30e-002	3.17e+000
C8+ Heavies	1.83e-001	1.35e+001
Total Components	100.00	7.36e+003

FLASH GAS EMISSIONS

Total Components	100.00	4.77e+000

Andrews, Edward S

From: Andrews, Edward S
Sent: Wednesday, June 24, 2015 2:33 PM
To: Jarrett, James F
Subject: FW: Sherwood deethanization

ID # 17-31
Reg R13-29 KK
Company MarkWest
Facility Sherwood Initials EK

-----Original Message-----
From: Nathan Wheldon [mailto:Nathan.Wheldon@markwest.com]
Sent: Wednesday, June 17, 2015 12:46 PM
To: Andrews, Edward S
Subject: Sherwood deethanization

Ed, as a follow up to our phone call I am providing a description of out deethanization and ethane takeaway capacity. With our Sherwood plant we will have the option to run in ethane rejection or recovery. When running in ethane rejection we will run the cryogenic plants to remove ethane from the gas stream into our y-grade liquid NGL. The y-grade then passes through the deethanizer to separate ethane as a purity product. The purity ethane is then transferred off site via a dedicated ethane pipeline.

For various reasons we may choose to run in ethane recovery, which will leave the incoming ethane entwined with the methane and discharged into the residue pipeline. This is currently how the plants operate wiithout deethanization capacity.

After the deethanization is operational if there is an instance that we cannot use the pipeline for takeaway capacity we will evaluate the following options, either in full or partial as allowed to reduce ethane to the flare. In no particular order:

- run the plant in recovery mode as long as we can meet our btu requirements in the residue line
- ask for a temporary waiver on btu requirement in the residue line
- push as much ethane as possible into our y-grade takeaway line.

Only after exhausting the limits of these three options would the ethane be routed to the flare for control. For reference we have similar systems at our Majorsville WV plant, Houston PA plant, Cadiz OH plant and we have yet to require ethane to be burned in the flare at any of these facilities.

Nathan.

Sent from my Verizon Wireless 4G LTE smartphone

Entire Document
NON-CONFIDENTIAL

Andrews, Edward S

From: Jarrett, James F
Sent: Tuesday, June 09, 2015 10:30 AM
To: Andrews, Edward S
Subject: MarkWest Sherwood

I noticed Sherwood's permit says they pay CES fees, but they have been paying CTO fees instead. Is that something you're going to change in the permit?

ID # 17-34
Reg R13-2914C
Company MarkWest
Facility Sherwood Initials SA

Entire Document
NON-CONFIDENTIAL

Andrews, Edward S

From: Andrews, Edward S
Sent: Friday, June 05, 2015 12:51 PM
To: Jarrett, James F
Subject: FW: MarkWest Sherwood Gas Plant - Dehy
Attachments: Sherwood GlyCalc Run.pdf

FYI on Sherwood Dehy and new flare.

Enjoy,
Ed

ID # 17-34
Reg R13-2548C
Company MarkWest
Facility Sherwood Initials

From: Nathan Wheldon [mailto:Nathan.Wheldon@markwest.com]
Sent: Friday, June 05, 2015 12:41 PM
To: Andrews, Edward S
Subject: RE: MarkWest Sherwood Gas Plant - Dehy

Ed, I thought I'd save you some time on this. Attached is the GRI-GlyCalc run that was initially submitted with the Sherwood Plant. The base assumptions and analysis still hold correct on the operation of the dehydration system. Earlier Dale had sent you information on the glycol pumps but only one of the three pumps can run at any given time with the other two as backup so the actual recirculation rate in this model is still correct.

I spoke with our plant engineer about the new flare. The new flare is indeed a "piggy-back" model. The piggy-back is non-assisted and it is used for low flow rates. The main stack is air-assisted. There is a meter in the line to the flare that measures volumes, the valve will be turned to the piggy-back under normal circumstances but when the volume through the line increases to a certain set level the valve will switch and the flow will be diverted to the bigger flare. By using this approach we can still meet our combustion efficiency with the low-flow streams and be smokeless and achieve our efficiency on the high flow streams.

Please let me know if you have any further questions.

Nathan.

From: Andrews, Edward S [mailto:Edward.S.Andrews@wv.gov]
Sent: Friday, May 22, 2015 7:28 AM
To: Dale Gable
Cc: Nathan Wheldon
Subject: RE: MarkWest Sherwood Gas Plant - Dehy

Dale: To ensure the unit is has a federally enforceable less than 1.0 tpy of benzene to be excluded from the HH MACT (production dehy MACT), I need to create estimate the potential HAPs from the flash gas going to the reboiler. I'll run Glycalc to predict this rate if you could send an extended wet gas analysis. Plus, I need to know the temperature and pressure that the flash tank is operating at.

Is there any stripping gas used on this unit?

Dose the reboiler have a pilot light and is it monitored?

Should you have any questions about this, please contact me.

Sincerely,

Entire Document
NON-CONFIDENTIAL

Edward S. Andrews, P.E.
Engineer
West Virginia Department of Environmental Protection
Division of Air Quality
601 57th Street, SE
Charleston, WV 25304
304.926.0499 ext. 1214

From: Dale Gable [mailto:Dale.Gable@markwest.com]
Sent: Friday, May 22, 2015 9:14 AM
To: Andrews, Edward S; Nathan Wheldon
Subject: RE: MarkWest Sherwood Gas Plant - Dehy

Andrew and Nathan,

In response to your questions:

1. Is the unit equipped with a flash tank? If so, where does the flash gas route to?
    - The unit is equipped with a flash tank
    - The flash gas goes to the Glycol Reboiler
2. What is the fuel source of the reboiler (flash gas or process gas)?
    - The plant fuel gas system – Every gas fueled device at Sherwood is fueled from the fuel gas header
3. What is the maximum glycol circulation rate for the system?
    - There are three (3) glycol pumps in the unit
    - Each pump uses one (1) quart of glycol/stroke @ 28 strokes/minute
    - Equals seven (7) gallons/minute/pump maximum
    - Total of 21 gallons/minute maximum glycol circulation

I hope that this answers your questions. If you need additional information, please contact me at your convenience.

Regards,
Dale

From: Andrews, Edward S [mailto:Edward.S.Andrews@wv.gov]
Sent: Friday, May 22, 2015 8:43 AM
To: Nathan Wheldon; Dale Gable
Subject: MarkWest Sherwood Gas Plant - Dehy

I have been trying to fix up the Sherwood Gas plant. There is not a whole lot of information on the dehy in the original file.

Questions I have are as follows:

Is the unit equipped with a flash tank? If so, where is the flash gas route to?

What is the fuel source of the reboiler (flash gas or process gas)?

What is the maximum glycol circulation rate for the system?

Should you have any questions about this e-mail, please contact me.

Sincerely,

Edward S. Andrews, P.E.
Engineer
West Virginia Department of Environmental Protection
Division of Air Quality
601 57th Street, SE
Charleston, WV 25304
304.926.0499 ext. 1214

GRI-GLYCalc VERSION 4.0 - AGGREGATE CALCULATIONS REPORT

Case Name: Sherwood
File Name: C:\Temp\From Thumb Drive\GLYcalc\Sherwood 11-23-11.ddf
Date: June 05, 2015

DESCRIPTION:

Description: One Sherwood 120 mmscf/d Dehy Unit

Annual Hours of Operation: 8760.0 hours/yr

EMISSIONS REPORTS:

CONTROLLED REGENERATOR EMISSIONS

Component	lbs/hr	lbs/day	tons/yr
Methane	1.9228	46.148	8.4221
Ethane	0.8275	19.860	3.6245
Propane	0.5091	12.217	2.2296
Isobutane	0.0938	2.252	0.4111
n-Butane	0.2760	6.624	1.2088
Isopentane	0.0801	1.924	0.3511
n-Pentane	0.1235	2.963	0.5408
n-Hexane	0.1213	2.912	0.5315
Cyclohexane	0.0448	1.075	0.1962
Other Hexanes	0.1129	2.711	0.4947
Heptanes	0.1638	3.932	0.7176
Benzene	0.0400	0.960	0.1752
Toluene	0.1189	2.853	0.5207
Xylenes	0.0555	1.331	0.2430
C8+ Heavies	0.2775	6.660	1.2155
Total Emissions	4.7676	114.423	20.8822
Total Hydrocarbon Emissions	4.7676	114.423	20.8822
Total VOC Emissions	2.0173	48.415	8.8357
Total HAP Emissions	0.3357	8.057	1.4704
Total BTEX Emissions	0.2144	5.145	0.9389

UNCONTROLLED REGENERATOR EMISSIONS

Component	lbs/hr	lbs/day	tons/yr
Methane	96.1423	2307.415	421.1032
Ethane	41.3753	993.007	181.2238
Propane	25.4525	610.860	111.4820
Isobutane	4.6924	112.617	20.5526
n-Butane	13.7992	331.181	60.4405
Isopentane	4.0075	96.180	17.5528
n-Pentane	6.1732	148.157	27.0387
n-Hexane	6.0674	145.618	26.5754
Cyclohexane	2.2396	53.750	9.8095
Other Hexanes	5.6474	135.537	24.7355
Heptanes	8.1917	196.601	35.8797
Benzene	1.9999	47.997	8.7595
Toluene	5.9443	142.663	26.0361
Xylenes	2.7736	66.565	12.1482

C8+ Heavies	13.8751	333.003	60.7731
Total Emissions	238.3814	5721.154	1044.1105
Total Hydrocarbon Emissions	238.3814	5721.154	1044.1105
Total VOC Emissions	100.8638	2420.732	441.7836
Total HAP Emissions	16.7852	402.845	73.5191
Total BTEX Emissions	10.7178	257.226	46.9438

FLASH GAS EMISSIONS

Note: Flash Gas Emissions are zero with the Recycle/recompression control option.

FLASH TANK OFF GAS

Component	lbs/hr	lbs/day	tons/yr
Methane	16.8220	403.728	73.6803
Ethane	13.5742	325.780	59.4548
Propane	6.8338	164.012	29.9322
Isobutane	0.9913	23.790	4.3417
n-Butane	2.5698	61.675	11.2557
Isopentane	0.5777	13.865	2.5303
n-Pentane	0.7819	18.765	3.4246
n-Hexane	0.4509	10.823	1.9751
Cyclohexane	0.0611	1.466	0.2676
Other Hexanes	0.5234	12.562	2.2926
Heptanes	0.3059	7.341	1.3398
Benzene	0.0058	0.138	0.0252
Toluene	0.0097	0.232	0.0424
Xylenes	0.0015	0.035	0.0064
C8+ Heavies	0.1079	2.589	0.4725
Total Emissions	43.6167	1046.802	191.0413
Total Hydrocarbon Emissions	43.6167	1046.802	191.0413
Total VOC Emissions	13.2206	317.294	57.9062
Total HAP Emissions	0.4678	11.228	2.0492
Total BTEX Emissions	0.0169	0.406	0.0740

EQUIPMENT REPORTS:

COMBUSTION DEVICE

Ambient Temperature:	70.00 deg. F
Excess Oxygen:	30.00 %
Combustion Efficiency:	98.00 %
Supplemental Fuel Requirement:	1.37e+000 MM BTU/hr

Component	Emitted	Destroyed
Methane	2.00%	98.00%
Ethane	2.00%	98.00%
Propane	2.00%	98.00%
Isobutane	2.00%	98.00%

n-Butane	2.00%	98.00%
Isopentane	2.00%	98.00%
n-Pentane	2.00%	98.00%
n-Hexane	2.00%	98.00%
Cyclohexane	2.00%	98.00%
Other Hexanes	2.00%	98.00%
Heptanes	2.00%	98.00%
Benzene	2.00%	98.00%
Toluene	2.00%	98.00%
Xylenes	2.00%	98.00%
C8+ Heavies	2.00%	98.00%

ABSORBER

NOTE: Because the Calculated Absorber Stages was below the minimum allowed, GRI-GLYCalc has set the number of Absorber Stages to 1.25 and has calculated a revised Dry Gas Dew Point.

Calculated Absorber Stages:	1.25	
Calculated Dry Gas Dew Point:	4.35	lbs. H2O/MMSCF
Temperature:	99.0	deg. F
Pressure:	1000.0	psig
Dry Gas Flow Rate:	120.0000	MMSCF/day
Glycol Losses with Dry Gas:	4.0388	lb/hr
Wet Gas Water Content:	Saturated	
Calculated Wet Gas Water Content:	57.02	lbs. H2O/MMSCF
Specified Lean Glycol Recirc. Ratio:	3.00	gal/lb H2O

Component	Remaining in Dry Gas	Absorbed in Glycol
Water	7.62%	92.38%
Carbon Dioxide	99.85%	0.15%
Nitrogen	99.99%	0.01%
Methane	99.99%	0.01%
Ethane	99.97%	0.03%
Propane	99.96%	0.04%
Isobutane	99.95%	0.05%
n-Butane	99.93%	0.07%
Isopentane	99.94%	0.06%
n-Pentane	99.92%	0.08%
n-Hexane	99.89%	0.11%
Cyclohexane	99.48%	0.52%
Other Hexanes	99.91%	0.09%
Heptanes	99.82%	0.18%
Benzene	95.19%	4.81%
Toluene	93.93%	6.07%
Xylenes	90.13%	9.87%
C8+ Heavies	99.65%	0.35%

FLASH TANK

Flash Control:	Recycle/recompression	
Flash Temperature:	70.0	deg. F
Flash Pressure:	85.0	psig

	Left in	Removed in

Component	Glycol	Flash Gas
Water	100.00%	0.00%
Carbon Dioxide	63.57%	36.43%
Nitrogen	8.02%	91.98%
Methane	8.52%	91.48%
Ethane	27.79%	72.21%
Propane	50.22%	49.78%
Isobutane	63.45%	36.55%
n-Butane	70.93%	29.07%
Isopentane	75.60%	24.40%
n-Pentane	80.45%	19.55%
n-Hexane	89.46%	10.54%
Cyclohexane	97.13%	2.87%
Other Hexanes	85.94%	14.06%
Heptanes	95.23%	4.77%
Benzene	99.72%	0.28%
Toluene	99.85%	0.15%
Xylenes	99.95%	0.05%
C8+ Heavies	99.21%	0.79%

REGENERATOR

Regenerator Stripping Gas:
Dry Product Gas
Stripping Gas Flow Rate: 50.0000 scfm

Component	Remaining in Glycol	Distilled Overhead
Water	28.59%	71.41%
Carbon Dioxide	0.00%	100.00%
Nitrogen	0.00%	100.00%
Methane	0.00%	100.00%
Ethane	0.00%	100.00%
Propane	0.00%	100.00%
Isobutane	0.00%	100.00%
n-Butane	0.00%	100.00%
Isopentane	0.66%	99.34%
n-Pentane	0.62%	99.38%
n-Hexane	0.56%	99.44%
Cyclohexane	3.29%	96.71%
Other Hexanes	1.16%	98.84%
Heptanes	0.53%	99.47%
Benzene	5.01%	94.99%
Toluene	7.92%	92.08%
Xylenes	12.96%	87.04%
C8+ Heavies	12.14%	87.86%

STREAM REPORTS:

WET GAS STREAM

Temperature: 99.00 deg. F
Pressure: 1014.70 psia

Flow Rate: 5.01e+006 scfh

Component	Conc. (vol%)	Loading (lb/hr)
Water	1.20e-001	2.85e+002
Carbon Dioxide	1.29e-001	7.48e+002
Nitrogen	3.98e-001	1.47e+003
Methane	7.45e+001	1.58e+005
Ethane	1.52e+001	6.03e+004
Propane	5.32e+000	3.09e+004
Isobutane	6.46e-001	4.96e+003
n-Butane	1.64e+000	1.26e+004
Isopentane	3.91e-001	3.72e+003
n-Pentane	5.21e-001	4.96e+003
n-Hexane	3.32e-001	3.77e+003
Cyclohexane	3.60e-002	3.99e+002
Other Hexanes	3.65e-001	4.15e+003
Heptanes	2.67e-001	3.53e+003
Benzene	4.00e-003	4.12e+001
Toluene	7.99e-003	9.72e+001
Xylenes	2.00e-003	2.80e+001
C8+ Heavies	1.52e-001	3.41e+003
Total Components	100.00	2.93e+005

DRY GAS STREAM

Temperature: 99.00 deg. F
Pressure: 1014.70 psia
Flow Rate: 5.00e+006 scfh

Component	Conc. (vol%)	Loading (lb/hr)
Water	9.17e-003	2.18e+001
Carbon Dioxide	1.29e-001	7.47e+002
Nitrogen	3.98e-001	1.47e+003
Methane	7.46e+001	1.58e+005
Ethane	1.52e+001	6.03e+004
Propane	5.32e+000	3.09e+004
Isobutane	6.47e-001	4.95e+003
n-Butane	1.64e+000	1.25e+004
Isopentane	3.91e-001	3.72e+003
n-Pentane	5.22e-001	4.96e+003
n-Hexane	3.32e-001	3.77e+003
Cyclohexane	3.58e-002	3.97e+002
Other Hexanes	3.65e-001	4.14e+003
Heptanes	2.67e-001	3.52e+003
Benzene	3.81e-003	3.92e+001
Toluene	7.52e-003	9.13e+001
Xylenes	1.80e-003	2.52e+001
C8+ Heavies	1.51e-001	3.40e+003
Total Components	100.00	2.93e+005

LEAN GLYCOL STREAM

Temperature: 99.00 deg. F
Flow Rate: 1.25e+001 gpm

Component	Conc. (wt%)	Loading (lb/hr)
TEG	9.85e+001	6.93e+003
Water	1.50e+000	1.06e+002
Carbon Dioxide	1.56e-012	1.10e-010
Nitrogen	2.90e-013	2.04e-011
Methane	8.78e-018	6.18e-016
Ethane	1.26e-007	8.87e-006
Propane	7.94e-009	5.59e-007
Isobutane	1.16e-009	8.14e-008
n-Butane	3.12e-009	2.19e-007
Isopentane	1.68e-004	1.18e-002
n-Pentane	2.84e-004	2.00e-002
n-Hexane	3.04e-004	2.14e-002
Cyclohexane	9.69e-004	6.82e-002
Other Hexanes	5.29e-004	3.72e-002
Heptanes	4.56e-004	3.21e-002
Benzene	1.48e-003	1.04e-001
Toluene	7.20e-003	5.06e-001
Xylenes	5.83e-003	4.11e-001
C8+ Heavies	2.32e-002	1.64e+000
Total Components	100.00	7.04e+003

RICH GLYCOL STREAM

Temperature: 99.00 deg. F
Pressure: 1014.70 psia
Flow Rate: 1.33e+001 gpm
NOTE: Stream has more than one phase.

Component	Conc. (wt%)	Loading (lb/hr)
TEG	9.35e+001	6.93e+003
Water	4.99e+000	3.69e+002
Carbon Dioxide	1.48e-002	1.10e+000
Nitrogen	2.75e-003	2.04e-001
Methane	2.48e-001	1.84e+001
Ethane	2.54e-001	1.88e+001
Propane	1.85e-001	1.37e+001
Isobutane	3.66e-002	2.71e+000
n-Butane	1.19e-001	8.84e+000
Isopentane	3.20e-002	2.37e+000
n-Pentane	5.40e-002	4.00e+000
n-Hexane	5.78e-002	4.28e+000
Cyclohexane	2.88e-002	2.13e+000
Other Hexanes	5.03e-002	3.72e+000
Heptanes	8.66e-002	6.42e+000
Benzene	2.82e-002	2.09e+000
Toluene	8.65e-002	6.41e+000
Xylenes	4.28e-002	3.17e+000
C8+ Heavies	1.83e-001	1.36e+001
Total Components	100.00	7.41e+003

FLASH TANK OFF GAS STREAM

Temperature: 70.00 deg. F
Pressure: 99.70 psia
Flow Rate: 6.71e+002 scfh

Component	Conc. (vol%)	Loading (lb/hr)
Water	4.18e-002	1.33e-002
Carbon Dioxide	5.13e-001	3.99e-001
Nitrogen	3.78e-001	1.87e-001
Methane	5.93e+001	1.68e+001
Ethane	2.55e+001	1.36e+001
Propane	8.77e+000	6.83e+000
Isobutane	9.65e-001	9.91e-001
n-Butane	2.50e+000	2.57e+000
Isopentane	4.53e-001	5.78e-001
n-Pentane	6.13e-001	7.82e-001
n-Hexane	2.96e-001	4.51e-001
Cyclohexane	4.11e-002	6.11e-002
Other Hexanes	3.44e-001	5.23e-001
Heptanes	1.73e-001	3.06e-001
Benzene	4.17e-003	5.76e-003
Toluene	5.94e-003	9.68e-003
Xylenes	7.80e-004	1.46e-003
C8+ Heavies	3.58e-002	1.08e-001
Total Components	100.00	4.42e+001

FLASH TANK GLYCOL STREAM

Temperature: 70.00 deg. F
Flow Rate: 1.32e+001 gpm

Component	Conc. (wt%)	Loading (lb/hr)
TEG	9.41e+001	6.93e+003
Water	5.02e+000	3.69e+002
Carbon Dioxide	9.46e-003	6.96e-001
Nitrogen	2.22e-004	1.63e-002
Methane	2.13e-002	1.57e+000
Ethane	7.09e-002	5.22e+000
Propane	9.36e-002	6.90e+000
Isobutane	2.34e-002	1.72e+000
n-Butane	8.52e-002	6.27e+000
Isopentane	2.43e-002	1.79e+000
n-Pentane	4.37e-002	3.22e+000
n-Hexane	5.20e-002	3.83e+000
Cyclohexane	2.81e-002	2.07e+000
Other Hexanes	4.35e-002	3.20e+000
Heptanes	8.30e-002	6.11e+000
Benzene	2.83e-002	2.08e+000
Toluene	8.69e-002	6.40e+000
Xylenes	4.30e-002	3.17e+000
C8+ Heavies	1.83e-001	1.35e+001
Total Components	100.00	7.36e+003

FLASH GAS EMISSIONS

Control Method: Recycle/recompression
Control Efficiency: 100.00

Note: Flash Gas Emissions are zero with the Recycle/recompression control option.

REGENERATOR OVERHEADS STREAM

Temperature: 212.00 deg. F
Pressure: 14.70 psia
Flow Rate: 8.94e+003 scfh

Component	Conc. (vol%)	Loading (lb/hr)
Water	6.22e+001	2.64e+002
Carbon Dioxide	1.10e-001	1.14e+000
Nitrogen	1.36e-001	8.98e-001
Methane	2.55e+001	9.61e+001
Ethane	5.84e+000	4.14e+001
Propane	2.45e+000	2.55e+001
Isobutane	3.43e-001	4.69e+000
n-Butane	1.01e+000	1.38e+001
Isopentane	2.36e-001	4.01e+000
n-Pentane	3.63e-001	6.17e+000
n-Hexane	2.99e-001	6.07e+000
Cyclohexane	1.13e-001	2.24e+000
Other Hexanes	2.78e-001	5.65e+000
Heptanes	3.47e-001	8.19e+000
Benzene	1.09e-001	2.00e+000
Toluene	2.74e-001	5.94e+000
Xylenes	1.11e-001	2.77e+000
C8+ Heavies	3.46e-001	1.39e+001
Total Components	100.00	5.04e+002

COMBUSTION DEVICE OFF GAS STREAM

Temperature: 1000.00 deg. F
Pressure: 14.70 psia
Flow Rate: 6.71e+001 scfh

Component	Conc. (vol%)	Loading (lb/hr)
Methane	6.77e+001	1.92e+000
Ethane	1.56e+001	8.28e-001
Propane	6.52e+000	5.09e-001
Isobutane	9.12e-001	9.38e-002
n-Butane	2.68e+000	2.76e-001
Isopentane	6.28e-001	8.01e-002
n-Pentane	9.67e-001	1.23e-001
n-Hexane	7.96e-001	1.21e-001
Cyclohexane	3.01e-001	4.48e-002
Other Hexanes	7.41e-001	1.13e-001
Heptanes	9.24e-001	1.64e-001
Benzene	2.89e-001	4.00e-002
Toluene	7.29e-001	1.19e-001
Xylenes	2.95e-001	5.55e-002
C8+ Heavies	9.21e-001	2.78e-001

Total Components	100.00	4.77e+000

Andrews, Edward S

From: Nathan Wheldon <Nathan.Wheldon@markwest.com>
Sent: Wednesday, June 03, 2015 11:54 AM
To: Andrews, Edward S
Subject: RE: Sherwood

I haven't received the affidavit yet, I will follow up with the paper today.

Nathan.

ID # 17-34
Reg R13-2946C
Company Markwest
Facility Sherwood Initials EA

From: Andrews, Edward S [mailto:Edward.S.Andrews@wv.gov]
Sent: Wednesday, June 03, 2015 6:18 AM
To: Nathan Wheldon
Subject: RE: Sherwood

Nathan: A question about the Title V Major Source status of the Mobley Gas Plan came up yesterday. I found the answers in our files and Dale had got back with me later that afternoon. If you would happen to have the affidavit of publication for the Mobley, could you forward it to me?

A call after 1:00 Eastern Time would be work best for me.

Thanks,
Ed

From: Nathan Wheldon [mailto:Nathan.Wheldon@markwest.com]
Sent: Tuesday, June 02, 2015 4:55 PM
To: Andrews, Edward S
Subject: Sherwood

Ed, I'm trying to track down my flare guy at Sherwood to give you a good answer on the piggyback question. I think I have some of the other answers for you but want to send them all at once. Hopefully I'll talk to you tomorrow.

Nathan.

Entire Document
NON-CONFIDENTIAL

Andrews, Edward S

From: Dale Gable <Dale.Gable@markwest.com>
Sent: Wednesday, June 03, 2015 10:31 AM
To: Andrews, Edward S
Subject: RE: Inlet Gas Extented Gas Analysis
Attachments: SHERWOOD INLET GAS ANALYSIS.pdf

See Attached.....

From: Andrews, Edward S [mailto:Edward.S.Andrews@wv.gov]
Sent: Tuesday, June 02, 2015 3:19 PM
To: Dale Gable
Subject: Inlet Gas Extented Gas Analysis

Dale: Could you send me a copy of Sherwood Inlet Gas Analysis that you had sent to Jamie recently?

Thanks,
Ed

ID # 17-341
Reg R13-2511C
Company MarkWest
Facility Sherwood Initials EA

Entire Document
NON-CONFIDENTIAL

Saybolt Petroleum Services
A Core Laboratories Company
201 Deerwood Glen Dr
Deer Park, TX 77536
281-478-1300

SAYBOLT LP
Tom Hogya
3915 SAW MILL RUN BLVD
PITTSBURGH, PA 15227

Report Number : 13071- 151153
Date Reported: 4/6/2015
Date Received: 4/2/2015

Analytical Report

Sample No.: 151153-001 Sample ID 2339996 (87-10524) Condensate Vapor Date Sampled 3/28/2015
Markwest-Houston, Sherwood Powell Inlet, Pressure 300, Temp 83 F

Test	Result	Units	Method	Date	Analyst
Natural Gas Analysis, Extended					
Oxygen	<0.01	Mol %	GPA 2261-95	4/6/2015	KTN
Nitrogen	0.40	Mol %			
Carbon Dioxide	0.18	Mol %			
Methane	84.18	Mol %			
Ethane	10.98	Mol %			
Propane	2.52	Mol %			
Isobutane	0.34	Mol %			
n-Butane	0.53	Mol %			
Isopentane	0.21	Mol %			
n-Pentane	0.14	Mol %			
Hexanes Plus	0.52	Mol %			
Total	100.00	Mol %			
Relative Density	0.67346		GPA 2172-96		
Compressibility Factor	0.99690				
Gross Heating Value (Dry/Real)	1185.7	BTU/CF 14.696			
Net Heating Value (Dry)	1073.6	BTU/CF (Real)			
2,2-Dimethylbutane	0.009	Mol %	GPA 2286-95		
2-Methyl Pentane	0.058	Mol %			
3-Methyl Pentane	0.035	Mol %			
n-Hexane	0.054	Mol %			
Methylcyclopentane	0.014	Mol %			
Benzene	0.003	Mol %			
Cyclohexane	0.009	Mol %			
2-Methyl Hexane	0.029	Mol %			
3-Methyl Hexane	0.022	Mol %			
Dimethylcyclopentanes	0.006	Mol %			
n-Heptane	0.026	Mol %			
Methylcyclohexane	0.023	Mol %			
Trimethylcyclopentanes	0.008	Mol %			
Toluene	0.005	Mol %			
2-Methylheptane	0.014	Mol %			
3-Methylheptane	0.009	Mol %			

The analytical results, opinions, or interpretations contained in this report are based upon information and material supplied by the client for whose exclusive and confidential use this report has been made. The analytical results, opinions, or interpretations expressed represent the best judgement of Saybolt Petroleum Services. Saybolt Petroleum Services, however, makes no warrant or representation, express or implied, of any type, and expressly disclaims same with which such report is used or relied upon for any reason whatsoever. Any person relying upon this report should be aware that issuer's activities are carried out under their general terms and conditions.

Saybolt Petroleum Services
A Core Laboratories Company
201 Deerwood Glen Dr
Deer Park, TX 77536
281-478-1300

SAYBOLT LP
Tom Hogya
3915 SAW MILL RUN BLVD
PITTSBURGH, PA 15227

Report Number : 13071- 151153
Date Reported: 4/6/2015
Date Received: 4/2/2015

Analytical Report

Sample No.: 151153-001 Sample ID 2339996 (87-10524) Condensate Vapor Date Sampled 3/28/2015
Markwest-Houston, Sherwood Powell Inlet, Pressure 300, Temp 83 F

Test	Result	Units	Method	Date	Analyst
Dimethylcyclohexanes	0.007	Mol %			
n-Octane	0.011	Mol %			
Ethyl Benzene	0.001	Mol %			
Xylenes (Total)	0.005	Mol %			
C9 Naphthenes	0.002	Mol %			
C9 Paraffins	0.007	Mol %			
n-Nonane	0.006	Mol %			
Decanes Plus	0.156	Mol %			
Hexanes Plus Mol Wt	112.3	#/#-mol			
Hexanes Plus Relative Density	0.7154	60/60			
Hexanes Plus Heating Value	6107.4	BTU/CF (Ideal)			
Hexanes Plus Vapor Equivalent	20.16	CF/gal			

The analytical results, opinions, or interpretations contained in this report are based upon information and material supplied by the client for whose exclusive and confidential use this report has been made. The analytical results, opinions, or interpretations expressed represent the best judgement of Saybolt Petroleum Services. Saybolt Petroleum Services, however, makes no warrant or representation, express or implied, of any type, and expressly disclaims same with which such report is used or relied upon for any reason whatsoever. Any person relying upon this report should be aware that issuer's activities are carried out under their general terms and conditions.

Saybolt Petroleum Services
A Core Laboratories Company
201 Deerwood Glen Dr
Deer Park, TX 77536
281-478-1300

SAYBOLT LP
Tom Hogya
3915 SAW MILL RUN BLVD
PITTSBURGH, PA 15227

Report Number : 13071- 151153
Date Reported: 4/6/2015
Date Received: 4/2/2015

Analytical Report

Sample No.: 151153-002 Sample ID 2339997 (87-10524) Condensate Vapor Date Sampled 3/28/2015
Markwest-Houston, Sherwood Inlet, Pressure 837, Temp 85 F

Test	Result	Units	Method	Date	Analyst
Natural Gas Analysis, Extended					
Oxygen	0.01	Mol %	GPA 2261-95	4/6/2015	KTN
Nitrogen	0.36	Mol %			
Carbon Dioxide	0.19	Mol %			
Methane	81.32	Mol %			
Ethane	12.99	Mol %			
Propane	3.39	Mol %			
Isobutane	0.41	Mol %			
n-Butane	0.72	Mol %			
Isopentane	0.21	Mol %			
n-Pentane	0.16	Mol %			
Hexanes Plus	0.24	Mol %			
Total	100.00	Mol %			
Relative Density	0.68560		GPA 2172-96		
Compressibility Factor	0.99681				
Gross Heating Value (Dry/Real)	1205.2	BTU/CF 14.696			
Net Heating Value (Dry)	1091.7	BTU/CF (Real)			
2,2-Dimethylbutane	0.006	Mol %	GPA 2286-95		
2-Methyl Pentane	0.043	Mol %			
3-Methyl Pentane	0.025	Mol %			
n-Hexane	0.042	Mol %			
Methylcyclopentane	0.008	Mol %			
Benzene	0.002	Mol %			
Cyclohexane	0.006	Mol %			
2-Methyl Hexane	0.015	Mol %			
3-Methyl Hexane	0.011	Mol %			
Dimethylcyclopentanes	0.003	Mol %			
n-Heptane	0.013	Mol %			
Methylcyclohexane	0.010	Mol %			
Trimethylcyclopentanes	0.003	Mol %			
Toluene	0.002	Mol %			
2-Methylheptane	0.005	Mol %			
3-Methylheptane	0.003	Mol %			

The analytical results, opinions, or interpretations contained in this report are based upon information and material supplied by the client for whose exclusive and confidential use this report has been made. The analytical results, opinions, or interpretations expressed represent the best judgement of Saybolt Petroleum Services. Saybolt Petroleum Services, however, makes no warrant or representation, express or implied, of any type, and expressly disclaims same with which such report is used or relied upon for any reason whatsoever. Any person relying upon this report should be aware that issuer's activities are carried out under their general terms and conditions.

Saybolt Petroleum Services
A Core Laboratories Company
201 Deerwood Glen Dr
Deer Park, TX 77536
281-478-1300

SAYBOLT LP
Tom Hogya
3915 SAW MILL RUN BLVD
PITTSBURGH, PA 15227

Report Number : 13071- 151153
Date Reported: 4/6/2015
Date Received: 4/2/2015

Analytical Report

Sample No.: 151153-002 Sample ID 2339997 (87-10524) Condensate Vapor Date Sampled 3/28/2015
Markwest-Houston, Sherwood Inlet, Pressure 837, Temp 85 F

Test	Result	Units	Method	Date	Analyst
Dimethylcyclohexanes	0.003	Mol %			
n-Octane	0.004	Mol %			
Ethyl Benzene	0.001	Mol %			
Xylenes (Total)	0.002	Mol %			
C9 Naphthenes	0.001	Mol %			
C9 Paraffins	0.003	Mol %			
n-Nonane	0.002	Mol %			
Decanes Plus	0.030	Mol %			
Hexanes Plus Mol Wt	100.5	#/#-mol			
Hexanes Plus Relative Density	0.7012	60/60			
Hexanes Plus Heating Value	5478.3	BTU/CF (Ideal)			
Hexanes Plus Vapor Equivalent	22.07	CF/gal			

The analytical results, opinions, or interpretations contained in this report are based upon information and material supplied by the client for whose exclusive and confidential use this report has been made. The analytical results, opinions, or interpretations expressed represent the best judgement of Saybolt Petroleum Services. Saybolt Petroleum Services, however, makes no warrant or representation, express or implied, of any type, and expressly disclaims same with which such report is used or relied upon for any reason whatsoever. Any person relying upon this report should be aware that issuer's activities are carried out under their general terms and conditions.

Saybolt Petroleum Services
A Core Laboratories Company
201 Deerwood Glen Dr
Deer Park, TX 77536
281-478-1300

SAYBOLT LP
Tom Hogya
3915 SAW MILL RUN BLVD
PITTSBURGH, PA 15227

Report Number : 13071- 151153
Date Reported: 4/6/2015
Date Received: 4/2/2015

Analytical Report

Sample No.: 151153-003 Sample ID 2339998 (87-10524) Condensate Vapor Date Sampled 3/28/2015
Markwest-Houston, Sherwood Canton Inlet, Pressure 310, Temp 85 F

Test	Result	Units	Method	Date	Analyst
Natural Gas Analysis, Extended					
Oxygen	0.02	Mol %	GPA 2261-95	4/6/2015	KTN
Nitrogen	0.36	Mol %			
Carbon Dioxide	0.16	Mol %			
Methane	81.85	Mol %			
Ethane	12.67	Mol %			
Propane	3.18	Mol %			
Isobutane	0.39	Mol %			
n-Butane	0.71	Mol %			
Isopentane	0.22	Mol %			
n-Pentane	0.21	Mol %			
Hexanes Plus	0.23	Mol %			
Total	100.00	Mol %			
Relative Density	0.68185		GPA 2172-96		
Compressibility Factor	0.99685				
Gross Heating Value (Dry/Real)	1199.9	BTU/CF 14.696			
Net Heating Value (Dry)	1086.7	BTU/CF (Real)			
2,2-Dimethylbutane	0.007	Mol %	GPA 2286-95		
2-Methyl Pentane	0.046	Mol %			
3-Methyl Pentane	0.027	Mol %			
n-Hexane	0.041	Mol %			
Methylcyclopentane	0.008	Mol %			
Benzene	0.001	Mol %			
Cyclohexane	0.005	Mol %			
2-Methyl Hexane	0.015	Mol %			
3-Methyl Hexane	0.011	Mol %			
Dimethylcyclopentanes	0.003	Mol %			
n-Heptane	0.012	Mol %			
Methylcyclohexane	0.009	Mol %			
Trimethylcyclopentanes	0.003	Mol %			
Toluene	0.002	Mol %			
2-Methylheptane	0.005	Mol %			
3-Methylheptane	0.003	Mol %			

The analytical results, opinions, or interpretations contained in this report are based upon information and material supplied by the client for whose exclusive and confidential use this report has been made. The analytical results, opinions, or interpretations expressed represent the best judgement of Saybolt Petroleum Services. Saybolt Petroleum Services, however, makes no warrant or representation, express or implied, of any type, and expressly disclaims same with which such report is used or relied upon for any reason whatsoever. Any person relying upon this report should be aware that issuer's activities are carried out under their general terms and conditions.

Saybolt Petroleum Services
A Core Laboratories Company
201 Deerwood Glen Dr
Deer Park, TX 77536
281-478-1300

SAYBOLT LP
Tom Hogya
3915 SAW MILL RUN BLVD
PITTSBURGH, PA 15227

Report Number : 13071- 151153
Date Reported: 4/6/2015
Date Received: 4/2/2015

Analytical Report

Sample No.: 151153-003 Sample ID 2339998 (87-10524) Condensate Vapor Date Sampled 3/28/2015
Markwest-Houston, Sherwood Canton Inlet, Pressure 310, Temp 85 F

Test	Result	Units	Method	Date	Analyst
Dimethylcyclohexanes	0.003	Mol %			
n-Octane	0.004	Mol %			
Ethyl Benzene	0.001	Mol %			
Xylenes (Total)	0.002	Mol %			
C9 Naphthenes	0.002	Mol %			
C9 Paraffins	0.003	Mol %			
n-Nonane	0.001	Mol %			
Decanes Plus	0.012	Mol %			
Hexanes Plus Mol Wt	96.4	#/#-mol			
Hexanes Plus Relative Density	0.6950	60/60			
Hexanes Plus Heating Value	5258.9	BTU/CF (Ideal)			
Hexanes Plus Vapor Equivalent	22.81	CF/gal			

Approved By: _____

M. Jean Waits
Supervising Chemist

The analytical results, opinions, or interpretations contained in this report are based upon information and material supplied by the client for whose exclusive and confidential use this report has been made. The analytical results, opinions, or interpretations expressed represent the best judgement of Saybolt Petroleum Services. Saybolt Petroleum Services, however, makes no warrant or representation, express or implied, of any type, and expressly disclaims same with which such report is used or relied upon for any reason whatsoever. Any person relying upon this report should be aware that issuer's activities are carried out under their general terms and conditions.

Andrews, Edward S

From: Andrews, Edward S
Sent: Wednesday, June 03, 2015 8:18 AM
To: 'Nathan Wheldon'
Subject: RE: Sherwood

Nathan: A question about the Title V Major Source status of the Mobley Gas Plan came up yesterday. I found the answers in our files and Dale had got back with me later that afternoon. If you would happen to have the affidavit of publication for the Mobley, could you forward it to me?

A call after 1:00 Eastern Time would be work best for me.

Thanks,
Ed

From: Nathan Wheldon [mailto:Nathan.Wheldon@markwest.com]
Sent: Tuesday, June 02, 2015 4:55 PM
To: Andrews, Edward S
Subject: Sherwood

Ed, I'm trying to track down my flare guy at Sherwood to give you a good answer on the piggyback question. I think I have some of the other answers for you but want to send them all at once. Hopefully I'll talk to you tomorrow.

Nathan.

ID # 17-34
Reg R13-25 AC
Company Markwest
Facility Sherwood Initials EDW

Entire Document
NON-CONFIDENTIAL

Andrews, Edward S

From: Nathan Wheldon <Nathan.Wheldon@markwest.com>
Sent: Tuesday, June 02, 2015 4:55 PM
To: Andrews, Edward S
Subject: Sherwood

Ed, I'm trying to track down my flare guy at Sherwood to give you a good answer on the piggyback question. I think I have some of the other answers for you but want to send them all at once. Hopefully I'll talk to you tomorrow.

Nathan.

ID # 17-34
Reg R13-2914K
Company MarkWest
Facility Sherwood Initials SK

Entire Document
NON-CONFIDENTIAL

Andrews, Edward S

From: Andrews, Edward S
Sent: Friday, May 22, 2015 11:58 AM
To: Nathan Wheldon; dale.gable@markwest.com
Cc: Jarrett, James F
Subject: Questions on the new flare design

Hey: I was reviewing the proposed new flare and notice that it has a piggy-back flare.

My observation of the piggy-back flare is that it is a non-assisted flare. Please let me know if that is correct or not.

When would this flare be used & what waste gas would be sent to it?

I am looking for the actual tip diameter for both flares. Could you help me out on this?

Thanks,
Ed

Sincerely,

Edward S. Andrews, P.E.
Engineer
West Virginia Department of Environmental Protection
Division of Air Quality
601 57th Street, SE
Charleston, WV 25304
304.926.0499 ext. 1214

ID # 17-341
Reg R13-2914L
Company MarkWest
Facility Sherwood Initials E.W.

Entire Document
NON-CONFIDENTIAL

Andrews, Edward S

From: Andrews, Edward S
Sent: Friday, May 22, 2015 9:28 AM
To: 'Dale Gable'
Cc: Nathan Wheldon
Subject: RE: MarkWest Sherwood Gas Plant - Dehy

Dale: To ensure the unit is has a federally enforceable less than 1.0 tpy of benzene to be excluded from the HH MACT (production dehy MACT), I need to create estimate the potential HAPs from the flash gas going to the reboiler. I'll run Glycalc to predict this rate if you could send an extended wet gas analysis. Plus, I need to know the temperature and pressure that the flash tank is operating at.

Is there any stripping gas used on this unit?

Dose the reboiler have a pilot light and is it monitored?

Should you have any questions about this, please contact me.

Sincerely,

ID # 17-311
Reg R13-2546K
Company MarkWest
Facility Sherwood Initials EAA

Edward S. Andrews, P.E.
Engineer
West Virginia Department of Environmental Protection
Division of Air Quality
601 57th Street, SE
Charleston, WV 25304
304.926.0499 ext. 1214

From: Dale Gable [mailto:Dale.Gable@markwest.com]
Sent: Friday, May 22, 2015 9:14 AM
To: Andrews, Edward S; Nathan Wheldon
Subject: RE: MarkWest Sherwood Gas Plant - Dehy

Entire Document
NON-CONFIDENTIAL

Andrew and Nathan,

In response to your questions:

1. Is the unit equipped with a flash tank? If so, where does the flash gas route to?
   - The unit is equipped with a flash tank
   - The flash gas goes to the Glycol Reboiler
2. What is the fuel source of the reboiler (flash gas or process gas)?
   - The plant fuel gas system – Every gas fueled device at Sherwood is fueled from the fuel gas header

3. What is the maximum glycol circulation rate for the system?
    - There are three (3) glycol pumps in the unit
    - Each pump uses one (1) quart of glycol/stroke @ 28 strokes/minute
    - Equals seven (7) gallons/minute/pump maximum
    - Total of 21 gallons/minute maximum glycol circulation

I hope that this answers your questions. If you need additional information, please contact me at your convenience.

Regards,
Dale

From: Andrews, Edward S [mailto:Edward.S.Andrews@wv.gov]
Sent: Friday, May 22, 2015 8:43 AM
To: Nathan Wheldon; Dale Gable
Subject: MarkWest Sherwood Gas Plant - Dehy

I have been trying to fix up the Sherwood Gas plant. There is not a whole lot of information on the dehy in the original file.

Questions I have are as follows:

Is the unit equipped with a flash tank? If so, where is the flash gas route to?

What is the fuel source of the reboiler (flash gas or process gas)?

What is the maximum glycol circulation rate for the system?

Should you have any questions about this e-mail, please contact me.

Sincerely,

Edward S. Andrews, P.E.
Engineer
West Virginia Department of Environmental Protection
Division of Air Quality
601 57th Street, SE
Charleston, WV 25304
304.926.0499 ext. 1214

Andrews, Edward S

From: Dale Gable <Dale.Gable@markwest.com>
Sent: Tuesday, May 12, 2015 11:11 AM
To: Nathan Wheldon; Andrews, Edward S
Cc: Jarrett, James F
Subject: RE: MarkWest Sherwood Gas Plant

Nathan,

I submitted the Variance request, but haven't received permission, as yet. I had to resubmit last week, due to a change in the outage date to July 7, 2015.

Regards,
Dale

ID # 17-24
Reg R13-2EKC
Company MarkWest
Facility Sherwood Initials EA

From: Nathan Wheldon
Sent: Tuesday, May 12, 2015 11:04 AM
To: Andrews, Edward S
Cc: Dale Gable; Jarrett, James F
Subject: RE: MarkWest Sherwood Gas Plant

Ed, my understanding is that Dale has already submitted and received permission to use the temporary flare for the time needed.

Nathan.

From: Andrews, Edward S [mailto:Edward.S.Andrews@wv.gov]
Sent: Tuesday, May 12, 2015 6:20 AM
To: Nathan Wheldon
Cc: Dale Gable; Jarrett, James F
Subject: RE: MarkWest Sherwood Gas Plant

Nathan: Thanks for these answers. On the GPA Method, I will have do some research to see if EPA has approved it is as an acceptable method to determine the VOC content of process steam. I know this method accepted for other regulatory purposes.

For the temporary flare, I can allow it to be in service while the new is being installed and commissioned for up to 180 days with very little justification. Do you think 180 days would be sufficient amount of time for the installation of the new flare?

Should you have any questions, please contact me.

Sincerely,

Edward S. Andrews, P.E.
Engineer

Entire Document
NON-CONFIDENTIAL

West Virginia Department of Environmental Protection
Division of Air Quality
601 57th Street, SE
Charleston, WV 25304
304.926.0499 ext. 1214

From: Nathan Wheldon [mailto:Nathan.Wheldon@markwest.com]
Sent: Monday, May 11, 2015 7:19 PM
To: Andrews, Edward S
Subject: RE: MarkWest Sherwood Gas Plant

Ed, I have answers to the questions that we discussed last week on the phone.

1) As for the pressure relief devices, everything that is in VOC service is vented to the flare. Those that are not in VOC service are vented to atmosphere. Dale has the P&IDs that show this if you need to check
2) I have attached the gas analysis method that is used by our measurement team for the gas chromatography at all MarkWest facilities. It is a GPA method.
3) For the flare, on July 7, 2015 a temporary flare will be installed and a connecting line will be installed that will have the ability to route gas to the existing flare or to the new flare. The new flare will be constructed and when we have the air permit and the flare is ready the alignment will be such that gas will cease flowing to the existing flare and will flow to the new flare. No gas will flow to the existing flare from that point. I do not yet know if they will deconstruct the existing flare or if they will leave it on site to be used as an emergency backup to the new flare. If we are required to remove the flare I will instruct my personnel on what to do.

Please let me know if you have any further questions. I look forward to seeing a draft of this permit next week,

Nathan.

From: Andrews, Edward S [mailto:Edward.S.Andrews@wv.gov]
Sent: Tuesday, April 07, 2015 11:33 AM
To: Nathan Wheldon
Cc: Dale Gable; Jarrett, James F
Subject: RE: MarkWest Sherwood Gas Plant

Nathan: After visiting the plant last week, I notice several areas that I would like to address in the permit to improve the flow and understanding what is affected and what is not affect to a particular condition(s). During Mr. Jarrett's inspection, we found ourselves questioning whether a components was in VOC service per Subpart OOOO or not (i.e. Residue gas compressors). I would like to note the ones on the actual equipment in the plant in the Emission Unit Description column of Table 1.0 of the permit. For the LDAR requirements, I would to be a like more specific it either what is affected component(s) or equipment(s) under the LDAR requirement.

If I can get free up, I would like to make announce visit to the plant in the near future and go over the existing conditions and how or what the facility is doing to comply with them.

One issue that I need some input on is the transition from the existing flare to the new flare. What I really need to know is how the transition is going to happen? Basically, I will craft the permit as it is planned. Plus, if MARKWEST wants/or needs to keep the existing flare as a backup, let me know. I will see what I can do about it.

Thank,

Ed

Sincerely,

Edward S. Andrews, P.E.
Engineer
West Virginia Department of Environmental Protection
Division of Air Quality
601 57th Street, SE
Charleston, WV 25304
304.926.0499 ext. 1214

From: Nathan Wheldon [mailto:Nathan.Wheldon@markwest.com]
Sent: Tuesday, April 07, 2015 9:40 AM
To: Andrews, Edward S
Subject: RE: MarkWest Sherwood Gas Plant

Thanks Ed. This approach sounds great. I look forward to your questions and first draft of the permit.

From: Andrews, Edward S [mailto:Edward.S.Andrews@wv.gov]
Sent: Friday, March 27, 2015 11:10 AM
To: Nathan Wheldon
Subject: RE: MarkWest Sherwood Gas Plant

Nathan: Thank-you for the quick turn around on to my request for additional information. I will try to put together my understanding of your deehanizer process with regards to the process heater exclusion under Subpart Db and forward it back to you to review. Once the Subpart Db exclusion is justified, the rest of my review should be straight forward.

Over the next couple of weeks, I will give you a list of items that I with need your input on in developing an understandable permit. The approach that kind of works best for me is that I will develop a pre-draft permit (working document) for MarkWest to review and make suggestions. I will put my style of permit writing on this pre-draft. Existing conditions that are one time requirements (i.e. initial notifications) or conditions that are not or no longer applicable, I will be omitting, which means I need I might be asking a lot questions that are not relative to this actual project. I like to see clean and straightforward permit leave my desk at the end of day.

Should you have any questions, please contact me.

Sincerely,

Edward S. Andrews, P.E.
Engineer
West Virginia Department of Environmental Protection
Division of Air Quality
601 57th Street, SE
Charleston, WV 25304
304.926.0499 ext. 1214

From: Nathan Wheldon [mailto:Nathan.Wheldon@markwest.com]
Sent: Friday, March 27, 2015 11:03 AM
To: Andrews, Edward S
Cc: Dale Gable; Jarrett, James F
Subject: RE: MarkWest Sherwood Gas Plant

Ed, please see below and attached answers to your questions.

From: Andrews, Edward S [mailto:Edward.S.Andrews@wv.gov]
Sent: Thursday, March 26, 2015 9:32 AM
To: Nathan Wheldon
Cc: Dale Gable; Jarrett, James F
Subject: MarkWest Sherwood Gas Plant

Nathan: I was seeing if you have seen the affidavit of publication. Last I spoke with it should have been published and forwarded to me. I am still waiting on it. If it has been sent in, could you e-mail me a scanned in copy. Please see attached for the signed affidavit of publication.

The application did not include a process flow diagram. I would like to have a P&I diagram of the deethanization unit, stabilizers, and of the cryogenic units. See attached for the PFDs of the process.

For Subpart OOOO LDAR compliance, are there any existing components being vented to the existing flare? If so, please identify the affected component. For the proposed new processing units, are any components being vented to the new flare as part of meeting the LDAR requirements of Subpart OOOO? If so, please identify them on the P&I diagrams. Components are not vented to the flare as part of LDAR. This includes both the existing and proposed facilities.

Please identify the source of the fuel for the heaters (preprocessed pipeline gas, after extraction, process gas)? I need the total sulfur and H2S loading of the supply stream. The source of fuel will be residue gas from the outlet of the plant. I have attached a fuel gas analysis for your perusal. In this area of the Marcellus there are not identifiable amounts of sulfur compounds in the fuel.

In the application for the flare, there are several cases listed in the September 25, 2014 proposal. Could you provide estimate of duration for these cases? Would there be a continuous purge vent or other waste stream going to the flare? I need the H2S loading of any waste stream being vent to the flare. The flare emission needs to include the emissions generated from combusting the waste gases vented to the flare. Speaking with my engineers the longest possible case would be 30 minutes, most cases would be much shorter than that. It is all dependent upon the problem that is causing the relief to begin with. There is a continuous purge on the flare and that is identified and calculated in the emissions from the flare, if you look at table N on the flare sheet you will see that there is gas usage for the pilot light and a separate line for the purge gas and both are included in the emission estimate for the flare. Other than those there is nothing calculated for the flare emissions as there are no regular ventings to the flare there is only emergency releases during a period of malfunction or shut down. We cannot predict when emergencies will happen and what the gas flow will be to the flare in any given emergency so those are not required to be submitted in the application. As with the fuel gas there are not measurable amounts of sulfur in any gas stream at the Sherwood Plant.

Should you have any questions, please contact me.

Sincerely,

Edward S. Andrews, P.E.
Engineer
West Virginia Department of Environmental Protection
Division of Air Quality
601 57th Street, SE
Charleston, WV 25304
304.926.0499 ext. 1214

Andrews, Edward S

From: Nathan Wheldon <Nathan.Wheldon@markwest.com>
Sent: Monday, May 11, 2015 7:19 PM
To: Andrews, Edward S
Subject: RE: MarkWest Sherwood Gas Plant
Attachments: GPA_2261-13 - Gas Analysis Methods.pdf

Ed, I have answers to the questions that we discussed last week on the phone.

1) As for the pressure relief devices, everything that is in VOC service is vented to the flare. Those that are not in VOC service are vented to atmosphere. Dale has the P&IDs that show this if you need to check
2) I have attached the gas analysis method that is used by our measurement team for the gas chromatography at all MarkWest facilities. It is a GPA method.
3) For the flare, on July 7, 2015 a temporary flare will be installed and a connecting line will be installed that will have the ability to route gas to the existing flare or to the new flare. The new flare will be constructed and when we have the air permit and the flare is ready the alignment will be such that gas will cease flowing to the existing flare and will flow to the new flare. No gas will flow to the existing flare from that point. I do not yet know if they will deconstruct the existing flare or if they will leave it on site to be used as an emergency backup to the new flare. If we are required to remove the flare I will instruct my personnel on what to do.

Please let me know if you have any further questions. I look forward to seeing a draft of this permit next week,

Nathan.

ID # 17-3V
Reg R13-2814C
Company MarkWest
Facility Sherwood Initials EA

From: Andrews, Edward S [mailto:Edward.S.Andrews@wv.gov]
Sent: Tuesday, April 07, 2015 11:33 AM
To: Nathan Wheldon
Cc: Dale Gable; Jarrett, James F
Subject: RE: MarkWest Sherwood Gas Plant

Nathan: After visiting the plant last week, I notice several areas that I would like to address in the permit to improve the flow and understanding what is affected and what is not affect to a particular condition(s). During Mr. Jarrett's inspection, we found ourselves questioning whether a components was in VOC service per Subpart OOOO or not (i.e. Residue gas compressors). I would like to note the ones on the actual equipment in the plant in the Emission Unit Description column of Table 1.0 of the permit. For the LDAR requirements, I would to be a like more specific it either what is affected component(s) or equipment(s) under the LDAR requirement.

If I can get free up, I would like to make announce visit to the plant in the near future and go over the existing conditions and how or what the facility is doing to comply with them.

One issue that I need some input on is the transition from the existing flare to the new flare. What I really need to know is how the transition is going to happen? Basically, I will craft the permit as it is planned. Plus, if MARKWEST wants/or needs to keep the existing flare as a backup, let me know. I will see what I can do about it.

Thank,
Ed

Sincerely,

Entire Document
NON-CONFIDENTIAL

Edward S. Andrews, P.E.
Engineer
West Virginia Department of Environmental Protection
Division of Air Quality
601 57th Street, SE
Charleston, WV 25304
304.926.0499 ext. 1214

From: Nathan Wheldon [mailto:Nathan.Wheldon@markwest.com]
Sent: Tuesday, April 07, 2015 9:40 AM
To: Andrews, Edward S
Subject: RE: MarkWest Sherwood Gas Plant

Thanks Ed. This approach sounds great. I look forward to your questions and first draft of the permit.

From: Andrews, Edward S [mailto:Edward.S.Andrews@wv.gov]
Sent: Friday, March 27, 2015 11:10 AM
To: Nathan Wheldon
Subject: RE: MarkWest Sherwood Gas Plant

Nathan: Thank-you for the quick turn around on to my request for additional information. I will try to put together my understanding of your deehanizer process with regards to the process heater exclusion under Subpart Db and forward it back to you to review. Once the Subpart Db exclusion is justified, the rest of my review should be straight forward.

Over the next couple of weeks, I will give you a list of items that I with need your input on in developing an understandable permit. The approach that kind of works best for me is that I will develop a pre-draft permit (working document) for MarkWest to review and make suggestions. I will put my style of permit writing on this pre-draft. Existing conditions that are one time requirements (i.e. initial notifications) or conditions that are not or no longer applicable, I will be omitting, which means I need I might be asking a lot questions that are not relative to this actual project. I like to see clean and straightforward permit leave my desk at the end of day.

Should you have any questions, please contact me.

Sincerely,

Edward S. Andrews, P.E.
Engineer
West Virginia Department of Environmental Protection
Division of Air Quality
601 57th Street, SE
Charleston, WV 25304
304.926.0499 ext. 1214

From: Nathan Wheldon [mailto:Nathan.Wheldon@markwest.com]
Sent: Friday, March 27, 2015 11:03 AM
To: Andrews, Edward S
Cc: Dale Gable; Jarrett, James F
Subject: RE: MarkWest Sherwood Gas Plant

Ed, please see below and attached answers to your questions.

From: Andrews, Edward S [mailto:Edward.S.Andrews@wv.gov]
Sent: Thursday, March 26, 2015 9:32 AM
To: Nathan Wheldon
Cc: Dale Gable; Jarrett, James F
Subject: MarkWest Sherwood Gas Plant

Nathan: I was seeing if you have seen the affidavit of publication. Last I spoke with it should have been published and forwarded to me. I am still waiting on it. If it has been sent in, could you e-mail me a scanned in copy. Please see attached for the signed affidavit of publication.

The application did not include a process flow diagram. I would like to have a P&I diagram of the deethanization unit, stabilizers, and of the cryogenic units. See attached for the PFDs of the process.

For Subpart OOOO LDAR compliance, are there any existing components being vented to the existing flare? If so, please identify the affected component. For the proposed new processing units, are any components being vented to the new flare as part of meeting the LDAR requirements of Subpart OOOO? If so, please identify them on the P&I diagrams. Components are not vented to the flare as part of LDAR. This includes both the existing and proposed facilities.

Please identify the source of the fuel for the heaters (preprocessed pipeline gas, after extraction, process gas)? I need the total sulfur and H2S loading of the supply stream. The source of fuel will be residue gas from the outlet of the plant. I have attached a fuel gas analysis for your perusal. In this area of the Marcellus there are not identifiable amounts of sulfur compounds in the fuel.

In the application for the flare, there are several cases listed in the September 25, 2014 proposal. Could you provide estimate of duration for these cases? Would there be a continuous purge vent or other waste stream going to the flare? I need the H2S loading of any waste stream being vent to the flare. The flare emission needs to include the emissions generated from combusting the waste gases vented to the flare. Speaking with my engineers the longest possible case would be 30 minutes, most cases would be much shorter than that. It is all dependent upon the problem that is causing the relief to begin with. There is a continuous purge on the flare and that is identified and calculated in the emissions from the flare, if you look at table N on the flare sheet you will see that there is gas usage for the pilot light and a separate line for the purge gas and both are included in the emission estimate for the flare. Other than those there is nothing calculated for the flare emissions as there are no regular ventings to the flare there is only emergency releases during a period of malfunction or shut down. We cannot predict when emergencies will happen and what the gas flow will be to the flare in any given emergency so those are not required to be submitted in the application. As with the fuel gas there are not measurable amounts of sulfur in any gas stream at the Sherwood Plant.

Should you have any questions, please contact me.

Sincerely,

Edward S. Andrews, P.E.
Engineer
West Virginia Department of Environmental Protection

Division of Air Quality
601 57th Street, SE
Charleston, WV 25304
304.926.0499 ext. 1214

Andrews, Edward S

From: Nathan Wheldon <Nathan.Wheldon@markwest.com>
Sent: Tuesday, April 07, 2015 4:41 PM
To: Andrews, Edward S
Cc: Dale Gable; Jarrett, James F
Subject: RE: MarkWest Sherwood Gas Plant

Ed, I should be able to answer all your questions without a visit to the plant, but if you feel a visit is required I can work to meet with you and Dale at the plant. I know for the LDAR monitoring company we were previously using was overzealous in tagging and monitoring equipment that did not require LDAR including the residue compressors, which are not required because it is less than 10% VOC service. We now have a new LDAR monitoring company (Targa) who is going through the facility and making determinations and removing tags on equipment that is not required to be in the LDAR program, from other facilities that they have done this at we are finding they are removing 10-20% of the tags that were previously on. I think it is safe to say that because of that conservancy we have made sure that everything that is required.

From: Andrews, Edward S [mailto:Edward.S.Andrews@wv.gov]
Sent: Tuesday, April 07, 2015 11:33 AM
To: Nathan Wheldon
Cc: Dale Gable; Jarrett, James F
Subject: RE: MarkWest Sherwood Gas Plant

ID # 17-31
Reg R13-2914C
Company MarkWest
Facility Sherwood L Initials EK

Nathan: After visiting the plant last week, I notice several areas that I would like to address in the permit to improve the flow and understanding what is affected and what is not affect to a particular condition(s). During Mr. Jarrett's inspection, we found ourselves questioning whether a components was in VOC service per Subpart OOOO or not (i.e. Residue gas compressors). I would like to note the ones on the actual equipment in the plant in the Emission Unit Description column of Table 1.0 of the permit. For the LDAR requirements, I would to be a like more specific it either what is affected component(s) or equipment(s) under the LDAR requirement.

If I can get free up, I would like to make announce visit to the plant in the near future and go over the existing conditions and how or what the facility is doing to comply with them.

One issue that I need some input on is the transition from the existing flare to the new flare. What I really need to know is how the transition is going to happen? Basically, I will craft the permit as it is planned. Plus, if MARKWEST wants/or needs to keep the existing flare as a backup, let me know. I will see what I can do about it.

Thank,
Ed

Sincerely,

Edward S. Andrews, P.E.
Engineer
West Virginia Department of Environmental Protection
Division of Air Quality
601 57th Street, SE
Charleston, WV 25304
304.926.0499 ext. 1214

Entire Document
NON-CONFIDENTIAL

From: Nathan Wheldon [mailto:Nathan.Wheldon@markwest.com]
Sent: Tuesday, April 07, 2015 9:40 AM
To: Andrews, Edward S
Subject: RE: MarkWest Sherwood Gas Plant

Thanks Ed. This approach sounds great. I look forward to your questions and first draft of the permit.

From: Andrews, Edward S [mailto:Edward.S.Andrews@wv.gov]
Sent: Friday, March 27, 2015 11:10 AM
To: Nathan Wheldon
Subject: RE: MarkWest Sherwood Gas Plant

Nathan: Thank-you for the quick turn around on to my request for additional information. I will try to put together my understanding of your deehanizer process with regards to the process heater exclusion under Subpart Db and forward it back to you to review. Once the Subpart Db exclusion is justified, the rest of my review should be straight forward.

Over the next couple of weeks, I will give you a list of items that I with need your input on in developing an understandable permit. The approach that kind of works best for me is that I will develop a pre-draft permit (working document) for MarkWest to review and make suggestions. I will put my style of permit writing on this pre-draft. Existing conditions that are one time requirements (i.e. initial notifications) or conditions that are not or no longer applicable, I will be omitting, which means I need I might be asking a lot questions that are not relative to this actual project. I like to see clean and straightforward permit leave my desk at the end of day.

Should you have any questions, please contact me.

Sincerely,

Edward S. Andrews, P.E.
Engineer
West Virginia Department of Environmental Protection
Division of Air Quality
601 57th Street, SE
Charleston, WV 25304
304.926.0499 ext. 1214

From: Nathan Wheldon [mailto:Nathan.Wheldon@markwest.com]
Sent: Friday, March 27, 2015 11:03 AM
To: Andrews, Edward S
Cc: Dale Gable; Jarrett, James F
Subject: RE: MarkWest Sherwood Gas Plant

Ed, please see below and attached answers to your questions.

From: Andrews, Edward S [mailto:Edward.S.Andrews@wv.gov]
Sent: Thursday, March 26, 2015 9:32 AM
To: Nathan Wheldon

Cc: Dale Gable; Jarrett, James F
Subject: MarkWest Sherwood Gas Plant

Nathan: I was seeing if you have seen the affidavit of publication. Last I spoke with it should have been published and forwarded to me. I am still waiting on it. If it has been sent in, could you e-mail me a scanned in copy. Please see attached for the signed affidavit of publication.

The application did not include a process flow diagram. I would like to have a P&I diagram of the deethanization unit, stabilizers, and of the cryogenic units. See attached for the PFDs of the process.

For Subpart OOOO LDAR compliance, are there any existing components being vented to the existing flare? If so, please identify the affected component. For the proposed new processing units, are any components being vented to the new flare as part of meeting the LDAR requirements of Subpart OOOO? If so, please identify them on the P&I diagrams. Components are not vented to the flare as part of LDAR. This includes both the existing and proposed facilities.

Please identify the source of the fuel for the heaters (preprocessed pipeline gas, after extraction, process gas)? I need the total sulfur and H2S loading of the supply stream. The source of fuel will be residue gas from the outlet of the plant. I have attached a fuel gas analysis for your perusal. In this area of the Marcellus there are not identifiable amounts of sulfur compounds in the fuel.

In the application for the flare, there are several cases listed in the September 25, 2014 proposal. Could you provide estimate of duration for these cases? Would there be a continuous purge vent or other waste stream going to the flare? I need the H2S loading of any waste stream being vent to the flare. The flare emission needs to include the emissions generated from combusting the waste gases vented to the flare. Speaking with my engineers the longest possible case would be 30 minutes, most cases would be much shorter than that. It is all dependent upon the problem that is causing the relief to begin with. There is a continuous purge on the flare and that is identified and calculated in the emissions from the flare, if you look at table N on the flare sheet you will see that there is gas usage for the pilot light and a separate line for the purge gas and both are included in the emission estimate for the flare. Other than those there is nothing calculated for the flare emissions as there are no regular ventings to the flare there is only emergency releases during a period of malfunction or shut down. We cannot predict when emergencies will happen and what the gas flow will be to the flare in any given emergency so those are not required to be submitted in the application. As with the fuel gas there are not measurable amounts of sulfur in any gas stream at the Sherwood Plant.

Should you have any questions, please contact me.

Sincerely,

Edward S. Andrews, P.E.
Engineer
West Virginia Department of Environmental Protection
Division of Air Quality
601 57th Street, SE
Charleston, WV 25304
304.926.0499 ext. 1214

Andrews, Edward S

From: Andrews, Edward S
Sent: Tuesday, April 07, 2015 1:33 PM
To: 'Nathan Wheldon'
Cc: dale.gable@markwest.com; Jarrett, James F
Subject: RE: MarkWest Sherwood Gas Plant

Nathan: After visiting the plant last week, I notice several areas that I would like to address in the permit to improve the flow and understanding what is affected and what is not affect to a particular condition(s). During Mr. Jarrett's inspection, we found ourselves questioning whether a components was in VOC service per Subpart OOOO or not (i.e. Residue gas compressors). I would like to note the ones on the actual equipment in the plant in the Emission Unit Description column of Table 1.0 of the permit. For the LDAR requirements, I would to be a like more specific it either what is affected component(s) or equipment(s) under the LDAR requirement.

If I can get free up, I would like to make announce visit to the plant in the near future and go over the existing conditions and how or what the facility is doing to comply with them.

One issue that I need some input on is the transition from the existing flare to the new flare. What I really need to know is how the transition is going to happen? Basically, I will craft the permit as it is planned. Plus, if MARKWEST wants/or needs to keep the existing flare as a backup, let me know. I will see what I can do about it.

Thank,
Ed

Sincerely,

Edward S. Andrews, P.E.
Engineer
West Virginia Department of Environmental Protection
Division of Air Quality
601 57th Street, SE
Charleston, WV 25304
304.926.0499 ext. 1214

From: Nathan Wheldon [mailto:Nathan.Wheldon@markwest.com]
Sent: Tuesday, April 07, 2015 9:40 AM
To: Andrews, Edward S
Subject: RE: MarkWest Sherwood Gas Plant

Thanks Ed. This approach sounds great. I look forward to your questions and first draft of the permit.

From: Andrews, Edward S [mailto:Edward.S.Andrews@wv.gov]
Sent: Friday, March 27, 2015 11:10 AM
To: Nathan Wheldon
Subject: RE: MarkWest Sherwood Gas Plant

Nathan: Thank-you for the quick turn around on to my request for additional information. I will try to put together my understanding of your deehanizer process with regards to the process heater exclusion under Subpart Db and forward it back to you to review. Once the Subpart Db exclusion is justified, the rest of my review should be straight forward.

Over the next couple of weeks, I will give you a list of items that I with need your input on in developing an understandable permit. The approach that kind of works best for me is that I will develop a pre-draft permit (working document) for MarkWest to review and make suggestions. I will put my style of permit writing on this pre-draft. Existing conditions that are one time requirements (i.e. initial notifications) or conditions that are not or no longer applicable, I will be omitting, which means I need I might be asking a lot questions that are not relative to this actual project. I like to see clean and straightforward permit leave my desk at the end of day.

Should you have any questions, please contact me.

Sincerely,

Edward S. Andrews, P.E.
Engineer
West Virginia Department of Environmental Protection
Division of Air Quality
601 57th Street, SE
Charleston, WV 25304
304.926.0499 ext. 1214

From: Nathan Wheldon [mailto:Nathan.Wheldon@markwest.com]
Sent: Friday, March 27, 2015 11:03 AM
To: Andrews, Edward S
Cc: Dale Gable; Jarrett, James F
Subject: RE: MarkWest Sherwood Gas Plant

Ed, please see below and attached answers to your questions.

From: Andrews, Edward S [mailto:Edward.S.Andrews@wv.gov]
Sent: Thursday, March 26, 2015 9:32 AM
To: Nathan Wheldon
Cc: Dale Gable; Jarrett, James F
Subject: MarkWest Sherwood Gas Plant

Nathan: I was seeing if you have seen the affidavit of publication. Last I spoke with it should have been published and forwarded to me. I am still waiting on it. If it has been sent in, could you e-mail me a scanned in copy. Please see attached for the signed affidavit of publication.

The application did not include a process flow diagram. I would like to have a P&I diagram of the deethanization unit, stabilizers, and of the cryogenic units. See attached for the PFDs of the process.

For Subpart OOOO LDAR compliance, are there any existing components being vented to the existing flare? If so, please identify the affected component. For the proposed new processing units, are any components being vented to the new flare as part of meeting the LDAR requirements of Subpart OOOO? If so, please identify them on the P&I diagrams. Components are not vented to the flare as part of LDAR. This includes both the existing and proposed facilities.

Please identify the source of the fuel for the heaters (preprocessed pipeline gas, after extraction, process gas)? I need the total sulfur and H2S loading of the supply stream. The source of fuel will be residue gas from the outlet of the plant. I have attached a fuel gas analysis for your perusal. In this area of the Marcellus there are not identifiable amounts of sulfur compounds in the fuel.

In the application for the flare, there are several cases listed in the September 25, 2014 proposal. Could you provide estimate of duration for these cases? Would there be a continuous purge vent or other waste stream going to the flare? I need the H2S loading of any waste stream being vent to the flare. The flare emission needs to include the emissions generated from combusting the waste gases vented to the flare. Speaking with my engineers the longest possible case would be 30 minutes, most cases would be much shorter than that. It is all dependent upon the problem that is causing the relief to begin with. There is a continuous purge on the flare and that is identified and calculated in the emissions from the flare, if you look at table N on the flare sheet you will see that there is gas usage for the pilot light and a separate line for the purge gas and both are included in the emission estimate for the flare. Other than those there is nothing calculated for the flare emissions as there are no regular ventings to the flare there is only emergency releases during a period of malfunction or shut down. We cannot predict when emergencies will happen and what the gas flow will be to the flare in any given emergency so those are not required to be submitted in the application. As with the fuel gas there are not measurable amounts of sulfur in any gas stream at the Sherwood Plant.

Should you have any questions, please contact me.

Sincerely,

Edward S. Andrews, P.E.
Engineer
West Virginia Department of Environmental Protection
Division of Air Quality
601 57th Street, SE
Charleston, WV 25304
304.926.0499 ext. 1214

Andrews, Edward S

From: Nathan Wheldon <Nathan.Wheldon@markwest.com>
Sent: Tuesday, April 07, 2015 9:40 AM
To: Andrews, Edward S
Subject: RE: MarkWest Sherwood Gas Plant

Thanks Ed. This approach sounds great. I look forward to your questions and first draft of the permit.

From: Andrews, Edward S [mailto:Edward.S.Andrews@wv.gov]
Sent: Friday, March 27, 2015 11:10 AM
To: Nathan Wheldon
Subject: RE: MarkWest Sherwood Gas Plant

Nathan: Thank-you for the quick turn around on to my request for additional information. I will try to put together my understanding of your deehanizer process with regards to the process heater exclusion under Subpart Db and forward it back to you to review. Once the Subpart Db exclusion is justified, the rest of my review should be straight forward.

Over the next couple of weeks, I will give you a list of items that I with need your input on in developing an understandable permit. The approach that kind of works best for me is that I will develop a pre-draft permit (working document) for MarkWest to review and make suggestions. I will put my style of permit writing on this pre-draft. Existing conditions that are one time requirements (i.e. initial notifications) or conditions that are not or no longer applicable, I will be omitting, which means I need I might be asking a lot questions that are not relative to this actual project. I like to see clean and straightforward permit leave my desk at the end of day.

Should you have any questions, please contact me.

Sincerely,

Edward S. Andrews, P.E.
Engineer
West Virginia Department of Environmental Protection
Division of Air Quality
601 57th Street, SE
Charleston, WV 25304
304.926.0499 ext. 1214

From: Nathan Wheldon [mailto:Nathan.Wheldon@markwest.com]
Sent: Friday, March 27, 2015 11:03 AM
To: Andrews, Edward S
Cc: Dale Gable; Jarrett, James F
Subject: RE: MarkWest Sherwood Gas Plant

Ed, please see below and attached answers to your questions.

From: Andrews, Edward S [mailto:Edward.S.Andrews@wv.gov]
Sent: Thursday, March 26, 2015 9:32 AM
To: Nathan Wheldon

Cc: Dale Gable; Jarrett, James F
Subject: MarkWest Sherwood Gas Plant

Nathan: I was seeing if you have seen the affidavit of publication. Last I spoke with it should have been published and forwarded to me. I am still waiting on it. If it has been sent in, could you e-mail me a scanned in copy. Please see attached for the signed affidavit of publication.

The application did not include a process flow diagram. I would like to have a P&I diagram of the deethanization unit, stabilizers, and of the cryogenic units. See attached for the PFDs of the process.

For Subpart OOOO LDAR compliance, are there any existing components being vented to the existing flare? If so, please identify the affected component. For the proposed new processing units, are any components being vented to the new flare as part of meeting the LDAR requirements of Subpart OOOO? If so, please identify them on the P&I diagrams. Components are not vented to the flare as part of LDAR. This includes both the existing and proposed facilities.

Please identify the source of the fuel for the heaters (preprocessed pipeline gas, after extraction, process gas)? I need the total sulfur and H2S loading of the supply stream. The source of fuel will be residue gas from the outlet of the plant. I have attached a fuel gas analysis for your perusal. In this area of the Marcellus there are not identifiable amounts of sulfur compounds in the fuel.

In the application for the flare, there are several cases listed in the September 25, 2014 proposal. Could you provide estimate of duration for these cases? Would there be a continuous purge vent or other waste stream going to the flare? I need the H2S loading of any waste stream being vent to the flare. The flare emission needs to include the emissions generated from combusting the waste gases vented to the flare. Speaking with my engineers the longest possible case would be 30 minutes, most cases would be much shorter than that. It is all dependent upon the problem that is causing the relief to begin with. There is a continuous purge on the flare and that is identified and calculated in the emissions from the flare, if you look at table N on the flare sheet you will see that there is gas usage for the pilot light and a separate line for the purge gas and both are included in the emission estimate for the flare. Other than those there is nothing calculated for the flare emissions as there are no regular ventings to the flare there is only emergency releases during a period of malfunction or shut down. We cannot predict when emergencies will happen and what the gas flow will be to the flare in any given emergency so those are not required to be submitted in the application. As with the fuel gas there are not measurable amounts of sulfur in any gas stream at the Sherwood Plant.

Should you have any questions, please contact me.

Sincerely,

Edward S. Andrews, P.E.
Engineer
West Virginia Department of Environmental Protection
Division of Air Quality
601 57th Street, SE
Charleston, WV 25304
304.926.0499 ext. 1214

Andrews, Edward S

From: Keatley, Robert L
Sent: Thursday, April 02, 2015 11:35 AM
To: Jarrett, James F; Fenton, Richard W
Cc: Andrews, Edward S
Subject: RE: MarkWest sherwood

I think Ed was just there yesterday.

ID # 12-34
Reg R13-2814C
Company MarkWest
Facility Sherwood Initials EA

-----Original Message-----
From: Jarrett, James F
Sent: Thursday, April 02, 2015 7:46 AM
To: Fenton, Richard W; Keatley, Robert L
Subject: MarkWest sherwood

I'm witnessing MarkWest sherwood compressor engine stack test today

Sent from my iPhone

Entire Document
NON-CONFIDENTIAL

Andrews, Edward S

From: Andrews, Edward S
Sent: Tuesday, March 31, 2015 7:48 AM
To: Keatley, Robert L; Jarrett, James F
Cc: Mckeone, Beverly D
Subject: FW: Sherwood Gas Plant - Deethanization Heater
Attachments: Subpart Db applicability letter.pdf

Attached is an in depth explanation of the MarkWest's deethanization heater with regards to applicability to Subpart Db. Please review this and see if you agree with their conclusion that the heater falls within the process heater exclusion of Subpart Db. It looks kind of straight forward to me.

FYI: MarkWest has claimed that they are using the same process at the Majorsville Gas Plant.

Thanks,
Ed

From: Dan Michaud [mailto:Dan.Michaud@markwest.com]
Sent: Friday, March 27, 2015 4:34 PM
To: Andrews, Edward S
Cc: Nathan Wheldon
Subject: Sherwood Gas Plant - Deethanization Heater

ID # 17-31
Reg R13-2E/KC
Company MarkWest
Facility Sherwood Initials [illegible]

Mr. Andrews,

The attached letter is being sent at the request of Nathan Wheldon. The letter intends to help clarify previous discussions regarding the deethanization heater at the Sherwood Gas Plant.

Thank you,

Dan M. Michaud
Senior Environmental Engineer
MarkWest Energy Partners, L.P.
1515 Arapahoe St., Tower 1, Suite 1600
Denver, CO 80202-2137
Direct: (303) 542-1212
Cell: (720) 891-0064
Email: dmichaud@markwest.com

Andrews, Edward S

From: Dan Michaud <Dan.Michaud@markwest.com>
Sent: Friday, March 27, 2015 4:34 PM
To: Andrews, Edward S
Cc: Nathan Wheldon
Subject: Sherwood Gas Plant - Deethanization Heater
Attachments: Subpart Db applicability letter.pdf

Mr. Andrews,

The attached letter is being sent at the request of Nathan Wheldon. The letter intends to help clarify previous discussions regarding the deethanization heater at the Sherwood Gas Plant.

Thank you,

Dan M. Michaud
Senior Environmental Engineer
MarkWest Energy Partners, L.P.
1515 Arapahoe St., Tower 1, Suite 1600
Denver, CO 80202-2137
Direct: (303) 542-1212
Cell: (720) 891-0064
Email: dmichaud@markwest.com

ID # 17-34
Reg R13-29 KC
Company MarkWest
Facility Elevator Initials EJC

Entire Document
NON-CONFIDENTIAL

Dear Mr. Andrews,

This summary letter is written in response to your questions about the applicability of NSPS Subpart Db to the Deethanizer Heater (D1-H-782), which has fire-rated capacity of 113.36 mmbtu/hr. MarkWest maintains that the Deethanizer heater is a process heater and thus exempt from the requirements of Subpart Db. The following paragraphs will explain why the heater should be considered a process heater.

Uses of the Deethanization Heater

Your latest request asked for a description of the chemical reaction that is taking place in the deethanizer which requires the heat energy from the deethanization heater. The purpose of the deethanization heater is to supply heat for the deethanization process which prepares purity ethane to go to market by removing it from the mixed natural gas liquid stream and removing CO_2 to meet pipeline specifications. This purpose is achieved using two heated streams as described below.

One portion of the heat from the deethanization heater is distributed to the deethanization tower. The deethanization tower receives Y-grade liquids (this is the natural gas liquid stream from a cryogenic plant that contains liquid ethane and heavier hydrocarbons) that are trickled down through a series of trays within the tower. As heat is introduced to the tower, the ethane will vaporize and rise out the top of the tower while the remaining Y-grade flows through the bottom of the tower and is sent to storage. Heat is introduced to the tower by heating a portion of the Y-Grade stream through a heat exchanger and reinjecting it into the tower.

Another portion of the heat from the deethanization heater is distributed to the Amine Still. Once ethane has been recovered from the deethanization tower there is a percentage of CO_2 that is entrained with the ethane. The CO_2 must be removed to meet purity standards for ethane and to prevent freezing in the ethane pipeline. The CO_2 is removed in the Amine Contactor by sending a liquid stream of proprietary 'lean' amine solution (referenced as RNH_2) down through a rising stream of gaseous ethane. As the amine solution contacts the ethane the amine absorbs and forms a chemical bond with the CO_2 to create a 'rich' amine solution, which is described in the following equations:

$$2RNH_2 + CO_2 \leftrightarrow RNH_3^+ + RNHCOO^-$$

$$RNH_2 + CO_2 + H_2O \leftrightarrow RNH_3^+ + HCO_3^-$$

$$RNH_2 + HCO_3^- \leftrightarrow RNH_3^+ + CO_3^{--}$$

This 'rich' amine solution is then routed through the Amine Still where it can be regenerated, meaning the chemical reaction will be reversed thus freeing the CO_2 from the chemical bond with the amine solution. The 'rich' amine solution is introduced near the top of the tower and descends through a series of trays. As heat is instroduced to the 'rich' amine solution, the chemical bond is reversed and the CO_2 rises out the top of the tower. The amine solution is again 'lean' and flows through the bottom of the tower to be recycled and used again in the process. Heat is introduced to the Amine Still by heating a portion of the 'lean' amine through a heat exchanger and reinjecting it into the tower. The heated

amine provides heat for the reaction and participates in the chemical reaction as a catalyst per the formulas listed above.

Process Heater Definitions

In light of EPA statements that it has intentions to bring harmony to regulations in NSPS and NESHAPS MarkWest would like to bring attention to recent EPA rulemaking and definitions of the term "process heater". The term process heater was recently defined in the Boiler and Process Heater MACT, 40 CFR 63.7575 NESHAP Subpart DDDDD:

> "*Process heater* means an enclosed device using controlled flame, and the unit's primary purpose is to transfer heat indirectly to a process material (liquid, gas or solid) or to a heat transfer material (e.g., glycol or a mixture of glycol and water) for use in a process unit, instead of generating steam. Process heaters are devices in which the combustion gases do not come into direct contact with process materials."

In addition to the Boiler and Process Heater MACT, the Standards for Petroleum Refineries, 40 CFR 60.101a, NSPS Subpart Ja define process heater as:

> "*Process heater* means an enclosed combustion device used to transfer heat indirectly to process stream materials (liquids, gases, or solids) or to a heat transfer material for use in a process unit instead of steam."

Each of these rulemakings are more recent than the NSPS Subpart Db and the definitions in these rulemakings are similar and consistent. The Boiler and Process Heater MACT was designed specifically for regulation of process heater. The combination of these factors indicates that the deethanization heater is fully intended to be a process heater and is therefore exempt from regulated under NSPS Subpart Db.

Processing Unit Definition

In addition to the above definition of process heaters, the EPA has defined a process unit in both the NSPS Subpart KKK and NSPS Subpart OOOO as follows:

> "*Process unit* means components assembled for the extraction of natural gas liquids from field gas, the fractionation of the liquids into natural gas products, or other operations associated with the processing of natural gas products. A process unit can operate independently if supplied with sufficient feed or raw materials and sufficient storage facilities for the products."

MarkWest is subject to and adheres to NSPS Subpart OOOO because the deethanization process at the Sherwood Plant fits the very definition of process unit. The heater for the deethanizer at the Sherwood Gas Plant supplies heat only for the processes as described in the definition of process unit, thus the heater is nothing other than a process heater.

Conclusion

MarkWest believes that the heater for the deethanizer is a process heater and is exempt from NSPS Subpart Db. The heater is considered a process heater in the definition of the word in EPA regulations NSPS Subpart Ja, KKK, OOOO and NESHAP DDDDD. Additionally, even using a narrow interpretation of the word process heater as defined in NSPS Subpart Db the heater still meets the definition as described above by heating a heat transfer medium that participates in a chemical reaction in the Amine Still.

Thank you for your consideration in the matter. If you have any questions please do not hesitate to contact me at nwheldon@markwest.com or (303)-542-0686.

Nathan Wheldon

Andrews, Edward S

From: Andrews, Edward S
Sent: Friday, March 27, 2015 1:10 PM
To: 'Nathan Wheldon'
Subject: RE: MarkWest Sherwood Gas Plant

Nathan: Thank-you for the quick turn around on to my request for additional information. I will try to put together my understanding of your deehanizer process with regards to the process heater exclusion under Subpart Db and forward it back to you to review. Once the Subpart Db exclusion is justified, the rest of my review should be straight forward.

Over the next couple of weeks, I will give you a list of items that I with need your input on in developing an understandable permit. The approach that kind of works best for me is that I will develop a pre-draft permit (working document) for MarkWest to review and make suggestions. I will put my style of permit writing on this pre-draft. Existing conditions that are one time requirements (i.e. initial notifications) or conditions that are not or no longer applicable, I will be omitting, which means I need I might be asking a lot questions that are not relative to this actual project. I like to see clean and straightforward permit leave my desk at the end of day.

Should you have any questions, please contact me.

Sincerely,

Edward S. Andrews, P.E.
Engineer
West Virginia Department of Environmental Protection
Division of Air Quality
601 57th Street, SE
Charleston, WV 25304
304.926.0499 ext. 1214

ID # 12-34
Reg R13-29NC
Company MarkWest
Facility Sherwood Initials EAA

From: Nathan Wheldon [mailto:Nathan.Wheldon@markwest.com]
Sent: Friday, March 27, 2015 11:03 AM
To: Andrews, Edward S
Cc: Dale Gable; Jarrett, James F
Subject: RE: MarkWest Sherwood Gas Plant

Entire Document
NON-CONFIDENTIAL

Ed, please see below and attached answers to your questions.

From: Andrews, Edward S [mailto:Edward.S.Andrews@wv.gov]
Sent: Thursday, March 26, 2015 9:32 AM
To: Nathan Wheldon
Cc: Dale Gable; Jarrett, James F
Subject: MarkWest Sherwood Gas Plant

Nathan: I was seeing if you have seen the affidavit of publication. Last I spoke with it should have been published and forwarded to me. I am still waiting on it. If it has been sent in, could you e-mail me a scanned in copy. Please see attached for the signed affidavit of publication.

The application did not include a process flow diagram. I would like to have a P&I diagram of the deethanization unit, stabilizers, and of the cryogenic units. See attached for the PFDs of the process.

For Subpart OOOO LDAR compliance, are there any existing components being vented to the existing flare? If so, please identify the affected component. For the proposed new processing units, are any components being vented to the new flare as part of meeting the LDAR requirements of Subpart OOOO? If so, please identify them on the P&I diagrams. Components are not vented to the flare as part of LDAR. This includes both the existing and proposed facilities.

Please identify the source of the fuel for the heaters (preprocessed pipeline gas, after extraction, process gas)? I need the total sulfur and H2S loading of the supply stream. The source of fuel will be residue gas from the outlet of the plant. I have attached a fuel gas analysis for your perusal. In this area of the Marcellus there are not identifiable amounts of sulfur compounds in the fuel.

In the application for the flare, there are several cases listed in the September 25, 2014 proposal. Could you provide estimate of duration for these cases? Would there be a continuous purge vent or other waste stream going to the flare? I need the H2S loading of any waste stream being vent to the flare. The flare emission needs to include the emissions generated from combusting the waste gases vented to the flare. Speaking with my engineers the longest possible case would be 30 minutes, most cases would be much shorter than that. It is all dependent upon the problem that is causing the relief to begin with. There is a continuous purge on the flare and that is identified and calculated in the emissions from the flare, if you look at table N on the flare sheet you will see that there is gas usage for the pilot light and a separate line for the purge gas and both are included in the emission estimate for the flare. Other than those there is nothing calculated for the flare emissions as there are no regular ventings to the flare there is only emergency releases during a period of malfunction or shut down. We cannot predict when emergencies will happen and what the gas flow will be to the flare in any given emergency so those are not required to be submitted in the application. As with the fuel gas there are not measurable amounts of sulfur in any gas stream at the Sherwood Plant.

Should you have any questions, please contact me.

Sincerely,

Edward S. Andrews, P.E.
Engineer
West Virginia Department of Environmental Protection
Division of Air Quality
601 57th Street, SE
Charleston, WV 25304
304.926.0499 ext. 1214

Monthly Meter Analysis

March, 2015

MARKWEST ENERGY PARTNERS, LP

Meter #: 018-0043
Name: SHERWOOD PLANT 5 FUEL
SHERWOOD

Sample
Date: 03/26/2015
Type: Online
Pressure: 1072.6 H2O: lbs/mm
Temperature: 99.3 H2S: ppm

Component	Mole %	Liquid Content	Mass %
Carbon Dioxide, CO2	0.1661		0.4049
Nitrogen, N2	0.4083		0.6335
Methane, C1	86.0258		76.4328
Ethane, C2	13.1309	3.5199	21.8671
Propane, C3	0.2640	0.0729	0.6447
Isobutane, iC4	0.0035	0.0011	0.0112
n-Butane, nC4	0.0018	0.0005	0.0057
Isopentane, iC5	0.0000	0.0000	0.0000
n-Pentane, nC5	0.0000	0.0000	0.0000
Hexanes, C6	0.0000	0.0000	0.0000
Heptanes, C7	0.0000	0.0000	0.0000
Octanes, C8	0.0000	0.0000	0.0000
Nonanes, C9	0.0000	0.0000	0.0000
Decanes Plus, C10+	0.0000	0.0000	0.0000
Water, H2O			
Hydrogen Sulfide, H2S			
Oxygen, O2	0.0000		0.0000
Carbon Monoxide, CO			
Hydrogen, H2			
Helium, He			
Argon, Ar	0.0000		0.0000
Totals	100.0004	3.5944	99.9999

Property	Total Sample
Pressure Base	14.730
Temperature Base	60.00
Relative Density	0.6248
HV, Dry @ Base P,T	1113.50
HV, Sat @ Base P, T	1094.13
HV, Sat @ Sample P, T	1112.49
Fws Factor	0.0000
Cricondentherm	
HCDP @ Sample Pressure	
Free Water GPM	
Stock Tank Condensate Brls/mm	
26 # RVP Gasoline	0.000
Testcar Permian	0.403
Testcar Panhandle	0.352
Testcar Midcon	0.553

*** End of Report ***

Copyright © 2009 - 2015 Flow-Cal, Inc. Houston, Texas

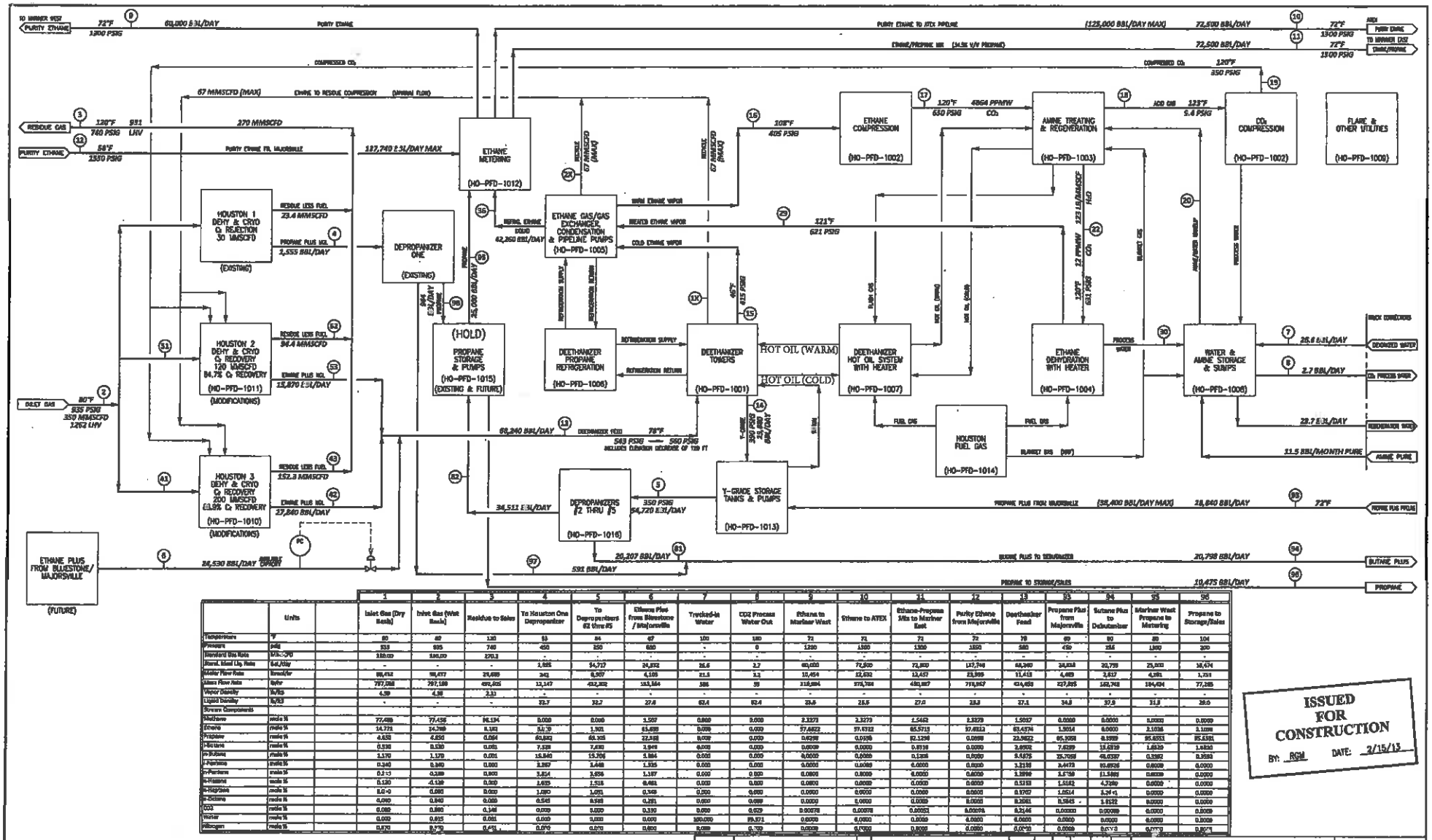

	1	2	3	4	5	6	7	8	9	10	11	12	13	95	94	95	96
	Units	Inlet Gas (Dry Basis)	Inlet Gas (Wet Basis)	Residue to Sales	To Houston One Depropanizer	To Depropanizers #2 thru #5	Ethane Plus from Bluestone / Majorsville	Trucked-in Water	CO2 Process Water Out	Ethane to Mariner West	Ethane to ATEX	Ethane-Propane Mix to Mariner East	Purity Ethane from Majorsville	Deethanizer Feed	Propane Plus from Majorsville	Butane Plus to Debutanizer	Mariner West Propane to Metering	Propane to Storage/Sales
Temperature	°F	80	80	120	93	84	67	100	180	72	72	72	72	78	89	80	80	104
Pressure	psig	933	935	760	450	250	600	-	0	1200	1300	1300	1850	580	450	250	1,000	200
Standard Gas Rate	MSCFD	330,000	330,000	270.3	-	-	-	-	-	-	-	-	-	-	-	-	-	-
Stand. Liquid Liq. Rate	bbl/day	-	-	-	2,885	54,717	24,892	25.6	2.7	60,000	72,500	72,500	137,748	68,240	34,038	20,798	25,000	10,474
Molar Flow Rate	lbmol/hr	98,472	98,477	29,688	342	6,007	4,105	21.5	3.1	10,454	12,632	12,637	23,995	11,413	4,489	2,617	4,381	1,751
Mass Flow Rate	lb/hr	797,288	797,289	492,205	12,147	432,332	153,164	386	59	218,884	278,788	482,867	758,957	424,458	227,895	162,762	194,624	77,285
Vapor Density	lb/ft3	4.39	4.38	2.11	-	-	-	-	-	-	-	-	-	-	-	-	-	-
Liquid Density	lb/ft3	-	-	-	32.7	32.7	27.8	62.4	62.4	29.6	28.5	27.0	28.3	27.1	34.3	37.9	31.3	28.5
Stream Components																		
Methane	mole %	77.488	77.486	96.134	0.000	0.000	1.557	0.000	0.000	2.3373	2.3279	2.5453	1.3379	1.5037	0.0000	0.0000	0.0000	0.0000
Ethane	mole %	14.771	14.769	3.183	51.79	1.301	83.698	0.000	0.000	97.6622	97.6722	95.5713	97.6823	93.4734	1.3014	0.0000	2.1036	2.1206
Propane	mole %	4.655	4.656	0.564	60.532	68.105	12.348	0.000	0.000	0.0298	0.0298	1.8298	0.0298	2.9622	65.7058	0.3959	95.8351	95.8351
i-Butane	mole %	0.530	0.530	0.001	7.528	7.680	1.948	0.000	0.000	0.0039	0.0039	0.0918	0.0039	0.4902	7.8239	18.8219	1.8839	1.8839
n-Butane	mole %	1.170	1.170	0.001	15.840	15.706	1.884	0.000	0.000	0.0000	0.0000	0.1308	0.0000	0.5675	25.7058	48.0397	0.3982	0.3982
i-Pentane	mole %	0.340	0.340	0.000	3.267	3.448	1.935	0.000	0.000	0.0000	0.0000	0.0000	0.0000	0.1218	3.4473	10.6926	0.0839	0.0000
n-Pentane	mole %	0.213	0.339	0.000	3.814	3.956	1.197	0.000	0.000	0.0000	0.0000	0.0000	0.0000	0.1396	3.5758	11.5886	0.0000	0.0000
n-Hexane	mole %	0.130	0.130	0.000	1.625	1.516	0.481	0.000	0.000	0.0000	0.0000	0.0000	0.0000	0.5218	1.5182	4.7280	0.0000	0.0000
n-Heptane	mole %	0.040	0.040	0.000	1.230	1.051	0.348	0.000	0.000	0.0000	0.0000	0.0000	0.0000	0.5707	1.0514	3.2471	0.0000	0.0000
n-Octane	mole %	0.000	0.040	0.000	0.540	0.508	0.201	0.000	0.000	0.0000	0.0000	0.0000	0.0000	0.2081	0.5045	1.5122	0.0000	0.0000
CO2	mole %	0.082	0.080	0.148	0.000	0.000	0.230	0.000	0.000	0.0078	0.0078	0.0055	0.0078	0.2146	0.0000	0.0000	0.0000	0.0000
Water	mole %	0.000	0.015	0.001	0.000	0.000	0.000	100.000	99.971	0.0000	0.0000	0.0000	0.0000	0.0000	0.0000	0.0000	0.0000	0.0000
Nitrogen	mole %	0.870	0.870	0.451	0.000	0.000	0.000	0.000	0.029	0.0000	0.0000	0.0000	0.0000	0.0000	0.0000	0.0000	0.0000	0.0000

ISSUED FOR CONSTRUCTION
BY: RGM DATE: 2/15/13

REFERENCE	NO.	REVISION-DESCRIPTION	DATE	BY	CHK'D	APP'D
	0	ISSUE FOR CONSTRUCTION	2/15/13	RS	RGM	JF

MARKWEST
MarkWest Energy Partners, L.P.

PROCESS FLOW DIAGRAM
DEETHANIZER BLOCK FLOW
HOUSTON GAS PLANT
WASHINGTON Co. PENNSYLVANIA

ARE		
DRAWN	RGM	DATE 01/25/13
CHK'D		DATE
ENG APP'D		DATE
MFGR APP'D		DATE
APPD		DATE
PROJECT NO.		
DRAWING NO.	HO-PFD-1000	REV. NO. 0

K:\Engineering Department\NEBU\Engineering\Houston DeEthanizer\Construction Drawings\PFD\HO-PFD-1000.dwg, 2/15/2013 2:39:12 PM, ryan.rosso

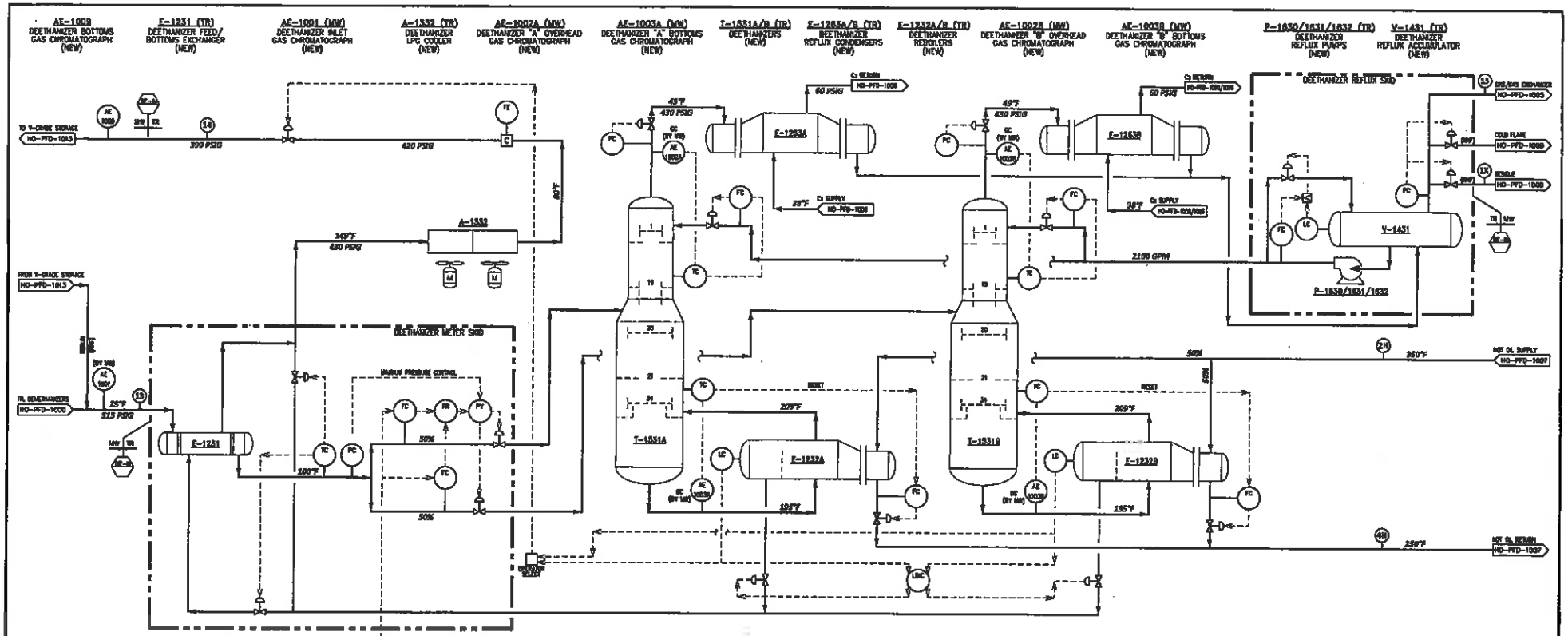

	Units		13 C2+ to Feed/Bottoms Exchanger	14 C3+ from Deethanizer to Storage	15 Purity C2 to Gas/Gas Exch	2H Hot Oil Supply to both Reboilers	4H Hot Oil Return to both Reboilers
Temperature	°F		78	110	46	880	250
Pressure	psig		580	390	415	-	-
Standard Gas Rate	MMSCFD		-	-	87.29	-	-
Standard Liquid Rate	BBL/day		68,340	25,684	-	-	-
Molar Flow Rate	lbmol/hr		11,419	4,034	7,384	-	-
Mass Flow Rate	lb/hr		424,653	304,569	320,148	1,306,270	1,306,270
Vapor Density	lb/ft3		-	-	3.79	-	-
Liquid Density	lb/ft3		27.3	32.0	23.8	46.4	51.0
Stream Components							
Methane	mole %		1.902	0.000	2.330	-	-
Ethane	mole %		68.457	1.302	97.305	-	-
Propane	mole %		22.982	85.107	0.040	-	-
I-Butane	mole %		2.[illegible]0	7.630	0.000	-	-
n-Butane	mole %		3.837	15.705	0.000	-	-
I-Pentane	mole %		1.235	2.447	0.000	-	-
n-Pentane	mole %		1.289	3.656	0.000	-	-
n-Hexane	mole %		0.835	2.518	0.000	-	-
n-Heptane	mole %		0.373	1.051	0.000	-	-
n-Octane	mole %		0.206	0.584	0.000	-	-
CO2	mole %		0.215	0.000	0.031	-	-
Water	mole %		0.000	0.000	0.000	-	-
Nitrogen	mole %		0.000	0.000	0.000	-	-

(NNF) = NOT NORMALLY FLOWING

ISSUED FOR CONSTRUCTION
BY: RGM DATE: 2/15/13

REFERENCE	NO.	REVISION-DESCRIPTION	DATE	DRAWN	CHKD	DIV. APP'D	PROCESS APP'D	PROJECT APP'D
	0	ISSUE FOR CONSTRUCTION	2/15/13	R	RGM		JF	

MARKWEST
MarkWest Energy Partners, L.P.

PROCESS FLOW DIAGRAM
DEETHANIZER TOWERS
HOUSTON GAS PLANT
WASHINGTON Co. PENNSYLVANIA

APP'D RGM DATE 01/23/13
DRAWN: DATE:
DIV. APP'D: DATE:
PROCESS APP'D: DATE:
PROJECT APP'D: DATE:
SCALE: NONE DWG. NO. HO-PFD-1001
DRAWING NO. HO-PFD-1001 REV. 0

K:\Engineering Department\NEBU\Engineering\Houston DeEthanizer\Construction Drawings\PFD\HO-PFD-1001.dwg, 2/15/2013 2:45:26 PM, ryan.rzosa

K:\Engineering Department\WEBU\Engineering\Houston DeEthanizer\Construction Drawings\PFD\HO-PFD-1002.dwg, 2/15/2013 1:34:22 PM, ryan.rose

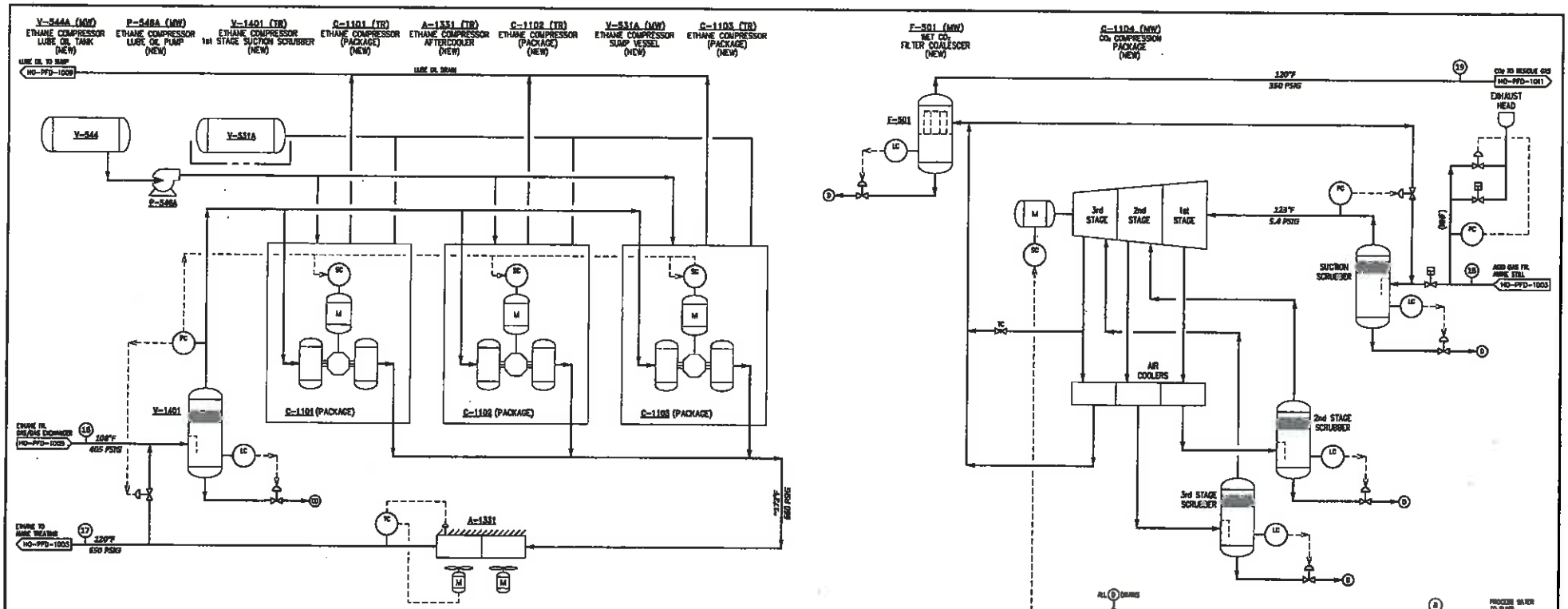

	Units		15 CO2 Process Water Out	16 Ethane to Compression	17 Ethane from Compression to Treating	18 Acid Gas from Amine Still	19 CO2 to Residue Gas
Temperature	°F		106	106	120	123	120
Pressure	psig		9	405	650	5.4	350
Standard Gas Rate	MMSCFD		-	97.29	97.29	0.26	0.23
Standard Liquid Rate	B-1/day		3.7	-	-	-	-
Molar Flow Rate	lbmol/hr		2.2	7,386	7,388	27	18
Mass Flow Rate	lb/hr		39	220,146	220,146	1,123	1,083
Vapor Density	lb/ft3		-	2.85	4.84	0.13	2.90
Liquid Density	lb/ft3		62.4	-	-	-	-
Stream Components							
Methane	mole %		0.000	2.330	2.330	0.639	0.021
Ethane	mole %		0.000	97.309	97.309	0.888	0.937
Propane	mole %		0.000	0.098	0.098	0.000	0.000
Isobutane	mole %		0.000	0.000	0.000	0.000	0.000
n-Butane	mole %		0.000	0.000	0.000	0.000	0.000
i-Pentane	mole %		0.000	0.000	0.000	0.000	0.000
n-Pentane	mole %		0.000	0.000	0.000	0.000	0.000
n-Hexane	mole %		0.000	0.000	0.000	0.000	0.000
n-Heptane	mole %		0.000	0.000	0.000	0.000	0.000
n-Octane	mole %		0.000	0.000	0.000	0.000	0.000
CO2	mole %		0.029	0.331	0.331	90.709	98.709
Water	mole %		99.971	0.008	0.000	8.665	0.897
Nitrogen	mole %		0.000	0.000	0.000	0.000	0.000

ISSUED FOR CONSTRUCTION
BY: RGM DATE: 2/15/13

REFERENCE	NO.	REVISION DESCRIPTION	DATE	DRAWN	CHK'D	ENG APP'D	PROCESS APP'D	CONSTR APP'D
	0	ISSUE FOR CONSTRUCTION	2/15/13	RR	RGM		JT	

MARKWEST
MarkWest Energy Partners, L.P.

PROCESS FLOW DIAGRAM
DEETHANIZER
ETHANE & CO2 COMPRESSION
Wilkinson Co. HOUSTON GAS PLANT PENNSYLVANIA

APP.	
DRAWN RGM	DATE 02/28/13
CHK'D	DATE
ENG APP'D	DATE
PROCESS APP'D	DATE
CONSTR APP'D	DATE
SCALE NONE	DWG. NO. HO-PFD-1002
DRAWING NO. HO-PFD-1002	REV. 0

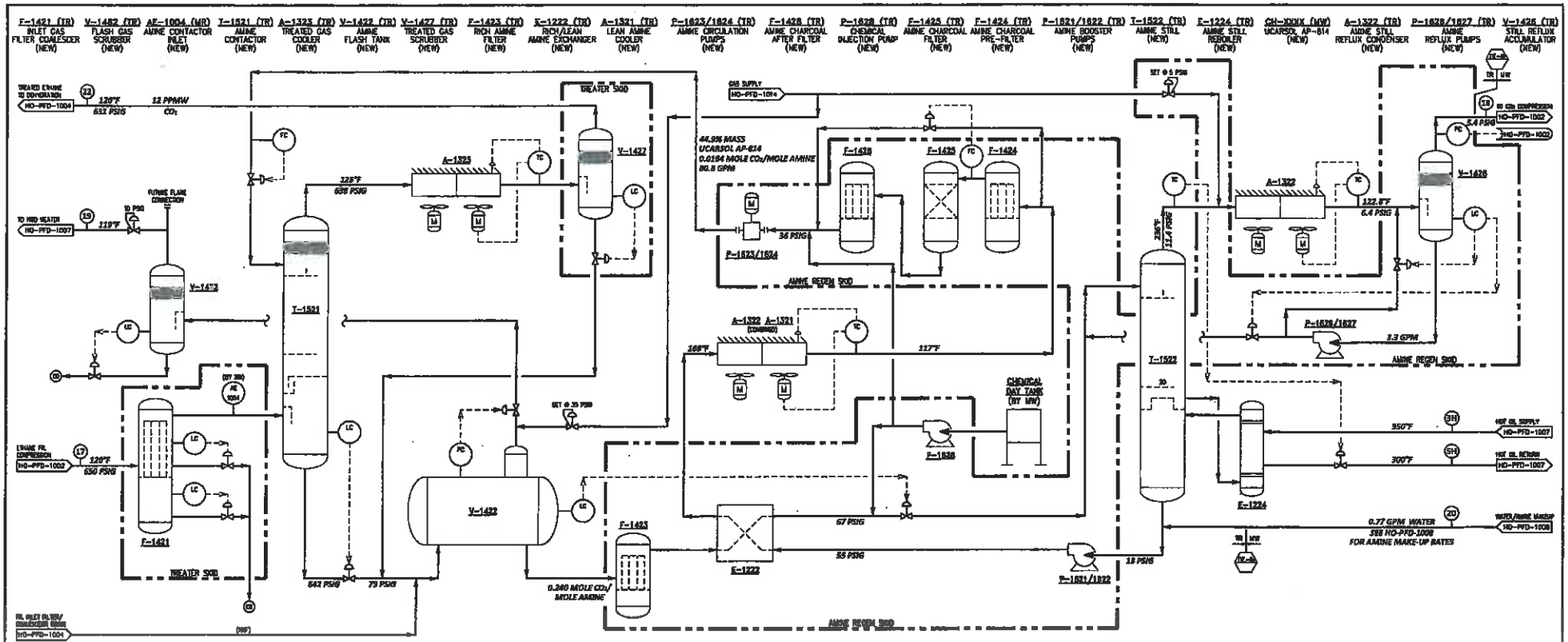

	Units		17 Ethane from Compression	18 Acid Gas to CO2 Compression	19 Flash Gas to HMO Heater	20 Water Makeup to Amine	22 Treated Ethane to Dehydration	3 H Hot Oil Supply	5H Hot Oil Return
Temperature	°F		120	120	119	100	120	350	300
Pressure	psig		660	5.4	10	25	655	-	-
Standard Gas Rate	MMSCFD		97.38	0.35	0.01	-	97.23	-	-
Standard Liquid Rate	BBL/day		-	-	-	28.5	-	-	-
Molar Flow Rate	lbmol/hr		7,363	27	0.78	31.41	7,182	-	-
Mass Flow Rate	lb/hr		220,146	1,128	22.5	565.7	218,589	141,551	142,321
Vapor Density	lb/ft3		4.96	0.13	0.12	-	4.88	-	-
Liquid Density	lb/ft3		-	-	-	62.8	-	48.6	48.8
Stream Components									
Methane	mole %		2.330	0.030	3.200	0.000	2.321	-	-
Ethane	mole %		97.309	0.385	95.187	0.000	97.379	-	-
Propane	mole %		0.040	0.000	0.026	0.000	0.041	-	-
I-Butane	mole %		0.000	0.000	0.000	0.000	0.000	-	-
n-Butane	mole %		0.000	0.000	0.000	0.000	0.000	-	-
I-Pentane	mole %		0.000	0.000	0.000	0.000	0.000	-	-
n-Pentane	mole %		0.000	0.000	0.000	0.000	0.000	-	-
n-Hexane	mole %		0.000	0.000	0.000	0.000	0.000	-	-
n-Heptane	mole %		0.000	0.000	0.000	0.000	0.000	-	-
n-Octane	mole %		0.000	0.000	0.000	0.000	0.000	-	-
CO2	mole %		0.321	80.102	0.020	0.000	0.00076	-	-
Water	mole %		0.000	0.000	1.566	100.000	0.249	-	-
Nitrogen	mole %		0.000	0.373	0.000	0.000	0.000	-	-

ISSUED FOR CONSTRUCTION
BY: RGM DATE: 2/15/13

REFERENCE	NO.	REVISION - DESCRIPTION	DATE	DRAWN	CHKD	ENG. APP'D	PROD. APP'D	CONST. APP'D
	0	ISSUE FOR CONSTRUCTION	02/15/13	TP	RGM			

MARKWEST
MarkWest Energy Partners, L.P.

PROCESS FLOW DIAGRAM
DEETHANIZER
AMINE TREATING UNIT
HOUSTON GAS PLANT
WASHINGTON Co. PENNSYLVANIA

APP.		
DRAWN	RGM	02/13/13
CHECK		DATE
ENG. APP'D		DATE
PROD. APP'D		DATE
CONST. APP'D		DATE
SCALE	NONE	DWG. NO. HO-PFD-1003
DRAWING NO.		REV. 0

K:\Engineering Department\NEBU\Engineering\Houston DeEthanizer\Construction Drawings\PFD\HO-PFD-1003.dwg, 2/15/2013 1:36:07 PM, ryan.rosa

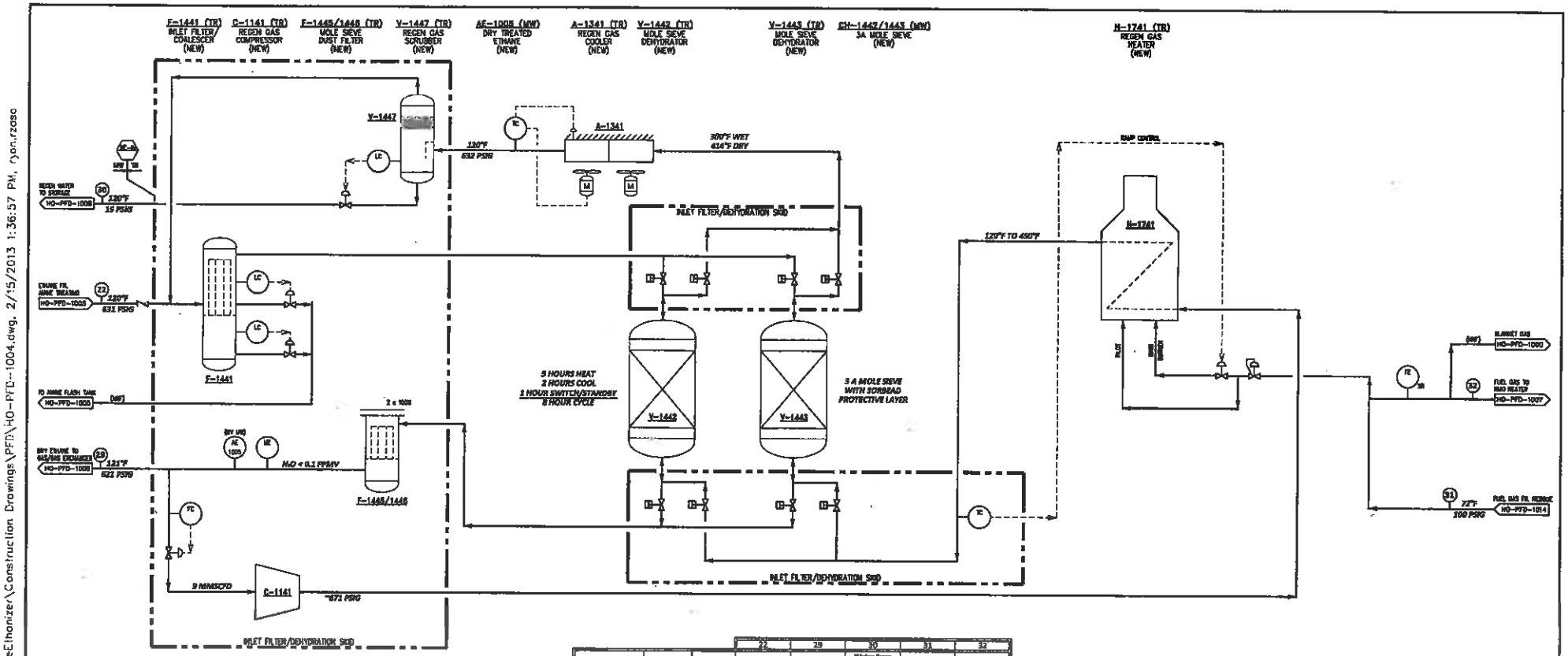

	Units		22 Treated Ethane to Dehydration	29 Dry Ethane to Gas/Gas Exch	30 Water from Regen KO (Avg. Rate)	31 Fuel Gas from Residue	32 Fuel Gas to HMO Heater
Temperature	°F		120	121	120	72	72
Pressure	psig		631	621	15	100	100
Standard Gas Rate	MMSCFD		67.25	67.06	-	2.87	2.78
Standard Liquid Rate	BBL/day		-	-	13.7	-	-
Molar Flow Rate	lbmol/hr		7,962	7,938	19.1	305.2	305.0
Mass Flow Rate	lb/hr		239,398	238,066	343.4	5,129	4,969
Vapor Density	lb/ft3		4.89	4.86	-	0.34	0.34
Liquid Density	lb/ft3		-	-	61.8	-	-
Stream Components							
Methane	mole %		2.821	2.327	0.000	97.924	97.924
Ethane	mole %		97.378	97.882	0.000	1.528	1.525
Propane	mole %		0.040	0.040	0.000	0.022	0.022
i-Butane	mole %		0.000	0.000	0.000	0.000	0.000
n-Butane	mole %		0.000	0.000	0.000	0.000	0.000
i-Pentane	mole %		0.000	0.000	0.000	0.000	0.000
n-Pentane	mole %		0.000	0.000	0.000	0.000	0.000
n-Hexane	mole %		0.000	0.000	0.000	0.000	0.000
n-Heptane	mole %		0.000	0.000	0.000	0.000	0.000
n-Octane	mole %		0.000	0.000	0.000	0.000	0.000
CO2	mole %		0.00078	0.00078	0.000	0.058	0.058
Water	mole %		0.280	0.000	100.000	0.0000	0.0000
Nitrogen	mole %		0.000	0.000	0.000	0.470	0.470

(INF) = NOT NORMALLY FLOWING

ISSUED FOR CONSTRUCTION
BY: RGM DATE: 2/15/13

REFERENCE	NO.	REVISION-DESCRIPTION	DATE	DRAWN	CHK'D	DSG. APP'D	PROCESS APP'D	DIRECTOR APP'D
	0	ISSUE FOR CONSTRUCTION	2/15/13	RB	RGM		J	

MARKWEST
MarkWest Energy Partners, L.P.

PROCESS FLOW DIAGRAM
DEETHANIZER
ETHANE DEHYDRATION
HOUSTON GAS PLANT
WASHINGTON Co. PENNSYLVANIA

DRAWN: RGM DATE: 01/25/12
DWG NO. HO-PFD-1004 REV. 0

K:\Engineering Department\HEBU\Engineering\Houston DeEthanizer\Construction Drawings\PFD\HO-PFD-1004.dwg, 2/15/2013 1:36:57 PM, ryan.rzaso

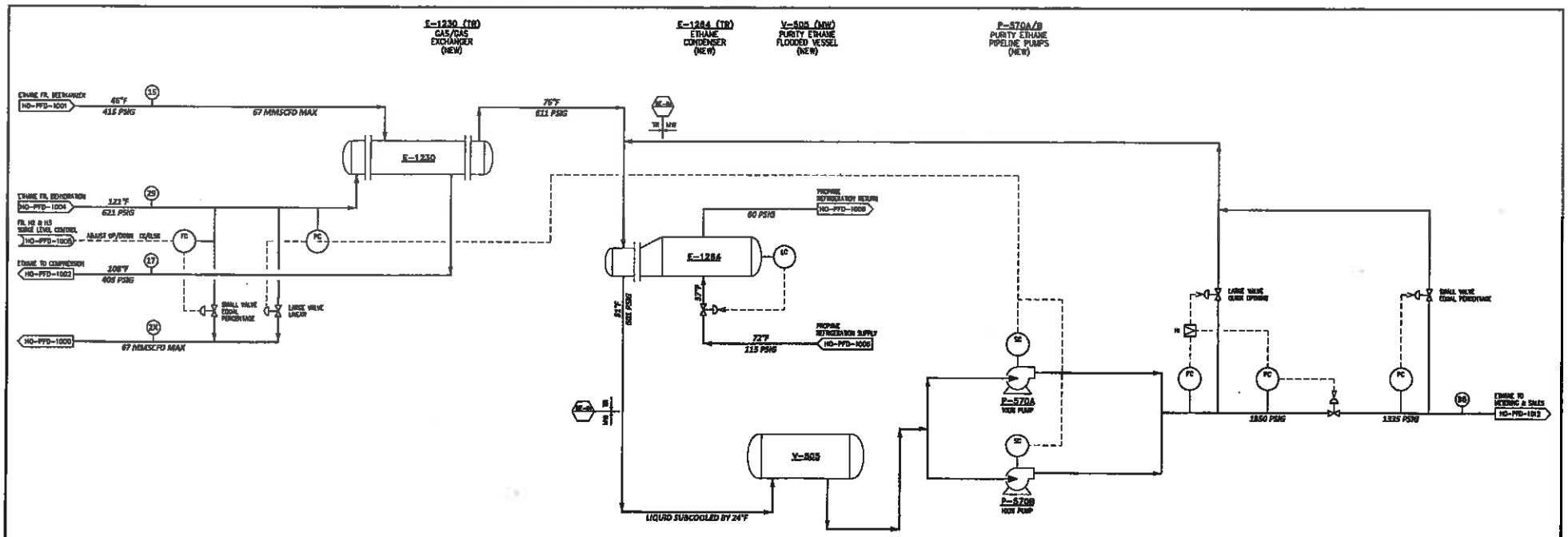

	Units		15 Cold Purity Ethane to Gas/Gas Exch	17 Ethane to Compression	29 Ethane from Dehydration	35 Purity Ethane to Pipeline
Temperature	°F		46	108	121	72
Pressure	psig		415	605	621	1825
Standard Gas Rate	MMSCFD		67.00	67.29	67.01	-
Standard Liquid Rate	BBL/day		-	-	-	42,360
Molar Flow Rate	lbmol/hr		7,388	7,388	7,388	7,388
Mass Flow Rate	lb/hr		220,148	220,148	220,044	219,844
Vapor Density	lb/ft3		3.79	3.63	4.39	-
Liquid Density	lb/ft3		23.8	-	-	24.5
Stream Components						
Methane	mole %		2.370	2.320	2.307	2.337
Ethane	mole %		97.3.9	97.309	97.632	97.632
Propane	mole %		0.040	0.040	0.040	0.040
i-Butane	mole %		0.000	0.000	0.000	0.000
n-Butane	mole %		0.000	0.000	0.000	0.000
i-Pentane	mole %		0.000	0.000	0.000	0.000
n-Pentane	mole %		0.000	0.000	0.000	0.000
n-Hexane	mole %		0.000	0.000	0.000	0.000
n-Heptane	mole %		0.000	0.000	0.000	0.000
n-Octane	mole %		0.000	0.000	0.000	0.000
CO2	mole %		0.13142	0.13142	0.00979	0.00979
Water	mole %		0.000	0.000	0.000	0.000
Nitrogen	mole %		0.000	0.000	0.019	0.000

(NRF) = NOT NORMALLY FLOWING

ISSUED FOR CONSTRUCTION
BY: RGM DATE: 2/15/13

REVISIONS NO.	REVISION DESCRIPTION	DATE	DRAWN	CHK'D	ENG. APP'D	PRODUCTION APP'D	CONSTR. APP'D
0	ISSUE FOR CONSTRUCTION	2/15/13	BR	RGM		JF	

MARKWEST
MarkWest Energy Partners, L.P.

PROCESS FLOW DIAGRAM
DEETHANIZER
ETHANE CONDENSATION & PIPELINE PUMPS
WASHINGTON Co. HOUSTON GAS PLANT PENNSYLVANIA

		DATE
APP'D	RGM	01/27/12
CHK'D	BMS	
ENG. APP'D	BMS	
PROCESS APP'D	BMS	
DESIGN APP'D	BMS	
SCALE: NONE	DWG. NO. HO-PFD-1006	REV. NO. 0

K:\Engineering Department\NEBU\Engineering\Houston DeEthanizer\Construction Drawings\PFD\HO-PFD-1005.dwg, 2/15/2013 1:43:15 PM, ryan.rosa

K:\Engineering Department\MEBU\Engineering\Houston DeEthanizer\Construction Drawings\PFD\HO-PFD-1006.dwg, 2/15/2013 1:43:45 PM, ryan.rose

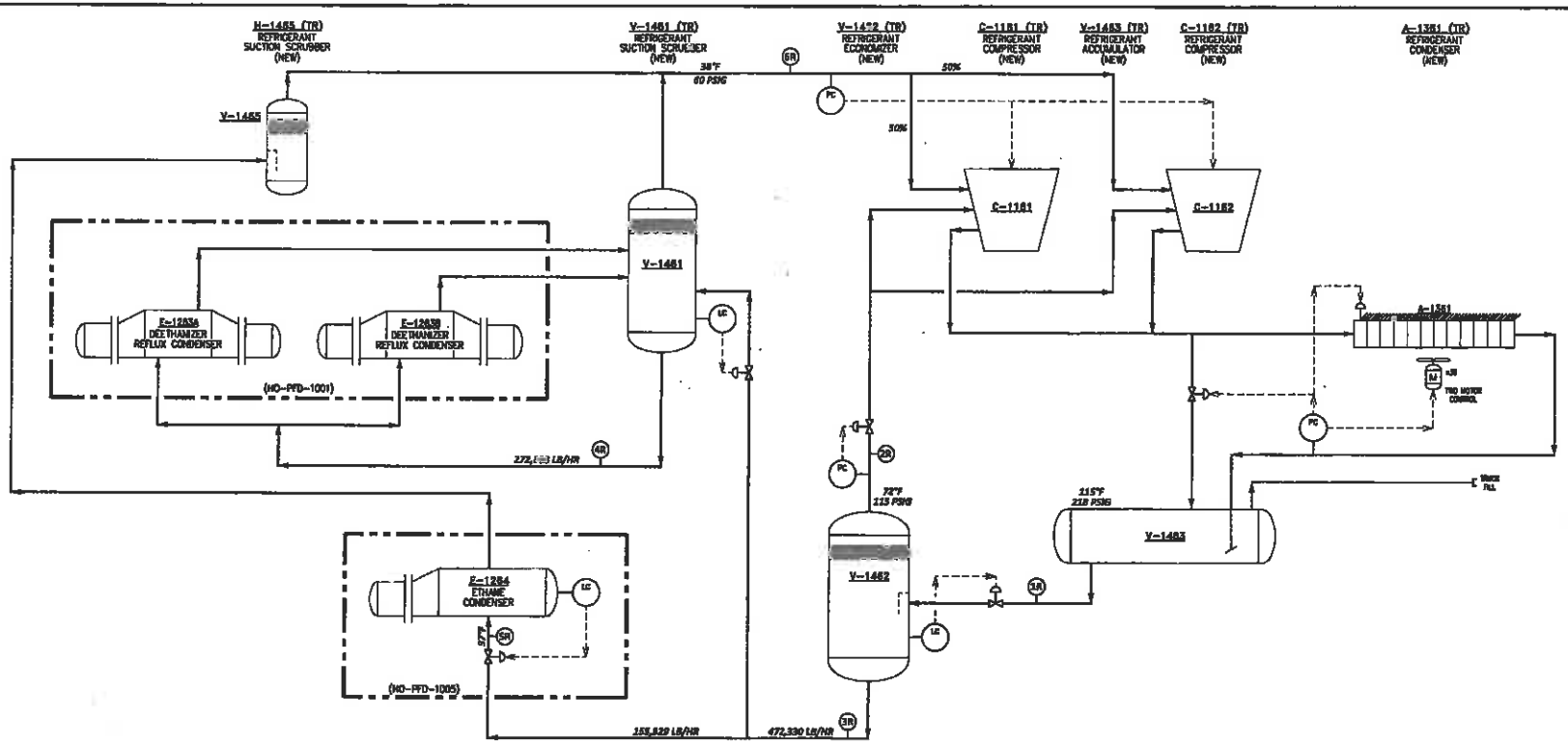

			1R	2R	3R	4R	5R	6,3
	Units		Refrig. frm. Refrigerant Accumulator	Refrig. Vapors to Compressor Interstage	Refrig Liquid frm. Refrigerant Economizer	Refrig Liquid to Reflux Condensers	Refrig L/V to Ethane Condenser	Refrig Vapors to Compr Section
Temperature	°F		115.0	72.2	72.2	37.6	37.5	37.9
Pressure	psig		218.0	115.0	115.0	69.3	69.3	69.3
Standard Gas Rate	MMSCFD		-	25.54	-	-	-	97.55
Standard Liquid Rate	BBL/day		-	-	-	-	-	-
Molar Flow Rate	lbmol/hr		13,494	3,886	30,453	6,288	8,618	10,630
Mass Flow Rate	lb/hr		565,618	222,490	472,390	272,693	155,829	472,390
Vapor Density	lb/ft3		-	1.28	-	-	0.76	0.76
Liquid Density	lb/ft3		28.5	-	31.0	32.8	32.8	-
Stream Components								
Methane	mole %		0.100	0.362	0.056	0.003	0.029	0.049
Ethane	mole %		0.800	1.497	0.346	0.136	0.948	0.467
Propane	mole %		98.900	98.139	98.150	98.159	98.388	98.752
I-Butane	mole %		0.200	0.127	0.234	0.248	0.234	0.454
n-Butane	mole %		0.340	0.117	0.899	0.854	0.399	0.247
I-Pentane	mole %		0.000	0.000	0.000	0.000	0.000	0.000
n-Pentane	mole %		0.000	0.000	0.000	0.000	0.000	0.000
n-Hexane	mole %		0.000	0.000	0.000	0.000	0.000	0.000
n-Heptane	mole %		0.000	0.000	0.000	0.000	0.000	0.000
n-Octane	mole %		0.000	0.000	0.000	0.000	0.000	0.000
CO2	mole %		0.000	0.000	0.000	0.000	0.000	0.000
Water	mole %		0.000	0.000	0.000	0.000	0.000	0.000
Nitrogen	mole %		0.000	0.000	0.013	0.000	0.002	0.079

ISSUED
FOR
CONSTRUCTION
BY: RGM DATE: 2/15/13

REFERENCE	NO.	REVISION DESCRIPTION	DATE	BY	CHK'D	ENG APP'D	PROCESS APP'D	DIRECTOR APP'D
	0	ISSUE FOR CONSTRUCTION	2/15/13	RM	RGM			

MARKWEST
MarkWest Energy Partners, L.P.

PROCESS FLOW DIAGRAM
DEETHANIZER
PROPANE REFRIGERATION
OPERATION Co. HOUSTON GAS PLANT PENNSYLVANIA

APP.		
DESIGN RGM	DATE	01/27/12
DET'D	DATE	
ENG APP'D	DATE	
PROCESS APP'D	DATE	
DIRECTOR APP'D	DATE	
SCALE NONE	DRAWING NO. HO-PFD-1006	REV. 0

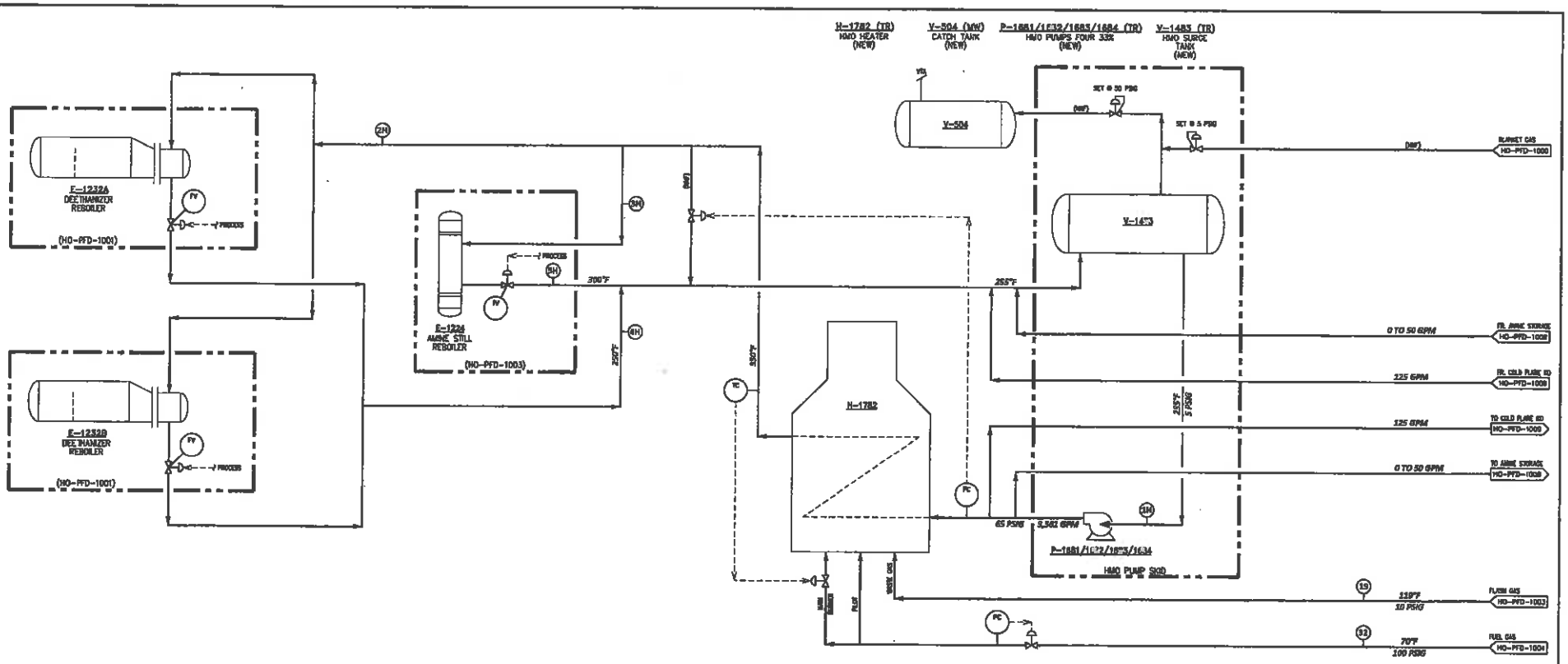

	Units		1H Heat Medium from HMO Surge Tank	2H Heat Medium to Deethanizer Reboilers	3H Heat Medium to Amine Still Reboilers	4H Heat Medium fm Deethanizer Reboilers	5H Heat Medium fm Amine Still Reboilers	19 Flash Gas to HMO Heater	32 Fuel Gas to HMO Heater
Temperature	°F		255.0	350.0	350.0	250.0	300.0	119	70.0
Pressure	psig		5.0	-	-	-	-	10	100.0
Standard Gas Rate	MMSCFD		-	-	-	-	-	-	2.76
Standard Liquid Rate	BBL/day		-	-	-	-	-	-	-
Molar Flow Rate	Tmol/hr		-	-	-	-	-	0.8	985
Mass Flow Rate	lb/hr		1,447,623	1,308,270	141,551	1,308,270	141,881	12.8	4,863
Vapor Density	lb/ft3		-	-	-	-	-	0.12	0.24
Liquid Density	lb/ft3		50.0	46.6	48.8	51.0	48.8		-
Stream Components									
Methane	mole %		-	-	-	-	-	3.300	97.924
Ethane	mole %		-	-	-	-	-	95.187	1.525
Propane	mole %		-	-	-	-	-	0.028	0.022
i-Butane	mole %		-	-	-	-	-	0.000	0.000
n-Butane	mole %		-	-	-	-	-	0.000	0.000
i-Pentane	mole %		-	-	-	-	-	0.000	0.000
n-Pentane	mole %		-	-	-	-	-	0.000	0.000
n-Hexane	mole %		-	-	-	-	-	0.000	0.000
n-Heptane	mole %		-	-	-	-	-	0.000	0.000
n-Octane	mole %		-	-	-	-	-	0.000	0.000
CO2	mole %		-	-	-	-	-	0.020	0.050
Water	mole %		-	-	-	-	-	1.5133	0.8000
Nitrogen	mole %		-	-	-	-	-	0.100	0.470

(NNF) = NOT NORMALLY FLOWING

ISSUED FOR CONSTRUCTION
BY: RGM DATE: 2/15/13

REFERENCE	NO.	REVISION-DESCRIPTION	DATE	DRAWN	CHK'D	DES. APP'D	PROCESS APP'D	CONSTR. APP'D
	0	ISSUE FOR CONSTRUCTION	2/15/13	RR	RGM		F	

MARKWEST
MarkWest Energy Partners, L.P.

PROCESS FLOW DIAGRAM
DEETHANIZER
HMO HEATER
HOUSTON GAS PLANT
WASHINGTON Co. PENNSYLVANIA

APP.	RGM	01/28/13
DRAWN		
CHK.		
PROCESS APP'D		
DES. APP'D		
DRAWING NO.	HO-PFD-1007	REV. 0

K:\Engineering Department\NEBU\Engineering\Houston DeEthanizer\Construction Drawings\PFD\HO-PFD-1007.dwg, 2/15/2013 1:44:07 PM, ryan.rzasa

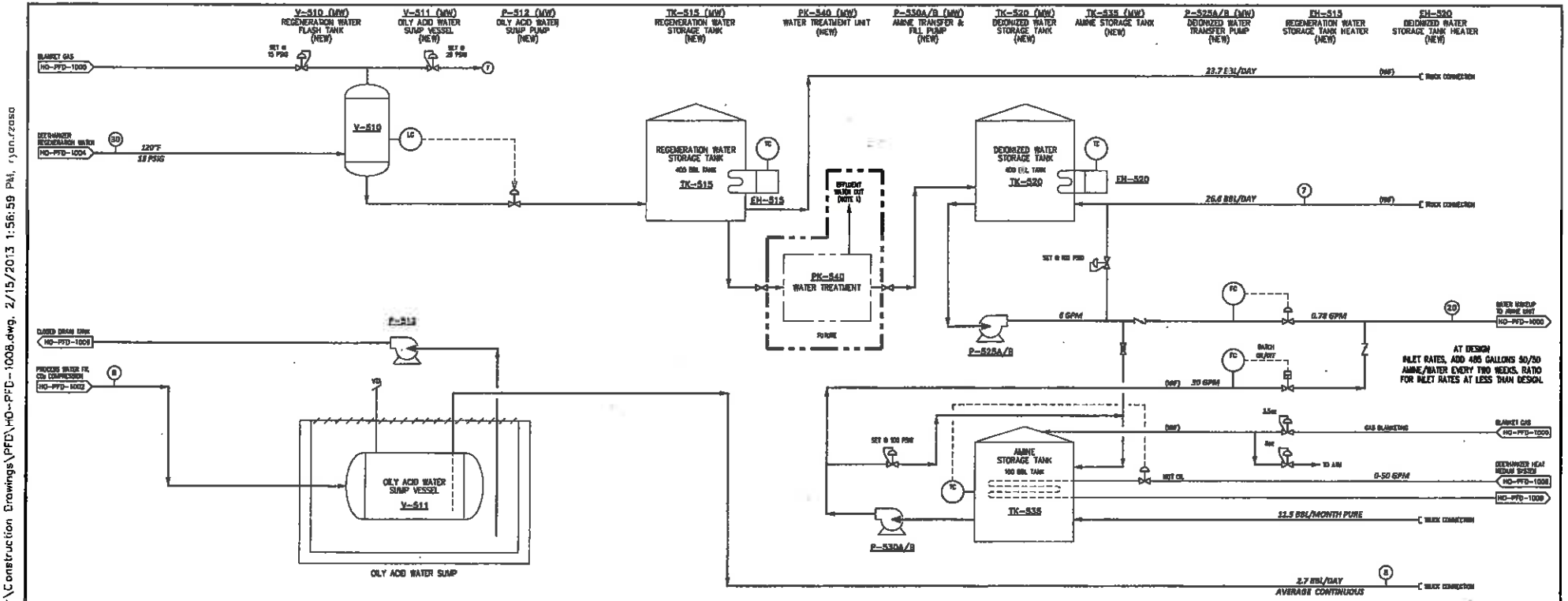

			7	8	20	30
	Units		Trucked-in Deionized Water	CO2 Process Water to Sump	Water Makeup to Amine Unit	Regen Water from Ethanol Dehy System
Temperature	°F		60.0	180.0	100.0	120.0
Pressure	psig		-	0	28	15
Standard Gas Rate	MMSCFD		-	-	-	-
Standard Liquid Rate	BBL/day		26.6	2.7	28.3	23.7
Molar Flow Rate	lbmol/hr		23.3	3.2	21.4	19.2
Mass Flow Rate	lb/hr		420	59	386	343
Vapor Density	lb/ft3		-	-	-	-
Liquid Density	lb/ft3		61.9	61.8	61.8	61.8
Stream Composition						
Methane	mole %		0.000	0.000	0.000	0.000
Ethane	mole %		0.000	0.000	0.000	0.000
Propane	mole %		0.000	0.000	0.000	0.000
i-Butane	mole %		0.000	0.000	0.000	0.000
n-Butane	mole %		0.000	0.000	0.000	0.000
i-Pentane	mole %		0.000	0.000	0.000	0.000
n-Pentane	mole %		0.000	0.000	0.000	0.000
n-Hexane	mole %		0.000	0.000	0.000	0.000
n-Heptane	mole %		0.000	0.000	0.000	0.000
n-Octane	mole %		0.000	0.000	0.000	0.000
CO2	mole %		0.001	0.249	0.000	0.001
Water	mole %		100.000	99.971	100.000	100.000
Nitrogen	mole %		0.000	0.000	0.000	0.000

ISSUED FOR CONSTRUCTION
BY: RGM DATE: 2/15/13

(INF) = NOT NORMALLY FLOWING

NOTES:
1. WATER TREATMENT IS EITHER RO UNIT OR RESIN BED UNIT. EFFLUENT WATER OUT IS ZERO FOR RESIN BED UNIT.

NO.	REVISION DESCRIPTION	DATE	DRAWN	CHK'D	ENG APP'D	PROCESS APP'D	MANAGER APP'D
0	ISSUE FOR CONSTRUCTION	2/15/13	rf	rgm		rf	

MARKWEST
MarkWest Energy Partners, L.P.

PROCESS FLOW DIAGRAM
DEETHANIZER
WATER & AMINE STORAGE
HOUSTON GAS PLANT
WASHINGTON Co. PENNSYLVANIA

APP. BY: RGM DATE: 01/27/12
DRAWN DATE:
CHK. BY(S) DATE:
PROJECT MGR. DATE:
ENGR MGR. DATE:
DRAWING NO. HO-PFD-1008
REVISION NO. 0

K:\Engineering Department\NEBU\Engineering\Houston DeEthanizer\Construction Drawings\PFD\HO-PFD-1008.dwg, 2/15/2013 1:56:59 PM, ryan.rzasa

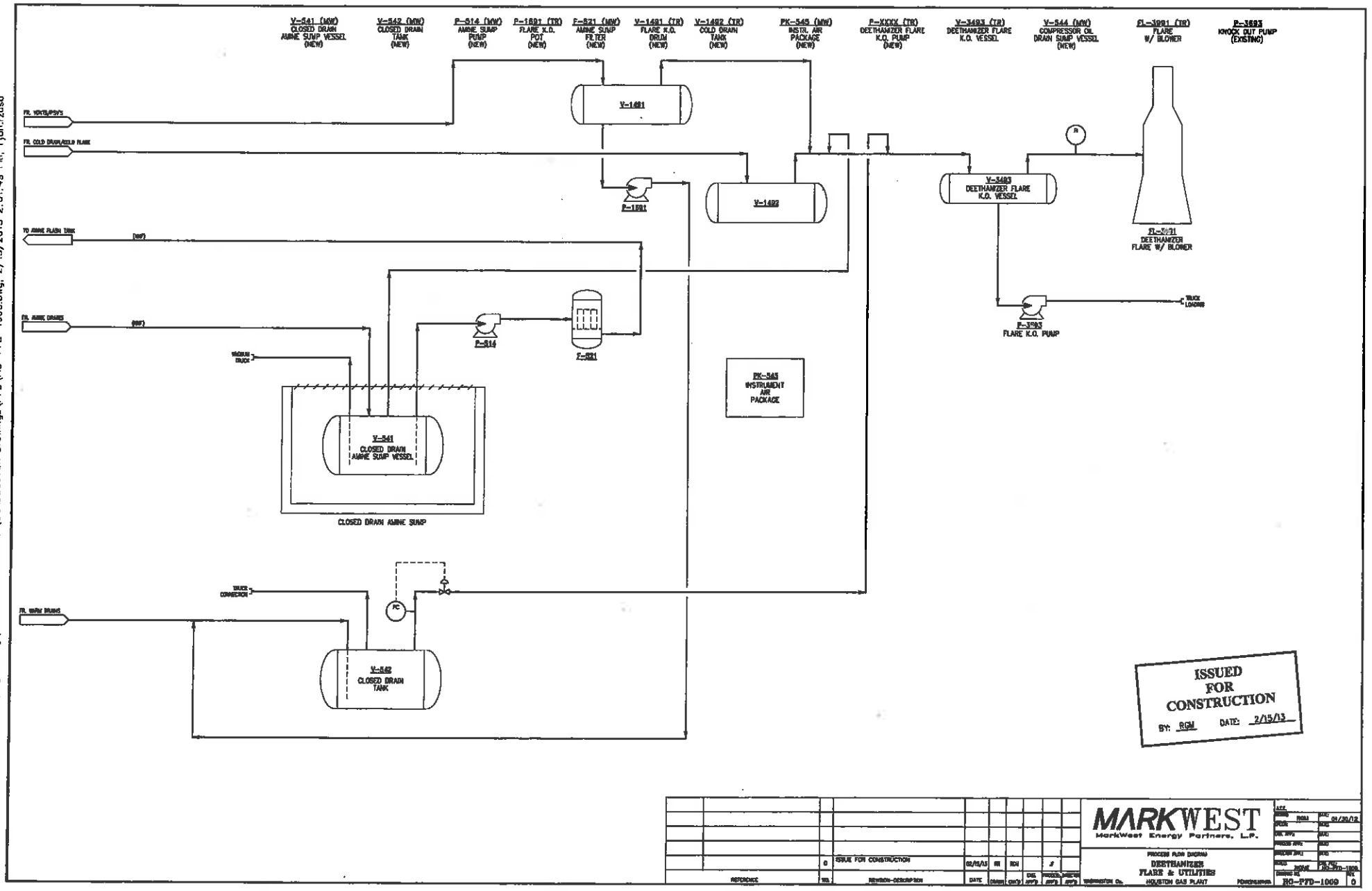

K:\Engineering Department\NEBU\Engineering\Houston DeEthanizer\Construction Drawings\PFD\HO-PFD-1009.dwg, 2/15/2013 2:01:49 PM, ryan.rzaso

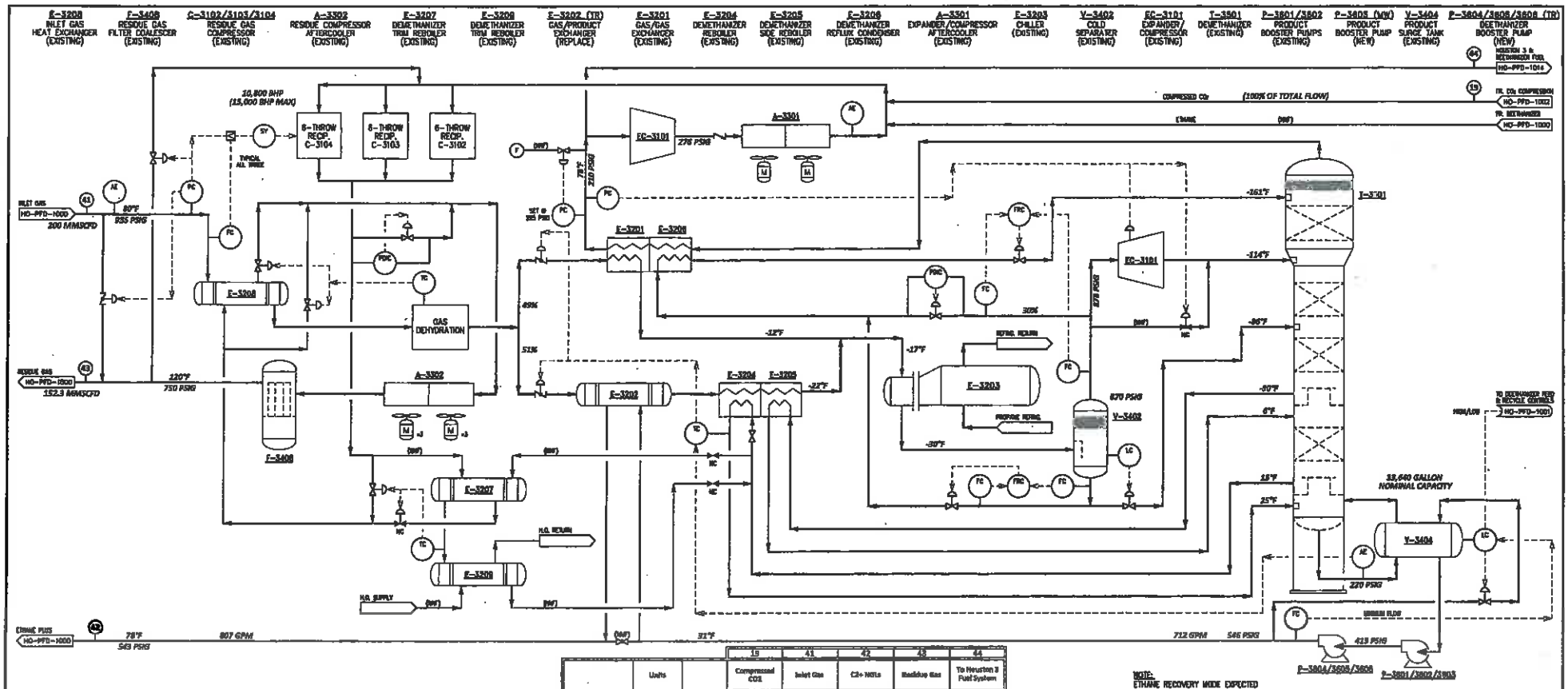

			19	41	42	43	44
	Units		Compressed CO2	Inlet Gas	C2+ NGLs	Residue Gas	To Houston 3 Fuel System
Temperature	°F		320	80	80	120	78
Pressure	psig		250	935	543	750	210
Standard Gas Rate	MMSCFD		0.23	200.0	-	152.3	5.48
Standard Liquid Rate	BBL/day		-		27845	-	-
Molar Flow Rate	lbmol/hr		28	21,881	4,888	16,722	602
Mass Flow Rate	lb/hr		1,083	455,488	172,828	273,844	8,826
Vapor Density	lb/ft3		2.90	4.59	-	2.15	0.66
Liquid Density	lb/ft3		-	-	26.8	-	-
Stream Components							
Methane	mole %		0.021	77.456	1.514	97.779	97.984
Ethane	mole %		0.687	14.769	65.895	1.824	1.525
Propane	mole %		0.000	4.850	23.777	0.023	0.012
i-Butane	mole %		0.000	0.530	2.497	0.000	0.000
n-Butane	mole %		0.000	1.170	5.513	0.000	0.000
i-Pentane	mole %		0.000	0.240	1.131	0.000	0.000
n-Pentane	mole %		0.000	0.280	1.320	0.000	0.000
n-Hexane	mole %		0.000	0.120	0.566	0.000	0.000
n-Heptane	mole %		0.000	0.070	0.877	0.000	0.000
n-Octane	mole %		0.000	0.040	0.188	0.000	0.000
CO2	mole %		98.705	0.080	0.162	0.234	0.058
Water	mole %		0.867	0.015	0.000	0.0009	0.000
Nitrogen	mole %		0.000	0.179	0.070	0.489	0.470

(NNF) = NOT NORMALLY FLOWING

ISSUED FOR CONSTRUCTION
BY: RGM DATE: 2/15/13

REFERENCE	NO.	REVISION-DESCRIPTION	DATE	DRAWN	CHK'D	DIR. APP'D	PROCESS APP'D	DIRECTOR APP'D
	0	ISSUE FOR CONSTRUCTION	2/15/13	RR	RGM		JF	

MARKWEST
MarkWest Energy Partners, L.P.

PROCESS FLOW DIAGRAM
HOUSTON 3
DEHY & CRYO
HOUSTON GAS PLANT
WASHINGTON Co. PENNSYLVANIA

DRAWN RGM DATE 02/16/13
DRAWING NO. HO-PFD-1010 REV. 0

K:\Engineering Department\NEEU\Engineering\Houston DeEthanizer\Construction Drawings\PFD\HO-PFD-1010.dwg, 2/15/2013 2:02:43 PM, ryan.rzasa

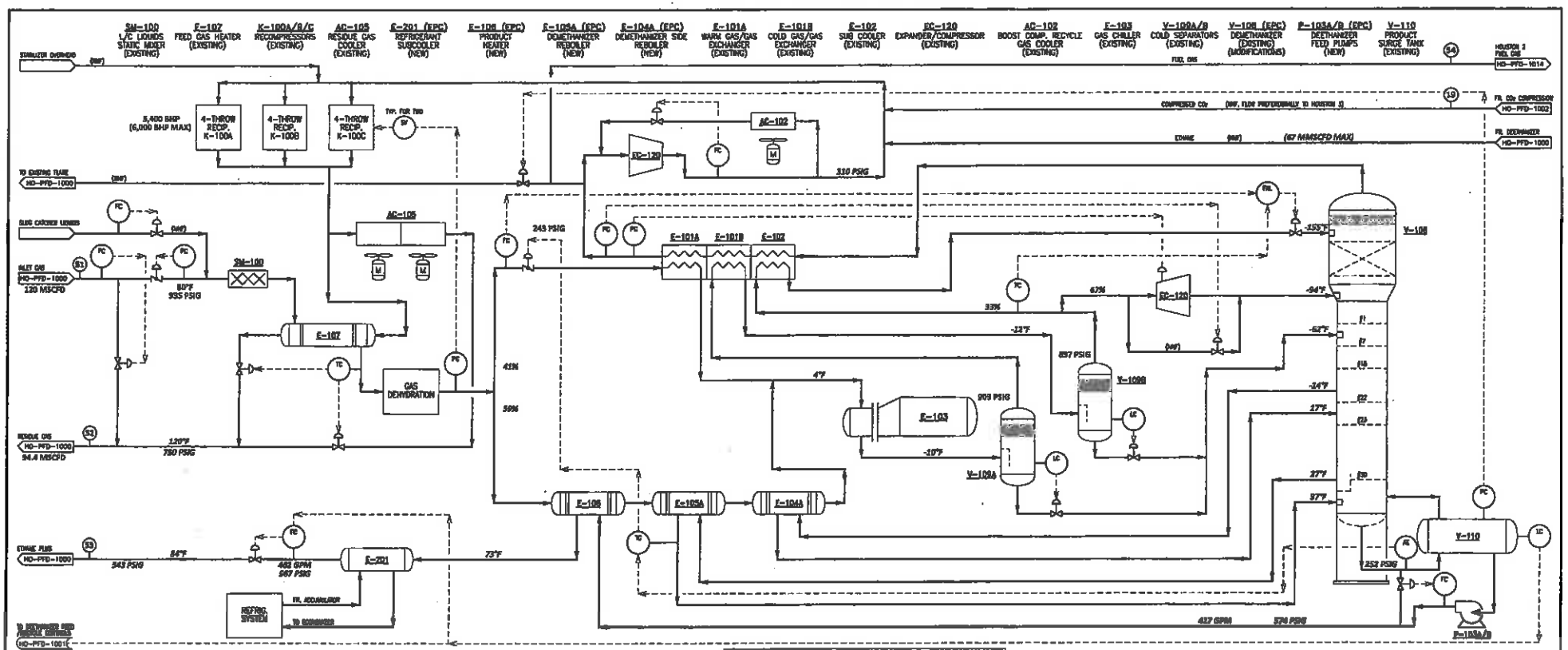

	Units		19 Compressed CO2	51 Inlet Gas	52 Residue Gas	53 C2+ NGLs	54 Houston 2 Fuel
Temperature	°F		120	80	120	54	73
Pressure	PSIG		152	935	750	543	248
Standard Gas Rate	MMSCFD		0.23	120.0	94.4	-	1.48
Standard Liquid Rate	BBL/day		-	-	-	15885	-
Molar Flow Rate	lbmol/hr		25	12,177	10,368	2,649	157
Mass Flow Rate	lb/hr		1,083	273,281	171,382	98,276	2,588
Vapor Density	lb/ft3		2.50	4.39	2.21	-	0.77
Liquid Density	lb/ft3		-	-	-	28.8	-
Stream Components							
Methane	mole %		0.021	77.456	98.890	1.472	86.940
Ethane	mole %		0.037	14.789	2.634	62.318	3.834
Propane	mole %		0.800	4.850	0.044	25.354	0.044
i-Butane	mole %		0.800	0.580	0.001	2.894	0.001
n-Butane	mole %		0.000	1.170	0.001	5.828	0.001
i-Pentane	mole %		0.000	0.240	0.000	1.194	0.000
n-Pentane	mole %		0.000	0.240	0.000	1.198	0.000
n-Hexane	mole %		0.000	0.120	0.000	0.597	0.000
n-Heptane	mole %		0.000	0.060	0.000	0.298	0.000
n-Octane	mole %		0.000	0.040	0.000	0.199	0.000
CO2	mole %		98.709	0.080	0.088	0.128	0.088
Water	mole %		0.022	0.015	0.0000	0.000	0.000
Nitrogen	mole %		0.023	0.370	0.483	0.000	0.443

(NNF) = NOT NORMALLY FLOWING

ISSUED FOR CONSTRUCTION
BY: RGM DATE: 2/15/13

REFERENCE	NO.	REVISION-DESCRIPTION	DATE	DRAWN	CHK'D	ENG. APP'D	PROCESS APP'D	APP'D
	0	ISSUE FOR CONSTRUCTION	2/15/13	RM	RGM			

MARKWEST
MarkWest Energy Partners, L.P.

PROCESS FLOW DIAGRAM
HOUSTON 2
DEHY & CRYO
HOUSTON GAS PLANT
BRENNINGTON Co. PENNSYLVANIA

A.F.E.
DRAWN RGM DATE 03/14/13
CHECKED
DWG. APP'D
PROCESS APP'D
ENGINEER APP'D
SCALE NONE
DWG. NO. HO-PFD-1011
REV. 0

K:\Engineering Department\NEBU\Engineering\Houston DeEthanizer\Construction Drawings\PFD\HO-PFD-1011.dwg, 2/15/2013 2:03:36 PM, rgarrzaso

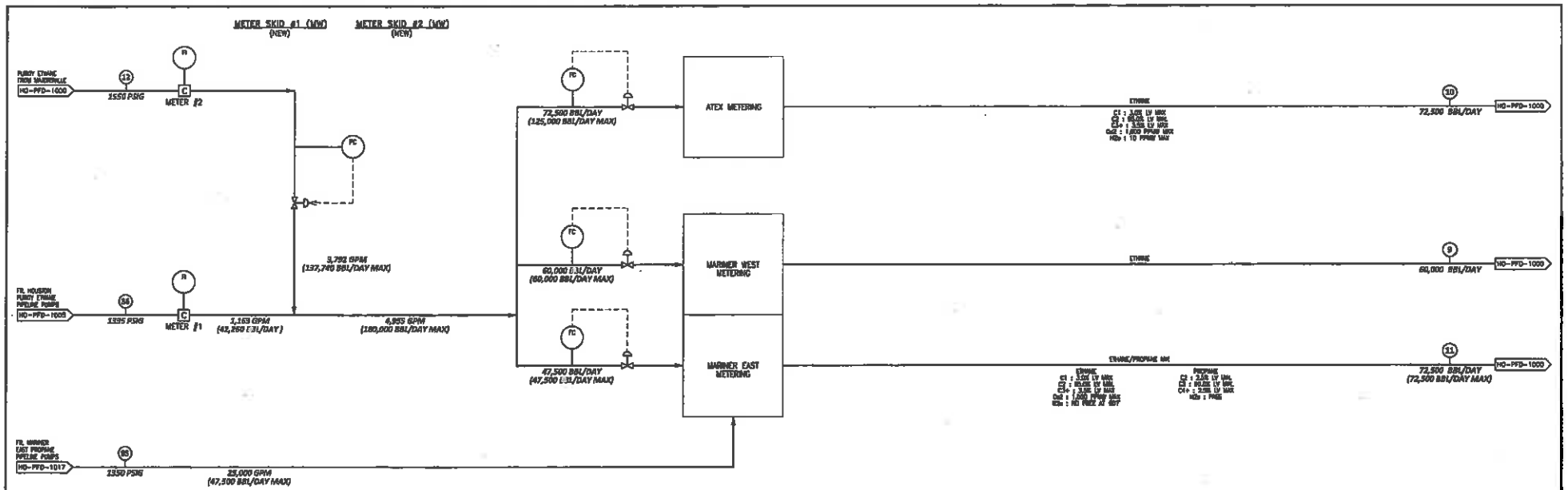

			9	10	11	12	36	95
	Units		Ethane to Mariner West	Ethane to ATEX	Ethane-Propane Mix to Mariner East	Ethane from Majorsville	Ethane from Houston	Mariner West Propane to Metering
Temperature	°F		71	72	72	72	72	72
Pressure	psig		1300	1800	1800	1550	1335	1350
Standard Gas Rate	MMSCFD		-	-	-	-	-	-
Standard Liquid Rate	BBL/day		60000	72500	72500	137740	42260	25000
Molar Flow Rate	lbmol/hr		18,454	12,632	12,487	28,898	7,363	4,163
Mass Flow Rate	lb/hr		310,985	375,784	0	728,537	219,046	184,464
Vapor Density	lb/ft3		-	-	-	-	-	-
Liquid Density	lb/ft3		29.6	23.6	27.0	23.3	31.4	31.9
Stream Components								
Methane	mole %		2.327	2.327	1.546	2.327	2.327	0.000
Ethane	mole %		97.632	97.632	85.371	97.632	97.632	2.104
Propane	mole %		0.040	0.040	32.130	0.040	0.040	95.658
i-Butane	mole %		0.000	0.000	0.032	0.000	0.000	1.882
n-Butane	mole %		0.000	0.000	0.121	0.000	0.000	0.319
i-Pentane	mole %		0.000	0.000	0.000	0.000	0.000	0.000
n-Pentane	mole %		0.000	0.000	0.000	0.000	0.000	0.000
n-Hexane	mole %		0.000	0.000	0.000	0.000	0.000	0.000
n-Heptane	mole %		0.000	0.000	0.000	0.000	0.000	0.000
n-Octane	mole %		0.000	0.000	0.000	0.000	0.000	0.000
CO2	mole %		0.00078	0.00078	0.00252	0.00078	0.00078	0.000
Water	mole %		0.000	0.000	0.000	0.000	0.000	0.000
Nitrogen	mole %		0.000	0.000	0.000	0.000	0.000	0.000

(NNF) = NOT NORMALLY FLOWING

ISSUED FOR CONSTRUCTION
BY: RGM DATE: 2/15/13

REFERENCE	NO.	REVISION-DESCRIPTION	DATE	DRAWN	CHK'D	ENG. APP'D	PROCESS APP'D	MECH. APP'D
	0	ISSUE FOR CONSTRUCTION	2/15/13	RR	RGM		J	

MARKWEST
MarkWest Energy Partners, L.P.

PROCESS FLOW DIAGRAM
ETHANE PIPELINE PUMPS & METERING
BLOCK FLOW
WASHINGTON Co. HOUSTON GAS PLANT PENNSYLVANIA

A.F.E.
DRAWN: RR DATE: 4/15/13
CHECK: DATE:
CHK. APP'D: DATE:
PROCESS APP'D: DATE:
SCALE: NONE CAD FILE: HO-PFD-1012
DRAWING NO. HO-PFD-1012 REV. 0

K:\Engineering Department\NEBU\Engineering\Houston DeEthanizer\Construction Drawings\PFD\HO-PFD-1012.dwg, 2/15/2013 2:03:58 PM, ryan.rzaso

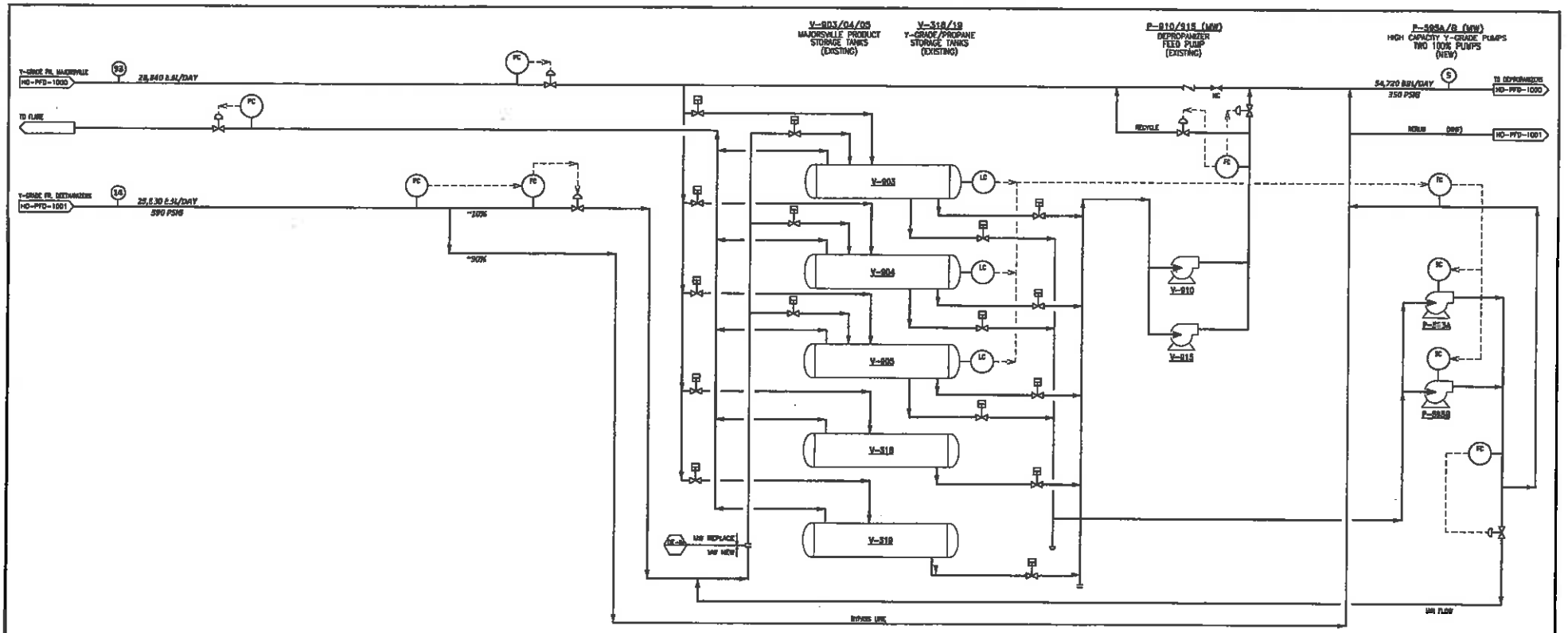

	Units		5 To Depropanizers #2 thru #5	14 C3+ from Deethanizer to Storage	93 Propane Plus from Majorsville
Temperature	°F		84	110	60
Pressure	psig		350	350	450
Standard Gas Rate	MMSCFD		-	-	-
Standard Liquid Rate	BBL/day		54717	25884	28837
Molar Flow Rate	lbmol/hr		8,807	4,924	4,489
Mass Flow Rate	lb/hr		412,802	204,900	227,835
Vapor Density	lb/ft3		-	-	-
Liquid Density	lb/ft3		32.7	32.0	34.8
Stream Components					
Methane	mole %		0.000	0.000	0.000
Ethane	mole %		1.201	1.201	1.501
Propane	mole %		65.325	65.357	65.308
n-Butane	mole %		7.630	7.630	7.630
n-Butane	mole %		15.705	15.705	15.705
n-Pentane	mole %		3.445	3.447	3.447
n-Pentane	mole %		3.658	3.658	3.658
n-Hexane	mole %		1.518	1.518	1.518
n-Heptane	mole %		1.051	1.051	1.051
n-Octane	mole %		0.585	0.584	0.584
CO2	mole %		0.000	0.000	0.000
Water	mole %		0.000	0.000	0.000
Nitrogen	mole %		0.000	0.000	0.000

(NNF) = NOT NORMALLY FLOWING

ISSUED FOR CONSTRUCTION
BY: RGM DATE: 2/15/13

REFERENCE	NO.	REVISION-DESCRIPTION	DATE	DRAWN	CHK'D	ENG. APP'D	PROCESS APP'D	DIRECTOR APP'D
	0	ISSUE FOR CONSTRUCTION	2/15/13	RR	RGM		JF	

MARKWEST
MarkWest Energy Partners, L.P.

PROCESS FLOW DIAGRAM
Y-GRADE STORAGE TANKS & PUMPS
BLOCK FLOW
SASHINGTON Co. HOUSTON GAS PLANT PENNSYLVANIA

DRAWN: RGM DATE: 03/15/12
CHECKED: DATE:
ENG. APP'D: DATE:
PROCESS APP'D: DATE:
DIRECTOR APP'D: DATE:
SCALE: NONE CAD. FILE: HO-PFD-1013
DRAWING NO. HO-PFD-1013 REV. 0

K:\Engineering Department\NEBU\Engineering\Houston DeEthanizer\Construction Drawings\PFD\HO-PFD-1013.dwg, 2/15/2013 2:08:21 PM, ryan.rzosa

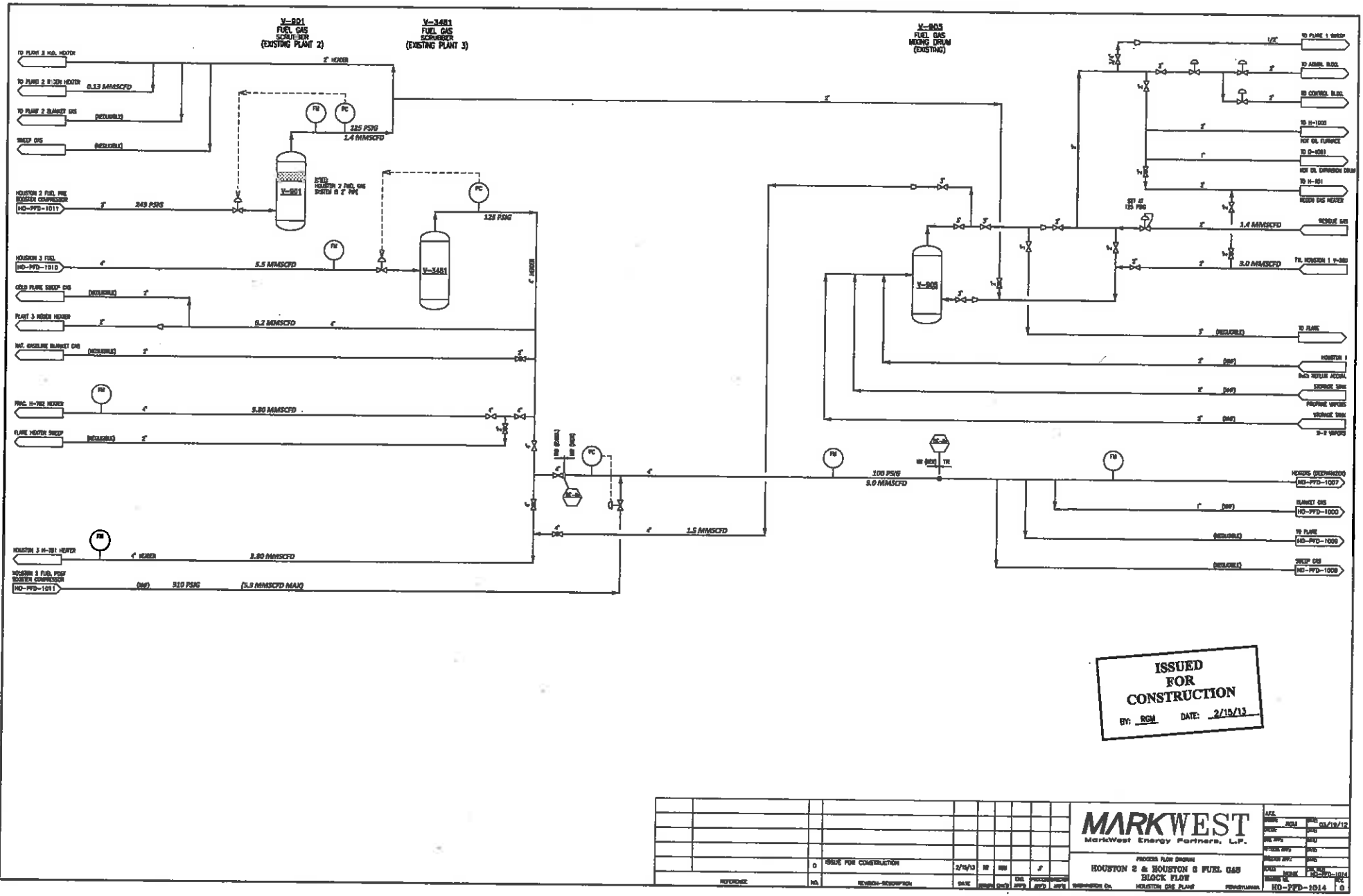

K:\Engineering Department\NEBU\Engineering\Houston DeEthanizer\Construction Drawings\PFD\HO-PFD-1014.dwg, 2/15/2013 2:08:40 PM, ryan.rzasa

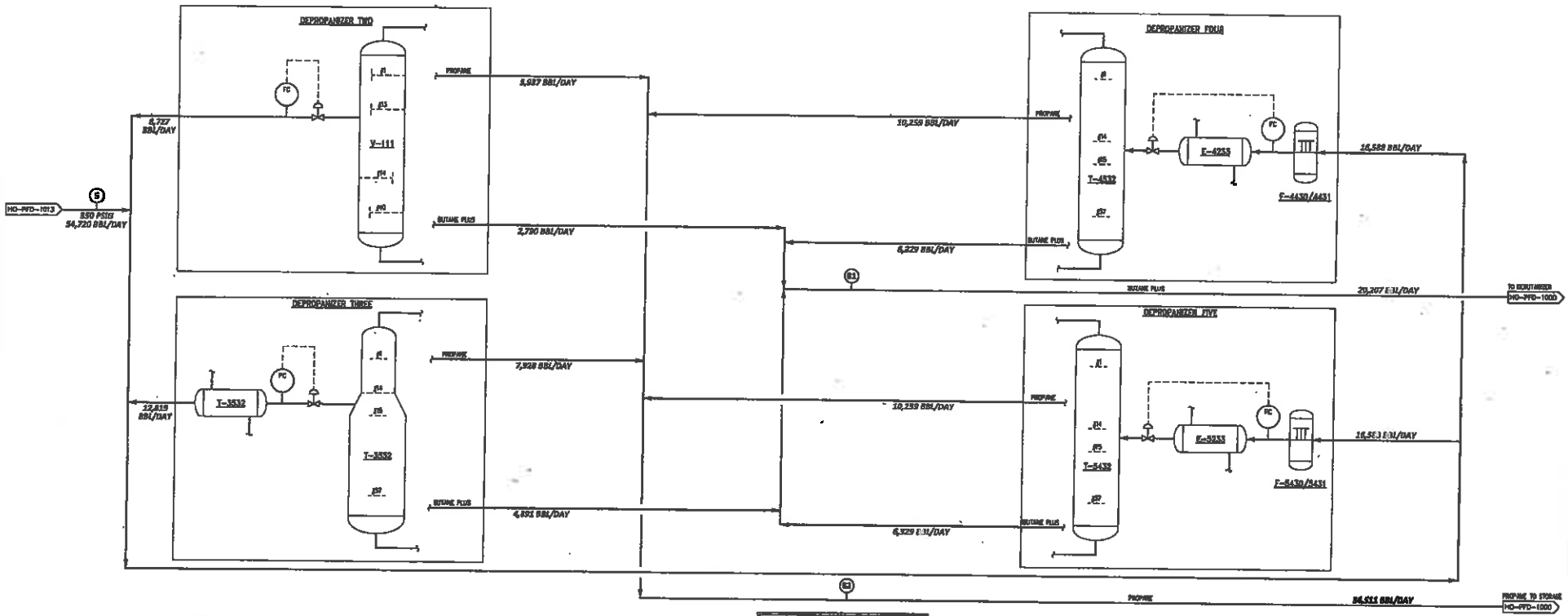

	Units		5 To Depropanizers #2 thru #5	81 Butane Plus to Debutanizer	82 Propane to Storage/Sales
Temperature	°F		84	80	80
Pressure	psig		350	255	87
Standard Gas Rate	MMSCFD		-	-	-
Standard Liquid Rate	BBL/day		54717	20287	54510
Molar Flow Rate	lbmol/hr		8,907	2,737	5,779
Mass Flow Rate	lb/hr		492,902	177,537	254,744
Vapor Density	lb/ft3		-	-	-
Liquid Density	lb/ft3		32.7	37.9	31.6
Stream Components					
Methane	mole %		0.000	0.000	0.000
Ethane	mole %		3.382	0.000	3.329
Propane	mole %		65.105	0.490	65.792
i-Butane	mole %		7.630	28.156	1.932
n-Butane	mole %		13.708	48.047	0.388
i-Pentane	mole %		3.446	10.717	0.000
n-Pentane	mole %		3.514	11.385	0.000
n-Hexane	mole %		1.538	4.720	0.000
n-Heptane	mole %		1.091	3.368	0.000
n-Octane	mole %		0.585	1.817	0.000
CO2	mole %		0.000	0.000	0.000
Water	mole %		0.000	0.000	0.000
Nitrogen	mole %		0.000	0.000	0.000

ISSUED FOR CONSTRUCTION
BY: RGM DATE: 2/15/13

NOTE: 1. ALL LIQUID FLOWS SHOWN ARE IN STANDARD IDEAL VOLUME FLOW. LIQUID FLOWS AT STANDARD CONDITIONS DO HAVE SLIGHTLY DIFFERENT VALUES.

REFERENCE	NO.	REVISION-DESCRIPTION	DATE	DRAWN	CHK'D	ENG APP'D	PROCESS APP'D	DIRECTOR APP'D
	0	ISSUE FOR CONSTRUCTION	2/15/13	RM	RGM		JF	

MARKWEST
MarkWest Energy Partners, L.P.

PROCESS FLOW DIAGRAM
DEPROPANIZER
HOUSTON GAS PLANT
EXPLORATION Co.

AFS		
DRAWN	F1	2/8/13
CHK'D		
PROCESS APP'D		
DIRECTOR APP'D		
SCALE	NONE	DWG. FILE HO-PFD-1016
DRAWING NO.	HO-PFD-1016	REV. 0

K:\Engineering Department\NEBU\Engineering\Houston DeEthanizer\Construction Drawings\PFD\HO-PFD-1016.dwg, 2/15/2013 2:09:09 PM, ryan.rzasa

PUBLISHER'S CERTIFICATE

I, Loretta Greathouse, Advertising Manager of THE EXPONENT TELEGRAM, a newspaper of general circulation published in the city of Clarksburg, County and state aforesaid, do hereby certify that the annexed:

AIR QUALITY PERMIT NOTICE

was published in THE EXPONENT-TELEGRAM 1 time(s) commencing on 01/15/2015 and ending on 01/15/2015 at the request of

MARKWEST ENERGY PARTNERS.

Given under my hand this 01/15/15.

The publisher's fee for said publication is: $49.80.

Loretta L Greathouse

Advertising Manager of The Exponent-Telegram

Subscribed to and sworn to before me this 01/15/15

Sarah Hurst

Notary Public in and for Harrison County, WV

My commission expires on

The 29th day of August 20 17

OFFICIAL SEAL
NOTARY PUBLIC
STATE OF WEST VIRGINIA
SARAH E. HURST
Clarksburg Publishing Company
P.O. Box 2000
Clarksburg, WV 26302
My commission expires August 29, 2017

AIR QUALITY PERMIT NOTICE
Notice of Application

Notice is given that MarkWest Liberty Midstream & Resources L.L.C. has applied to the West Virginia Department of Environmental Protection, Division of Air Quality, for modification to the Sherwood Gas Plant located in Doddridge County, West Virginia. The modification will allow for three additional processing trains with associated heaters and desthanization capability. From Smithburg Take US-50 East and go 2.8 miles. Turn right at Co. Route 50/35 and go 0.1 miles. Take the 1st right onto Blacklick Rd/Co Route 15/Sherwood-Greenbrier Rd and continue 0.4 miles. Site will be 0.5 miles west of Co Route 15. The latitude and longitude of the facility is: N 39° 16' 21" W80° 41' 08"

The applicant estimates the increases in potential to discharge for the following Regulated Air Pollutants will be:

Nitrogen Oxides (NOx)	29.60 tons/yr
Carbon Monoxide (CO)	34.31 tons/yr
Volatile Organic Compounds (VOC)	-10.33 tons/yr
Particulate Matter (PM)	7.73 tons/yr
Sulfur Dioxide (SO2)	0.45 tons/yr
Total HAPs	1.21 tons/yr

Startup of operation is planned to begin in summer 2015. Written comments will be received by the West Virginia Department of Environmental Protection, Division of Air Quality, 601 57th Street, SE, Charleston, WV 25304 for at least 30 calendar days from the date of publication of this notice. Any questions regarding this permit application should be directed to the DAQ at (304) 926-0499, extension 1227, during normal business hours.
Dated this the 22nd day of December, 2014.

By: MarkWest Liberty Midstream & Resources L.L.C.
Leanne Meyer
VP EH&S
1515 Arapahoe St.
Tower 1, Suite 1600
Denver, CO 80202-2137

Andrews, Edward S

From: Andrews, Edward S
Sent: Thursday, March 26, 2015 1:25 PM
To: 'Nathan Wheldon'
Subject: RE: MarkWest Sherwood Gas Plant

That is fine.

Ed

ID # 17-3U
Reg R13-29HC
Company MarkWest
Facility Sherwood Initials EXC

From: Nathan Wheldon [mailto:Nathan.Wheldon@markwest.com]
Sent: Thursday, March 26, 2015 12:51 PM
To: Andrews, Edward S
Cc: Dale Gable; Jarrett, James F
Subject: RE: MarkWest Sherwood Gas Plant

Ed, I have most of these answers but just need to verify one or two of the answers and then I can have it all back to you today or tomorrow.

From: Andrews, Edward S [mailto:Edward.S.Andrews@wv.gov]
Sent: Thursday, March 26, 2015 9:32 AM
To: Nathan Wheldon
Cc: Dale Gable; Jarrett, James F
Subject: MarkWest Sherwood Gas Plant

Nathan: I was seeing if you have seen the affidavit of publication. Last I spoke with it should have been published and forwarded to me. I am still waiting on it. If it has been sent in, could you e-mail me a scanned in copy.

The application did not include a process flow diagram. I would like to have a P&I diagram of the deethanization unit, stabilizers, and of the cryogenic units.

For Subpart OOOO LDAR compliance, are there any existing components being vented to the existing flare? If so, please identify the affected component. For the proposed new processing units, are any components being vented to the new flare as part of meeting the LDAR requirements of Subpart OOOO? If so, please identify them on the P&I diagrams.

Please identify the source of the fuel for the heaters (preprocessed pipeline gas, after extraction, process gas)? I need the total sulfur and H2S loading of the supply stream.

In the application for the flare, there are several cases listed in the September 25, 2014 proposal. Could you provide estimate of duration for these cases? Would there be a continuous purge vent or other waste stream going to the flare? I need the H2S loading of any waste stream being vent to the flare. The flare emission needs to include the emissions generated from combusting the waste gases vented to the flare.

Should you have any questions, please contact me.

Sincerely,

Entire Document
NON-CONFIDENTIAL

Edward S. Andrews, P.E.

Engineer
West Virginia Department of Environmental Protection
Division of Air Quality
601 57th Street, SE
Charleston, WV 25304
304.926.0499 ext. 1214

Andrews, Edward S

From: Andrews, Edward S
Sent: Thursday, January 22, 2015 11:21 AM
To: 'Nathan Wheldon'
Subject: RE: Sherwood Permit

Nathan: Thanks for the update. I will try to keep a look out for the affidavit.

Thanks,
Ed

Edward S. Andrews, P.E.
Engineer
West Virginia Department of Environmental Protection
Division of Air Quality
601 57th Street, SE
Charleston, WV 25304
304.926.0499 ext. 1214

ID # 17-34
Reg R13-2911C
Company Markwest
Facility Sherwood Initials EA

From: Nathan Wheldon [mailto:Nathan.Wheldon@markwest.com]
Sent: Thursday, January 22, 2015 11:11 AM
To: Andrews, Edward S
Subject: Sherwood Permit

Ed, I don't want you to think I have forgotten about our permit. I had to resend the newspaper notification because it somehow got lost but I have followed up by phone and it was published last Thursday. We are also discussing internally the applicability of NSPS Subpart Db and will be getting to you shortly on that topic. Luckily, with the downturn in gas prices I believe our construction schedule for the items in the permit have been delayed, I don't know the new schedule yet but I am OK with having the permit application on hold until we can resolve the Subpart Db issue. I'm sending this so you have a record that we are OK with that.

Nathan.

Entire Document
NON-CONFIDENTIAL

Andrews, Edward S

From: Nathan Wheldon <Nathan.Wheldon@markwest.com>
Sent: Tuesday, December 23, 2014 12:08 PM
To: Andrews, Edward S
Subject: RE: Sherwood Permit Clarification

Let me look into it further and I will get back to you.

From: Andrews, Edward S [mailto:Edward.S.Andrews@wv.gov]
Sent: Tuesday, December 23, 2014 8:26 AM
To: Nathan Wheldon
Subject: RE: Sherwood Permit Clarification

Nathan: We have been looking at this definition of "process heater" in 40 CFR 60.41b.

Process heater means a device that is primarily used to heat a material to initiate or promote a chemical reaction in which the material participates as a reactant or catalyst.

I need the chemical reaction that is taking place in the deethanizer that needs the heat energy from the heater to occur to classify the deethanizer as a process heater and exclude it from the NOx requirements of Subpart Db.

Sincerely,

Edward S. Andrews, P.E.
Engineer
West Virginia Department of Environmental Protection
Division of Air Quality
601 57th Street, SE
Charleston, WV 25304
304.926.0499 ext. 1214

ID # 17-3V
Reg R13-2914C
Company Mark West
Facility Sherwood Initials Ede

From: Nathan Wheldon [mailto:Nathan.Wheldon@markwest.com]
Sent: Monday, December 22, 2014 4:28 PM
To: Andrews, Edward S
Subject: Sherwood Permit Clarification

Entire Document
NON-CONFIDENTIAL

Ed, I'm still trying to find out if we have a simple PFD for the Deethanizer and Stabilizer of if I need to create one. I do have a reference to NSPS Subpart Db that exempts process heaters. Per Subpart Db as listed below the rule applies to steam generating units.

§60.40b Applicability and delegation of authority

(a) The affected facility to which this subpart applies is each steam generating unit that commences construction, modification, or reconstruction after June 19, 1984, and that has a heat input capacity from fuels combusted in the steam generating unit of greater than 29 megawatts (MW) (100 million British thermal units per hour (MMBtu/hr)).

The definition of steam generating unit then exempts process heaters as given below:

Steam generating unit means a device that combusts any fuel or byproduct/waste and produces steam or heats water or heats any heat transfer medium. This term includes any municipal-type solid waste incinerator with a heat recovery steam generating unit or any steam generating unit that combusts fuel and is part of a cogeneration system or a combined cycle system. **This term does not include process heaters** as they are defined in this subpart.

The heater for the deethanizer is used solely for the process at the deethanizer. The heat is used to accelerate the process of separation of the ethane from the remaining natural gas liquids.

Please let me know if there are any questions. I will provide the PFDs and newspaper affidavit when I have them

Nathan

Andrews, Edward S

From: Andrews, Edward S
Sent: Tuesday, December 23, 2014 10:26 AM
To: 'Nathan Wheldon'
Subject: RE: Sherwood Permit Clarification

Nathan: We have been looking at this definition of "process heater" in 40 CFR 60.41b.

Process heater means a device that is primarily used to heat a material to initiate or promote a chemical reaction in which the material participates as a reactant or catalyst.

I need the chemical reaction that is taking place in the deethanizer that needs the heat energy from the heater to occur to classify the deethanizer as a process heater and exclude it from the NOx requirements of Subpart Db.

Sincerely,

Edward S. Andrews, P.E.
Engineer
West Virginia Department of Environmental Protection
Division of Air Quality
601 57th Street, SE
Charleston, WV 25304
304.926.0499 ext. 1214

ID # 12-34
Reg R12-29/VC
Company Mark West
Facility Sherwood Initials [illegible]

Entire Document
NON-CONFIDENTIAL

From: Nathan Wheldon [mailto:Nathan.Wheldon@markwest.com]
Sent: Monday, December 22, 2014 4:28 PM
To: Andrews, Edward S
Subject: Sherwood Permit Clarification

Ed, I'm still trying to find out if we have a simple PFD for the Deethanizer and Stabilizer of if I need to create one. I do have a reference to NSPS Subpart Db that exempts process heaters. Per Subpart Db as listed below the rule applies to steam generating units.

> **§60.40b Applicability and delegation of authority**
> (a) The affected facility to which this subpart applies is each steam generating unit that commences construction, modification, or reconstruction after June 19, 1984, and that has a heat input capacity from fuels combusted in the steam generating unit of greater than 29 megawatts (MW) (100 million British thermal units per hour (MMBtu/hr)).

The definition of steam generating unit then exempts process heaters as given below:

> *Steam generating unit* means a device that combusts any fuel or byproduct/waste and produces steam or heats water or heats any heat transfer medium. This term includes any municipal-type solid waste incinerator with a heat recovery steam generating unit or any steam generating unit that combusts fuel and is part of a cogeneration system or a combined cycle system. **This term does not include process heaters** as they are defined in this subpart.

The heater for the deethanizer is used solely for the process at the deethanizer. The heat is used to accelerate the process of separation of the ethane from the remaining natural gas liquids.

Please let me know if there are any questions. I will provide the PFDs and newspaper affidavit when I have them

Nathan

Andrews, Edward S

From: Rice, Jennifer L
Sent: Monday, December 15, 2014 1:43 PM
To: lmeyer@markwest.com; nwheldon@markwest.com
Cc: Andrews, Edward S; McKeone, Beverly D
Subject: WV DAQ Permit Application Status for MarkWest Liberty Midstream & Resources; Sherwood Gas Plant

RE: Application Status
MarkWest Liberty Midstream & Resources
Sherwood Gas Plant
Plant ID No. 017-00034
Application No. R13-2914C

ID # _____
Reg _____
Company _____
Facility _____ Initials _____

Ms. Meyer,

Entire Document
NON-CONFIDENTIAL

Your application for a modification permit for the Sherwood Gas Plant was received by this Division on December 11, 2014, and was assigned to Ed Andrews. The following item(s) were not included in the initial application submittal:

Original affidavit for Class I legal advertisement not submitted.
Legal ad must be re-published to indicate that the permit application is for a Modification, rather than an Administrative Amendment II. Legal ad must also include the facility Latitude & Longitude. Also, the published start-up date on 2013 needs to be corrected.

This item is necessary for the assigned permit writer to continue the 30-day completeness review.

Within 30 days, you should receive a letter from Ed Andrews stating the status of the permit application and, if complete, given an estimated time frame for the agency's final action on the permit.

Any determination of completeness shall not relieve the permit applicant of the requirement to subsequently submit, in a timely manner, any additional or corrected information deemed necessary for a final permit decision.

Should you have any questions, please contact the assigned engineer, Ed Andrews, at 304-926-0499, extension 1214.

Jennifer Rice
WV Dept. of Environmental Protection
Division of Air Quality
304-926-0499 x1227
Jennifer.L.Rice@wv.gov