Ascent Resources - Marcellus, LLC

G70-A General Air Permit Application
Rush 404 Natural Gas Production Site

Wileyville, West Virginia

Prepared By:

ENVIRONMENTAL RESOURCES MANAGEMENT, Inc.
Hurricane, West Virginia

November 2015

ASCENT
RESOURCES

October 30, 2015

Mr. William F. Durham, Director
West Virginia Department of Environmental Protection
Division of Air Quality
601 57th Street, SE
Charleston, West Virginia, 25304

RE: G70-A Permit Application
Rush 404 Natural Gas Production Facility
Ascent Resources – Marcellus, LLC

Dear Director Durham:

Ascent Resources – Marcellus, LLC (Ascent) is pleased to submit the enclosed application for a General Permit G70-A for the Rush 404 facility near Wileyville in Wetzel County, West Virginia. The original and two copies of the complete application package are enclosed.

A check for the application fee in the amount of $500.00 made payable to the WVDEP – Division of Air Quality is also included with this package.

A public notice for the proposed project will be published in *The Wetzel Chronicle* as soon as possible. Ascent will forward the original Affidavit of Publication to your attention once it is received from the publisher.

If you have any questions about the information submitted or if you would like to discuss this project, please do not hesitate to contact me at (405) 608-5491.

Sincerely,

Evan Foster
EH&S Air Compliance Specialist

cc: Grant Morgan, ERM – Grant.morgan@erm.com

INTRODUCTION

Ascent Resources - Marcellus, LLC (Ascent) is submitting this G70-A Permit Application to the WVDEP's Division of Air Quality for the Rush 404 natural gas production site located in Wetzel County, West Virginia. This application addresses the operational activities associated with the production of natural gas and condensates at the Rush 404 pad.

FACILITY DESCRIPTION

The Ascent Rush 404 natural gas production site operates in Wetzel County, WV and consists of six (6) natural gas wells. Natural gas and liquids (including water and condensates) are extracted from underground deposits. The natural gas will be transported from the wells to a gas sales line for compression and additional processing, as necessary. The produced liquids and condensate fluids are stored in storage vessels, removed on an as-needed basis via tanker trucks.

The applicant seeks to authorize the operation of:

- Six (6) gas processing unit (GPU) burners each rated at 1.5 MMBtu/hr heat input;
- Two (2) condensate heaters each rated at 0.75 MMBtu/hr heat input;
- Eight (8) 210 barrel (bbl) produced water tanks;
- Two (2) 178 barrel (bbl) condensate tanks;
- One (1) Hero Flare G30U4 Enclosed Combustion Device with a capacity of 20.83 MMBtu/hr;
- One (1) Produced Water Tank Truck Loading Operation; and
- One (1) Condensate Tank Truck Loading Operation;

A process flow diagram is included in this application in Attachment D.

STATEMENT OF AGGREGATION

The Rush 404 facility is located in Wetzel County, WV and operated by Ascent. Stationary sources of air pollutants may require aggregation of total emission levels to evaluate the potential applicability of Title I, Parts C and D preconstruction permitting programs and the Title V operating permit program if these sources share the same industrial grouping, are operating under common control, and are classified as contiguous or adjacent facilities. Ascent operates the Rush 404 facility with the same industrial grouping as nearby facilities, and some of these facilities are under common control. Ascent is not subject to the aggregation of stationary emission sources because these sites do not meet the definition of contiguous or adjacent facilities.

The Rush 404 facility will operate under SIC code 1311 (Crude Petroleum and Natural Gas Extraction). There are surrounding wells and compressor stations operated by Ascent that share the same two-digit major SIC code of 13 for Crude Petroleum and Natural Gas Extraction. Therefore, the Rush 404 Facility does share the same SIC codes as the surrounding wells and compressor stations.

Ascent is the sole operator of the Rush 404 pad. Ascent is also the sole operator of other production sites and compressor stations in the area. Therefore, Ascent does qualify as having nearby operations under common control.

Nearby sites do not meet the definition of contiguous or adjacent properties since they are not in contact and do not share common boundaries. These surrounding facilities are located outside the ¼ mile radius which excludes the Rush 404 from aggregation of emissions.

Based on the above reasoning, Ascent is not subject to the aggregation of stationary emission sources since the stationary sources are not considered contiguous or adjacent facilities.

REGULATORY DISCUSSION

This section outlines the State air quality regulations that could be reasonably expected to apply to the Rush 404 facility and makes an applicability determination for each regulation based on activities conducted at the site and the emissions of regulated air pollutants. This review is presented to supplement and/or add clarification to the information provided in the WVDEP G70-A permit application forms.

The West Virginia State Regulations address applicable state (i.e. State Implementation Plan) rules as well as federal regulations, including Prevention of Significant Deterioration or Nonattainment New Source Review Preconstruction Permitting, Title V, New Source Performance Standards, and National Emission Standards for Hazardous Air Pollutants. The regulatory requirements in reference to Rush 404 are described in detail in the below section.

WEST VIRGINIA STATE AIR REGULATIONS

45 CSR 02 – To Prevent and Control Particulate Air Pollution from Combustion of Fuel in Indirect Heat Exchangers

The line heaters are indirect heat exchangers that combust natural gas. Such units are subject to 10% opacity as a six-minute block average limitation, but are

exempt from most other requirements in the rule aside from discretionary testing requirements.

45 CSR 04 – To Prevent and Control the Discharge of Air Pollutants into the Air Which Causes or Contributes to an Objectionable Odor

Operations conducted at the Rush 404 facility are subject to this requirement. Based on the nature of the process at the wellpad, the presence of objectionable odors is unlikely.

45 CSR 06 – Control of Air Pollution from the Combustion of Refuse

The enclosed combustion device located on the Rush 404 natural gas production site is subject to this regulation. Per 45 CSR 6-4.3, opacity of emissions from the enclosed combustion device shall not exceed 20 percent, except as provided by 4.4. Particulate matter emissions from this unit will not exceed the levels calculated in accordance with 6-4.1.

45 CSR 10 – To Prevent and Control Air Pollution from the Emission of Sulfur Oxides

The line heaters are indirect heat exchangers that combust natural gas. Such units are subject to the 2,000 ppm_v sulfur dioxide concentration limitation but are exempt from most other requirements in the rule aside from discretionary testing requirements. Compliance with the allowable sulfur dioxide concentration limitations is based on a block (3) hour averaging time.

45 CSR 13 – Permits for Construction, Modification, Relocation, and Operation of Stationary Sources of Air Pollutants

This G70-A permit application is being submitted for the operational activities associated with Ascent's production of natural gas.

45 CSR 14 / 45 CSR 19 – Permits for Construction and Major Modification of Major Stationary Sources of Air Pollution for the Prevention of Significant Deterioration / Permits for Construction and Major Modification of Major Stationary Sources of Air Pollution which Cause or Contributed to Non-attainment

Federal construction permitting programs regulate new and modified sources of attainment pollutants. The G70-A applicability criteria exclude facilities that meet the definition of a major source, as defined in 45 CSR 19, from being eligible for the general permit.

Operation of equipment at the Rush 404 facility will not exceed major source emission thresholds established by these permitting programs. Ascent will monitor future construction and modification activities at the site closely and

will compare any future increase in emissions with major source thresholds to ensure these activities will not trigger either program.

45 CSR 16 - Standards of Performance for New Stationary Sources (NSPS)

45 CSR 16 applies to all registrants that are subject to any of the NSPS requirements described in more detail in the Federal Regulations section. Applicable requirements of NSPS, Subpart OOOO are not required in the G70-A general permit.

45 CSR 30 – Requirements for Operating Permits

45 CSR 30 applies to the requirements of the federal Title V operating permit program (40 CFR 70). The major source thresholds with respect to the West Virginia Title V operating permit program regulations are 10 tons per year (tpy) of a single HAP, 25 tpy of any combination of HAP, and 100 tpy of all other regulated pollutants.

The potential emissions of all regulated pollutants are below the corresponding threshold(s) at this facility. The facility is not major source with respect to the Title V operating permit program.

45 CSR 34 – National Emission Standards for Hazardous Air Pollutants (NESHAP)

45 CSR 34 applies to all registrants that are subject to any of the NESHAP requirements described in more detail in the Federal Regulations section. Applicable requirements of NESHAPS, Subpart HH are not required in the G70-A general permit.

FEDERAL REGULATIONS

40 CFR 60, Subpart OOOO (Standards of Performance for Crude oil and Natural Gas Production, Transmission and Distribution)

Subpart OOOO establishes emission standards and compliance schedules for the control of volatile organic compounds (VOC) and sulfur dioxide (SO_2) emissions from affected facilities that commence construction, modification or reconstruction after August 23, 2011. The applicable provisions and requirements of Subpart OOOO are included under the G70-A permit.

This facility includes gas well affected facilities under Subpart OOOO.

There are several equipment types that will be installed at Rush 404 that do not meet the affected facility definitions as specified by EPA. These include pneumatic controllers and storage vessels.

> Pneumatic Controllers: Any pneumatic controller installed at this facility will intermittent bleed devices. Therefore, there will not be any pneumatic controller affected facilities located at this site.
>
> Storage vessels: Based on PTE calculations included within this permit, emissions from each storage vessel are routed to an enclosed combustion device such that the total tank emissions for the entire facility are below 6 tons per year (tpy) of VOC. The operation of the enclosed combustion device will be a legally and practically enforceable permit condition. For this reason, the Rush 404 facility does not meet the definition of Storage Vessel Affected Facility under 40 CFR Part 60 Subpart OOOO.

No additional NSPS are currently applicable to this facility.

The following NESHAP included in the G70-A permit are not applicable to the Rush 404 facility:

- 40 CFR 63 Subpart HH (National Emission Standards for Hazardous Air Pollutants from Oil and Natural Gas Production Facilities).

WEST VIRGINIA
DEPARTMENT OF ENVIRONMENTAL PROTECTION
DIVISION OF AIR QUALITY
601 57th Street, SE
Charleston, WV 25304
Phone: (304) 926-0475 • *www.dep.wv.gov/daq*

APPLICATION FOR GENERAL PERMIT REGISTRATION

CONSTRUCT, MODIFY, RELOCATE OR ADMINISTRATIVELY UPDATE
A STATIONARY SOURCE OF AIR POLLUTANTS

☐ CONSTRUCTION ☒ MODIFICATION ☐ RELOCATION ☐ CLASS I ADMINISTRATIVE UPDATE
☐ CLASS II ADMINISTRATIVE UPDATE

CHECK WHICH TYPE OF GENERAL PERMIT REGISTRATION YOU ARE APPLYING FOR:

- ☐ **G10-D –** Coal Preparation and Handling
- ☐ **G20-B –** Hot Mix Asphalt
- ☐ **G30-D –** Natural Gas Compressor Stations
- ☐ **G33-A –** Spark Ignition Internal Combustion Engines
- ☐ **G35-A –** Natural Gas Compressor Stations (Flare/Glycol Dehydration Unit)
- ☐ **G40-C –** Nonmetallic Minerals Processing
- ☐ **G50-B –** Concrete Batch
- ☐ **G60-C** - Class II Emergency Generator
- ☐ **G65-C –** Class I Emergency Generator
- ☒ **G70-A –** Class II Oil and Natural Gas Production Facility

SECTION I. GENERAL INFORMATION

1. Name of applicant (as registered with the WV Secretary of State's Office):
Ascent Resources - Marcellus, LLC

2. Federal Employer ID No. **(FEIN):**
25-0724685

3. Applicant's mailing address:
301 NW 63rd Street
Oklahoma City, OK 73116

4. Applicant's physical address:
Hoyt Ridge Road, Wileyville, WV

5. If applicant is a subsidiary corporation, please provide the name of parent corporation: **N/A**

6. **WV BUSINESS REGISTRATION.** Is the applicant a resident of the State of West Virginia? ☐ **YES** ☒ **NO**
- IF **YES,** provide a copy of the Certificate of **Incorporation/ Organization / Limited Partnership** (one page) including any name change amendments or other Business Registration Certificate as **Attachment A**.
- IF **NO,** provide a copy of the **Certificate of Authority / Authority of LLC / Registration** (one page) including any name change amendments or other Business Certificate as **Attachment A**.

SECTION II. FACILITY INFORMATION

7. Type of plant or facility (stationary source) to be constructed, modified, relocated or administratively updated (e.g., coal preparation plant, primary crusher, etc.):
Class II Oil and Natural Gas Production Facility

8a. Standard Industrial Classification AND 8b. North American Industry
Classification (SIC) code: **1311** System (NAICS) code: **211111**

9. DAQ Plant ID No. (for existing facilities only):
103-00050

10. List all current 45CSR13 and other General Permit numbers associated with this process (for existing facilities only):
R13-2985B

A: PRIMARY OPERATING SITE INFORMATION

11A. Facility name of primary operating site: **Rush 404 Natural Gas Production Facility**	12A. Address of primary operating site: Mailing: **301 NW 63rd, Street, Oklahoma City, OK 73116** Physical: **Hoyt Ridge Road, Wileyville, WV**

13A**.** Does the applicant own, lease, have an option to buy, or otherwise have control of the proposed site? ☒ **YES** ☐ **NO**

- IF **YES**, please explain: **The applicant leases the proposed site.**
- IF **NO**, YOU ARE NOT ELIGIBLE FOR A PERMIT FOR THIS SOURCE.

14A. ☐ For **Modifications or Administrative Updates** at an existing facility, please provide directions to the present location of the facility from the nearest state road;

– For Construction or Relocation permits, please provide directions to the proposed new site location from the nearest state road. Include a **MAP** as **Attachment F**.

From Route 7 East out of New Martinsville towards Morgantown for 17 miles. Turn right onto Barker Run Road and continue for 1.2 miles, before taking a left onto Hoyt Ridge Road. Follow Hoyt Ridge Road for 3.0 miles. Access road to Hoyt 404 will be present on left side.

15A. Nearest city or town: **Wileyville**	16A. County: **Wetzel**	17A. UTM Coordinates: Northing (KM): **531.112** Easting (KM): **4,384.674** Zone: **17S**

18A. Briefly describe the proposed new operation or change (s) to the facility: **The Rush 404 natural gas production site will remove the existing vapor recovery unit (VRU) and increase the flare operating hours from 450 to 8,760 hours. Fluid throughputs will also be updated based upon actual production records.**	19A. Latitude & Longitude Coordinates (NAD83, Decimal Degrees to 5 digits): Latitude: **39.61125** Longitude: **-80.63736**

SECTION III. ATTACHMENTS AND SUPPORTING DOCUMENTS

23. Include a check payable to WVDEP – Division of Air Quality with the appropriate **application fee** (per 45CSR22 and 45CSR13).

24. Include a **Table of Contents** as the first page of your application package.

All of the required forms and additional information can be found under the Permitting Section (General Permits) of DAQ's website, or requested by phone.

25. Please check all attachments included with this permit application. Please refer to the appropriate reference document for an explanation of the attachments listed below.

- ☒ ATTACHMENT A : CURRENT BUSINESS CERTIFICATE
- ☒ ATTACHMENT B: PROCESS DESCRIPTION
- ☒ ATTACHMENT C: DESCRIPTION OF FUGITIVE EMISSIONS
- ☒ ATTACHMENT D: PROCESS FLOW DIAGRAM
- ☒ ATTACHMENT E: PLOT PLAN
- ☒ ATTACHMENT F: AREA MAP
- ☒ ATTACHMENT G: EQUIPMENT DATA SHEETS AND REGISTRATION SECTION APPLICABILITY FORM
- ☒ ATTACHMENT H: AIR POLLUTION CONTROL DEVICE SHEETS
- ☒ ATTACHMENT I: EMISSIONS CALCULATIONS
- ☒ ATTACHMENT J: CLASS I LEGAL ADVERTISEMENT
- ☐ ATTACHMENT K: ELECTRONIC SUBMITTAL **(NOT APPLICABLE)**
- ☒ ATTACHMENT L: GENERAL PERMIT REGISTRATION APPLICATION FEE
- ☐ ATTACHMENT M: SITING CRITERIA WAIVER **(NOT APPLICABLE)**
- ☐ ATTACHMENT N: MATERIAL SAFETY DATA SHEETS (MSDS) **(NOT APPLICABLE)**
- ☒ ATTACHMENT O: EMISSIONS SUMMARY SHEETS
- ☐ OTHER SUPPORTING DOCUMENTATION NOT DESCRIBED ABOVE (Equipment Drawings, Aggregation Discussion, etc.) **(NOT APPLICABLE)**

Please mail an original and two copies of the complete General Permit Registration Application with the signature(s) to the DAQ Permitting Section, at the address shown on the front page of this application. Please DO NOT fax permit applications. For questions regarding applications or West Virginia Air Pollution Rules and Regulations, please refer to the website shown on the front page of the application or call the phone number also provided on the front page of the application.

SECTION IV. CERTIFICATION OF INFORMATION

This General Permit Registration Application shall be signed below by a Responsible Official. A Responsible Official is a President, Vice President, Secretary, Treasurer, General Partner, General Manager, a member of a Board of Directors, or Owner, depending on business structure. A business may certify an Authorized Representative who shall have authority to bind the Corporation, Partnership, Limited Liability Company, Association, Joint Venture or Sole Proprietorship. Required records of daily throughput, hours of operation and maintenance, general correspondence, Emission Inventory, Certified Emission Statement, compliance certifications and all required notifications must be signed by a Responsible Official or an Authorized Representative. If a business wishes to certify an Authorized Representative, the official agreement below shall be checked off and the appropriate names and signatures entered. Any administratively incomplete or improperly signed or unsigned Registration Application will be returned to the applicant.

FOR A CORPORATION (domestic or foreign)

☐ I certify that I am a President, Vice President, Secretary, Treasurer or in charge of a principal business function of the corporation

FOR A PARTNERSHIP

☐ I certify that I am a General Partner

FOR A LIMITED LIABILITY COMPANY

☒ I certify that I am a General Partner or General Manager

FOR AN ASSOCIATION

☐ I certify that I am the President or a member of the Board of Directors

FOR A JOINT VENTURE

☐ I certify that I am the President, General Partner or General Manager

FOR A SOLE PROPRIETORSHIP

☐ I certify that I am the Owner and Proprietor

☐ *I hereby certify that* (please print or type) _____

is an Authorized Representative and in that capacity shall represent the interest of the business (e.g., Corporation, Partnership, Limited Liability Company, Association Joint Venture or Sole Proprietorship) and may obligate and legally bind the business. If the business changes its Authorized Representative, a Responsible Official shall notify the Director of the Office of Air Quality immediately, and/or,

I hereby certify that all information contained in this General Permit Registration Application and any supporting documents appended hereto is, to the best of my knowledge, true, accurate and complete, and that all reasonable efforts have been made to provide the most comprehensive information possible

Signature _____ 11/2/15
(please use blue ink) Responsible Official Date

Name & Title **Tim Cummings, Vice President - Operations, Ascent**
(please print or type)

Signature _____
(please use blue ink) Authorized Representative (if applicable) Date

Applicant's Name **Ascent Resources – Marcellus, LLC**

Phone & Fax **(405) 608-5491**
Phone Fax

Email tim.cummings@ascentresources.com

Table of Contents

Attachment A

BUSINESS CERTIFICATE

State of West Virginia

Certificate

I, Natalie E. Tennant, Secretary of State of the State of West Virginia, hereby certify that

the attached true and exact copy of the Articles of Amendment to the Articles of Organization of

AMERICAN ENERGY-MARCELLUS, LLC

are filed in my office, signed and verified, as required by the provisions of West Virginia Code §31B-2-204 and conform to law. Therefore, I issue this

CERTIFICATE OF AMENDMENT TO THE CERTIFICATE OF AUTHORITY

changing the name of the limited liability company to

ASCENT RESOURCES - MARCELLUS, LLC

Given under my hand and the Great Seal of the State of West Virginia on this day of July 9, 2015

Natalie E Tennant

Secretary of State

Attachment B

PROCESS DESCRIPTION

Attachment B
Process Description

This permit application is being filed for Ascent Resources - Marcellus, LLC (Ascent), and addresses operational activities associated with the Rush 404 natural gas production site. Incoming raw natural gas from the six (6) wells is first routed through the 1.5 MMBtu/hr gas production units (GPUs) (S01 – S06) where the first stage of fluid separation occurs. The GPUs separate the well stream into a high pressure natural gas sales stream and condensate liquid stream. The liquid stream is routed to one of two 0.75 MMBtu/hr condensate heaters (S07-S08) to aid in the separation process where condensate and produced water are separated. Produced water is routed to eight (8) 210-bbl produced water storage tanks (S11 – S18). The condensate is routed to the two (2) 178-bbl condensate storage tanks (S09 – S10).

The natural gas stream will exit the facility for transmission via pipeline. Condensate and produced water are transported offsite via tank truck. Flashing, working, and breathing, emissions from the eight (8) 210-bbl produced water storage tanks and two (2) 178-bbl condensate storage tanks are routed to the enclosed combustion device (S21). Tank truck loading operations from the produced water loading operations (S20) and the condensate loading operations (S19) will be vapor balanced to the tanks and controlled by the enclosed combustion device (S21).

A process flow diagram is included as Attachment D.

Attachment C

DESCRIPTION OF FUGITIVE EMISSIONS

Attachment C
G70-A General Permit Description of Fugitive Emissions

This permit application is being filed for Ascent Resources - Marcellus, LLC (Ascent) and addresses operational activities associated with the Rush 404 natural gas production site. Fugitive emissions on the site are generated from a number of sources, including an unpaved haul road and equipment leaks. These fugitive emission sources cannot be controlled by air pollution control devices. Emission levels for fugitive emissions were calculated using AP-42 emission factors, results of a gas analysis, and 40 CFR 98 Subpart W factors and equipment counts. A summary of the fugitive emissions on the Rush 404 natural gas production site can be found in Attachment O – Emissions Summary Sheet.

Attachment D

PROCESS FLOW DIAGRAM

Attachment D

Rush 404 Natural Gas Production

Process Flow Diagram

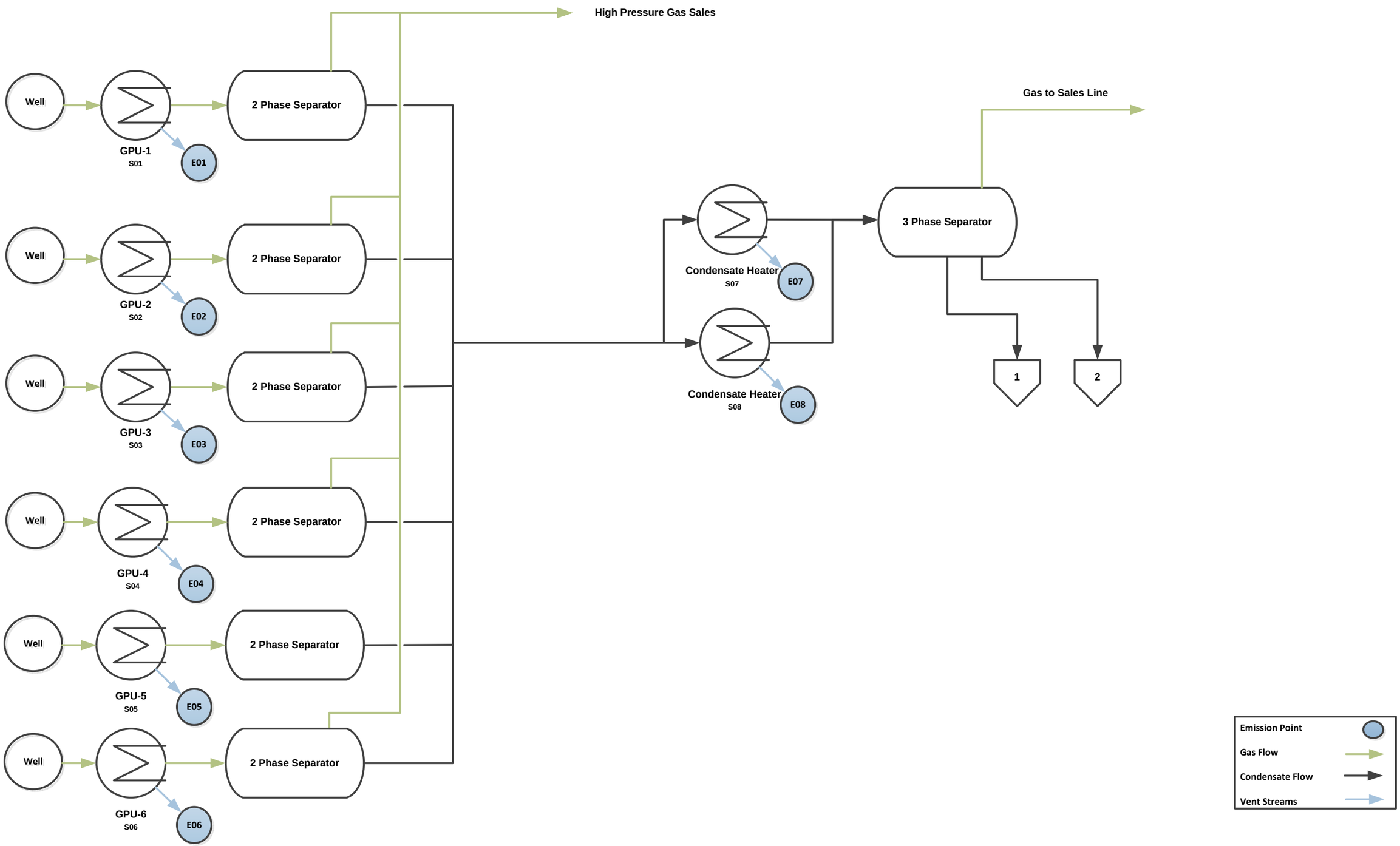

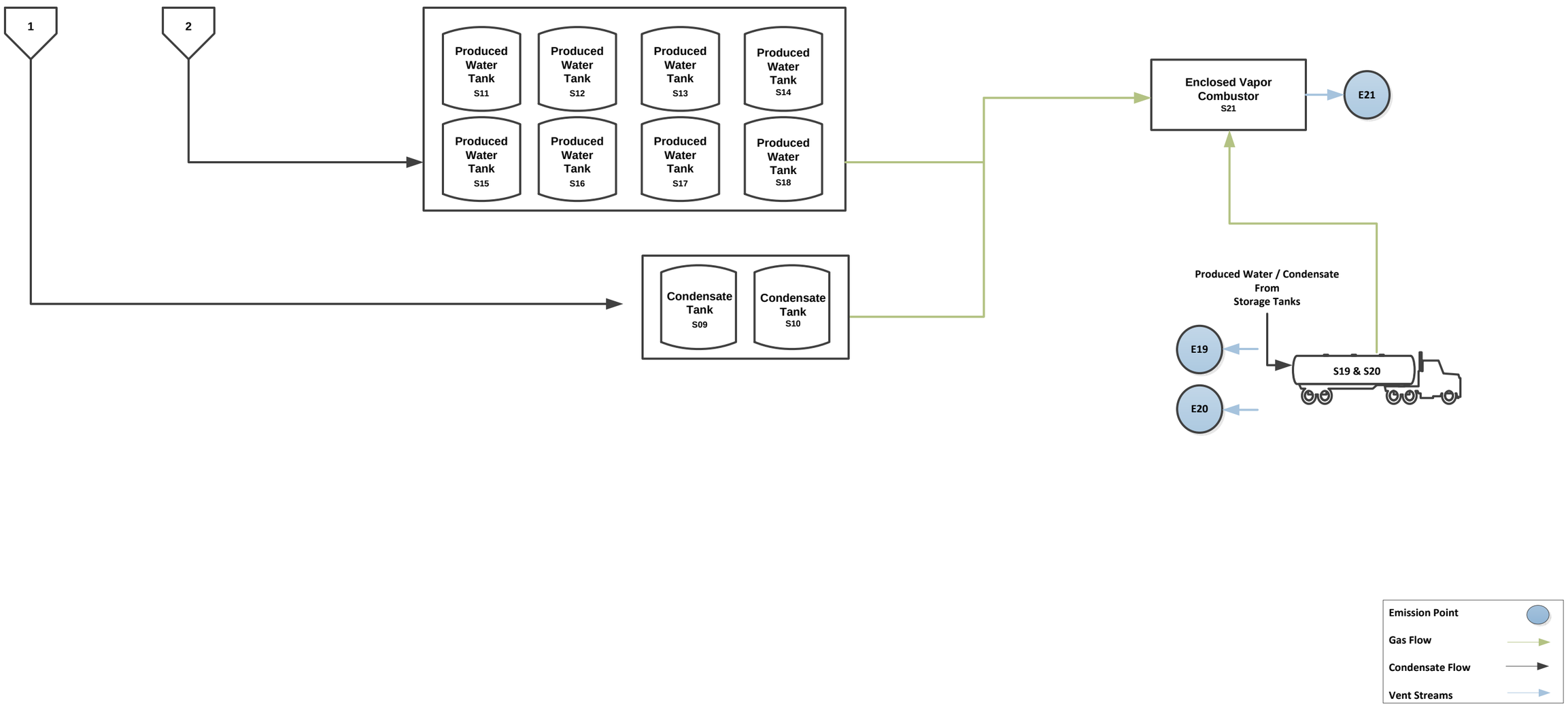
1
2
Produced Water Tank S11
Produced Water Tank S12
Produced Water Tank S13
Produced Water Tank S14
Produced Water Tank S15
Produced Water Tank S16
Produced Water Tank S17
Produced Water Tank S18
Condensate Tank S09
Condensate Tank S10
Enclosed Vapor Combustor S21
E21
Produced Water / Condensate From Storage Tanks
E19
E20
S19 & S20
Emission Point
Gas Flow
Condensate Flow
Vent Streams

Attachment E

PLOT PLAN

Attachment E

Plot Plan

Rush 404 Natural Gas Production Site

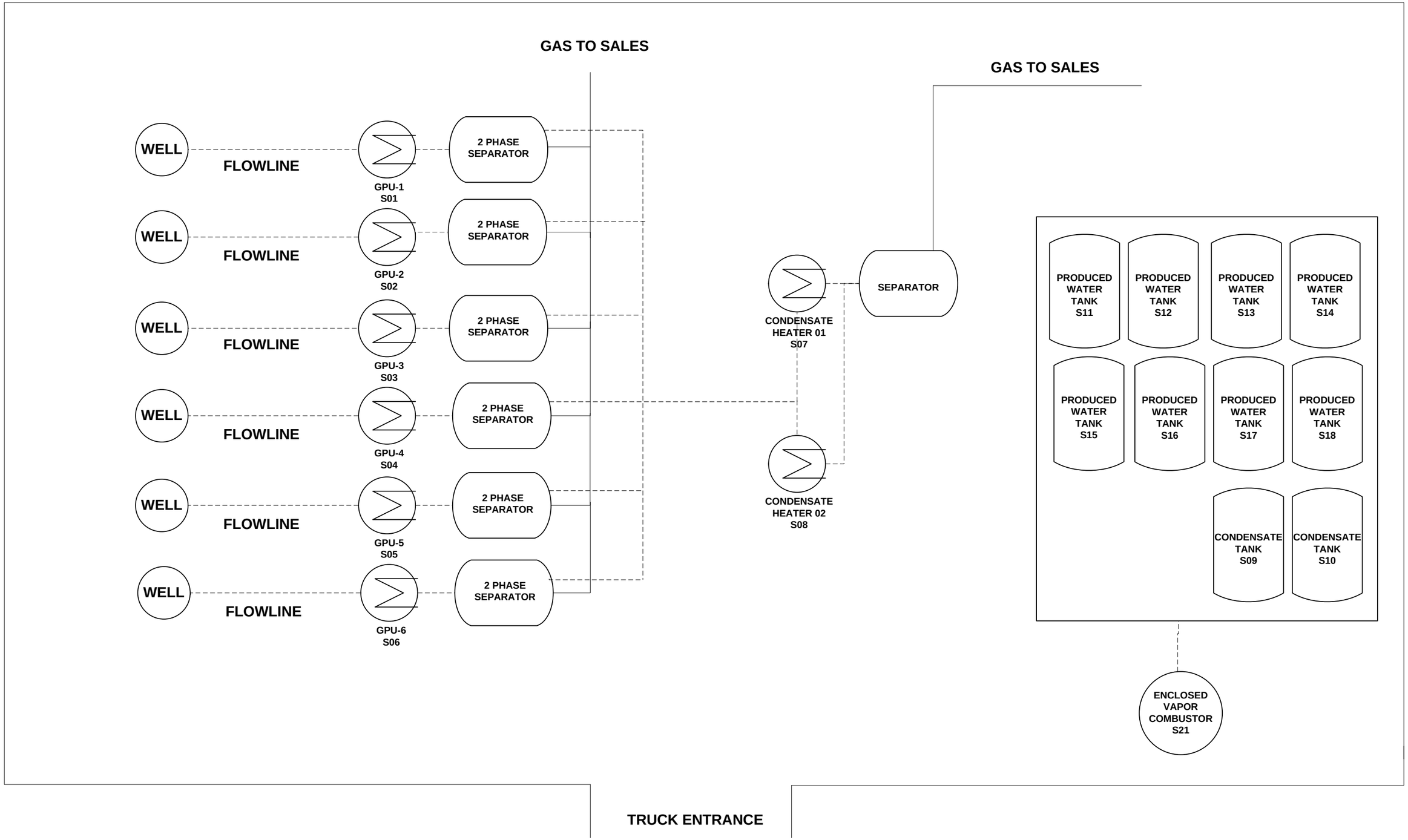

Attachment F

AREA MAP

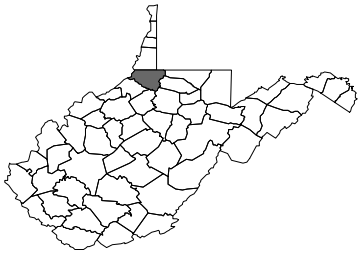

West Virginia

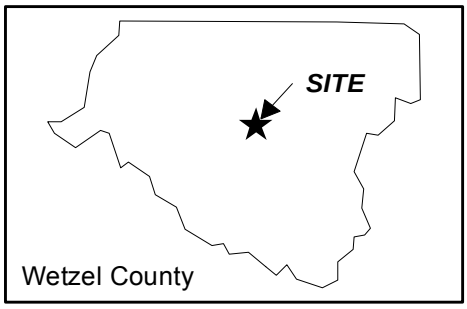

0 1,000 2,000 4,000 Feet

N

LAT. 39.61125 LON. -80.63736
WETZEL COUNTY
WEST VIRGINIA

USGS 1:24K 7.5' Quadrangle:
Pine Grove, WV

SITE LOCATION MAP

ERM	**Ascent Resources – Marcellus, LLC** Rush 404 Facility Ascent Resources – Marcellus, LLC Wetzel, West Virginia	GIS Review: JS CHK'D: JS 0319757
Drawn By: SRV-10/16/15	**Environmental Resources Management**	ATTACHMENT F

J:\GIS\Projects\SiteLocationMaps\Ascent Resources_MXD\Attachment F-Site_Location_Map_Rush404.mxd - 10/19/2015|SRV

Attachment G

EQUIPMENT DATA SHEET

General Permit G70-A Registration
Section Applicability Form

General Permit G70-A was developed to allow qualified applicants to seek registration for a variety of sources. These sources include natural gas well affected facilities, storage tanks, natural gas-fired compressor engines (RICE), natural gas producing units, natural gas-fired in-line heaters, pneumatic controllers, heater treaters, tank truck loading, glycol dehydration units, completion combustion devices, flares, enclosed combustion devices, and vapor recovery systems. All registered facilities will be subject to Sections 1.0, 2.0, 3.0, and 4.0.

General Permit G70-A allows the registrant to choose which sections of the permit they are seeking registration under. Therefore, please mark which additional sections that you are applying for registration under. If the applicant is seeking registration under multiple sections, please select all that apply. Please keep in mind, that if this registration is approved, the issued registration will state which sections will apply to your affected facility.

Section 5	Natural Gas Well Affected Facility	☒
Section 6	Storage Vessels*	☒
Section 7	Gas Producing Units, In-Line Heaters, Heater Treaters, and Glycol Dehydration Reboilers	☒
Section 8	Pneumatic Controllers Affected Facility (NSPS, Subpart OOOO)	☐
Section 9	*Reserved*	☐
Section 10	Natural gas-fired Compressor Engine(s) (RICE) **	☐
Section 11	Tank Truck Loading Facility ***	☒
Section 12	Standards of Performance for Storage Vessel Affected Facilities (NSPS, Subpart OOOO)	☐
Section 13	Standards of Performance for Stationary Spark Ignition Internal Combustion Engines (NSPS, Subpart JJJJ)	☐
Section 14	Control Devices not subject to NSPS, Subpart OOOO	☒
Section 15	National Emissions Standards for Hazardous Air Pollutants for Stationary Reciprocating Internal Combustion Engines (40CFR63, Subpart ZZZZ)	☐
Section 16	Glycol Dehydration Units	☐
Section 17	Dehydration Units With Exemption from NESHAP Standard, Subpart HH § 63.764(d) (40CFR63, Subpart HH)	☐
Section 18	Dehydration Units Subject to NESHAP Standard, Subpart HH and Not Located Within an UA/UC (40CFR63, Subpart HH)	☐
Section 19	Dehydration Units Subject to NESHAP Standard, Subpart HH and Located Within an UA/UC (40CFR63, Subpart HH)	☐

* *Applicants that are subject to Section 6 may also be subject to Section 12 if the applicant is subject to the NSPS, Subpart OOOO control requirements or the applicable control device requirements of Section 14.*

** *Applicants that are subject to Section 10 may also be subject to the applicable RICE requirements of Section 13 and/or Section 15.*

*** *Applicants that are subject to Section 11 may also be subject to control device requirements of Section 14.*

Emission Units Table

(includes all emission units and air pollution control devices that will be part of this permit application review, regardless of permitting status)

Emission Unit ID[1]	Emission Point ID[2]	Emission Unit Description	Year Installed/ Modified	Design Capacity	Type[3] and Date of Change	Control Device[4]
S01	E01	GPU Burner	2013	1.50 MMBTU/hr	Existing	NA
S02	E02	GPU Burner	2013	1.50 MMBTU/hr	Existing	NA
S03	E03	GPU Burner	2013	1.50 MMBTU/hr	Existing	NA
S04	E04	GPU Burner	2013	1.50 MMBTU/hr	Existing	NA
S05	E05	GPU Burner	2013	1.50 MMBTU/hr	Existing	NA
S06	E06	GPU Burner	2013	1.50 MMBTU/hr	Existing	NA
S07	E07	Condensate Heater	2013	0.75 MMBTU/hr	Existing	NA
S08	E08	Condensate Heater	2013	0.75 MMBTU/hr	Existing	NA
S09	E21	Condensate Tank	2013	178 bbl	Existing	C01
S10	E21	Condensate Tank	2013	178 bbl	Existing	C01
S11	E21	Produced Water Tank	2013	210 bbl	Existing	C01
S12	E21	Produced Water Tank	2013	210 bbl	Existing	C01
S13	E21	Produced Water Tank	2013	210 bbl	Existing	C01
S14	E21	Produced Water Tank	2013	210 bbl	Existing	C01
S15	E21	Produced Water Tank	2013	210 bbl	Existing	C01
S16	E21	Produced Water Tank	2013	210 bbl	Existing	C01
S17	E21	Produced Water Tank	2013	210 bbl	Existing	C01
S18	E21	Produced Water Tank	2013	210 bbl	Existing	C01
S19	E19/E21	Condensate Truck Loading	2013	6 bbl/day	Existing	C01
S20	E20/E21	Produced Water Truck Loading	2013	180 bbl/day	Existing	C01
S21/C01	E21	Enclosed Combustion Device	2013	20.83 MMBTU/hr	Existing	NA

[1] For Emission Units (or Sources) use the following numbering system:1S, 2S, 3S,... or other appropriate designation.
[2] For Emission Points use the following numbering system:1E, 2E, 3E, ... or other appropriate designation.
[3] New, modification, removal
[4] For Control Devices use the following numbering system: 1C, 2C, 3C,... or other appropriate designation.

NATURAL GAS WELL AFFECTED FACILITY DATA SHEET

Complete this data sheet if you are the owner or operator of a gas well affected facility for which construction, modification, or reconstruction commenced after August 23, 2011. This form must be completed for natural gas well affected facilities regardless of when flowback operations occur (or have occurred).

Please provide the API number(s) for each NG well at this facility:
47-103-027160000
47-103-027370000
47-103-027390000
47-103-027410000
47-103-027380000
47-103-027400000

Note: This is the same API well number(s) provided in the well completion notification and as provided to the WVDEP, Office of Oil and Gas for the well permit. The API number may be provided on the application without the state code (047).

Every oil and gas well permitted in West Virginia since 1929 has been issued an API (American Petroleum Institute) number. This API is used by agencies to identify and track oil and gas wells.

The API number has the following format: 047-001-00001

Where,
047 = State code. The state code for WV is 047.
001 = County Code. County codes are odd numbers, beginning with 001 (Barbour) and continuing to 109 (Wyoming).
00001= Well number. Each well will have a unique well number.

NATURAL GAS FIRED FUEL BURNING UNITS
EMISSION DATA SHEET

Complete the information on this data for each Gas Producing Unit(s), Heater Treater(s), and in-line heater(s) at the production pad. Reboiler information should be entered on the Glycol Dehydration Emission Unit Data Sheet.

Emission Unit ID #[1]	Emission Point ID#[2]	Emission Unit Description (Manufacturer / Model #)	Year Installed/ Modified	Type[3] and Date of Change	Control Device[4]	Design Heat Input (mmBtu/hr)[5]	Fuel Heating Value (Btu/scf)[6]
S01	E01	GPU Burner	2013	Existing	N/A	1.5	1,285
S02	E02	GPU Burner	2013	Existing	N/A	1.5	1,285
S03	E03	GPU Burner	2013	Existing	N/A	1.5	1,285
S04	E04	GPU Burner	2013	Existing	N/A	1.5	1,285
S05	E05	GPU Burner	2013	Existing	N/A	1.5	1,285
S06	E06	GPU Burner	2013	Existing	N/A	1.5	1,285
S07	E07	Condensate Heater	2013	Existing	N/A	0.75	1,285
S08	E08	Condensate Heater	2013	Existing	N/A	0.75	1,285
S21	E21	Flare	2013	Existing	N/A	21.0	1,285

1 Enter the appropriate Emission Unit (or Sources) identification numbers for each fuel burning unit located at the production pad. Gas Producing Unit Burners should be designated GPU-1, GPU-2, etc. Heater Treaters should be designated HT-1, HT-2, etc. Heaters or Line Heaters should be designated LH-1, LH-2, etc. For sources, use 1S, 2S, 3S…or other appropriate designation. Enter glycol dehydration unit Reboiler Vent data on the *Glycol Dehydration Unit Data Sheet*.

2 Enter the appropriate Emission Point identification numbers for each fuel burning unit located at the production pad. Gas Producing Unit Burners should be designated GPU-1, GPU-2, etc. Heater Treaters should be designated HT-1, HT-2, etc. Heaters or Line Heaters should be designated LH-1, LH-2, etc. For emission points, use 1E, 2E, 3E…or other appropriate designation.

3 New, modification, removal

4 Complete appropriate air pollution control device sheet for any control device.

5 Enter design heat input capacity in mmBtu/hr.

6 Enter the fuel heating value in Btu/standard cubic foot.

TANK TRUCK LOADING
EMISSION UNIT DATA SHEET

Furnish the following information for each new or modified bulk liquid transfer area or loading rack at the natural gas production pad. This form is to be used for bulk liquid transfer operations to tank trucks.

1. Emission Unit ID: **S19 (Condensate)**	2. Emission Point ID: **E19 / E21**	3. Year Installed/ Modified: **2013**
4. Emission Unit Description: **Condensate Truck Loading**		
5. Loading Area Data: **Adjacent to tanks**		
5A. Number of pumps: **1**	5B. Number of liquids loaded: **1**	5C. Maximum number of tank trucks loading at one time: **2**
6. Describe cleaning location, compounds and procedure for tank trucks: **Transfer point is kept clear of debris. Lines are kept in good working order.**		
7. Are tank trucks pressure tested for leaks at this or any other location? ☒ Yes ☐ No If YES, describe: **Cargo vessels are pressure tested in accordance with DOT requirements, if applicable**.		

8. Projected Maximum Operating Schedule (for rack or transfer point as a whole):

Maximum	Jan. - Mar.	Apr. - June	July - Sept.	Oct. - Dec.
hours/day	**24**	**24**	**24**	**24**
days/week	**7**	**7**	**7**	**7**

9. Bulk Liquid Data *(add pages as necessary):*

Liquid Name	**Condensate Liquids**		
Max. daily throughput (1000 gal/day)	**0.25**		
Max. annual throughput (1000 gal/yr)	**91.98**		
Loading Method [1]	**SUB**		
Max. Fill Rate (gal/min)	**5.7**		
Average Fill Time (min/loading)	**60**		
Max. Bulk Liquid Temperature (^{o}F)	**50**		
True Vapor Pressure [2]	**8.13**		
Cargo Vessel Condition[3]	**U**		
Control Equipment or Method [4]	**ECD**		
Minimum collection efficiency (%)	**70%**		
Minimum control efficiency (%)	**98%**		

** Continued on next page*

Maximum Emission Rate	Loading (lb/hr)	**2.81**		
	Annual (ton/yr)	**12.30**		
Estimation Method [5]		**EPA**		

Notes:

[1] BF = Bottom Fill SP = Splash Fill SUB = Submerged Fill

[2] At maximum bulk liquid temperature

[3] B = Ballasted Vessel, C = Cleaned, U = Uncleaned (dedicated service), O = other (describe)

[4] List as many as apply (complete and submit appropriate *Air Pollution Control Device Sheets as Attachment "H"*):
CA = Carbon Adsorption
VB = Dedicated Vapor Balance (closed system)
ECD = Enclosed Combustion Device
F = Flare
TO = Thermal Oxidation or Incineration

[5] EPA = EPA Emission Factor as stated in AP-42
MB = Material Balance
TM = Test Measurement based upon test data submittal
O = other (describe)

10. **Proposed Monitoring, Recordkeeping, Reporting, and Testing**
Please propose monitoring, recordkeeping, and reporting in order to demonstrate compliance with the proposed operating parameters. Please propose testing in order to demonstrate compliance with the proposed emissions limits.

MONITORING *Please list and describe the process parameters and ranges that are proposed to be monitored in order to demonstrate compliance with the operation of this process equipment operation/air pollution control device.* **The loadout operation will be visual monitored during the procedure.**	RECORDKEEPING *Please describe the proposed recordkeeping that will accompany the monitoring.* **Records will be kept of the amount of liquids transferred, as well as the frequency of the operation.**
REPORTING *Please describe the proposed frequency of reporting of the recordkeeping.* **Reporting of records will be performed as required by permit standards.**	TESTING *Please describe any proposed emissions testing for this process equipment/air pollution control device.* **Testing will be performed as required by applicable standards.**

11. Describe all operating ranges and maintenance procedures required by Manufacturer to maintain warranty:

N/A

TANK TRUCK LOADING
EMISSION UNIT DATA SHEET

Furnish the following information for each new or modified bulk liquid transfer area or loading rack at the natural gas production pad. This form is to be used for bulk liquid transfer operations to tank trucks.

1. Emission Unit ID: **S20 (Produced Water)**	2. Emission Point ID: **E20 / E21**	3. Year Installed/ Modified: **2013**
4. Emission Unit Description: **The emissions from truck loading.**		
5. Loading Area Data: **Adjacent to tanks**		
5A. Number of pumps: **1**	5B. Number of liquids loaded: **1**	5C. Maximum number of tank trucks loading at one time: **2**
6. Describe cleaning location, compounds and procedure for tank trucks: **Transfer point is kept clear of debris. Lines are kept in good working order.**		
7. Are tank trucks pressure tested for leaks at this or any other location? ☒ Yes ☐ No If YES, describe: **Cargo vessels are pressure tested in accordance with DOT requirements, if applicable.**		

8. Projected Maximum Operating Schedule (for rack or transfer point as a whole):

Maximum	Jan. - Mar.	Apr. - June	July - Sept.	Oct. - Dec.
hours/day	**24**	**24**	**24**	**24**
days/week	**7**	**7**	**7**	**7**

9. Bulk Liquid Data *(add pages as necessary):*

Liquid Name	**Produced Water**		
Max. daily throughput (1000 gal/day)	**7.56**		
Max. annual throughput (1000 gal/yr)	**2,759.4**		
Loading Method [1]	**SUB**		
Max. Fill Rate (gal/min)	**5.7**		
Average Fill Time (min/loading)	**60**		
Max. Bulk Liquid Temperature (^{o}F)	**50**		
True Vapor Pressure [2]	**NA**		
Cargo Vessel Condition[3]	**U**		
Control Equipment or Method [4]	**ECD**		
Minimum collection efficiency (%)	**70%**		
Minimum control efficiency (%)	**98%**		

** Continued on next page*

Maximum Emission Rate	Loading (lb/hr)	**0.85**		
	Annual (ton/yr)	**3.71**		
Estimation Method [5]		**EPA**		

Notes:

[1] BF = Bottom Fill SP = Splash Fill SUB = Submerged Fill

[2] At maximum bulk liquid temperature

[3] B = Ballasted Vessel, C = Cleaned, U = Uncleaned (dedicated service), O = other (describe)

[4] List as many as apply (complete and submit appropriate *Air Pollution Control Device Sheets as Attachment "H"*):
CA = Carbon Adsorption
VB = Dedicated Vapor Balance (closed system)
ECD = Enclosed Combustion Device
F = Flare
TO = Thermal Oxidation or Incineration

[5] EPA = EPA Emission Factor as stated in AP-42
MB = Material Balance
TM = Test Measurement based upon test data submittal
O = other (describe)

10. **Proposed Monitoring, Recordkeeping, Reporting, and Testing**
Please propose monitoring, recordkeeping, and reporting in order to demonstrate compliance with the proposed operating parameters. Please propose testing in order to demonstrate compliance with the proposed emissions limits.

MONITORING ***Please list and describe the process parameters and ranges that are proposed to be monitored in order to demonstrate compliance with the operation of this process equipment operation/air pollution control device.*** **The loadout operation will be visual monitored during the procedure.**	**RECORDKEEPING** ***Please describe the proposed recordkeeping that will accompany the monitoring.*** **Records will be kept of the amount of liquids transferred, as well as the frequency of the operation. Produced Water truck tickets will be maintained. Production data will be recorded.**
REPORTING *Please describe the proposed frequency of reporting of the recordkeeping.* **Reporting of records will be performed as required by permit standards.**	TESTING *Please describe any proposed emissions testing for this process equipment/air pollution control device.* **Testing will be performed as required by applicable standards.**

11. Describe all operating ranges and maintenance procedures required by Manufacturer to maintain warranty:

N/A

LEAK SOURCE DATA SHEET

Source Category	Pollutant	Number of Source Components[1]	Number of Components Monitored by Frequency[2]	Average Time to Repair (days)[3]	Estimated Annual Emission Rate (lb/yr)[4]
Pumps[5]	light liquid VOC[6,7]	--	--	--	--
	heavy liquid VOC[8]	--	--	--	--
	Non-VOC[9]	--	--	--	--
Valves[10]	Gas VOC	**322**	**N/A**	**N/A**	**525.6**
	Light Liquid VOC	--	--	--	--
	Heavy Liquid VOC	--	--	--	--
	Non-VOC	--	--	--	--
Safety Relief Valves[11]	Gas VOC	**14**	**N/A**	**N/A**	**35.04**
	Non VOC	--	--	--	--
Open-ended Lines[12]	VOC	**18**	**N/A**	**N/A**	**87.6**
	Non-VOC	--	--	--	--
Sampling Connections[13]	VOC	--	--	--	--
	Non-VOC	--	--	--	--
Compressors	VOC	--	--	--	--
	Non-VOC	--	--	--	--
Flanges	VOC	**876**	**N/A**	**N/A**	**262.8**
	Non-VOC	--	--	--	--
Other	VOC	--	--	--	--
	Non-VOC	--	--	--	--

[1 - 13] See notes on the following page.

STORAGE VESSEL EMISSION UNIT DATA SHEET

Provide the following information for each new or modified bulk liquid storage tank.

I. GENERAL INFORMATION (required)

1. Bulk Storage Area Name **Condensate Storage**	2. Tank Name **Two (2) 178 bbl Condensate Storage Tanks**
3. Emission Unit ID number **S09 & S10**	4. Emission Point ID number **E21**
5. Date Installed or Modified *(for existing tanks)* **2013**	6. Type of change: ☐ New construction ☐ New stored material ☒ Other
7A. Description of Tank Modification *(if applicable)*	
7B. Will more than one material be stored in this tank? *If so, a separate form must be completed for each material.* ☐ Yes ☒ No	
7C. Provide any limitations on source operation affecting emissions. (production variation, etc.) **N/A**	

II. TANK INFORMATION (required)

8. Design Capacity *(specify barrels or gallons).* Use the internal cross-sectional area multiplied by internal height. **356 bbl**	
9A. Tank Internal Diameter (ft.) **8**	9B. Tank Internal Height (ft.) **20**
10A. Maximum Liquid Height (ft.) **18**	10B. Average Liquid Height (ft.) **10**
11A. Maximum Vapor Space Height (ft.) **20**	11B. Average Vapor Space Height (ft.) **10**
12. Nominal Capacity *(specify barrels or gallons)*. This is also known as "working volume. **14,952**	
13A. Maximum annual throughput (gal/yr) **91,980**	13B. Maximum daily throughput (gal/day) **252**
14. Number of tank turnovers per year **7.0**	15. Maximum tank fill rate (gal/min) **0.18**
16. Tank fill method ☐ Submerged ☒ Splash ☐ Bottom Loading	
17. Is the tank system a variable vapor space system? ☐ Yes ☒ No If yes, (A) What is the volume expansion capacity of the system (gal)? (B) What are the number of transfers into the system per year?	
18. Type of tank (check all that apply): ☒ Fixed Roof _X_ vertical ___ horizontal ___ flat roof ___ cone roof _X_ dome roof ___ other (describe) ☐ External Floating Roof ___ pontoon roof ___ double deck roof ☐ Domed External (or Covered) Floating Roof ☐ Internal Floating Roof ___ vertical column support ___ self-supporting ☐ Variable Vapor Space ___ lifter roof ___ diaphragm ☐ Pressurized ___ spherical ___ cylindrical ☐ Underground ☐ Other (describe)	

III. TANK CONSTRUCTION AND OPERATION INFORMATION *(check which one applies)*

☐ Refer to enclosed TANKS Summary Sheets
☒ Refer to the responses to items 19 – 26 in section VII

IV. SITE INFORMATION *(check which one applies)*

☐ Refer to enclosed TANKS Summary Sheets
☒ Refer to the responses to items 27 – 33 in section VII

V. LIQUID INFORMATION *(check which one applies)*

☐ Refer to enclosed TANKS Summary Sheets

☒ Refer to the responses to items 34 – 39 in section VII

VI. EMISSIONS AND CONTROL DEVICE DATA (required)

40. Emission Control Devices (check as many as apply):

☐ Does Not Apply
☐ Carbon Adsorption[1]
☒ Vent to Vapor Combustion Device[1] (vapor combustors, flares, thermal oxidizers)
☐ Condenser[1]
☐ Other[1] (describe)
☐ Rupture Disc (psig)
☐ Inert Gas Blanket of _____
☐ Conservation Vent (psig
Vacuum Setting Pressure Setting
☐ Emergency Relief Valve (psig)

[1] Complete appropriate Air Pollution Control Device Sheet

41. Expected Emission Rate (submit Test Data or Calculations here or elsewhere in the application).

Material Name and CAS No.	**Flashing Loss**		**Breathing Loss**		**Working Loss**		**Total Emissions Loss**		**Estimation Method[1]**
	lb/hr	**tpy**	**lb/hr**	**tpy**	**lb/hr**	**tpy**	**lb/hr**	**tpy**	
	See Attachment O								**EP Tanks**

[1] EPA = EPA Emission Factor, MB = Material Balance, SS = Similar Source, ST = Similar Source Test, Throughput Data, O = Other (specify)

Remember to attach emissions calculations, including TANKS Summary Sheets and other modeling summary sheets if applicable.

SECTION VII (required if did not provide TANKS Summary Sheets)

TANK CONSTRUCTION AND OPERATION INFORMATION

19. Tank Shell Construction:
☐ Riveted ☐ Gunite lined ☒ Epoxy-coated rivets ☐ Other (describe)

20A. Shell Color: **White**	20B. Roof Color: **White**	20C. Year Last Painted: **N/A**

21. Shell Condition (if metal and unlined):
☒ No Rust ☐ Light Rust ☐ Dense Rust ☐ Not applicable

22A. Is the tank heated? ☐ Yes ☒ No	22B. If yes, operating temperature:	22C. If yes, how is heat provided to tank?

23. Operating Pressure Range (psig): **6**

24. Is the tank a **Vertical Fixed Roof Tank**? ☒ Yes ☐No	24A. If yes, for dome roof provide radius (ft): **N/A**	24B. If yes, for cone roof, provide slop (ft/ft):**0.82**

25. Complete item 25 for **Floating Roof Tanks** ☐ Does not apply ☒

25A. Year Internal Floaters Installed:

25B. Primary Seal Type *(check one):* ☐ Metallic (mechanical) shoe seal ☐ Liquid mounted resilient seal ☐ Vapor mounted resilient seal ☐ Other (describe):

25C. Is the Floating Roof equipped with a secondary seal? ☐ Yes ☐No

25D. If yes, how is the secondary seal mounted? *(check one)* ☐ Shoe ☐ Rim ☐ Other (describe):

25E. Is the floating roof equipped with a weather shield? ☐ Yes ☐ No

25F. Describe deck fittings:

26. Complete the following section for **Internal Floating Roof Tanks** ☒ Does not apply

26A. Deck Type: ☐ Bolted ☐ Welded	26B. For bolted decks, provide deck construction:

26C. Deck seam. Continuous sheet construction: ☐ 5 ft. wide ☐ 6 ft. wide ☐ 7 ft. wide ☐ 5 x 7.5 ft. wide ☐ 5 x 12 ft. wide ☐ other (describe)			
26D. Deck seam length (ft.):	26E. Area of deck (ft^2):	26F. For column supported tanks, # of columns:	26G. For column supported tanks, diameter of column:
SITE INFORMATION:			
27. Provide the city and state on which the data in this section are based: Pittsburgh, Pa			
28. Daily Avg. Ambient Temperature (°F): **65**		29. Annual Avg. Maximum Temperature (°F): **70**	
30. Annual Avg. Minimum Temperature (°F): **55**		31. Avg. Wind Speed (mph): **5**	
32. Annual Avg. Solar Insulation Factor (BTU/ft^2-day): **1,202**		33. Atmospheric Pressure (psia): **14.11**	
LIQUID INFORMATION:			
34. Avg. daily temperature range of bulk liquid (°F):**65**	34A. Minimum (°F): **55**	34B. Maximum (°F): **70**	
35. Avg. operating pressure range of tank (psig): **5.9**	35A. Minimum (psig): **5.4**	35B. Maximum (psig): **6.5**	
36A. Minimum liquid surface temperature (°F): **47**		36B. Corresponding vapor pressure (psia): **5.4**	
37A. Avg. liquid surface temperature (°F): **50**		37B. Corresponding vapor pressure (psia): **5.9**	
38A. Maximum liquid surface temperature (°F): **56**		38B. Corresponding vapor pressure (psia): **6.5**	
39. Provide the following for each liquid or gas to be stored in the tank. Add additional pages if necessary.			
39A. Material name and composition:	**Condensate**		
39B. CAS number:	**68919-39-1**		
39C. Liquid density (lb/gal):	**5**		
39D. Liquid molecular weight (lb/lb-mole):	**96.24**		
39E. Vapor molecular weight (lb/lb-mole):	**49.6**		
39F. Maximum true vapor pressure (psia):	**1.12**		
39G. Maxim Reid vapor pressure (psia):	**12.5**		
39H. Months Storage per year. From: To:	**January - December**		

STORAGE VESSEL EMISSION UNIT DATA SHEET

Provide the following information for each new or modified bulk liquid storage tank.

I. GENERAL INFORMATION (required)

1. Bulk Storage Area Name **Produced Water Storage**	2. Tank Name **Eight (8) 210 bbl Produced Water Storage Tanks**
3. Emission Unit ID number **S11 – S18**	4. Emission Point ID number **E21**
5. Date Installed or Modified *(for existing tanks)* **2013**	6. Type of change: ☐ New construction ☐ New stored material ☒ Other
7A. Description of Tank Modification *(if applicable)*	
7B. Will more than one material be stored in this tank? *If so, a separate form must be completed for each material.* ☐ Yes ☒ No	
7C. Provide any limitations on source operation affecting emissions. (production variation, etc.) **N/A**	

II. TANK INFORMATION (required)

8. Design Capacity *(specify barrels or gallons).* Use the internal cross-sectional area multiplied by internal height. **210 bbl**	
9A. Tank Internal Diameter (ft.) **12**	9B. Tank Internal Height (ft.) **20**
10A. Maximum Liquid Height (ft.) **18**	10B. Average Liquid Height (ft.) **10**
11A. Maximum Vapor Space Height (ft.) **20**	11B. Average Vapor Space Height (ft.) **10**
12. Nominal Capacity *(specify barrels or gallons)*. This is also known as "working volume. **70,560**	
13A. Maximum annual throughput (gal/yr) **2,759,400**	13B. Maximum daily throughput (gal/day) **7,560**
14. Number of tank turnovers per year **39**	15. Maximum tank fill rate (gal/min) **5.25**
16. Tank fill method ☐ Submerged ☒ Splash ☐ Bottom Loading	
17. Is the tank system a variable vapor space system? ☐ Yes ☒ No If yes, (A) What is the volume expansion capacity of the system (gal)? (B) What are the number of transfers into the system per year?	
18. Type of tank (check all that apply): ☒ Fixed Roof _X_ vertical ___ horizontal ___ flat roof _X__ cone roof __ dome roof ___ other (describe) ☐ External Floating Roof ___ pontoon roof ___ double deck roof ☐ Domed External (or Covered) Floating Roof ☐ Internal Floating Roof ___ vertical column support ___ self-supporting ☐ Variable Vapor Space ___ lifter roof ___ diaphragm ☐ Pressurized ___ spherical ___ cylindrical ☐ Underground ☐ Other (describe)	

III. TANK CONSTRUCTION AND OPERATION INFORMATION *(check which one applies)*

☐ Refer to enclosed TANKS Summary Sheets
☒ Refer to the responses to items 19 – 26 in section VII

IV. SITE INFORMATION *(check which one applies)*

☐ Refer to enclosed TANKS Summary Sheets
☒ Refer to the responses to items 27 – 33 in section VII

V. LIQUID INFORMATION *(check which one applies)*

☐ Refer to enclosed TANKS Summary Sheets

☒ Refer to the responses to items 34 – 39 in section VII

VI. EMISSIONS AND CONTROL DEVICE DATA (required)

40. Emission Control Devices (check as many as apply):

☐ Does Not Apply
☐ Carbon Adsorption[1]
☒ Vent to Vapor Combustion Device[1] (vapor combustors, flares, thermal oxidizers)
☐ Condenser[1]
☐ Other[1] (describe)
☐ Rupture Disc (psig)
☐ Inert Gas Blanket of _____
☐ Conservation Vent (psig
Vacuum Setting Pressure Setting
☐ Emergency Relief Valve (psig)

[1] Complete appropriate Air Pollution Control Device Sheet

41. Expected Emission Rate (submit Test Data or Calculations here or elsewhere in the application).

Material Name and CAS No.	**Flashing Loss**		**Breathing Loss**		**Working Loss**		**Total Emissions Loss**		**Estimation Method[1]**
	lb/hr	**tpy**	**lb/hr**	**tpy**	**lb/hr**	**tpy**	**lb/hr**	**tpy**	
	See Attachment O								**E&P Tanks**

[1] EPA = EPA Emission Factor, MB = Material Balance, SS = Similar Source, ST = Similar Source Test, Throughput Data, O = Other (specify)

Remember to attach emissions calculations, including TANKS Summary Sheets and other modeling summary sheets if applicable.

SECTION VII (required if did not provide TANKS Summary Sheets)

TANK CONSTRUCTION AND OPERATION INFORMATION

19. Tank Shell Construction:
☐ Riveted ☐ Gunite lined ☒ Epoxy-coated rivets ☐ Other (describe)

20A. Shell Color: **White**	20B. Roof Color: **White**	20C. Year Last Painted: **N/A**

21. Shell Condition (if metal and unlined):
☒ No Rust ☐ Light Rust ☐ Dense Rust ☐ Not applicable

22A. Is the tank heated? ☐ Yes ☒ No	22B. If yes, operating temperature:	22C. If yes, how is heat provided to tank?

23. Operating Pressure Range (psig): 6

24. Is the tank a **Vertical Fixed Roof Tank**? ☒ Yes ☐No	24A. If yes, for dome roof provide radius (ft):**N/A**	24B. If yes, for cone roof, provide slop (ft/ft):**0.82**

25. Complete item 25 for **Floating Roof Tanks** ☐ Does not apply ☒

25A. Year Internal Floaters Installed:

25B. Primary Seal Type *(check one):* ☐ Metallic (mechanical) shoe seal ☐ Liquid mounted resilient seal ☐ Vapor mounted resilient seal ☐ Other (describe):

25C. Is the Floating Roof equipped with a secondary seal? ☐ Yes ☐No

25D. If yes, how is the secondary seal mounted? *(check one)* ☐ Shoe ☐ Rim ☐ Other (describe):

25E. Is the floating roof equipped with a weather shield? ☐ Yes ☐ No

25F. Describe deck fittings:

26. Complete the following section for **Internal Floating Roof Tanks** ☒ Does not apply

26A. Deck Type: ☐ Bolted ☐ Welded	26B. For bolted decks, provide deck construction:

26C. Deck seam. Continuous sheet construction: ☐ 5 ft. wide ☐ 6 ft. wide ☐ 7 ft. wide ☐ 5 x 7.5 ft. wide ☐ 5 x 12 ft. wide ☐ other (describe)			
26D. Deck seam length (ft.):	26E. Area of deck (ft^2):	26F. For column supported tanks, # of columns:	26G. For column supported tanks, diameter of column:
SITE INFORMATION:			
27. Provide the city and state on which the data in this section are based: Pittsburgh, Pa			
28. Daily Avg. Ambient Temperature (°F): **65**		29. Annual Avg. Maximum Temperature (°F): **70**	
30. Annual Avg. Minimum Temperature (°F): **55**		31. Avg. Wind Speed (mph): **5**	
32. Annual Avg. Solar Insulation Factor (BTU/ft^2-day): **1,202**		33. Atmospheric Pressure (psia): **14.11**	
LIQUID INFORMATION:			
34. Avg. daily temperature range of bulk liquid (°F): **65**	34A. Minimum (°F): **55**	34B. Maximum (°F): **70**	
35. Avg. operating pressure range of tank (psig): **5.9**	35A. Minimum (psig): **5.4**	35B. Maximum (psig): **6.5**	
36A. Minimum liquid surface temperature (°F): **47**		36B. Corresponding vapor pressure (psia): **5.4**	
37A. Avg. liquid surface temperature (°F): **50**		37B. Corresponding vapor pressure (psia): **5.9**	
38A. Maximum liquid surface temperature (°F): **56**		38B. Corresponding vapor pressure (psia): **6.5**	
39. Provide the following for each liquid or gas to be stored in the tank. Add additional pages if necessary.			
39A. Material name and composition:	**Produced Water**		
39B. CAS number:			
39C. Liquid density (lb/gal):	**5**		
39D. Liquid molecular weight (lb/lb-mole):	**18.02**		
39E. Vapor molecular weight (lb/lb-mole):	**18.02**		
39F. Maximum true vapor pressure (psia):	**NA**		
39G. Maxim Reid vapor pressure (psia):	**NA**		
39H. Months Storage per year. From: To:	**January - December**		

Attachment H

AIR POLLUTION CONTROL DEVICE SHEET

AIR POLLUTION CONTROL DEVICE
Vapor Combustion Control Device Sheet

Complete this vapor combustion control device sheet for each enclosed combustion device, flare, thermal oxidizer, or completion combustion device that is located at the natural gas production pad for the purpose of thermally destructing waste gas to control emissions of regulated pollutants to the atmosphere.

IMPORTANT: READ THE INSTRUCTIONS ACCOMPANYING THIS FORM BEFORE COMPLETING.

General Information

1. Control Device ID#: **S21 / C01**	2. Installation Date: **2013**	☐ New
3. Maximum Rated Total Flow Capacity: **227,236 scfd**	4. Maximum Design Heat Input: **20.83 MMBtu/hr**	5. Design Heat Content: **2,200 BTU/scf**

Control Device Information

6. Select the type of vapor combustion control device being used: ☒ Enclosed Combustion Device

☐ Elevated Flare ☐ Ground Flare ☐ Thermal Oxidizer ☐ Completion Combustion Device

7. Manufacturer: Hero Flare Model No.: **G30U4**	8. Hours of operation per year: **8,760**

9. List the emission units whose emissions are controlled by this vapor combustion control device:
(Emission Point ID#: S09 – S18)

10. Emission Unit ID#	Emission Source Description:	Emission Unit ID#	Emission Source Description:
S09 – S10	**Condensate Tanks**	**E19**	**Tank Truck Loading**
S11 – S18	**Produced Water Tanks**	**E20**	**Tank Truck Loading**

If this vapor combustor controls emissions from more than six emission units, please attach additional pages.

11. Assist Type	12. Flare Height	13. Tip Diameter	14. Was the design per §60.18?
☐ Steam - ☐ Air - ☐ Pressure - ☒ Non -	**30 ft**	**N/A ft**	☒Yes ☐No

Waste Gas Information

15. Maximum waste gas flow rate (scfm):	16. Heat value of waste gas stream (BTU/ft3)	17. Temperature of the emissions stream (°F)	18. Exit Velocity of the emissions stream (ft/s)
139.6	**1,285**	**1,400 – 2,100**	**N/A**

19. Provide an attachment with the characteristics of the waste gas stream to be burned.

Pilot Information				
20. Type/Grade of pilot fuel:	21. Number of pilot lights:	22. Fuel flow rate to pilot flame per pilot (scf/hr):	23. Heat input per pilot (BTU/hr):	24. Will automatic re-ignition be used?
Natural Gas	**Continuous Pilot**	**13.6**	**17,500**	☐ Yes ☐ No
25. If automatic re-ignition will be used, describe the method:				
26. Describe the method of controlling flame: **Smokeless Capacity**				
27. Is pilot flame equipped with a monitor to detect the presence of the flame? ☒ Yes ☐ No	28. If yes, what type? ☒ Thermocouple ☐ Infra-Red ☐ Ultra Violet ☐ Camera with monitoring control room ☐ Other, describe:			

29. Pollutant(s) Controlled	30. % Capture Efficiency	31. Manufacturer's Guaranteed Control Efficiency (%)
VOC	**100**	**98**

32. Has the control device been tested by the manufacturer and certified?

See Attached Information

33. Describe all operating ranges and maintenance procedures required by the manufacturer to maintain warranty:

See Attached Information

34. Additional Information Attached? ☒ **YES** ☐ **NO**

Please attach a copy of manufacturer's data sheet.
Please attach a copy of manufacturer's drawing.
Please attach a copy of the manufacturer's performance testing.

If any of the requested information is not available, please contact the manufacturer.

HERO Flare

Quality flares that work every time.

Operations and Maintenance Manual

G30U4 Utility Flares

www.heroflare.com

ITEM #	QTY	DESCRIPTION
N1	1	INLET, 4", 150#, RFSO, CS
C1	1	DRAIN PLUG, 1", CS
C2	1	FUEL GAS COUPLING, 1/2", CS
1	1	FLARE TIP, 12" x 4", 304SS
2	1	STACK, 4" S40, A-53 GR B
4	3	GUY LUGS, 3/8" PLATE, CS
6	1	RS-1 BOTTOM BRACKET, CS
7	1	FLOOR PLATE, 1/4" PLATE, CS
8	1	BASE FLANGE, 4" 150#, RFSO, CS
RS-1	1	RETRACTABLE SYSTEM FOR PILOT
HESFG	1	PILOT, SPARK IGNITED, 304SS
TC1	1	THERMOCOUPLE, TYPE K
9	AR	FUEL GAS HOSE, BRAIDED
10	AR	CONDUIT, 3/4", FLEXIBLE
11	AR	WIRE, IGNITION, 3 CONDUCTOR
12	AR	WIRE, THERMOCOUPLE, TYPE K
		THE FOLLOWING ITEMS SHIP LOOSE FOR FIELD INSTALLATION
13	3	GUY WIRE, 5/16" x 35FT WITH CLIPS, THIMBLES, & TURNBUCKLES
		OPTION - "NO CONCRETE" PACKAGE
15	N/A	GROUND PLATE, 20"x20"x1/2", CS
16	N/A	GROUND ANCHORS WITH INSTALLATION TOOLS

NOTE: LENGTHS OF WIRE, TUBING, AND CONDUIT CAN BE INCREASED IF PANEL IS LOCATED FURTHER THAN 10FT FROM THE FLARE.

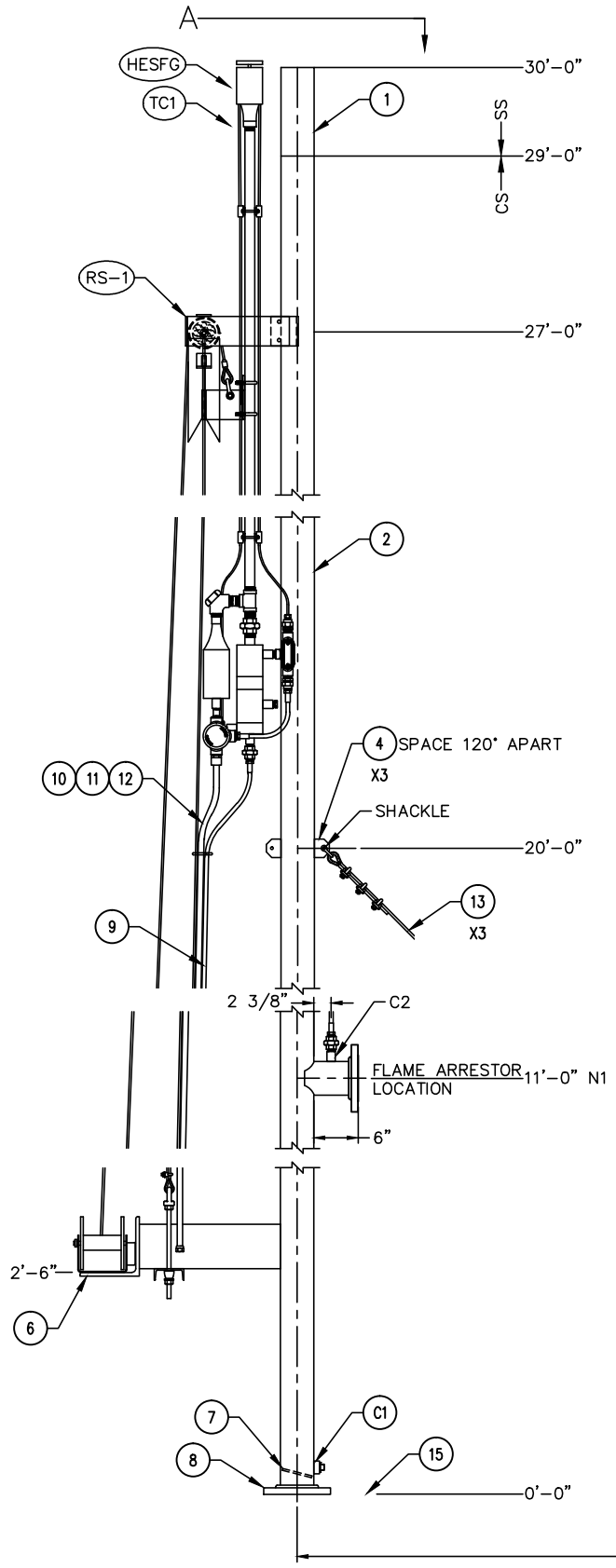

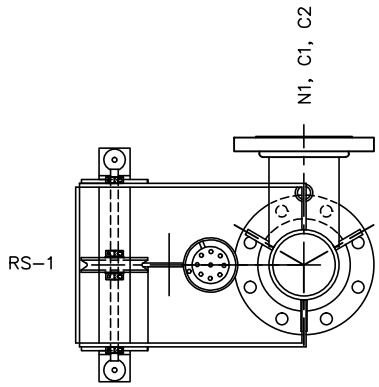

SECTION A

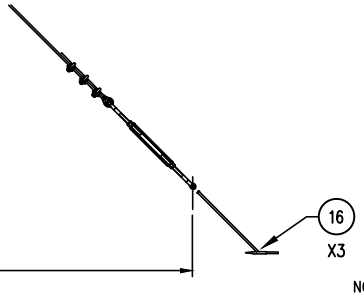

NOTES:
1. WELDING PER ASME B31.4
2. FABRICATION PER AISC
3. SMOOTH CUT ALL HOLES
4. MATERIALS: A-36 U.N.O.

Hero Flare
445 FM20, Bastrop TX, 78602
Tel: (512) 772-5744 www.heroflare.com

USER	HG ENERGY
JOB SITE	
JOB	

30FT UTILITY FLARE
4" INLET

DRAWN: NJ	APPR.	JOB NO: H14132	DWG. NO: G30U4R
DATE: 5/13/13	DATE:		REV. S

ITEM#	QTY	DESCRIPTION	PART NUMBER
1	1	PILOT WIND SHEILD, 304SS	
2	1	PILOT NOZZLE	SP8-PNA
	1	SPARK IGNITER, INTERNAL	4K30-U-72-SB
4	1	THERMOCOUPLE, TYPE K	
5	1	FLOW GENERATOR	DSI-FG/424
6	1	FUEL GAS LINE TO PILOT	
7	1	IGNITION COIL ASSEMBLY	PART NUMBER
8	AR	FLEX HOSE/CONDUIT	
9	AR	PIPE, 1" S40, 304SS	
10	AR	BRAIDED FLEX HOSE, FUEL GAS	
11	1	TOP MOUNTING BRACKET	
12	1	BOTTOM MOUNTING BRACKET	
13	1	STAB BRACKET	

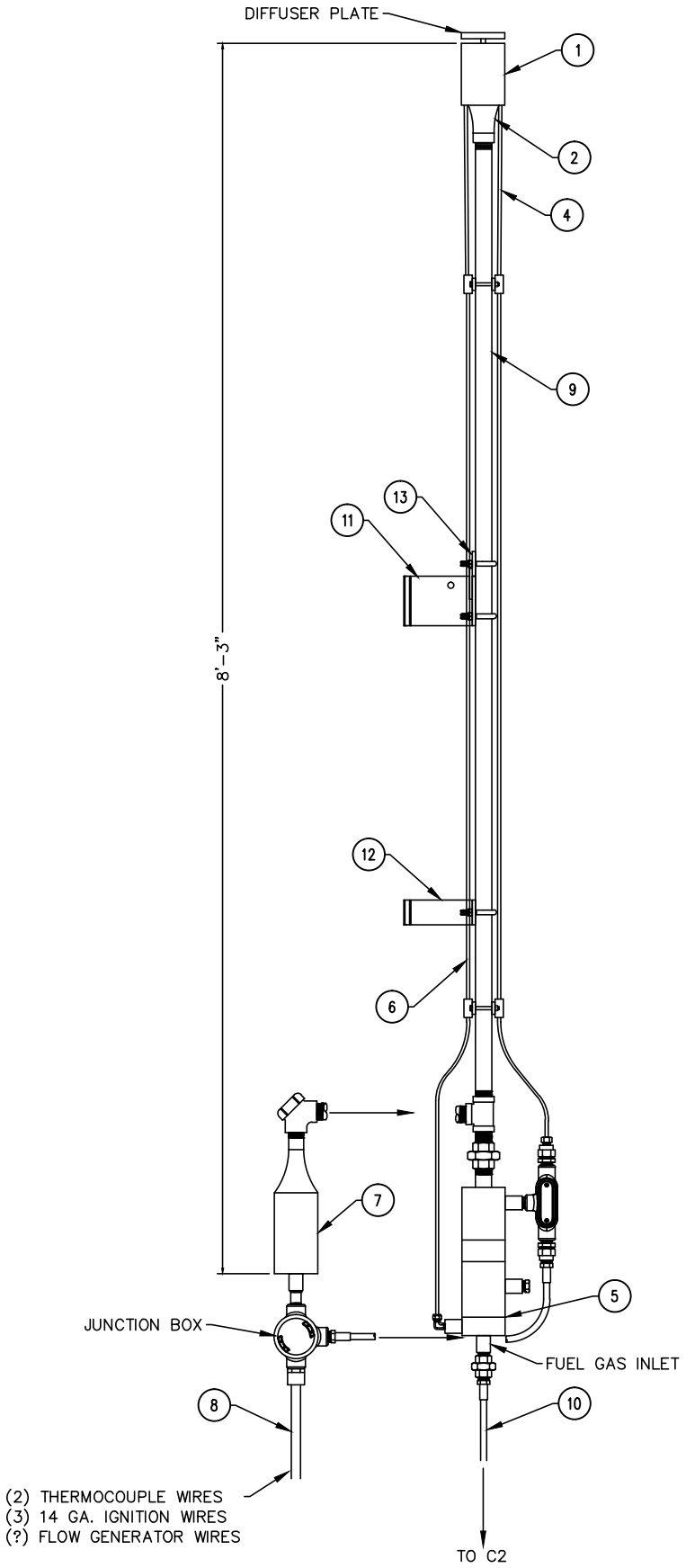

RED	BLACK	GREEN	YELL.	RED	GRD
1	2	3	4	5	6

DETAIL OF TERMINAL STRIP IN JUNCTION BOX

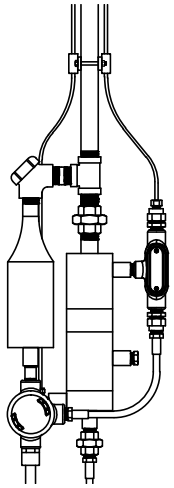

ASSEMBLED VIEW
AT FLOW GENERATOR

Hero Flare
445 FM20, Bastrop, TX 78602
Tel: (512) 772-5744 www.heroflare.com

USER	HG ENERGY
JOB SITE	
JOB	

HIGH ENERGY
SPARK IGNITED PILOT
WITH FLOW GENERATOR

DRAWN: NJ	APPR.	JOB NO: H14132	DWG. NO: HESFG-1
DATE: 5/10/13	DATE:		REV. S

ITEM #	QTY	DESCRIPTION
1	1	PIPE, 2" S40 X 7FT LONG, GALV.

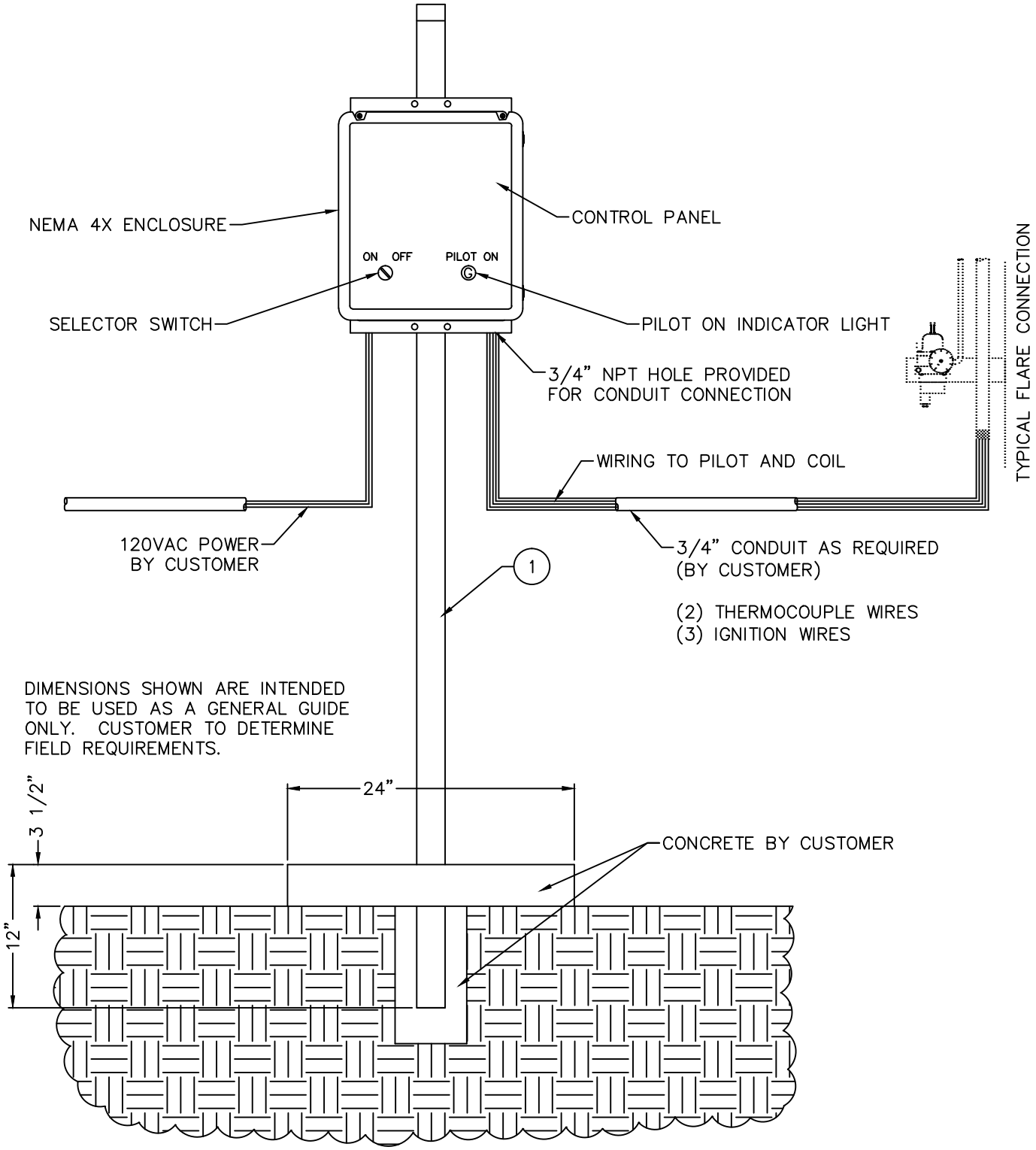

NOTE: CONTROL PANEL WEIGHT WITH BATTERY = 77 LBS

Hero Flare
445 FM20, Bastrop TX, 78602
Tel: (512) 772-5744 www.heroflare.com

USER	
JOB SITE	
JOB	

CONTROL PANEL STAND
PIPE STAND MOUNT

DRAWN: NJ	APPR.	JOB NO:	DWG. NO: ACUPS-1A
DATE: 12/11/12	DATE:		REV. S

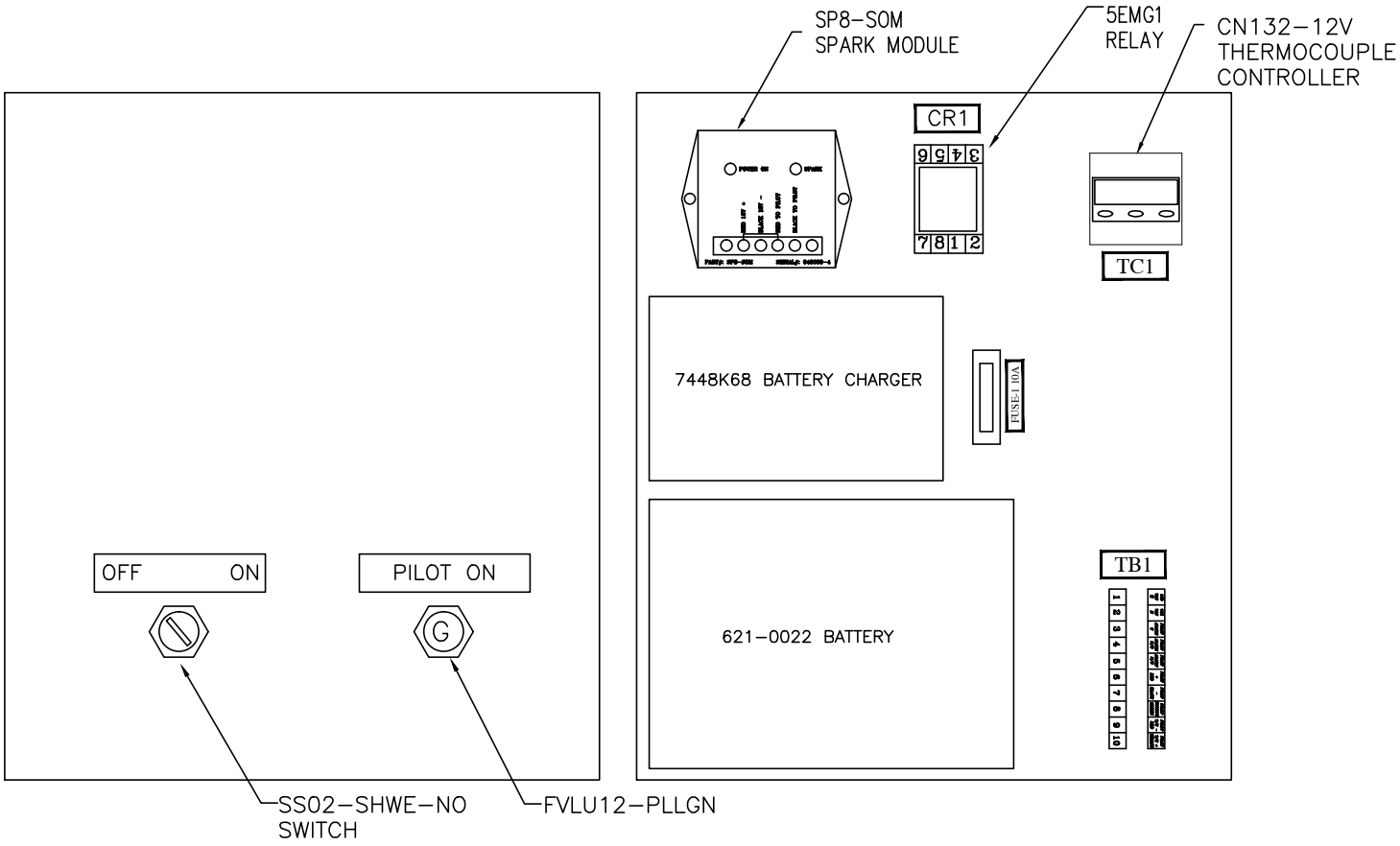

RJ1614HPL NEMA 4X
FIBERGLASS ENCLOSURE

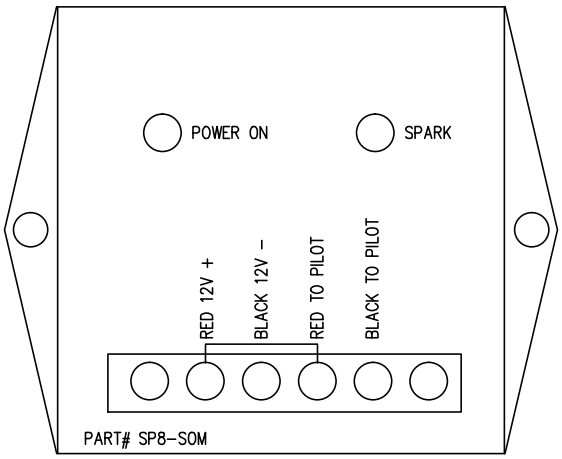

DETAIL OF SPARK MODULE TERMINAL BLOCK

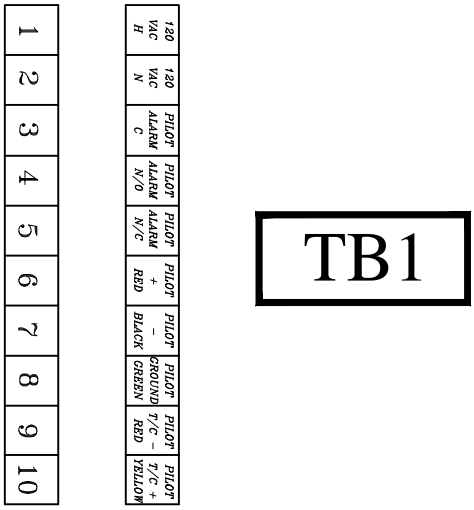

DETAIL OF TB1 TERMINAL STRIP

Hero Flare 445 FM20, Bastrop TX, 78602 Tel: (512) 772-5744 www.heroflare.com	USER		PANEL LAYOUT 120VAC/12VDC		
	JOB SITE				
	JOB				
THE INFORMATION ON THIS DRAWING IS THE PROPERTY OF HERO FLARE. UNAUTHORIZED USE IS FORBIDDEN.	DRAWN: NJ	APPR.	JOB NO:	DWG. NO: ACUPS-2S	REV. 0
	DATE: 5/13/13	DATE:			

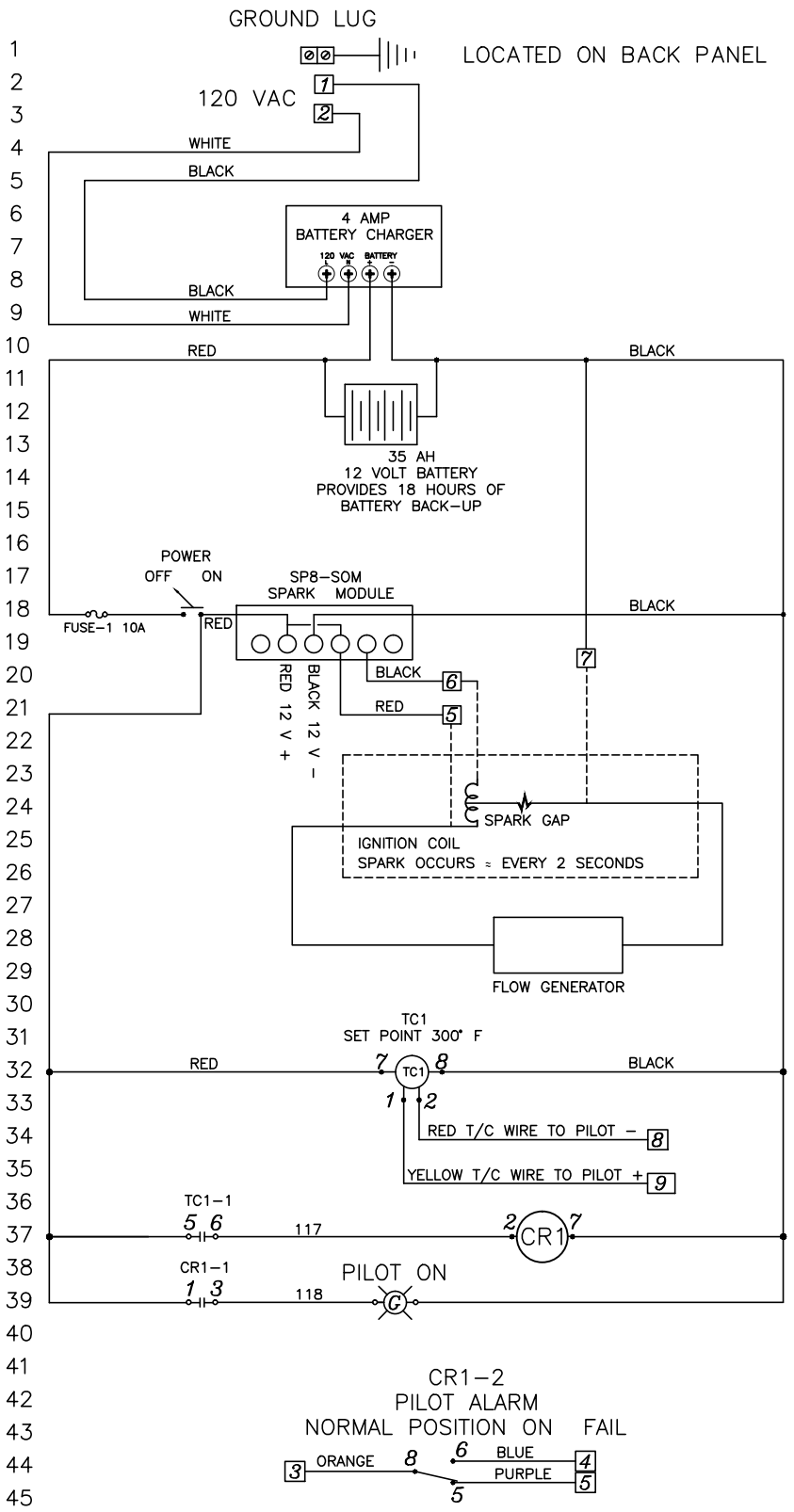

Hero Flare

445 FM20, Bastrop TX, 78602

Tel: (512) 772-5744 www.heroflare.com

USER		SCHEMATIC AC 120V/DC 12V	
JOB SITE			
JOB			
DRAWN: NJ	APPR.	JOB NO:	DWG. NO: ACUPS-3S
DATE: 5/13/13	DATE:		REV. 0

TABLE OF CONTENTS

I. PRODUCT DESCRIPTION

A. Design Features

This 40’ Utility Flare System is designed to provide operators with a safe and reliable method of flaring waste gas produced from biogas and landfill operations.

The following features are incorporated in the 40’ Utility Flare System:

- 4” x 30’ Flare
- 150# Inlet Flange
- 304 SS Tip and CS Stack
- HESFG Spark Igniter with Thermocouple
- Nema 4X Fiberglass 120 vac / 12 vdc Control Panel
- 35 Amp-Hour Battery Providing 1.5 Days of Operation Without Charging.

Specifications	*HESFG Igniter*	*Control Panel*	*Flare*
Weight:	38 lbs.	77 lbs. with Battery	860 lbs
Dimensions:	8’	16” x 14” x 8”	6” x 40’
Voltage:	12 vdc	12 vdc	N/A
Fuel Gas Required:	None (igniter uses flare gas)		

B. Recommended Spare Parts

Item	Part Number
Spark Module	SP8-SOM
12 vdc Battery	621-0022
Thermocouple	4-K-30-U-72-F4-B8
Thermocouple Controller	CN132-12V
Spark Plug	SP8-J99
Ignition Coil Assembly	SP8-MSD8203
Igniter Nozzle Assembly	SP8-PNA
Flow Generator	DSI-FG/424

C. Operational Overview

The Operational Overview and Operations Manual are intended to give the owner/operator a general idea of how this equipment operates and is to be used. Operators must already have a strong fundamental knowledge of this type of equipment before proceeding. Please review the drawings and cut sheets included in D*RAWINGS AND CUT SHEETS* at the front of this manual to better understand the following overview and manual.

The HESFG Spark Igniter System is designed to operate 24 hours a day. The igniter pulls flare gas from the flare stack and ignites it at the igniter tip. Ignition of the gas is assured by an intermittent spark in the igniter nozzle every two seconds regardless of the flame temperature. This spark is generated when the spark module (located in the igniter control panel) delivers a 12 vdc pulse to the ignition coil on the igniter, thus creating the spark. The igniter is also equipped with a thermocouple to prove igniter flame. This is accomplished by the thermocouple controller (located in the control panel) sensing the igniter thermocouple temperature.

When the igniter temperature reaches 300° F, a relay is energized to prove ignition to a data logger or other recording instrument. Note that CFR 40, Part 60 requires flare igniter flame to be monitored, which is accomplished by the thermocouple.

D. Contact

For any comments or questions, please contact:

HERO Flare
445 FM20
Bastrop, Texas 78602
Phone: 713 542 0925
Email: sales@heroflare.com
David Giles: David.Giles@heroflare.com
Nolan Johnson: Nolan.Johnson@heroflare.com

II. PLACEMENT

A. Flare

Correct placement of the flare system is important to ensure safe and efficient operation. There are several factors that deserve consideration before an installation sight is chosen.

1. Close to accessible utilities - The flare system will require the following utilities:

    - Thermocouple wires from the control panel.
    - Ignition coil wires from the control panel.

2. Within a safe working distance from personnel and process equipment - Sudden and unexpected release of process gas to the flare can generate a tremendous amount of heat creating a hazardous condition for personnel and process equipment. Please refer to API standards to determine a safe working distance.

B. Control Panel

The following factors deserve consideration before an installation site for the control panel is chosen.

1. Close to accessible utilities - The control panel will require the following utilities:

    - Wiring to the control room to alert operators of igniter failure conditions.

2. The control panel may be mounted up to 1,000’ from the flare.

3. Within a safe working distance from the flare - Sudden and unexpected release of process gas to the flare can generate a tremendous amount of heat creating a hazardous condition for personnel and process equipment. Please refer to API standards to determine a safe working distance.

III. FOUNDATION AND ERECTION

(Please refer to the Drawings in
Section VIII. DRAWINGS AND CUT SHEETS)

A. Flare Foundation

1. The mounting flange on the flare is 4” x 150#. Structural engineering requirements for the flare foundation, anchor bolts and guy wire anchors will vary depending on sight conditions - therefore must be supplied by others. Minimum recommended size for the flare foundation is 5’ x 5’ x 8” thick with 6” wide beams dug around the perimeter 6” – 8” deep all reinforced with rebar.

2. The optional Installation Equipment package eliminates the need for a concrete foundation and deadmen. The flare can be placed on stabilized fill or chat. Spearhead ground anchors are driven into the soil to hold the guy wires.

B. Flare Erection

1. The flare has been shipped with the HESFG Spark Igniter mounted and is ready for erection.

2. Using standard lifting practices erect the flare and torque the anchor bolts as recommended by the bolt manufacturer. Do not allow the lifting straps to be placed around the HESFG Spark Igniter. If the 1” pipe on the igniter is bent, the igniter will not function properly.

3. Attach the flare to existing concrete structure. Plumb the flare.

IV. INSTALLATION

(Please refer to the Drawings
At the front of this manual DRAWINGS AND CUT SHEETS)

A. Wiring

1. Provide the following circuits:

   a. 120 vac 5-amp circuit for the control panel.

   b. Ignition coil wires (3 conductors, 14 ga, Red, Black and Green) from the control panel to the base of the flare.

   b. 1 pair of type K thermocouple wires (16 ga) from the control panel to the base of the flare.

   c. Alarm wires (2 conductors) from the control panel to the Control Room (if applicable).

2. Using standard wiring practices:

   a. Run conduit and pull wire as described above from the control panel to the base of the flare. A junction box must be supplied at the base of the flare to make wire terminations. Run rigid or flexible conduit from the ¾" conduit connection provided with the flare to the junction box at the base of the flare.

   b. Run conduit and pull wire as described above from the control panel to the Control Room (if applicable).

   c. In the control panel, terminate the red ignition coil wire (+) to TB1-5, the black ignition coil wire (-) to TB1-6, the green ignition coil wire (ground) to TB1-7, the red T/C wire (-) to TB1-8 and the yellow T/C wire (+) to TB1-9. Terminate the ignition coil wires and thermocouple wires in the junction box at the base of the flare. (Red to Red, Black to Black, Green to Green, Red T/C to Red T/C, and Yellow T/C to Yellow T/C).

   d. Terminate the thermocouple alarm wires in the control panel to TB1-3 and TB1-4. Note that the dry contacts for the alarm will be open on thermocouple fail (if applicable).

B. Piping

Using standard piping practices:

1. It is strongly recommended that a flame arrestor be installed in the flare line at the flare inlet. HERO Flare can supply a flame arrestor on request.

2. Attach the flare line to the inlet flange / flame arrestor. Note that the flare gas must be dry and free from condensate and other liquids. If liquid in the flare gas stream is expected, a knock out drum or other liquid entrapment device must be provided.

V. OPERATIONS

(Please refer to the Drawings
At the front of this manual DRAWINGS AND CUT SHEETS)

A. Start-Up Procedure

Be certain that all piping and wiring as outlined in *Section IV. A & B. INSTALLATION - Wiring and Piping* is complete.

1. Make certain that the on/off switch on the control panel is turned *OFF*.

2. Begin purging the flare gas line with fuel gas or nitrogen.

   WARNING: It is absolutely imperative that all air is purged from the flare gas line before the igniter is lit. A constant purge of 40 scfh must be supplied at all times.

3. Turn on the control panel. The green power-on LED on the spark module will illuminate. The igniter will begin sparking every 2 seconds as indicated by the red spark LED on the spark module. The LED's may not be easily visible during bright days.

4. Verify that TC1 reads ambient temperature and that the thermocouple alarm is activated (if applicable). Note that when the igniter temperature is below 300ºF the igniter is considered to be extinguished and in alarm condition.

5. Ignition can be verified by observing TC1 and by listening for the sound of combustion. The flame from the igniter may not be visible during daylight hours. After the thermocouple reaches 300°F, verify that thermocouple alarm has cleared indicating that the flare igniter is above 300ºF.

6. Verify that TC1 falls below 300°F and that the thermocouple alarm is activated (if applicable).

7. Repeat steps 4-7.

8. The flare is now ready for service.

VI. MAINTENANCE

A. Periodic Maintenance

Perform the following maintenance procedure on the igniter every three months:

1. Turn off the igniter flare gas supply.

2. Verify that TC1 falls below 300°F and that the igniter alarm is activated (if applicable).

3. Turn on the igniter fuel gas supply.

4. Verify that TC1 reads ambient temperature.

5. After some time, all of the air from the igniter flare gas line will be purged and the igniter will be ignited. Ignition can be verified by observing TC1 and by listening for the sound of combustion. The flame from the igniter may not be visible during daylight hours. After the thermocouple reaches 300°F, verify that thermocouple alarm has cleared indicating that the flare igniter is above 300ºF.

B. Warranty

The HESFG Spark Igniter is thoroughly inspected and tested before leaving our manufacturing facility. Should any trouble develop, please consult *Section VII. A. TROUBLESHOOTING - Problem Solving.* If the problem cannot be fixed, please contact HERO Flare.

HERO Flare will warranty the SP8-PTC Spark Igniter for a period of one year from the installation date indicated below, if the inspection shows the trouble is caused by defective workmanship or material. Should the unit need to be shipped, please send it to:

HERO Flare
445 FM 20
Bastrop, Texas 78602

This warranty does not apply where: (1) repairs or attempted repairs have been made by persons other than HERO FLARE personnel or Authorized Service personnel; (2) repairs are required because of normal wear; (3) the unit has been abused or involved in an accident; (4) misuse is evident, such as excessive heat due to incorrect installation; (5) incorrect fuel gas or fuel gas pressure has been used; (6) the unit has been used with an improper accessory; or (7) the flare and/or fuel gas has been subject to liquid or solid particulates.

No other warranty written or verbal, is authorized.

VII. TROUBLESHOOTING

The HESFG Spark Igniter is manufactured using the highest quality parts available. It is then thoroughly tested at the factory before shipment, and should provide years of trouble free service if the maintenance procedure in *Section IV. A. MAINTENANCE - Periodic Maintenance* is followed. If any malfunction should occur, investigate the following:

(Please refer to the Drawings
At the front of this manual DRAWINGS AND CUT SHEETS)

A. Problem Solving

1. HESFG Igniter

Igniter will not light.

Check the following:

a. Verify 12 vdc power to the control panel.

b. Observe the red and green LED's on the Spark Module . The green power-on LED should be illuminated at all times. The red spark LED should flash every 2 seconds. The LED's may not be easily visible during bright days.

If the LED's are not working then:

1) Check for 12 vdc at the battery in the control panel.

If 12 vdc is not indicated,

a) Check Fuse-1 10A

b) Check the power output of the Solar Panel

c) Replace the battery and Solar Panel as required.

If 12 vdc is indicated,

a) Check for 12 vdc to the spark module from the switch contact block.

If 12 vdc is not indicated,
(1) Turn off the control panel.

(2) Replace the igniter switch contact block.

If 12 vdc is indicated,

(1) Replace the Spark Module.

If the LED's are working then:

1) Verify correct gas supply to the igniter.

2) Replace the spark module.

If the above troubleshooting procedures have been performed but the ignitor will still not light:

1) Turn off the fuel gas supply.

   WARNING: Be certain that the flare is inactive, blind and purged with nitrogen until all hydrocarbon compounds are removed, before performing any work at the tip of the flare. Use respiration equipment as required.

2) Obtain access to the tip of the flare.

3) Disconnect the thermocouple wires, ignition coil wires and fuel gas supply from the igniter. Remove the u-bolts that attach the igniter to the flare and bring the igniter to grade.

4) Take the igniter to a safe working area. Using temporary piping and wiring, reconnect the thermocouple wires, ignition coil wires and fuel gas supply to the igniter.

5) Verify that the area is free of hydrocarbon gas using an LEL meter or similar hydrocarbon indicator.

6) Turn on the control panel.

7) Look in the center hole at the top of the igniter nozzle for a spark every 2 seconds.

If there is a spark,

a) Turn off the control panel.

b) Remove the gas hose from the flare.
c) Verify the flow of gas to the igniter nozzle and igniter ignition.

d) Re-mount the igniter as outlined in *Section V. C. TROUBLESHOOTING - Igniter Re-Mounting.*

If there is no spark,

a) Turn off the control panel.

b) Remove the high voltage junction box cover.

c) Remove the 7 mm high voltage cable.

d) Place and secure the 7 mm high voltage cable 1/8” from a known ground.

e) Turn on the control panel.

f) Check for a spark between the 7 mm high voltage cable and ground.

If there is a spark,

(1) Replace the spark plug as outlined in *Section V. B. TROUBLESHOOTING - Repairs.*

If there is no spark,

(1) Turn off the control panel.

(2) Replace the ignition coil assembly.

(3) Place and secure the 7 mm high voltage cable 1/8” from a known ground.

(4) Turn on the control panel.
(5) Check for a spark between the 7 mm high voltage cable and ground.

If there is a spark,

(a) Turn off the control panel.

(b) Completely reassemble the igniter.

(c) Re-mount the igniter as outlined in *Section V. C. TROUBLESHOOTING - Igniter Re-Mounting.*

If there is no spark,

(a) Turn off the control panel.

(b) Replace the wiring harness.

(c) Completely reassemble the igniter.

(d) Re-mount the igniter as outlined in *Section V. C. TROUBLESHOOTING - Igniter Re-Mounting*.

Igniter lights but thermocouple controller does not respond.

Check the following:

a. Verify that the red thermocouple wire (negative) is installed on TB1-8 and the yellow thermocouple wire (positive) is installed on TB1-9.

b. Refer to the thermocouple controller manual in *Section VI. DRAWINGS AND CUT SHEETS* to verify that the correct program is entered.

c. Turn off the control panel.

d. Disconnect the thermocouple wires from TB1-8 and TB1-9.

e. Using a spare thermocouple, connect the thermocouple to TB1-8 and TB1-9.

f. Turn on the control panel.

g. Check that the thermocouple controller reads ambient temperature.

If the thermocouple controller does not read ambient temperature then:

1) Replace the thermocouple controller.

2) Reprogram the new thermocouple controller using the data shown in *Section VI. DRAWINGS AND CUT SHEETS.*

If the thermocouple controller reads ambient temperature then:

1) Turn off the control panel.

2) Disconnect the spare thermocouple from TB1-8 and TB1-9.

3) Reconnect the existing thermocouple wires to TB1-8 and TB1-9.

4) Turn off the fuel gas supply.

WARNING: Be certain that the flare is inactive, blind and purged with nitrogen until all hydrocarbon compounds are removed, before performing any work at the tip of the flare. Use respiration equipment as required.

5) Obtain access to the tip of the flare.

6) Disconnect the thermocouple wires from the thermocouple on the igniter. Connect a spare thermocouple to the thermocouple wires.

7) Turn on the control panel.

8) Check that the thermocouple controller reads ambient temperature.

If the thermocouple controller does not read ambient temperature,

a) Turn off the control panel.

b) Disconnect main power from the control panel.

c) Replace the thermocouple wires from the thermocouple to the control panel.

d) Completely reassemble the igniter.

e) Re-start the igniter as outlined in *Section III. E. INSTALLATION - Start-Up Procedure*.

If the thermocouple controller reads ambient temperature,

a) Turn off the control panel.

b) Replace the thermocouple.

c) Completely reassemble the igniter.

d) Re-start the igniter as outlined in *Section III. E. INSTALLTION - Start-Up Procedure*.

B. Repairs

(Please refer to the Drawings
At the front of this manual DRAWINGS AND CUT SHEETS)

1. Spark Plug Replacement

   a. Turn off the igniter fuel gas supply.

   b. Turn off the control panel.

   c. Remove the 7 mm high voltage cable.

   d. Using a pair of needle nose pliers, pull back the high voltage tension spring and release it from the ¼" high voltage rod.

   e. Release the spring.

   f. Remove the igniter shield.

   g. Remove the igniter nozzle assembly.

   h. Unscrew the 1/16" high voltage cable from the spark plug.

   i. Using a standard 13/16" spark plug socket, remove the old spark plug.

   j. Grind a point on the electrode of the new spark plug.

   k. Install the new spark plug.

   l. Reconnect the 1/16" high voltage cable to the new spark plug.

   m. Reinstall the igniter nozzle assembly and igniter shield.

   n. Using a pair of needle nose pliers, pull back the high voltage tension spring.

   o. Reinstall it on the 1/4" high voltage rod.

   p. Turn on the control panel.

   Verify that there is a spark every 2 seconds.

   q. After the spark plug has been replaced and the igniter is working, re-mount the igniter as outlined in *Section V. C. TROUBLESHOOTING - Igniter Re-Mounting.*

C. Igniter Re-Mounting

WARNING: Be certain that the flare is inactive, blind and purged with nitrogen until all hydrocarbon compounds are removed, before performing any work at the tip of the flare. Use respiration equipment as required.

1. Turn off the fuel gas supply.

2. Turn off the control panel.

3. Disconnect all temporary piping and wiring.

4. Obtain access to the tip of the flare.

5. Attach the igniter to the flare, ensuring that the igniter shield is flush with the top of the flare.

6. Reconnect the thermocouple wires, ignition coil wires and fuel gas supply to the igniter.

7. Re-start the igniter as outlined in *Section III. E. INSTALLATION - Start-Up Procedure.*

B. Repairs

(Please refer to the Drawings
in Section VI. DRAWINGS AND CUT SHEETS)

1. Spark Plug Replacement

   a. Turn off the Pilot fuel gas supply.

   b. Turn off the pilot control panel.

   c. Remove the 7 mm high voltage cable.

   d. Remove the air inspirator.

   e. Using a pair of needle nose pliers, pull back the high voltage tension spring and release it from the ¼” high voltage rod.

   f. Release the spring.

   g. Remove the pilot shield.

   h. Remove the pilot nozzle assembly.

   i. Unscrew the 1/16” high voltage cable from the spark plug.

   j. Using a standard 13/16” spark plug socket, remove the old spark plug.

   k. Grind a point on the electrode of the new spark plug.

   l. Install the new spark plug.

   m. Reconnect the 1/16” high voltage cable to the new spark plug.

   n. Reinstall the pilot nozzle assembly and pilot shield.

   o. Using a pair of needle nose pliers, pull back the high voltage tension spring.

   p. Reinstall it on the 1/4” high voltage rod.

   q. Turn on the pilot control panel.

r. Verify that there is a spark every 2 seconds. This can be done by looking in the center hole at the top of the pilot nozzle.

s. After the spark plug has been replaced and the pilot is working, re-mount the pilot as outlined in *Section V. C. TROUBLESHOOTING - Pilot Re-Mounting.*

C. Pilot Re-Mounting

WARNING: Be certain that the flare is inactive, blind and purged with nitrogen until all hydrocarbon compounds are removed, before performing any work at the tip of the flare. Use respiration equipment as required.

1. Turn off the Pilot fuel gas supply.

2. Turn off the pilot control panel.

3. Disconnect all temporary piping and wiring.

4. Obtain access to the tip of the flare.

5. Attach the pilot to the flare, ensuring that the pilot shield is flush with the top of the flare.

6. Reconnect the thermocouple wires, ignition coil wires and fuel gas supply to the pilot.

7. Re-start the pilot as outlined in *Section III. E. INSTALLATION - Start-Up Procedure.*

HERO Flare

Quality flares that work every time.

OPERATION AND INSTALLATION MANUAL

Retractable Pilot System

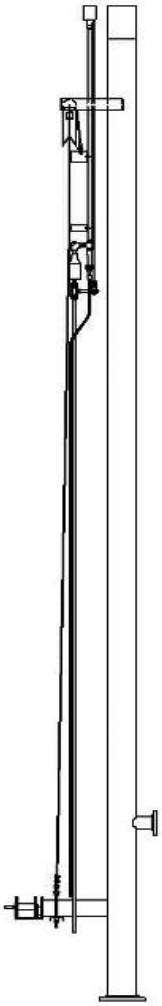

Rev 0 4/8/2013

ITEM#	QTY	DESCRIPTION (PER PILOT)
1	1	WINCH MOUNTING BRACKET
2	1	PILOT RECEIVER ASSEMBLY
3	1	BOTTOM PILOT CARRIAGE
4	1	TOP PILOT CARRIAGE
5	3	U–BOLT, 1"ø x 3/8"
6	1	STAB BRACKET
7	AR	FLEXIBLE CONDUIT, 3/4"
8	AR	FUELGAS, 3/8" SS FLEXHOSE
9	AR	GUIDE CABLE
10	AR	DRAW CABLE
11	1	PULLEY
12	1	MANUAL WINCH
13	AR	CLIPS FOR TUBING & CONDUIT

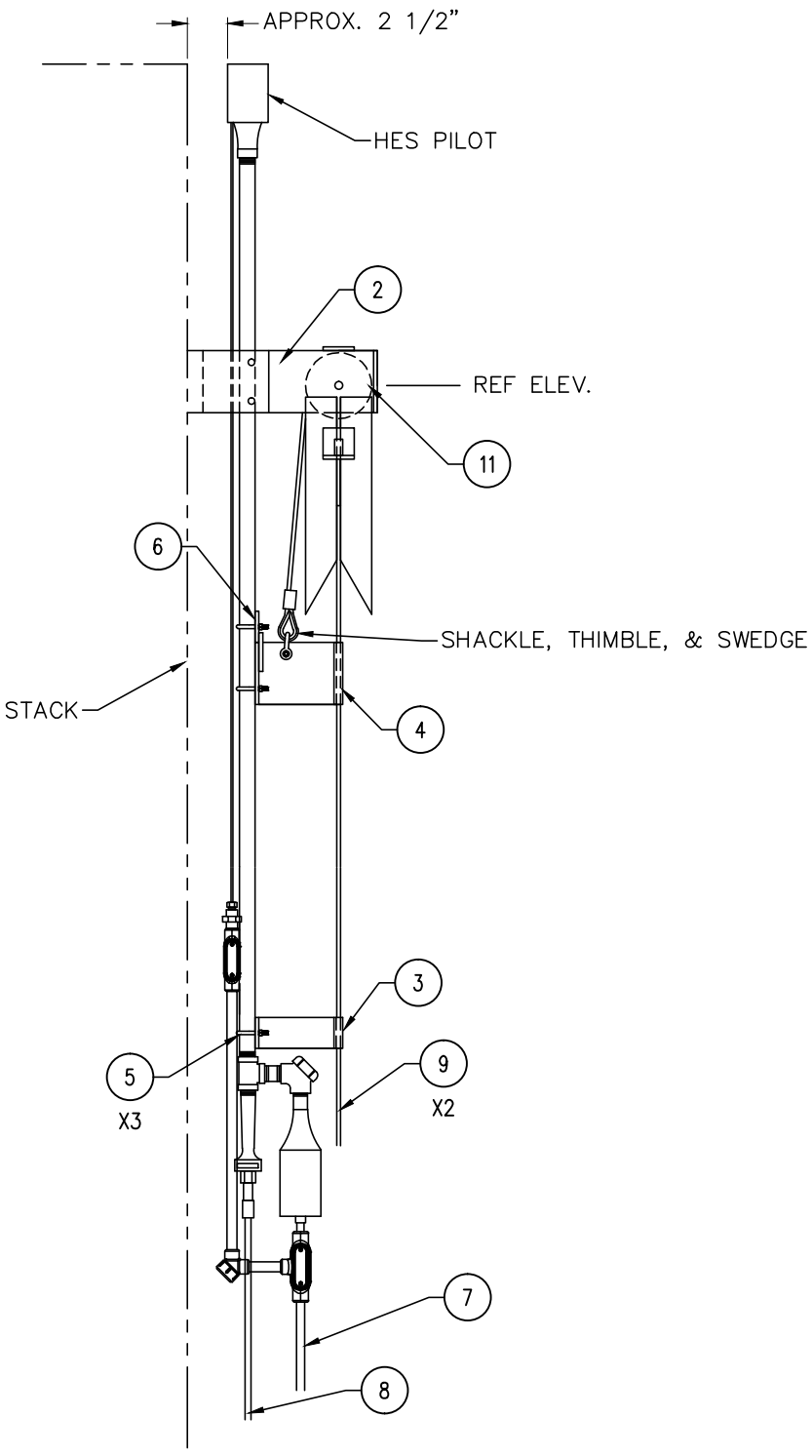

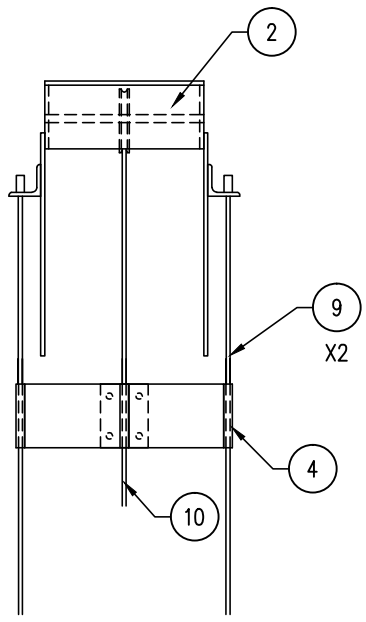

PILOT NOT SHOWN IN THIS VIEW FOR CLARITY

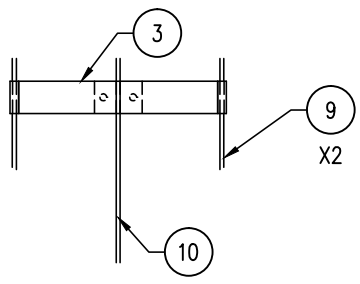

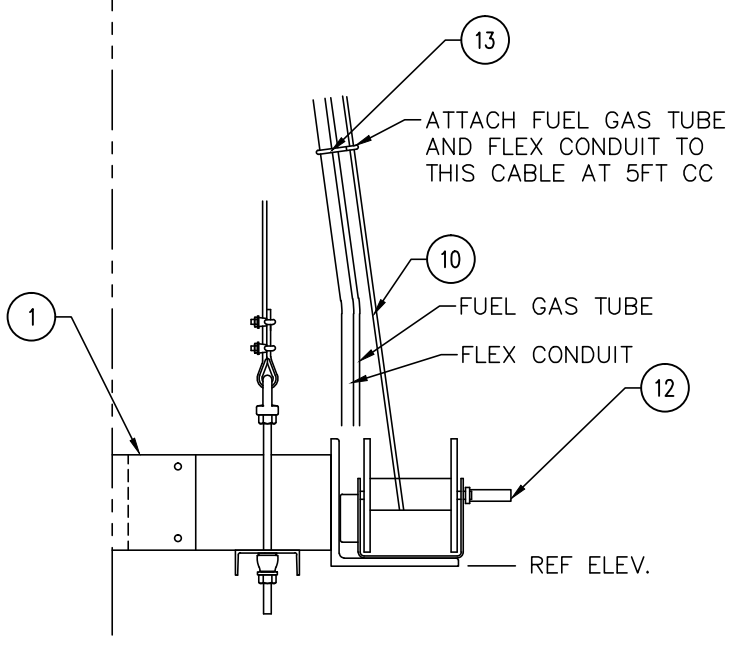

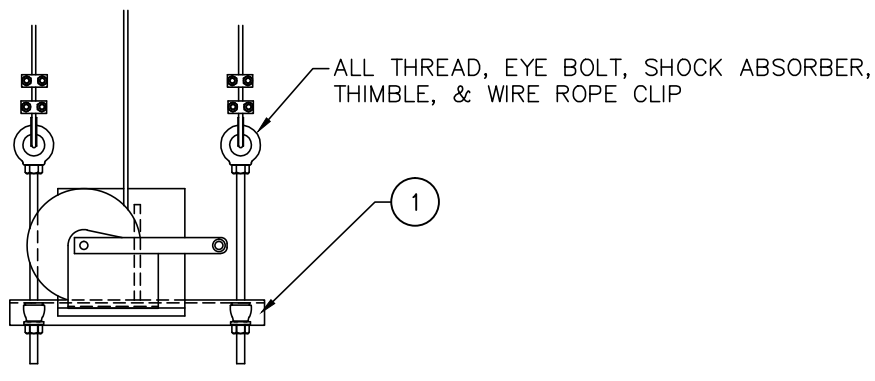

FRONT VIEW

Hero Flare
445 FM20, Bastrop, TX 78602
Tel: (512) 772–5744 www.heroflare.com

USER	
JOB SITE	
JOB	

RS–1
RETRACTABLE SYSTEM FOR PILOT

DRAWN: NJ	APPR.	JOB NO:	DWG. NO: RS–1 GA	REV. S
DATE: 4/24/13	DATE:			

TABLE OF CONTENTS

I. PRODUCT DESCRIPTION

A. Design Features

For convenient maintenance of the pilots, thermocouples, and sparkers, the HES Pilot is mounted on a retractable pulley system. Each retractable system includes two guide cables, a draw cable, a manual winch, and a pulley to raise/lower the HES pilot. The piping is flexible braided hose gas line and the conduit is a flexible braided conduit with wiring.

B. Safety Considerations

- It is acceptable to lower one pilot while the flare is in "standby" service. If so equipped the second pilot **MUST** remain lit at all times.
- If the flare has only one pilot the flare must be removed from service before the pilot can be lowered.
- **NEVER** operate the flare without at least one operating pilot at the top of the flare.
- It is always recommended that while performing maintenance on the flare or flare ignition system that the flare be inactive and blind. If it is not possible or feasible to deactivate the flare for maintenance, caution must be exercised while working at the base of the flare. Sudden and unexpected release of process gas to the flare can generate a tremendous amount of heat, creating a hazardous condition for personnel and process equipment.

C. Component Identification

The drawings and pictures in the "DRAWINGS AND CUT SHEETS" section at the front of this manual identify the key components of the retractable system.

D. Operational Overview

The Owner's Manual and this Operational Overview are intended to give the owner/operator a general idea of how this equipment operates and is to be used. Operators must already have a strong fundamental knowledge of this type of equipment before proceeding.

- To raise the pilot use a 13/16" deep socket and drill to wind the draw cable and lift the HES pilot within approximately 12" of the pilot receiver assembly.
- Use the hand crank and slowly crank the winch until the HES pilot is in position and the draw cable is reasonably tight. **Do Not** over tighten.
- To lower the pilot, reverse the process.
- See section II. INSTALLATION for directions on connecting and disconnecting the HES Pilot.

E. Contacts

Hero Flare
445 FM20
Bastrop, TX 78602
Phone/Fax: 512-772-5744
E-mail: david.giles@heroflare.com

II. INSTALLATION

INSTALLATION

- Before the flare is raised into position, make certain that the draw and guide cables have been installed as shown in the picture above. Note that the “dead end” of the draw cable must be threaded around the pulley from the inside (or closest to the flare). Pull the draw cable until the dead end meets the thimble on the other end and secure them to the base of the flare. This will eliminate the possibility of the draw cable “unthreading” itself when the flare is vertical.
- Once the flare is in position and securely bolted, bolt on the winch plate and winch using the hardware provided.
- Thread the upper and lower pilot carriages onto each of the guide cables as shown in The pictures in the DRAWINGS AND CUT SHEETS section.
- Using the shackle provided, connect the draw cable to the upper pilot carriage (use the hole closest to the pilot).
- Install the eyebolts to the winch mounting plate using the shock absorber, washers and nuts provided. Thread the nut to where there are 2-3 threads showing. This will allow for maximum tension adjustment of the guide cables
- Using the thimble and cable clips provided, attach the guide cables to the eye bolts. pull the slack out of the guide cables before tightening the cable clips.
- Tighten the eyebolt nuts until all of the slack is out of the guide cables and they are reasonably tight.
- Thread the “dead end” of the draw cable into the winch clamp and secure.
- Using a 13/16” deep socket and drill, begin winding the draw cable onto the winch drum until all of the slack is out of the draw cable and the top pilot carriage begins to move up.
- Locate and unpack the HES pilot and unroll the SS braided conduit and fuel gas lines.
- The HES pilot will have the stab bracket already mounted on the pilot at the correct elevation (32” from the top of the bracket to the pilot shield). This bracket is designed to make mounting the pilot onto the top carriage easy and at the right elevation.
- Lift the pilot into position and “hook” the stab bracket to the top pilot carriage. Using the U-bolt provided, secure the pilot to the top pilot carriage U-bolt holes.
- Continue raising the pilot with the winch until the lower end of the pilot is at a working elevation.
- Using the U-bolt provided secure the pilot to the bottom pilot carriage. The bracket should be positioned at about 70” from the top of the pilot shield to the top of the bottom pilot carriage.
- Continue raising the pilot. Connect the SS braided conduit and fuel gas line guide to the draw cable. These guides have been placed approximately every 5ft.

- Once the pilot approaches the pilot receiver assembly, begin using the hand crank for the final 12” of so of travel. This will reduce the possibility of over tightening the draw cable.
- Slowly crank the winch until the pilot is in position and the draw cable reasonably tight. Do not over tighten.
- Connect the SS braided pilot fuel gas line (JIC to ¼” MPT fitting provided) to the fuel gas supply from the pilot control rack provided. Interconnecting fuel gas piping is by others.
- Connect the SS braided conduit (1/2” union provided) to the supplied terminal conduit body.
- Attached the pilot ignition wires and thermocouple wires to the correct terminals (see picture in the DRAWINGS AND CUT SHEETS section).
- Refer to the SOL or ACUPS schematic for wiring to the control enclosure.

Attachment I

EMISSIONS CALCULATIONS

GPUs (S01 - S06)

Pollutant	Emission Factor	Emission Factor Units	Emission Factor Basis / Source	Boiler Rating (MMBtu/hr)	Heat Value of Natural Gas (Btu/scf)	Annual Operating Hours	Max. Hourly Emissions. (lb/hr)	Max. Annual Emissions. (tpy)
VOC's	5.5	$lb/10^6$ scf	AP-42 Chapter 1.4	1.50	1,285	8,760	0.006	0.03
Hexane	1.8	$lb/10^6$ scf	AP-42 Chapter 1.4	1.50	1,285	8,760	0.002	0.009
Formaldehyde	0.075	$lb/10^6$ scf	AP-42 Chapter 1.4	1.50	1,285	8,760	<0.001	<0.001
Benzene	0.0021	$lb/10^6$ scf	AP-42 Chapter 1.4	1.50	1,285	8,760	<0.001	<0.001
Toluene	0.0034	$lb/10^6$ scf	AP-42 Chapter 1.4	1.50	1,285	8,760	<0.001	<0.001
Pb	0.0005	$lb/10^6$ scf	AP-42 Chapter 1.4	1.50	1,285	8,760	<0.001	<0.001
CO	84	$lb/10^6$ scf	AP-42 Chapter 1.4	1.50	1,285	8,760	0.10	0.43
NOx	100	$lb/10^6$ scf	AP-42 Chapter 1.4	1.50	1,285	8,760	0.12	0.51
PM_{10}	7.6	$lb/10^6$ scf	AP-42 Chapter 1.4	1.50	1,285	8,760	0.009	0.04
SO_2	0.6	$lb/10^6$ scf	AP-42 Chapter 1.4	1.50	1,285	8,760	<0.001	0.003
CO_2	53.06	kg CO_2 / MMBtu	40 CFR Subpart C	1.50	1,285	8,760	175.47	768.54
CH_4	0.001	kg CH_4 / MMBtu	40 CFR Subpart C	1.50	1,285	8,760	0.003	0.01
N_2O	0.0001	kg N_2O / MMBtu	40 CFR Subpart C	1.50	1,285	8,760	<0.001	0.001
Total HAPs							0.002	0.010
Total CO_2e							175.65	769.33

Notes:

- Emission rates displayed above represent the maximum hourly and maximum annual emissions for one line heater. Cumulative emission rates for all GPUs are diplayed in the Total Site Emissions Table.
- Greenhouse Gas Emissions are calculated using 40 CFR 98 Subpart C Table C-1 and C-2 emission factors.
- AP-42, Chapter 1.4 references are from the July 1998 revision.
- Max. Annual Emissions based upon Max. Hourly Emissions @ 8760 hr/yr.
- CO_2 equivalency solved for using Global Warming Potentials found in 40CFR98 Table A-1 (Updated January 2014). GWP CO_2=1, GWP CH_4=25, GWP N_2O=298

Example Equations:

Max. Hourly Emission Rate **(lb/hr) =** Emission Factor **($lb/10^6$ scf)** ÷ Heating Value of Natural Gas **(Btu/scf)** x Boiler Rating (**MMBtu/hr)**

Condensate Heater (S07 - S08)

Pollutant	Emission Factor	Emission Factor Units	Emission Factor Basis / Source	Boiler Rating (MMBtu/hr)	Heat Value of Natural Gas (Btu/scf)	Annual Operating Hours	Max. Hourly Emissions. (lb/hr)	Max. Annual Emissions. (tpy)
VOC's	5.5	$lb/10^6$ scf	AP-42 Chapter 1.4	0.75	1,285	8,760	0.003	0.01
Hexane	1.8	$lb/10^6$ scf	AP-42 Chapter 1.4	0.75	1,285	8,760	0.001	0.005
Formaldehyde	0.075	$lb/10^6$ scf	AP-42 Chapter 1.4	0.75	1,285	8,760	<0.001	<0.001
Benzene	0.0021	$lb/10^6$ scf	AP-42 Chapter 1.4	0.75	1,285	8,760	<0.001	<0.001
Toluene	0.0034	$lb/10^6$ scf	AP-42 Chapter 1.4	0.75	1,285	8,760	<0.001	<0.001
Pb	0.0005	$lb/10^6$ scf	AP-42 Chapter 1.4	0.75	1,285	8,760	<0.001	<0.001
CO	84	$lb/10^6$ scf	AP-42 Chapter 1.4	0.75	1,285	8,760	0.05	0.21
NOx	100	$lb/10^6$ scf	AP-42 Chapter 1.4	0.75	1,285	8,760	0.06	0.26
PM_{10}	7.6	$lb/10^6$ scf	AP-42 Chapter 1.4	0.75	1,285	8,760	0.004	0.02
SO_2	0.6	$lb/10^6$ scf	AP-42 Chapter 1.4	0.75	1,285	8,760	<0.001	0.002
CO_2	53.06	kg CO_2 / MMBtu	40 CFR Subpart C	0.75	1,285	8,760	87.73	384.27
CH_4	0.001	kg CH_4 / MMBtu	40 CFR Subpart C	0.75	1,285	8,760	0.002	0.01
N_2O	0.0001	kg N_2O / MMBtu	40 CFR Subpart C	0.75	1,285	8,760	<0.001	<0.001
Total HAPs							0.001	0.005
Total CO_2e							87.82	384.67

Notes:

-Emission rates displayed above represent the max. hourly and max. annual emissions for one line heater. Cumulative emission rates for all heaters are diplayed in the Total

-Greenhouse Gas Emissions are calculated using 40 CFR 98 Subpart C Table C-1 and C-2 emission factors.

-AP-42, Chapter 1.4 references are from the July 1998 revision.

˜Max. Annual Emissions based upon Max. Hourly Emissions @ 8760 hr/yr.

-CO_2 equivalency solved for using Global Warming Potentials found in 40CFR98 Table A-1 (Updated January 2014). GWP CO_2=1, GWP CH_4=25, GWP N_2O=298

Example Equations:

Max. Hourly Emission Rate **(lb/hr) =** Emission Factor **($lb/10^6$ scf)** ÷ Heating Value of Natural Gas **(Btu/scf)** x Boiler Rating (**MMBtu/hr)**

Condensate Tanks (S09 & S10)

Pollutant	Max. Hourly Emissions using E&P Tanks (lb/hr)	Max. Yearly Emissions using E&P Tanks (tons/yr)
VOCs	2.81	12.30
HAPs	0.06	0.27
Hexane	0.09	0.40
Benzene	0.00	0.00
Toluene	0.00	0.01
Ethylbenzene	0.00	0.00
Xylene	0.00	0.00
CO_2	0.00	0.00
CH_4	0.02	0.08
Total CO_2e	0.48	2.08

Notes:

-Emission rates for Condensate Tanks S09 - S10 were calculated using E&P Tanks software. E&P Tanks software output sheets for the Rush 404 Pad are attached.

-The emission rates displayed above are pre-control device emissions.

-CO_2 equivalency solved for using Global Warming Potentials found in 40CFR98 Table A-1 (Updated January 2014). GWP CO_2=1, GWP CH_4=25, GWP N_2O=298

-For emission calculation purposes, the total throughput for the condensate tanks is modeled as being received through a single tank. The throughput value represents the total throughput for two (2) 178-barrel tanks. Therefore, emission rates represent a total from all condensate tanks located on the well pad. Actual throughput for each tank will vary based on operations.

Produced Water Tanks (S11 - S18)

Pollutant	Max. Hourly Emissions using E&P Tanks (lb/hr)	Max. Yearly Emissions using E&P Tanks (tons/yr)
VOCs	0.85	3.71
HAPs	0.08	0.35
Hexane	0.03	0.12
Benzene	0.00	0.00
Toluene	0.00	0.00
Ethylbenzene	0.00	0.00
Xylene	0.00	0.00
CO_2	0.000	0.000
CH_4	0.006	0.03
Total CO_2e	0.15	0.66

Notes:

-Emission rates for Produced Water Tanks S11 - S18 were calculated using E&P Tanks software. E&P Tanks output sheets for the Rush 404 Pad are attached.

Emissions were calculated using Engineering Estimates to establish input to the E&P Tanks software. Ascent has applied an industry standard assumption that 1% of the produced water realized in the tank will be condensate, based upon imperfect fluid separation. Ascent believes that this is a conservative estimation, since the Rush 404 natural gas production facility utilizes 2 stages of fluid separation.

-The emission rates displayed above are pre-control device emissions.

-CO_2 equivalency solved for using Global Warming Potentials found in 40CFR98 Table A-1 (Updated January 2014). GWP CO_2=1, GWP CH_4=25, GWP N_2O=298

-For emission calculation purposes, the total throughput for all produced water tanks is modeled as being received through a single tank. The throughput value represents the total throughput for all eight (8) 210-barrel tanks. Therefore, emission rates represent a total from all produced water tanks located on the well pad. Actual throughput for each tank will vary based on operations.

Tank Loading Operations (S19 & S20)

Unit ID	Description	S, Saturation Factor	P, psia	MW (lb/lb-mol)	Temperature (°F)	Temperature (°R)	L (lb/Mgal)		Throughput (Mgal/yr)	VOC (tpy)	HAP (tpy)	CO_2 (tpy)	CH_4 (tpy)
S19	Condensate Truck Loading	0.6	8.13	96.24	50	510	11.48		92	0.05	0.00	0.000	0.01
S20	Produced Water Loading	0.6	0.24	18.02	50	510	0.06		2,024	0.01	0.000	0.000	0.001

Total VOC Emissions from Condensate Truck Loading Operations

Pollutant	Max. Hourly Emissions (lb/hr)	Max Annual Emissions (tons/yr)	Vapor Collection Efficiency	Enclosed Combustion Device Combusion Efficiency	Post-Control Max. Hourly Emissions (lb/hr)	Post-Control Max. Annual Emissions (tons/yr)	Max. Hourly Uncaptured Emissions (lb/hr)	Max. Annual Uncaptured Emissions (tons/yr)
VOCs	0.01	0.05	70%	98%	<0.001	<0.001	0.00	0.02
HAPs	<0.001	0.00	70%	98%	<0.001	<0.001	<0.001	<0.001
CO_2	<0.001	<0.001	70%	98%	0.32	1.42	<0.001	<0.001
CH_4	0.00	0.01	70%	98%	<0.001	<0.001	<0.001	0.00
Total CO_2e	0.06	0.27	--	--	0.32	1.42	0.02	0.08

Gas Stream	Mole Fraction
Methane	0.02
Ethane	0.22
Propane	0.08
Butane	0.02
Pentanes	0.00
Hexane	0.00
Carbon Dioxide	0.000

Total Emissions from Produced Water Truck Loading Operations

Pollutant	Max. Hourly Emissions (lb/hr)	Max Annual Emissions (tons/yr)	Vapor Collection Efficiency	Enclosed Combustion Device Combusion Efficiency	Post-Control Max. Hourly Emissions (lb/hr)	Post-Control Max. Annual Emissions (tons/yr)	Max. Hourly Uncaptured Emissions (lb/hr)	Max. Annual Uncaptured Emissions (tons/yr)
VOCs	<0.001	<0.001	70%	98%	<0.001	<0.001	<0.001	<0.001
HAPs	<0.001	0.000	70%	98%	<0.001	<0.001	<0.001	<0.001
CO_2	<0.001	<0.001	70%	98%	0.52	2.26	<0.001	<0.001
CH_4	<0.001	0.001	70%	98%	<0.001	<0.001	<0.001	<0.001
Total CO_2e	0.01	0.03	--	--	0.52	2.26	0.002	0.01

Vent Gas Properties	Mass Flowrate (lb/hr)	Density (lb/ft^3)
Condensate Unloading	0.53	0.10
Produced Unloading	0.85	0.10

Notes:

- Emission rates for liquid unloading operations were calculated using E&P Tanks software. E&P Tanks summary sheets are attached.
- The gas composition for Tank Truck Unloading events is assumed to be similar to the working and breathing losses solved in the E&P Tank simulation.

Enclosed Combustion Devices (S21)

Emissions from Tanks

Input to Enclosed Combustion Device	Pollutant	Pollutant Loading Rate to Enclosed Combustion Device (lbs/hr)	Pollutant Loading Rate to Enclosed Combustion Device (tons/year)	Enclosed Combustion Device Combustion Efficiency	Max. Hourly Emissions (lb/hr)	Max. Annual Emissions (tons/yr)
Condensate Tanks (S09 & S10)	VOCs	2.81	12.30	98%	0.06	0.25
	HAPs	0.06	0.27	98%	0.001	0.01
	Hexane	0.09	0.40	98%	0.002	0.01
	Toluene	0.00	0.01	98%	<0.001	<0.001
	CO_2	<0.001	<0.001	98%	2.52	11.02
	CH_4	0.02	0.08	98%	<0.001	0.00
Produced Water Tanks (S11 - S18)	VOCs	0.85	3.71	98%	0.02	0.07
	HAPs	0.08	0.35	98%	0.002	0.007
	Hexane	0.03	0.12	98%	<0.001	0.002
	Toluene	0.00	0.00	98%	<0.001	<0.001
	CO_2	<0.001	<0.001	98%	0.74	3.23
	CH_4	0.01	0.03	98%	<0.001	<0.001
Truck Loading - (S19) Condensate Loading	VOCs	0.01	0.04	98%	<0.001	<0.001
	HAPs	<0.001	<0.001	98%	<0.001	<0.001
	CO_2	<0.001	<0.001	98%	0.32	1.42
	CH_4	0.00	0.01	98%	<0.001	<0.001
Truck Loading - (S20) Produced Water Loading	VOCs	<0.001	<0.001	98%	<0.001	<0.001
	HAPs	<0.001	<0.001	98%	<0.001	<0.001
	CO_2	<0.001	<0.001	98%	0.40	1.76
	CH_4	<0.001	<0.001	98%	<0.001	<0.001
Totals	VOCs	3.66	16.05	--	0.07	0.32
	HAPs	0.14	0.62	--	0.00	0.01
	CO_2	<0.001	<0.001	--	3.98	17.42
	CH_4	0.03	0.12	--	<0.001	0.00
	CO_2e	0.67	2.95	--	3.99	17.48

Gas Composition of Vent Gas

Gas Stream	Mole Fraction
Methane	0.02
Ethane	0.22
Propane	0.40
Butane	0.23
Pentanes	0.08
Hexane	0.02
Carbon Dioxide	0.000

Vent Gas Properties

Vent Gas Properties	Mass Flow Rate (lb/hr)	Density (lb/ft^3)
Condensate Tank	2.87	0.10
Produced Water Tank	0.85	0.10

Emissions from Pilot Operations

Pollutant	Emission Factor (lb/10^6 scf)	Emission Factors (kg/MMBtu)	Heat Value of Natural Gas (Btu/scf)	Enclosed Ground Flare Pilot Rating (Btu/hr)	Enclosed Ground Flare Burner Rating (Btu/hr)	Pilot Max. Hourly Emissions (lb/yr)	Pilot Max. Hourly Emissions (tons/yr)	Burner Max. Hourly Emissions (lb/hr)	Burner Max. Annual Emissions (tons/hr)	Max. Hourly Emissions (lb/hr)	Max. Annual Emissions (tons/yr)
VOCs	5.5	--	1,285	17,500	20,830,000	<0.001	<0.001	0.09	0.39	0.09	0.39
Hexane	1.8	--	1,285	17,500	20,830,000	<0.001	<0.001	0.03	0.13	0.03	0.13
Formaldehyde	0.075	--	1,285	17,500	20,830,000	<0.001	<0.001	0.001	0.005	0.001	0.005
CO	84	--	1,285	17,500	20,830,000	0.001	0.01	1.36	5.96	1.36	5.97
NO_x	100	--	1,285	17,500	20,830,000	0.001	0.01	1.62	7.10	1.62	7.11
PM_{10}	7.6	--	1,285	17,500	20,830,000	<0.001	<0.001	0.12	0.54	0.12	0.54
SO_2	0.6	--	1,285	17,500	20,830,000	<0.001	<0.001	0.010	0.04	0.010	0.04
CO_2	--	52	1,285	17,500	20,830,000	2.01	8.80	2,191.01	9,596.62	2,193.02	9,605.42
CH_4	--	0.0	1,285	17,500	20,830,000	<0.001	<0.001	0.04	0.18	0.04	0.18
N_2O	--	<0.001	1,285	17,500	20,830,000	<0.001	<0.001	0.004	0.02	0.004	0.02
Total HAPs						<0.001	<0.001	0.03	0.13	0.03	0.13
CO_2e						2.01	8.81	2,193.32	9,606.72	2,195.33	9,615.53

Total Enclosed Combustion Device Emissions

Pollutant	Max. Hourly Emissions (lb/hr)	Max. Annual Emissions (tons/yr)
VOCs	0.16	0.71
HAPs	0.03	0.15
Hexane	0.03	0.14
Toluene	<0.001	<0.001
CO	1.36	5.97
NOx	1.62	7.11
PM_{10}	0.12	0.54
SO_2	0.01	0.04
CO_2	2,197.00	9,622.84
CH_4	0.04	0.19
N_2O	0.004	0.02
CO_2e	2,199.32	9,633.01

Notes:

-Emissions from Enclosed Combustion Device Operations from AP-42, Chapter 1.4 references are from the July 1998 revision.

-Greenhouse Gas Emissions from the Enclosed Combustion Device Pilot and Burner calculated using 40 CFR 98 Subpart C Table C-1 and C-2 emission factors.

-Max. Annual Emissions based upon Max. Hourly Emissions @ 8760 hr/yr.

-CO_2 equivalency solved for using Global Warming Potentials found in 40 CFR 98 Table A-1 (Updated January 2014). GWP CO_2=1, GWP CH_4=25, GWP N_2O=298

Example Calculations:

Emissions from Tanks VOCs (lb/hr) = Amount of Gas sent to Enclosed Combustion Device (lb/hr) x 0.02 = Max. Hourly Emissions (lb/hr)

Emissions from Enclosed Combustion Device Operations (lb/hr) = Emission factor (lb/106 Btu) x Heat Value of Natural Gas (Btu/scf) ÷ 1,000,000 x Enclosed Combustion Device Pilot Gas Usage (mcfd) x 1,000 ÷ 24

Emissions from Enclosed Combustion Device Vapor Destruction CO2 Methodologies shown below sample equation

Emissions from Enclosed Combustion Device Operations CO2 (tons/yr) = ((Enclosed Combustion Device Pilot Gas Usage (mcfd) x 1,000 x 365 x Fraction of Gas Combusted by Enclosed Combustion Device x Mole Fraction of Methane x Number of Carbon Atoms in Methane) + … + (Enclosed Combustion Device Pilot Gas Usage (mcfd) x 1,000 x 365 x Fraction of Gas Combusted by Enclosed Combustion Device x Mole Fraction of Pentanes-plus x Number of Carbon Atoms in Pentanes-plus)) x .0526 (kg/ft3) CO2 x .001 x 1.102 tons/tonnes

$$E_{a,CH4}(un-combusted) = V_a * (1-\eta) * X_{CH4} \qquad \text{(Eq. W-19)}$$

$$E_{a,CO2}(un-combusted) = V_a * X_{CO2} \qquad \text{(Eq. W-20)}$$

$$E_{a,CO2}(combusted) = \sum_{J=1}^{5} (\eta * V_a * Y_j * R_j) \qquad \text{(Eq. W-21)}$$

Where:

Ea,CH4(un-combusted) = Contribution of annual un-combusted CH4 emissions from Enclosed Combustion Device stack in cubic feet, under actual conditions.

Ea,CO2(un-combusted) = Contribution of annual un-combusted CO2 emissions from Enclosed Combustion Device stack in cubic feet, under actual conditions.

Ea,CO2(combusted) = Contribution of annual combusted CO2 emissions from Enclosed Combustion Device stack in cubic feet, under actual conditions.

Va = Volume of gas sent to Enclosed Combustion Device in cubic feet, during the year.

η = Fraction of gas combusted by a burning Enclosed Combustion Device (default is 0.98). For gas sent to an unlit Enclosed Combustion Device, η is zero.

XCH4 = Mole fraction of CH4 in gas to the Enclosed Combustion Device.

XCO2 = Mole fraction of CO2 in gas to the Enclosed Combustion Device.

Y_j = Mole fraction of gas hydrocarbon constituents j (such as methane, ethane, propane, butane, and pentanes-plus).

R_j = Number of carbon atoms in the gas hydrocarbon constituent j: 1 for methane, 2 for ethane, 3 for propane, 4 for butane, and 5 for pentanes plus).

Fugitive Emissions from Unpaved Haul Roads

Constant	Industrial Roads		
	PM	PM-10	PM-2.5
k (lb/VMT)	4.9	1.5	0.15
a	0.7	0.9	0.9
b	0.45	0.45	0.45

where

k		Patricle size multiplier[1]
s	4.8	Silt content of road surface material (%)
p	150	Number of days per year with precipitation

Item Number	Description	Number of Wheels	W Mean Vehicle Weight (tons)	Mean Vehicle Speed (mph)	Miles per Trip	Maximum Trips per Hour	Maximum Trips per Year	Control Device ID Number	Control Efficiency (%)	PM Emissions (lbs/hr)	PM Emissions (tons/yr)	PM-10 Emissions (lbs/hr)	PM-10 Emissions (tons/yr)	PM-2.5 Emissions (lbs/hr)	PM-2.5 Emissions (tons/yr)
1	Liquids Hauling	14	30	10	1.10	1	1,174	NA	NA	4.71	2.76	1.20	0.70	0.12	0.07
2	Employee Vehicles	4	3	10	1.10	1	200	NA	NA	1.67	0.17	0.43	0.04	0.04	0.004
									Totals:	**6.37**	**2.93**	**1.62**	**0.75**	**0.16**	**0.07**

Notes:

[1] - Particle Size Multiplier used from AP-42 13.2.2 - Final Version 11/2006

[2] - Silt Content of Road Surface uses Sand and Gravel Processing Plant Road from AP-42 13.2.2 - Final Version 11/2006

[3] - Number of days per year with precipitation >0.01 in3 found using AP-42 13.2.2 Figure 13.2.2-1 - Final Version 11/2006

Example Calculations:

Emissions (lb/Vehicle Mile Traveled) - $E = k \times (s/12)^a \times (W/3)^b$ Equation 1a from AP-42 13.2.2 - Final Version 11/2006

Size Specific Emissions (lb/VMT) - $E_{ext} = E[(365-p)/365]$ Equation 2 from AP-42 13.2.2 - Final Version 11/2006

Fugitive Leaks

Default Average Component Counts for Major Onshore Natural Gas Production Equipment[1]				
Facility Equipment Type	Valves	Connectors	Open-ended Lines	Pressure Relief Valves
Wellheads	8	38	0.5	0
Separators	1	6	0	0
Meters/Piping	12	45	0	0
Compressors	12	57	0	0
In-line Heaters	14	65	2	1
Dehydrators	24	90	2	2

[1]- Table W-1B to 40CFR98 Subpart W

Well Specific Equipment Counts	
Facility Equipment Type	Count on Site
Wellheads	6
Separators	6
Meters/Piping	6
Compressors	0
In-line Heaters	14
Dehydrators	0

Gas Composition						
	Propane	Butane	Pentanes	Hexane	CO_2	CH_4
Mole %	3.62	1.12	0.28	0.12	0.14	80.73
MW	44.00	58.00	72.00	86.00	44.00	16.00

Fugitive Emissions													
Facility Equipment Type	Total Count	Emission Rate (scf/hr/component)[2]	Hours of Operation	VOCs (lbs/hr)	VOCs (tons/yr)	HAPs (lbs/hr)	HAPs (tons/yr)	CO_2 (lbs/hr)	CO_2 (tons/yr)	CH_4 (lbs/hr)	CH_4 (tons/yr)	Total CO_2e (lbs/hr)	Total CO_2e (tons/yr)
Valves	322	0.027	8760	0.06	0.25	0.002	0.01	0.001	0.006	0.29	1.28	7.28	31.90
Connectors	1444	0.003	8760	0.03	0.13	0.001	0.005	<0.001	0.003	0.15	0.64	3.63	15.90
Open-ended Lines	31	0.06	8760	0.01	0.05	<0.001	0.002	<0.001	0.001	0.06	0.28	1.58	6.94
Pressure Relief Valves	14	0.04	8760	0.004	0.016	<0.001	<0.001	<0.001	<0.001	0.02	0.08	0.47	2.05
			Total Emissions:	**0.10**	**0.45**	**0.004**	**0.02**	**0.002**	**0.01**	**0.52**	**2.27**	**12.97**	**56.79**

[2]- Table W-1A to 40CFR98 Subpart W

Example Equations:

Fugitive Emissions (lb/hr) = Count x Emission Rate x Hours of Operation ÷ 385.5 scf/lbmol x mol VOC's

Total Rush 404 Site Emission Levels

	VOCs		HAPs		CO		NO_x		PM		SO_2		CO_2		CH_4		N_2O		CO_2e	
Emission Sources	**lb/hr**	**tons/yr**	**lb/hr**	**tons/yr**	**lb/hr**	**tons/yr**	**lb/hr**	**tons/yr**	**lb/hr**	**tons/yr**	**lb/hr**	**tons/yr**	**lb/hr**	**tons/yr**	**lb/hr**	**tons/yr**	**lb/hr**	**tons/yr**	**lb/hr**	**tons/yr**
GPU (S01)	0.006	0.03	0.002	0.01	0.10	0.43	0.12	0.51	0.009	0.04	<0.001	0.003	175.47	768.54	0.003	0.01	<0.001	0.001	175.65	769.33
GPU (S02)	0.006	0.03	0.002	0.01	0.10	0.43	0.12	0.51	0.009	0.04	<0.001	0.003	175.47	768.54	0.003	0.01	<0.001	0.001	175.65	769.33
GPU (S03)	0.006	0.03	0.002	0.01	0.10	0.43	0.12	0.51	0.009	0.04	<0.001	0.003	175.47	768.54	0.003	0.01	<0.001	0.001	175.65	769.33
GPU (S04)	0.006	0.03	0.002	0.01	0.10	0.43	0.12	0.51	0.009	0.04	<0.001	0.003	175.47	768.54	0.003	0.01	<0.001	0.001	175.65	769.33
GPU (S05)	0.006	0.03	0.002	0.01	0.10	0.43	0.12	0.51	0.009	0.04	<0.001	0.003	175.47	768.54	0.003	0.01	<0.001	0.001	175.65	769.33
GPU (S06)	0.006	0.03	0.002	0.01	0.10	0.43	0.12	0.51	0.009	0.04	<0.001	0.003	175.47	768.54	0.003	0.01	<0.001	0.001	175.65	769.33
Condensate Heater (S07)	0.003	0.01	0.001	0.00	0.05	0.21	0.06	0.26	0.004	0.02	<0.001	0.002	87.73	384.27	0.002	0.01	<0.001	<0.001	87.82	384.67
Condensate Heater (S08)	0.003	0.01	0.001	0.00	0.05	0.21	0.06	0.26	0.004	0.02	<0.001	0.002	87.73	384.27	0.002	0.01	<0.001	<0.001	87.82	384.67
Enclosed Vapor Combustor (S21)	0.16	0.71	0.03	0.15	1.36	5.97	1.62	7.11	0.12	0.54	0.010	0.04	2,197.00	9,622.84	0.04	0.19	0.004	0.018	2,199.32	9,633.01
Liquid Unloading - Condensate (S19)	0.00	0.02	<0.001	<0.001	--	--	--	--	--	--	--	--	<0.001	<0.001	<0.001	0.00	--	--	0.02	0.08
Liquid Unloading - Produced Water (S20)	<0.001	<0.001	<0.001	<0.001	--	--	--	--	--	--	--	--	<0.001	<0.001	0.000	<0.001	--	--	0.002	0.01
Haul Roads	--	--	--	--	--	--	--	--	6.37	2.93	--	--	--	--	--	--	--	--	--	--
Fugitives Leaks	0.10	0.45	0.004	0.02	--	--	--	--	--	--	--	--	0.002	0.011	0.52	2.27	--	--	12.97	56.79
Totals	**0.31**	**1.37**	**0.05**	**0.23**	**2.05**	**8.98**	**2.44**	**10.68**	**6.56**	**3.74**	**0.01**	**0.06**	**3,425.26**	**15,002.63**	**0.58**	**2.56**	**0.00**	**0.03**	**3,441.83**	**15,075.22**

Total Rush 404 Site Emission Levels - HAP Speciation

	Total HAPs		Hexane		Benzene		Toluene		Ethylbenzene		Xylene	
Emission Sources	**lb/hr**	**tons/yr**	**lb/hr**	**tons/yr**	**lb/hr**	**tons/yr**	**lb/hr**	**tons/yr**	**lb/hr**	**tons/yr**	**lb/hr**	**tons/yr**
GPU (S01)	<0.01	0.01	<0.01	0.01	<0.01	<0.01	<0.01	<0.01	<0.01	<0.01	<0.01	<0.01
GPU (S02)	<0.01	0.01	<0.01	0.01	<0.01	<0.01	<0.01	<0.01	<0.01	<0.01	<0.01	<0.01
GPU (S03)	<0.01	0.01	<0.01	0.01	<0.01	<0.01	<0.01	<0.01	<0.01	<0.01	<0.01	<0.01
GPU (S04)	<0.01	0.01	<0.01	0.01	<0.01	<0.01	<0.01	<0.01	<0.01	<0.01	<0.01	<0.01
GPU (S05)	<0.01	0.01	<0.01	0.01	<0.01	<0.01	<0.01	<0.01	<0.01	<0.01	<0.01	<0.01
GPU (S06)	<0.01	0.01	<0.01	0.01	<0.01	<0.01	<0.01	<0.01	<0.01	<0.01	<0.01	<0.01
Condensate Heater (S07)	<0.01	0.005	<0.01	0.005	<0.01	<0.01	<0.01	<0.01	<0.01	<0.01	<0.01	<0.01
Condensate Heater (S08)	<0.01	0.005	<0.01	0.005	<0.01	<0.01	<0.01	<0.01	<0.01	<0.01	<0.01	<0.01
Enclosed Vapor Combustor (S21)	0.03	0.15	0.03	0.14	<0.01	<0.01	<0.01	<0.01	<0.01	<0.01	<0.01	<0.01
Liquid Unloading - Condensate (S19)	<0.01	<0.01	<0.01	<0.01	<0.01	<0.01	<0.01	<0.01	<0.01	<0.01	<0.01	<0.01
Liquid Unloading - Produced Water (S20)	<0.01	<0.01	<0.01	<0.01	<0.01	<0.01	<0.01	<0.01	<0.01	<0.01	<0.01	<0.01
Haul Roads	--	--	--	--	--	--	--	--	--	--	--	--
Fugitives Leaks	<0.01	0.01	<0.01	<0.01	<0.01	<0.01	<0.01	<0.01	<0.01	<0.01	<0.01	<0.01
Totals	**0.05**	**0.23**	**0.03**	**0.21**	**<0.01**	**<0.01**	**<0.01**	**<0.01**	**<0.01**	**<0.01**	**<0.01**	**<0.01**

```
*****************************************************************************************
*     Project Setup Information                                                         *
*****************************************************************************************
Project File              : F:\Projects\A\Ascent Resources\0319757 - General Air Services\6.0 Plans and
Reports\Hoyt 401-404 Permit Modifications\Hoyt 404\Attachment I - Hoyt 404 - E&P Tanks - Produced Water.ept
Flowsheet Selection       : Oil Tank with Separator
Calculation Method        : RVP Distillation
Control Efficiency        : 100.0%
Known Separator Stream    : High Pressure Oil
Entering Air Composition  : No

Filed Name                : Hoyt 404
Well Name                 : Produced Water
Date                      : 2015.04.03


*****************************************************************************************
*     Data Input                                                                        *
*****************************************************************************************

Separator Pressure        : 25.00[psig]
Separator Temperature     : 80.00[F]
Ambient Pressure          : 14.70[psia]
Ambient Temperature       : 70.00[F]
C10+ SG                   : 0.7701
C10+ MW                   : 154.702

-- High Pressure Oil ----------------------------------------------------------------------
   No.    Component             mol %
   1      H2S                   0.0000
   2      O2                    0.0000
   3      CO2                   0.0000
   4      N2                    0.0000
   5      C1                    0.1800
   6      C2                    1.9110
   7      C3                    5.8480
   8      i-C4                  2.8650
   9      n-C4                  7.7460
   10     i-C5                  5.8910
   11     n-C5                  6.3200
   12     C6                    9.0620
   13     C7                   21.2950
   14     C8                   15.9000
   15     C9                    4.3170
   16     C10+                  9.0790
   17     Benzene               0.1790
   18     Toluene               1.0490
```

19	E-Benzene	0.1150
20	Xylenes	1.2260
21	n-C6	6.9830
22	224Trimethylp	0.0340

-- Sales Oil ----------

Production Rate : 1.8[bbl/day]
Days of Annual Operation : 365 [days/year]
API Gravity : 73.7
Reid Vapor Pressure : 12.50[psia]

****
* Calculation Results *
****

-- Emission Summary ----------

Item	Uncontrolled [ton/yr]	Uncontrolled [lb/hr]
Total HAPs	0.080	0.018
Page 1---------- E&P TANK		
Total HC	3.715	0.848
VOCs, C2+	3.690	0.842
VOCs, C3+	3.193	0.729

Uncontrolled Recovery Info.

Vapor	159.4500 x1E-3	[MSCFD]
HC Vapor	159.4500 x1E-3	[MSCFD]
GOR	88.58	[SCF/bbl]

-- Emission Composition ----------

No	Component	Uncontrolled [ton/yr]	Uncontrolled [lb/hr]
1	H2S	0.000	0.000
2	O2	0.000	0.000
3	CO2	0.000	0.000
4	N2	0.000	0.000
5	C1	0.025	0.006
6	C2	0.497	0.113
7	C3	1.349	0.308
8	i-C4	0.361	0.082
9	n-C4	0.686	0.157
10	i-C5	0.254	0.058
11	n-C5	0.201	0.046
12	C6	0.121	0.028
13	C7	0.108	0.025
14	C8	0.029	0.007
15	C9	0.003	0.001

16	C10+	0.001	0.000
17	Benzene	0.002	0.000
18	Toluene	0.003	0.001
19	E-Benzene	0.000	0.000
20	Xylenes	0.001	0.000
21	n-C6	0.074	0.017
22	224Trimethylp	0.000	0.000
	Total	3.715	0.848

-- Stream Data ----------

No.	Component	MW	LP Oil mol %	Flash Oil mol %	Sale Oil mol %	Flash Gas mol %	W&S Gas mol %	Total Emissions mol %
1	H2S	34.80	0.0000	0.0000	0.0000	0.0000	0.0000	0.0000
2	O2	32.00	0.0000	0.0000	0.0000	0.0000	0.0000	0.0000
3	CO2	44.01	0.0000	0.0000	0.0000	0.0000	0.0000	0.0000
4	N2	28.01	0.0000	0.0000	0.0000	0.0000	0.0000	0.0000
5	C1	16.04	0.1800	0.0250	0.0000	4.1412	0.4803	2.0526
6	C2	30.07	1.9110	0.9572	0.0255	26.2809	17.9484	21.5272
7	C3	44.10	5.8480	4.7156	2.5811	34.7822	43.6408	39.8361
8	i-C4	58.12	2.8650	2.6807	2.3631	7.5735	8.4733	8.0868
9	n-C4	58.12	7.7460	7.4779	7.0133	14.5965	15.9508	15.3691
10	i-C5	72.15	5.8910	5.9487	6.0166	4.4163	4.7110	4.5844
11	n-C5	72.15	6.3200	6.4308	6.5794	3.4888	3.7207	3.6211
12	C6	86.16	9.0620	9.3459	9.7525	1.8072	1.9320	1.8784
13	C7	100.20	21.2950	22.0741	23.2024	1.3890	1.4981	1.4513
14	C8	114.23	15.9000	16.5097	17.3959	0.3205	0.3496	0.3371
15	C9	128.28	4.3170	4.4848	4.7288	0.0294	0.0345	0.0323
16	C10+	154.70	9.0790	9.4339	9.9506	0.0101	0.0115	0.0109
17	Benzene	78.11	0.1790	0.1850	0.1936	0.0257	0.0276	0.0268
18	Toluene	92.13	1.0490	1.0884	1.1457	0.0414	0.0449	0.0434
19	E-Benzene	106.17	0.1150	0.1194	0.1259	0.0015	0.0016	0.0015
20	Xylenes	106.17	1.2260	1.2735	1.3425	0.0135	0.0149	0.0143
21	n-C6	86.18	6.9830	7.2140	7.5461	1.0805	1.1582	1.1249
22	224Trimethylp	114.24	0.0340	0.0353	0.0371	0.0018	0.0019	0.0018
	MW		92.05	93.82	96.24	46.77	49.60	48.39
	Stream Mole Ratio		1.0000	0.9623	0.9123	0.0377	0.0500	0.0877
	Heating Value	[BTU/SCF]				2655.57	2806.48	2741.67
	Gas Gravity	[Gas/Air]				1.61	1.71	1.67
	Bubble Pt. @ 100F	[psia]	35.59	23.66	13.71			
	RVP @ 100F	[psia]	24.68	18.85	12.48			

Page 2---------- E&P TANK

	Spec. Gravity @ 100F	0.660	0.663	0.667

```
*****************************************************************************************
*     Project Setup Information                                                         *
*****************************************************************************************
Project File              : F:\Projects\A\Ascent Resources\0319757 - General Air Services\6.0 Plans and
Reports\Hoyt 401-404 Permit Modifications\Hoyt 404\Attachment I - Hoyt 404 - E&P Tanks - Condensate.ept
Flowsheet Selection       : Oil Tank with Separator
Calculation Method        : RVP Distillation
Control Efficiency        : 100.0%
Known Separator Stream    : High Pressure Oil
Entering Air Composition  : No

Filed Name                : Hoyt 404
Date                      : 2015.04.03


*****************************************************************************************
*     Data Input                                                                        *
*****************************************************************************************

Separator Pressure        : 25.00[psig]
Separator Temperature     : 80.00[F]
Ambient Pressure          : 14.70[psia]
Ambient Temperature       : 70.00[F]
C10+ SG                   : 0.7701
C10+ MW                   : 154.702

-- High Pressure Oil ----------------------------------------------------------------------
   No.    Component            mol %
   1      H2S                  0.0000
   2      O2                   0.0000
   3      CO2                  0.0000
   4      N2                   0.0000
   5      C1                   0.1800
   6      C2                   1.9110
   7      C3                   5.8480
   8      i-C4                 2.8650
   9      n-C4                 7.7460
   10     i-C5                 5.8910
   11     n-C5                 6.3200
   12     C6                   9.0620
   13     C7                  21.2950
   14     C8                  15.9000
   15     C9                   4.3170
   16     C10+                 9.0790
   17     Benzene              0.1790
   18     Toluene              1.0490
   19     E-Benzene            0.1150
```

20	Xylenes	1.2260
21	n-C6	6.9830
22	224Trimethylp	0.0340

-- Sales Oil ----------

Production Rate : 6[bbl/day]
Days of Annual Operation : 365 [days/year]
API Gravity : 73.7
Reid Vapor Pressure : 12.50[psia]

****
* Calculation Results *
****

-- Emission Summary ----------

Item	Uncontrolled [ton/yr]	Uncontrolled [lb/hr]
Total HAPs	0.270	0.062
Total HC	12.385	2.828
Page 1---------- E&P TANK		
VOCs, C2+	12.300	2.808
VOCs, C3+	10.643	2.430

Uncontrolled Recovery Info.

Vapor	531.5100 x1E-3	[MSCFD]
HC Vapor	531.5100 x1E-3	[MSCFD]
GOR	88.58	[SCF/bbl]

-- Emission Composition ----------

No	Component	Uncontrolled [ton/yr]	Uncontrolled [lb/hr]
1	H2S	0.000	0.000
2	O2	0.000	0.000
3	CO2	0.000	0.000
4	N2	0.000	0.000
5	C1	0.084	0.019
6	C2	1.657	0.378
7	C3	4.496	1.026
8	i-C4	1.203	0.275
9	n-C4	2.286	0.522
10	i-C5	0.847	0.193
11	n-C5	0.669	0.153
12	C6	0.404	0.092
13	C7	0.360	0.082
14	C8	0.096	0.022
15	C9	0.010	0.002
16	C10+	0.004	0.001

17	Benzene	0.005	0.001
18	Toluene	0.010	0.002
19	E-Benzene	0.000	0.000
20	Xylenes	0.004	0.001
21	n-C6	0.248	0.057
22	224Trimethylp	0.001	0.000
	Total	12.384	2.827

-- Stream Data ----------

No.	Component	MW	LP Oil mol %	Flash Oil mol %	Sale Oil mol %	Flash Gas mol %	W&S Gas mol %	Total Emissions mol %
1	H2S	34.80	0.0000	0.0000	0.0000	0.0000	0.0000	0.0000
2	O2	32.00	0.0000	0.0000	0.0000	0.0000	0.0000	0.0000
3	CO2	44.01	0.0000	0.0000	0.0000	0.0000	0.0000	0.0000
4	N2	28.01	0.0000	0.0000	0.0000	0.0000	0.0000	0.0000
5	C1	16.04	0.1800	0.0250	0.0000	4.1412	0.4803	2.0526
6	C2	30.07	1.9110	0.9572	0.0255	26.2809	17.9484	21.5272
7	C3	44.10	5.8480	4.7156	2.5811	34.7822	43.6408	39.8361
8	i-C4	58.12	2.8650	2.6807	2.3631	7.5735	8.4733	8.0868
9	n-C4	58.12	7.7460	7.4779	7.0133	14.5965	15.9508	15.3691
10	i-C5	72.15	5.8910	5.9487	6.0166	4.4163	4.7110	4.5844
11	n-C5	72.15	6.3200	6.4308	6.5794	3.4888	3.7207	3.6211
12	C6	86.16	9.0620	9.3459	9.7525	1.8072	1.9320	1.8784
13	C7	100.20	21.2950	22.0741	23.2024	1.3890	1.4981	1.4513
14	C8	114.23	15.9000	16.5097	17.3959	0.3205	0.3496	0.3371
15	C9	128.28	4.3170	4.4848	4.7288	0.0294	0.0345	0.0323
16	C10+	154.70	9.0790	9.4339	9.9506	0.0101	0.0115	0.0109
17	Benzene	78.11	0.1790	0.1850	0.1936	0.0257	0.0276	0.0268
18	Toluene	92.13	1.0490	1.0884	1.1457	0.0414	0.0449	0.0434
19	E-Benzene	106.17	0.1150	0.1194	0.1259	0.0015	0.0016	0.0015
20	Xylenes	106.17	1.2260	1.2735	1.3425	0.0135	0.0149	0.0143
21	n-C6	86.18	6.9830	7.2140	7.5461	1.0805	1.1582	1.1249
22	224Trimethylp	114.24	0.0340	0.0353	0.0371	0.0018	0.0019	0.0018
	MW		92.05	93.82	96.24	46.77	49.60	48.39
	Stream Mole Ratio		1.0000	0.9623	0.9123	0.0377	0.0500	0.0877
	Heating Value	[BTU/SCF]				2655.57	2806.48	2741.67
	Gas Gravity	[Gas/Air]				1.61	1.71	1.67
	Bubble Pt. @ 100F	[psia]	35.59	23.66	13.71			
	RVP @ 100F	[psia]	24.68	18.85	12.48			
	Spec. Gravity @ 100F		0.660	0.663	0.667			

Page 2---------- E&P TANK

Attachment J

CLASS I LEGAL AD

Attachment J

AIR QUALITY PERMIT NOTICE
Notice of Application

Notice is given that Ascent Resources - Marcellus, LLC has applied to the West Virginia Department of Environmental Protection, Division of Air Quality, for a General Permit for a natural gas production operation located on Hoyt Ridge Road, Wileyville, in Wetzel County, West Virginia. The latitude and longitude coordinates are: 39.61125, -80.63736.

The applicant estimates the potential to discharge the following regulated air pollutants on a facility-wide basis will be:

Volatile Organic Compounds (VOCs) = 1.37 tpy
Hazardous Air Pollutants (HAPs) = 0.23 tpy
Hexane = 0.21 tpy
Carbon Monoxide (CO) = 8.98 tpy
Nitrogen Oxides (NO_x) = 10.68 tpy
Particulate Matter (PM) = 3.74 tpy
Sulfur Dioxide (SO_2) = 0.06 tpy
Carbon Dioxide Equivalents (CO_2e) = 15,075.22 tpy

Written comments will be received by the West Virginia Department of Environmental Protection, Division of Air Quality, 601 57th Street, SE, Charleston, WV 25304, for at least 30 calendar days from the date of publication of this notice.

Any questions regarding this permit application should be directed to the DAQ at (304) 926-0499, extension 1250, during normal business hours.

Dated this the XX day of November, 2015.

By: Ascent Resources- Marcellus, LLC
Tim Cummings
Vice President - Operations
301 NW 63rd Street
Oklahoma City, OK 73116

Attachment K

ELECTRONIC SUBMITTAL

(NOT APPLICABLE)

Attachment L

APPLICATION FEE

Attachment L
G70-A General Permit Application Fee

An application fee of $500 is being submitted by Ascent Resources - Marcellus, LLC with this G70-A General Permit Application.

Attachment M

SITING CRITERIA WAIVER

(NOT APPLICABLE)

Attachment N

SAFETY DATA SHEETS (SDS)

Natural Gas Liquids

Safety Data Sheet

Section 1: Identification of the substance or mixture and of the supplier

Product Name:	Natural Gas Liquids
SDS Number:	786340
Synonyms/Other Means of Identification:	Natural Gas Liquids, Raw Natural Gas Liquids, Ethane Free Plant Condensate Raw NGL EPBC Mix PBC Mix Y-Grade Gas Liquids
MARPOL Annex I Category:	Naphthas and Condensates
Intended Use:	Feedstock
Manufacturer:	American Energy Partners 301 N.W. 63rd Oklahoma City, OK 73116
Emergency Health and Safety Number:	Chemtrec: 800-424-9300 (24 Hours)
SDS Information:	Phone: 844-210-6000 URL: www.americanenergypartners.com

Section 2: Hazard(s) Identification

Classification

H224 -- Flammable liquids -- Category 1
H315 -- Skin corrosion/irritation -- Category 2
H304 -- Aspiration Hazard -- Category 1
H336 -- Specific target organ toxicity (single exposure) -- Category 3
H350 -- Carcinogenicity -- Category 1B
H411 -- Hazardous to the aquatic environment, chronic toxicity -- Category 2

Hazards not Otherwise Classified

May contain or release poisonous hydrogen sulfide gas

Label Elements

DANGER

Extremely flammable liquid and vapor. (H224)*
Causes skin irritation. (H315)*
May contain or release poisonous hydrogen sulfide gas
May be fatal if swallowed and enters airways. (H304)*
May cause drowsiness or dizziness. (H336)*
May cause cancer. (H350)*
Toxic to aquatic life with long lasting effects. (H411)*

Precautionary Statement(s):
Obtain special instructions before use. (P201)*
Do not handle until all safety precautions have been read and understood. (P202)*
Keep away from heat/sparks/open flames/hot surfaces. - No smoking. (P210)*
Keep container tightly closed. (P233)*
Ground/bond container and receiving equipment. (P240)*
Use with explosion-proof equipment. (P241)*
Use only non-sparking tools. (P242)*
Take precautionary measures against static discharge. (P243)*
Avoid breathing dust/fume/gas/mist/vapours/spray. (P261)*
Wash thoroughly after handling. (P264)*
Use only outdoors or in a well-ventilated area. (P271)*
Wear protective gloves / protective clothing / eye protection / face protection. (P280)*
IF ON SKIN: Remove/Take off immediately all contaminated clothing. Rinse skin with water/shower. (P303+P361+P353)*
In case of fire: Use dry chemical, carbon dioxide, or foam for extinction.(P370+P378)*
If skin irritation occurs: Get medical advice/attention. (P313)*
Take off contaminated clothing and wash before reuse. (P362)*
IF SWALLOWED: Immediately call a POISON CENTER or doctor/physician. (P301+P310)*
Do NOT induce vomiting. (P331)*
IF INHALED: Remove victim to fresh air and keep at rest in a position comfortable for breathing. (P304+P340)*
Call a POISON CENTER or doctor/physician if you feel unwell. (P312)*
In case of fire: Use dry chemical, carbon dioxide, or foam for extinction.(P370+P378)*
Store in a well-ventilated place. Keep cool.(P403+P235)*
Store locked up. (P405)*
Dispose of contents/container to approved disposal facility. (P501)*

** (Applicable GHS hazard code.)*

Section 3: Composition / Information on Ingredients

Component	CASRN	Concentration[1]
Natural gas (petroleum), raw liq. mix	64741-48-6	100
n-Hexane	110-54-3	5-25
Benzene	71-43-2	0.1-5
Hydrogen Sulfide	7783-06-4	<1

Total Sulfur: > 0.5 wt%

[1] All concentrations are percent by weight unless ingredient is a gas. Gas concentrations are in percent by volume.

Section 4: First Aid Measures

Eye Contact: If irritation or redness develops from exposure, flush eyes with clean water. If symptoms persist, seek medical attention.

Skin Contact: Remove contaminated shoes and clothing, and flush affected area(s) with large amounts of water. If skin surface is damaged, apply a clean dressing and seek medical attention. If skin surface is not damaged, cleanse affected area(s) thoroughly by washing with mild soap and water or a waterless hand cleaner. If irritation or redness develops, seek medical attention. Wash contaminated clothing before reuse.

Inhalation (Breathing): If respiratory symptoms or other symptoms of exposure develop, move victim away from source of exposure and into fresh air in a position comfortable for breathing. If symptoms persist, seek immediate medical attention. If victim is not breathing, clear airway and immediately begin artificial respiration. If breathing difficulties develop, oxygen should be administered by qualified personnel. Seek immediate medical attention.

Ingestion (Swallowing): Aspiration hazard: Do not induce vomiting or give anything by mouth because this material can enter the lungs and cause severe lung damage. If victim is drowsy or unconscious and vomiting, place on the left side with the head down. If possible, do not leave victim unattended and observe closely for adequacy of breathing. Seek medical attention.

Most important symptoms and effects

Acute: Headache, drowsiness, dizziness, loss of coordination, disorientation and fatigue.

Delayed: Dry skin and possible irritation with repeated or prolonged exposure.

Notes to Physician: At high concentrations hydrogen sulfide may produce pulmonary edema, respiratory depression, and/or respiratory paralysis. The first priority in treatment should be the establishment of adequate ventilation and the administration of 100% oxygen. Animal studies suggest that nitrites are a useful antidote, however, documentation of the efficacy of nitrites in humans is lacking. If the diagnosis of hydrogen sulfide poisoning is confirmed and if the patient does not respond rapidly to supportive care, the use of nitrites may be an effective antidote if delivered within the first few minutes of exposure. For adults the dose is 10 mL of a 3% NaNO2 solution (0.5 gm NaNO2 in 15 mL water) I.V. over 2-4 minutes. The dosage should be adjusted in children or in the presence of anemia, and methemoglobin levels, arterial blood gases, and electrolytes should be monitored closely.

Epinephrine and other sympathomimetic drugs may initiate cardiac arrhythmias in persons exposed to high concentrations of hydrocarbon solvents (e.g., in enclosed spaces or with deliberate abuse). The use of other drugs with less arrhythmogenic potential should be considered. If sympathomimetic drugs are administered, observe for the development of cardiac arrhythmias.

Federal regulations (29 CFR 1910.1028) specify medical surveillance programs for certain exposures to benzene above the action level or PEL (specified in Section (i)(1)(i) of the Standard). In addition, employees exposed in an emergency situation shall, as described in Section (i)(4)(i), provide a urine sample at the end of the shift for measurement of urine phenol.

Other Comments: Before attempting rescue, first responders should be alert to the possible presence of hydrogen sulfide, a poisonous gas with the smell of rotten eggs, and should consider the need for respiratory protection (see Section 8). Remove casualty to fresh air as quickly as possible. Immediately begin artificial respiration if breathing has ceased. Consider whether oxygen administration is needed. Obtain medical advice for further treatment.

Section 5: Fire-Fighting Measures

NFPA 704 Hazard Class

Health: 1 **Flammability:** 4 **Instability:** 0 (0-Minimal, 1-Slight, 2-Moderate, 3-Serious, 4-Severe)

Unusual Fire & Explosion Hazards: Extremely flammable. This material can be ignited by heat, sparks, flames, or other sources of ignition (e.g., static electricity, pilot lights, mechanical/electrical equipment, and electronic devices such as cell phones, computers, calculators, and pagers which have not been certified as intrinsically safe). Vapors may travel considerable distances to a source of ignition where they can ignite, flash back, or explode. May create vapor/air explosion hazard indoors, in confined spaces, outdoors, or in sewers. This product will float and can be reignited on surface water. Vapors are heavier than air and can accumulate in low areas. If container is not properly cooled, it can rupture in the heat of a fire. Hazardous combustion/decomposition products, including hydrogen sulfide, may be released by this material when exposed to heat or fire. Use caution and wear protective clothing, including respiratory protection.

Extinguishing Media: Dry chemical, carbon dioxide, or foam is recommended. Water spray is recommended to cool or protect exposed materials or structures. Carbon dioxide can displace oxygen. Use caution when applying carbon dioxide in confined spaces. Simultaneous use of foam and water on the same surface is to be avoided as water destroys the foam. Water may be ineffective for extinguishment, unless used under favorable conditions by experienced fire fighters.

Fire Fighting Instructions: For fires beyond the initial stage, emergency responders in the immediate hazard area should wear protective clothing. When the potential chemical hazard is unknown, in enclosed or confined spaces, a self contained breathing apparatus should be worn. In addition, wear other appropriate protective equipment as conditions warrant (see Section 8).

Isolate immediate hazard area and keep unauthorized personnel out. Stop spill/release if it can be done safely. Move undamaged containers from immediate hazard area if it can be done safely. Water spray may be useful in minimizing or dispersing vapors and to protect personnel. Cool equipment exposed to fire with water, if it can be done safely. Avoid spreading burning liquid with water used for cooling purposes.

Hazardous Combustion Products: Combustion may yield smoke, carbon monoxide, and other products of incomplete combustion. Hydrogen sulfide and oxides of nitrogen and sulfur may also be formed.

See Section 9 for Flammable Properties including Flash Point and Flammable (Explosive) Limits

Section 6: Accidental Release Measures

Personal Precautions: Extremely flammable. Spillages of liquid product will create a fire hazard and may form an explosive atmosphere. Keep all sources of ignition and hot metal surfaces away from spill/release if safe to do so. The use of explosion-proof electrical equipment is recommended. May contain or release poisonous hydrogen sulfide gas. If the presence of dangerous amounts of H2S around the spilled product is suspected, additional or special actions may be warranted, including access restrictions and use of protective equipment. Stay upwind and away from spill/release. Avoid direct contact with material. For large spillages, notify persons down wind of the spill/release, isolate immediate hazard area and keep unauthorized personnel out. Wear appropriate protective equipment, including respiratory protection, as conditions warrant (see Section 8). See Sections 2 and 7 for additional information on hazards and precautionary measures.

Environmental Precautions: Stop spill/release if it can be done safely. Prevent spilled material from entering sewers, storm drains, other unauthorized drainage systems, and natural waterways. Use foam on spills to minimize vapors. Use water sparingly to minimize environmental contamination and reduce disposal requirements. If spill occurs on water notify appropriate authorities and advise shipping of any hazard. Spills into or upon navigable waters, the contiguous zone, or adjoining shorelines that cause a sheen or discoloration on the surface of the water, may require notification of the National Response Center (phone number 800-424-8802).

Methods for Containment and Clean-Up: Notify relevant authorities in accordance with all applicable regulations. Immediate cleanup of any spill is recommended. Dike far ahead of spill for later recovery or disposal. Absorb spill with inert material such as sand or vermiculite, and place in suitable container for disposal. If spilled on water remove with appropriate methods (e.g. skimming, booms or absorbents). In case of soil contamination, remove contaminated soil for remediation or disposal, in accordance with local regulations.

Recommended measures are based on the most likely spillage scenarios for this material; however local conditions and regulations may influence or limit the choice of appropriate actions to be taken.

Section 7: Handling and Storage

Precautions for safe handling: Keep away from ignition sources such as heat/sparks/open flame – No smoking. Take precautionary measures against static discharge. Nonsparking tools should be used. May contain or release dangerous levels of hydrogen sulfide. Obtain special instructions before use. Do not handle until all safety precautions have been read and understood. Avoid breathing vapors or mists. Use only outdoors or in well-ventilated area. Wear protective gloves/clothing and eye/face protection. Wash thoroughly after handling. Use good personal hygiene practices and wear appropriate personal protective equipment (see section 8).

Extremely Flammable. May vaporize easily at ambient temperatures. The vapor is heavier than air and may create an explosive mixture of vapor and air. Beware of accumulation in confined spaces and low lying areas. Open container slowly to relieve any pressure. Electrostatic charge may accumulate and create a hazardous condition when handling or processing this material. To avoid fire or explosion, dissipate static electricity during transfer by grounding and bonding containers and equipment before transferring material. The use of explosion-proof electrical equipment is recommended and may be required (see appropriate fire codes). Refer to NFPA-70 and/or API RP 2003 for specific bonding/grounding requirements. Do not enter confined spaces such as tanks or pits without following proper entry procedures such as ASTM D-4276 and 29CFR 1910.146. Do not wear contaminated clothing or shoes. Keep contaminated clothing away from sources of ignition such as sparks or open flames.

Static Accumulation Hazard: Electrostatic charge may accumulate and create a hazardous condition when handling this material. To minimize this hazard, bonding and grounding of tanks, transfer piping, and storage tank level floats are necessary but may not, by themselves, be sufficient. Review all operations which have the potential of generating and accumulating an electrostatic charge and/or a flammable atmosphere (including tank and container filling, splash filling, tank cleaning, sampling, gauging, switch loading, filtering, mixing, agitation, and vacuum truck operations) and use appropriate mitigating procedures. Special care should be given to ensure that special slow load procedures for "switch loading" are followed to avoid the static ignition hazard that can exist when higher flash point material (such as fuel oil or diesel) is loaded into tanks previously containing low flash point products (such as gasoline or naphtha). For more information, refer to OSHA Standard 29 CFR 1910.106, 'Flammable and Combustible Liquids', National Fire Protection Association (NFPA 77, 'Recommended Practice on Static Electricity', and/or the American Petroleum Institute (API) Recommended Practice 2003, 'Protection Against Ignitions Arising Out of Static, Lightning, and Stray Currents'.

Conditions for safe storage: This material may contain or release poisonous hydrogen sulfide gas. In a tank, barge, or other closed container, the vapor space above this material may accumulate hazardous concentrations of hydrogen sulfide. Check atmosphere for oxygen content, H2S, and flammability prior to entry. Keep container(s) tightly closed and properly labeled. Use and store this material in cool, dry, well-ventilated areas away from heat, direct sunlight, hot metal surfaces, and all sources of ignition. Store only in approved containers. Post area "No Smoking or Open Flame." Keep away from any incompatible material (see Section 10). Protect container(s) against physical damage. Outdoor or detached storage is preferred. Indoor storage should meet OSHA standards and appropriate fire codes.

"Empty" containers retain residue and may be dangerous. Do not pressurize, cut, weld, braze, solder, drill, grind, or expose such containers to heat, flame, sparks, or other sources of ignition. They may explode and cause injury or death. "Empty" drums should be completely drained, properly bunged, and promptly shipped to the supplier or a drum reconditioner. All containers should be disposed of in an environmentally safe manner and in accordance with governmental regulations. Before working on or in tanks which contain or have contained this material, refer to OSHA regulations, ANSI Z49.1, and other references pertaining to cleaning, repairing, welding, or other contemplated operations.

Section 8: Exposure Controls / Personal Protection

Component	ACGIH	OSHA	Other
Natural gas (petroleum), raw liq. mix	TWA: 300 ppm (as Gasoline)	TWA: 400 mg/m^3 TWA: 100 ppm	0.5 ppm TWA8hr (as benzene) 0.25 ppm TWA12hr (as benzene) 2.5 ppm STEL (as benzene) (American Energy Guidelines)
n-Hexane	TWA: 50 ppm Skin	TWA: 500 ppm TWA: 1800 mg/m^3	---
Benzene	STEL: 2.5 ppm TWA: 0.5 ppm Skin	Ceiling: 25 ppm STEL: 5 ppm TWA: 10 ppm TWA: 1 ppm	---
Hydrogen Sulfide	STEL: 5 ppm TWA: 1 ppm	Ceiling: 20 ppm	TWA: 5 ppm 8hr TWA: 2.5 ppm 12hr STEL: 15 ppm (American Energy Guidelines)

Note: State, local or other agencies or advisory groups may have established more stringent limits. Consult an industrial hygienist or similar professional, or your local agencies, for further information.

Engineering controls: If current ventilation practices are not adequate to maintain airborne concentrations below the established exposure limits, additional engineering controls may be required.

Eye/Face Protection: The use of eye protection that meets or exceeds ANSI Z.87.1 is recommended to protect against potential eye contact, irritation, or injury. Depending on conditions of use, a face shield may be necessary.

Skin/Hand Protection: The use of gloves impervious to the specific material handled is advised to prevent skin contact. Users should check with manufacturers to confirm the breakthrough performance of their products. Depending on exposure and use conditions, additional protection may be necessary to prevent skin contact including use of items such as chemical resistant boots, aprons, arm covers, hoods, coveralls, or encapsulated suits. Suggested protective materials: Nitrile

Respiratory Protection: A NIOSH approved, self-contained breathing apparatus (SCBA) or equivalent operated in a pressure demand or other positive pressure mode should be used in situations of oxygen deficiency (oxygen content less than 19.5 percent), unknown exposure concentrations, or situations that are immediately dangerous to life or health (IDLH).

A respiratory protection program that meets or is equivalent to OSHA 29 CFR 1910.134 and ANSI Z88.2 should be followed whenever workplace conditions warrant a respirator's use.

If benzene concentrations equal or exceed applicable exposure limits, OSHA requirements for personal protective equipment, exposure monitoring, and training may apply (29CFR1910.1028 - Benzene).

Other Protective Equipment: Eye wash and quick-drench shower facilities should be available in the work area. Thoroughly clean shoes and wash contaminated clothing before reuse.

Suggestions provided in this section for exposure control and specific types of protective equipment are based on readily available information. Users should consult with the specific manufacturer to confirm the performance of their protective equipment. Specific situations may require consultation with industrial hygiene, safety, or engineering professionals.

Section 9: Physical and Chemical Properties

Note: Unless otherwise stated, values are determined at 20°C (68°F) and 760 mm Hg (1 atm). Data represent typical values and are not intended to be specifications.

Appearance:	Colorless
Physical Form:	Liquid
Odor:	Gasoline; Rotten egg / sulfurous
Odor Threshold:	No data
pH:	Not applicable
Vapor Pressure:	150 - 200 psia (Reid VP) @ 100°F / 37.8°C
Vapor Density (air=1):	>1
Initial Boiling Point/Range:	No data
Melting/Freezing Point:	No data
Solubility in Water:	Negligible
Partition Coefficient (n-octanol/water) (Kow):	No data
Specific Gravity (water=1):	(estimated) 0.5 - 0.7 @ 68ºF / 20ºC
Percent Volatile:	100%
Evaporation Rate (nBuAc=1):	No data
Flash Point:	< -99 °F / < -73 °C
Test Method:	(estimate)
Lower Explosive Limits (vol % in air):	No data
Upper Explosive Limits (vol % in air):	No data
Auto-ignition Temperature:	No data

Section 10: Stability and Reactivity

Stability: Stable under normal ambient and anticipated conditions of use.

Conditions to Avoid: Avoid high temperatures and all sources of ignition. Prevent vapor accumulation.

Materials to Avoid (Incompatible Materials): Avoid contact with strong oxidizing agents and strong reducing agents.

Hazardous Decomposition Products: Not anticipated under normal conditions of use.

Hazardous Polymerization: Not known to occur.

Section 11: Toxicological Information

Information on Toxicological Effects of Substance/Mixture

Acute Toxicity	Hazard	Additional Information	LC50/LD50 Data
Inhalation	Expected to have a low degree of toxicity by inhalation	May contain or release poisonous hydrogen sulfide gas - see Other Comments.	> 5.2 mg/L (vapor)
Skin Absorption	Unlikely to be harmful		> 2 g/kg
Ingestion (Swallowing)	Unlikely to be harmful		> 5 g/kg

Aspiration Hazard: May be fatal if swallowed and enters airways.

Skin Corrosion/Irritation: Causes skin irritation. Repeated exposure may cause skin dryness or cracking.

Serious Eye Damage/Irritation: Causes mild eye irritation. .

Signs and Symptoms: Effects of overexposure can include slight irritation of the respiratory tract, nausea, vomiting, and signs of nervous system depression (e.g., headache, drowsiness, dizziness, loss of coordination, disorientation and fatigue). Continued exposure to high concentrations can result in vomiting, cardiac irregularities and sudden loss of consciousness.

Skin Sensitization: Not expected to be a skin sensitizer.

Respiratory Sensitization: No information available.

Specific Target Organ Toxicity (Single Exposure): May cause drowsiness and dizziness.

Specific Target Organ Toxicity (Repeated Exposure): Not expected to cause organ effects from repeated exposure.

Carcinogenicity: May cause cancer Based on component information.

Germ Cell Mutagenicity: Not expected to cause heritable genetic effects.

Reproductive Toxicity: Not expected to cause reproductive toxicity.

Other Comments: This material may contain or liberate hydrogen sulfide, a poisonous gas with the smell of rotten eggs. The smell disappears rapidly because of olfactory fatigue so odor may not be a reliable indicator of exposure. Effects of overexposure include irritation of the eyes, nose, throat and respiratory tract, blurred vision, photophobia (sensitivity to light), and pulmonary edema (fluid accumulation in the lungs). Severe exposures can result in nausea, vomiting, muscle weakness or cramps, headache, disorientation and other signs of nervous system depression, irregular heartbeats, convulsions, respiratory failure, and death.

Information on Toxicological Effects of Components

Natural gas (petroleum), raw liq. mix

Carcinogenicity: Two year inhalation studies of vaporized unleaded gasoline produced an increased incidence of kidney tumors in male rats and liver tumors in female mice. Repeated skin application of various petroleum naphthas in mice for two years resulted in an increased incidence of skin tumors but only in the presence of severe skin irritation. Follow-up mechanistic studies suggest that the occurrence of these tumors may be the consequence of promotional processes and not relevant to human risk assessment. Epidemiology data collected from a study of more than 18,000 petroleum marketing and distribution workers showed no increased risk of leukemia, multiple myeloma, or kidney cancer from gasoline exposure. Unleaded gasoline has been identified as a possible carcinogen by the International Agency for Research on Cancer.
Target Organs: Two year inhalation studies of wholly vaporized unleaded gasoline, and 90 days studies of various petroleum naphthas, did not produce significant target organ toxicity in laboratory animals. Nephropathy in male rats, characterized by the accumulation of alpha-2-u- globulin in epithelial cells of the proximal tubules was observed, however follow-up studies suggest that these changes are unique to the male rat.
Reproductive Toxicity: No evidence of developmental toxicity was found in pregnant laboratory animals (rats and mice) exposed to high vapor concentrations of unleaded gasoline and petroleum naphthas via inhalation. A two-generation reproductive toxicity study of vapor recovery gasoline did not adversely affect reproductive function or offspring survival and development.

n-Hexane

Target Organs: Excessive exposure to n-hexane can result in peripheral neuropathies. The initial symptoms are symmetrical sensory numbness and paresthesias of distal portions of the extremities. Motor weakness is typically observed in muscles of the toes and fingers but may also involve muscles of the arms, thighs and forearms. The onset of these symptoms may be delayed for several months to a year after the beginning of exposure. The neurotoxic properties of n-hexane are potentiated by exposure to methyl ethyl ketone and methyl isobutyl ketone.
Reproductive Toxicity: Prolonged exposure to high concentrations of n-hexane (>1,000 ppm) resulted in decreased sperm count and degenerative changes in the testes of rats but not those of mice.

Benzene

Carcinogenicity: Benzene is an animal carcinogen and is known to produce acute myelogenous leukemia (a form of cancer) in humans. Benzene has been identified as a human carcinogen by IARC, the US National Toxicology Program and the US-Occupational Safety and Health Administration.
Target Organs: Prolonged or repeated exposures to benzene vapors can cause damage to the blood and blood forming organs, including disorders like leukopenia, thrombocytopenia, and aplastic anemia.
Reproductive Toxicity: Some studies in occupationally exposed women have suggested benzene exposure increased risk of miscarriage and stillbirth and decreased birth weight and gestational age. The size of the effects detected in these studies was small, and ascertainment of exposure and outcome in some cases relied on self-reports, which may limit the reliability of these results.

Germ Cell Mutagenicity: Benzene exposure has resulted in chromosomal aberrations in human lymphocytes and animal bone marrow cells. Exposure has also been associated with chromosomal aberrations in sperm cells in human and animal studies.

Toluene

Carcinogenicity: Exposure of rats and mice to toluene at concentrations ranging from 120-1200 ppm for two years did not demonstrate evidence of carcinogenicity. Toluene has not been listed as a carcinogen by IARC.

Target Organs: Epidemiology studies suggest that chronic occupational overexposure to toluene may damage color vision. Subchronic and chronic inhalation studies with toluene produced kidney and liver damage, hearing loss and central nervous system (brain) damage in laboratory animals. Intentional misuse by deliberate inhalation of high concentrations of toluene has been shown to cause liver, kidney, and central nervous system damage, including hearing loss and visual disturbances.

Reproductive Toxicity: Exposure to toluene during pregnancy has demonstrated limited evidence of developmental toxicity in laboratory animals. Decreased fetal body weight and increased skeletal variations in both inhalation and oral studies, but only at doses that were maternally toxic. No fetal toxicity was seen at doses that were not maternally toxic. Decreased sperm counts have been observed in male rats in the absence of a reduction in fertility. Toluene has been reported to cause mental or growth retardation in the children of solvent abusers who directly inhale toluene during pregnancy.

Cyclohexane

Reproductive Toxicity: Two-generation reproduction and developmental toxicity studies using rats and rabbits exposed (whole-body) to atmospheric concentrations up to 7000 ppm cyclohexane did not detect evidence of developmental toxicity in either species.

Section 12: Ecological Information

Toxicity: Acute aquatic toxicity studies on samples of gasoline and naphtha streams show acute toxicity values greater than 1 mg/L and mostly in the range 1-100 mg/L. These tests were carried out on water accommodated fractions, in closed systems to prevent evaporative loss. Results are consistent with the predicted aquatic toxicity of these substances based on their hydrocarbon composition. These substances should be regarded as toxic to aquatic organisms, with the potential to cause long term adverse effects in the aquatic environment. Classification: H411; Chronic Cat 2.

Persistence and Degradability: The hydrocarbons in this material are not readily biodegradable but are regarded as inherently biodegradable since their hydrocarbon components can be degraded by microorganisms.

Persistence per IOPC Fund definition: Non-Persistent

Bioaccumulative Potential: Log Kow values measured for the hydrocarbon components of this material range from 3 to greater than 6 and therefore are regarded as having the potential to bioaccumulate. In practice, metabolic processes or physical properties may prevent this effect or limit bioavailability.

Mobility in Soil: On release to water, hydrocarbons will float on the surface and since they are sparingly soluble, the only significant loss is volatilization to air. In air, these hydrocarbons are photodegraded by reaction with hydroxyl radicals with half lives varying from 6.5 days for benzene to 0.5 days for n-dodecane.

Other Adverse Effects: None anticipated.

Section 13: Disposal Considerations

The generator of a waste is always responsible for making proper hazardous waste determinations and needs to consider state and local requirements in addition to federal regulations.

This material, if discarded as produced, would not be a federally regulated RCRA "listed" hazardous waste. However, it would likely be identified as a federally regulated RCRA hazardous waste for the following characteristic(s) shown below. See Sections 7 and 8 for information on handling, storage and personal protection and Section 9 for physical/chemical properties. It is possible that the material as produced contains constituents which are not required to be listed in the MSDS but could affect the hazardous waste determination. Additionally, use which results in chemical or physical change of this material could subject it to regulation as a hazardous waste.

Container contents should be completely used and containers should be emptied prior to discard. Container residues and rinseates could be considered to be hazardous wastes.

EPA Waste Number(s)

- D001 - Ignitability characteristic
- D018 - Toxicity characteristic (Benzene)

Section 14: Transport Information

U.S. Department of Transportation (DOT)

Shipping Description:
If vapor pressure is > 300 kPa (43.5 psia) at 50° C (122° F) shipping description is:
UN1965, Hydrocarbon gas mixture, liquefied, n.o.s., 2.1; ,
If vapor pressure is <= 300 kPa (43.5 psia) at 50° C (122° F) shipping description is:
UN3295, Hydrocarbons, liquid, n.o.s., 3, I ***or*** II [**I** if BP < 95° F (35° C); **II** if BP > 95° F]

Non-Bulk Package Marking:
Must be consistent with shipping description, either:
Hydrocarbon gas mixture, liquefied, n.o.s., UN1965
or
Hydrocarbons, liquid, n.o.s., UN3295

Non-Bulk Package Labeling:
For UN1965: Flammable gas
For UN3295: Flammable liquid

Bulk Package/Placard Marking:
For UN1965: Flammable gas / 1965
For UN3295: Flammable / 3295

Packaging - References:
For UN1965: 49 CFR: 173.306; 173.304; 173.314 & .315
For UN3295: 49 CFR 173.150; 173.201; 173.243 ***[PG I]***
-or-
49 CFR 173.150; 173.202; 173.242 ***[PG II]***
(Exceptions; Non-bulk; Bulk)

Hazardous Substance: See Section 15 for RQ`s
Emergency Response Guide: ***UN1965 -*** 115; ***UN3295 -*** 128;
Note:
The following alternate shipping description order may be used until January 1, 2013:
Proper Shipping name, Hazard Class or Division, (Subsidiary Hazard if any), UN or NA number, Packing Group
Transport in bulk according to Annex II of MARPOL 73/78 and the IBC Code: *Not applicable*
Other shipping description elements may be required for DOT compliance.

International Maritime Dangerous Goods (IMDG)

Shipping Description:
If boiling point is < 20° C shipping description is:
UN1965, Hydrocarbon gas mixture, liquefied, n.o.s., (Propane , Butane), 2.1
If vapor pressure is <= 300 kPa (43.5 psia) at 50° C (122° F) shipping description is:
UN3295, Hydrocarbons, liquid, n.o.s., 3, I ***or*** II (FP° C cc), *[where FP is the material's flash point in degrees C cc.]*
[**I** if BP < 95° F (35° C); **II** if BP > 95° F];

Non-Bulk Package Marking:
Must be consistent with shipping description, either:
Hydrocarbon gas mixture, liquefied, n.o.s., (Propane, Butane), UN1965
or
Hydrocarbons, liquid, n.o.s., UN3295

Labels:
For UN1965: Flammable gas
For UN3295: Flammable liquid

Placards/Marking (Bulk):
For UN1965: Flammable gas / 1965
For UN3295: Flammable / 3295

Packaging - Non-Bulk:
For UN1965: P200
For UN3295: P001

EMS:
For UN1965: F-D, S-U
For UN3295: F-E, S-D

Note:
If transported in bulk by marine vessel in international waters, product is being carried under the scope of MARPOL Annex I.

International Civil Aviation Org. / International Air Transport Assoc. (ICAO/IATA)

UN/ID #: UN1965 ***or*** UN3295

Proper Shipping Name: ***For UN1965:*** Hydrocarbon gas mixture, liquefied, n.o.s. (Propane, Butane)
For UN3295: Hydrocarbons, liquid, n.o.s.

Hazard Class/Division: ***For UN1965:*** 2.1
For UN3295: 3

Subsidiary risk: None

Packing Group: ***For UN1965:*** None
For UN3295: I ***or*** II ***[Determined by IATA 3.3.2]***

Non-Bulk Package Marking: ***For UN1965:*** Hydrocarbon gas mixture, liquefied, n.o.s. (Propane, Butane), UN1965
For UN3295: Hydrocarbons, liquid, n.o.s., UN3295

Labels: ***For UN1965:*** Flammable gas , Cargo Aircraft Only
For UN3295: Flammable liquid

ERG Code: ***For UN1965:*** 10L ***or For UN3295:*** 3H

	LTD. QTY	Passenger Aircraft	Cargo Aircraft Only
Packaging Instruction #:	***UN1965 -*** Forbidden ***UN3295 -*** Forbidden - ***[PG I]*** Y341 - ***[PG II]***	***UN1965 -*** *Forbidden* ***UN3295 -*** 351 - ***[PG I]*** 353 - ***[PG II]***	***UN1965 -*** 200 ***UN3295 -*** 361 - ***[PG I]*** 364 - ***[PG II]***
Max. Net Qty. Per Package:	***UN3295 -*** Forbidden - ***[PG I]*** 1L - ***[PG II]***	***UN3295 -*** 1L - ***[PG I]*** 5 L - ***[PG II]***	***UN1965 -*** 150 kg ***UN3295 -*** 30 L - ***[PG I]*** 60 L - ***[PG II]***

Section 15: Regulatory Information

CERCLA/SARA - Section 302 Extremely Hazardous Substances and TPQs (in pounds):
This material contains the following chemicals subject to the reporting requirements of SARA 302 and 40 CFR 372:

Component	TPQ	EPCRA RQ
Hydrogen Sulfide	500 lb	100 lb

CERCLA/SARA - Section 311/312 (Title III Hazard Categories)

Acute Health: Yes
Chronic Health: Yes
Fire Hazard: Yes
Pressure Hazard: No
Reactive Hazard: No

CERCLA/SARA - Section 313 and 40 CFR 372:
This material contains the following chemicals subject to the reporting requirements of Section 313 of SARA Title III and 40 CFR 372:

Component	Concentration[1]	de minimis
n-Hexane	5-25	1.0%
Toluene	1-5	1.0%
Benzene	0.1-5	0.1%
Cyclohexane	0-3	1.0%

EPA (CERCLA) Reportable Quantity (in pounds):
EPA's Petroleum Exclusion applies to this material - (CERCLA 101(14)).

California Proposition 65:
Warning: This material may contain detectable quantities of the following chemicals, known to the State of California to cause cancer, birth defects or other reproductive harm, and which may be subject to the warning requirements of California Proposition 65 (CA Health & Safety Code Section 25249.5):

Component	Type of Toxicity
Toluene	Developmental Toxicant Female Reproductive Toxicant
Benzene	Cancer Developmental Toxicant Male Reproductive Toxicant

International Hazard Classification

Canada:
This product has been classified in accordance with the hazard criteria of the Controlled Products Regulations (CPR) and the MSDS contains all the information required by the Regulations.

WHMIS Hazard Class:
B2 - Flammable Liquids
D2A
D2B

National Chemical Inventories
All components are either listed on the US TSCA Inventory, or are not regulated under TSCA
All components are either on the DSL, or are exempt from DSL listing requirements

U.S. Export Control Classification Number: EAR99

Section 16: Other Information

Date of Issue:	20-Sep-2014
Status:	FINAL
Previous Issue Date:	20-Sep-2014
Revised Sections or Basis for Revision:	Identified Hazards (Section 2) Precautionary Statement(s) (Section 2) First Aid (Section 4)Exposure limits (Section 8) Shipping information (Section 14) Regulatory information (Section 15)
SDS Number:	786340

Guide to Abbreviations:
ACGIH = American Conference of Governmental Industrial Hygienists; CASRN = Chemical Abstracts Service Registry Number; CEILING = Ceiling Limit (15 minutes); CERCLA = The Comprehensive Environmental Response, Compensation, and Liability Act; EPA = Environmental Protection Agency; GHS = Globally Harmonized System; IARC = International Agency for Research on Cancer; INSHT = National Institute for Health and Safety at Work; IOPC = International Oil Pollution Compensation; LEL = Lower Explosive Limit; NE = Not Established; NFPA = National Fire Protection Association; NTP = National Toxicology Program; OSHA = Occupational Safety and Health Administration; PEL = Permissible Exposure Limit (OSHA); SARA = Superfund Amendments and Reauthorization Act; STEL = Short Term Exposure Limit (15 minutes); TLV = Threshold Limit Value (ACGIH); TWA = Time Weighted Average (8 hours); UEL = Upper Explosive Limit; WHMIS = Worker Hazardous Materials Information System (Canada)

Disclaimer of Expressed and implied Warranties:
The information presented in this Material Safety Data Sheet is based on data believed to be accurate as of the date this Material Safety Data Sheet was prepared. HOWEVER, NO WARRANTY OF MERCHANTABILITY, FITNESS FOR ANY PARTICULAR PURPOSE, OR ANY OTHER WARRANTY IS EXPRESSED OR IS TO BE IMPLIED REGARDING THE ACCURACY OR COMPLETENESS OF THE INFORMATION PROVIDED ABOVE, THE RESULTS TO BE OBTAINED FROM THE USE OF THIS INFORMATION OR THE PRODUCT, THE SAFETY OF THIS PRODUCT, OR THE HAZARDS RELATED TO ITS USE. No responsibility is assumed for any damage or injury resulting from abnormal use or from any failure to adhere to recommended practices. The information provided above, and the product, are furnished on the condition that the person receiving them shall make their own determination as to the suitability of the product for their particular purpose and on the condition that they assume the risk of their use. In addition, no authorization is given nor implied to practice any patented invention without a license.

Crude Condensate

Safety Data Sheet

Section 1: Identification of the substance or mixture and of the supplier

Product Name:	Crude Condensate
SDS Number:	730370
Synonyms/Other Means of Identification:	Natural Gas Condensates, Petroleum Crude Oil Condensate Gas Drips
MARPOL Annex I Category:	Naphthas and Condensates
Intended Use:	Feedstock
Manufacturer:	American Energy Partners 301 N.W. 63rd Oklahoma City, OK 73116
Emergency Health and Safety Number:	Chemtrec: 800-424-9300 (24 Hours)
SDS Information:	Phone: 844-210-6000 URL: www.americanenergypartners.com

Section 2: Hazard(s) Identification

Classification

H224 -- Flammable liquids -- Category 1
H304 -- Aspiration Hazard -- Category 1
H315 -- Skin corrosion/irritation -- Category 2
H332 -- Acute toxicity, Inhalation -- Category 4
H336 -- Specific target organ toxicity (single exposure) -- Category 3
H350 -- Carcinogenicity -- Category 1B
H411 -- Hazardous to the aquatic environment, chronic toxicity -- Category 2

Hazards not Otherwise Classified

May contain or release poisonous hydrogen sulfide gas

Label Elements

DANGER

Extremely flammable liquid and vapor. (H224)*
Causes skin irritation. (H315)*
May be fatal if swallowed and enters airways. (H304)*
Contains poisonous hydrogen sulfide gas
Harmful if inhaled. (H332)*
May cause drowsiness or dizziness. (H336)*
May cause cancer. (H350)*
Toxic to aquatic life with long lasting effects. (H411)*

Precautionary Statement(s):
Obtain special instructions before use. (P201)*
Do not handle until all safety precautions have been read and understood. (P202)*
Keep away from heat/sparks/open flames/hot surfaces. - No smoking. (P210)*
Keep container tightly closed. (P233)*
Keep cool. (P235)*
Ground/bond container and receiving equipment. (P240)*
Use with explosion-proof equipment. (P241)*
Use only non-sparking tools. (P242)*
Take precautionary measures against static discharge. (P243)*
Avoid breathing dust/fume/gas/mist/vapours/spray. (P261)*
Wash thoroughly after handling. (P264)*
Use only outdoors or in a well-ventilated area. (P271)*
Avoid release to the environment. (P273)*
Wear protective gloves / protective clothing / eye protection / face protection. (P280)*
IF ON SKIN: Remove/Take off immediately all contaminated clothing. (P361)* Wash with plenty of soap and water. (P352)*
If skin irritation occurs: Get medical advice/attention. (P313)*
Take off contaminated clothing and wash before reuse. (P362)*
IF INHALED: Remove victim to fresh air and keep at rest in a position comfortable for breathing. (P340)*
Call a POISON CENTER or doctor/physician if you feel unwell. (P312)*
IF SWALLOWED: Immediately call a POISON CENTER or doctor/physician. (P301+P310)*
Do NOT induce vomiting. (P331)*
In case of fire: Use dry chemical, carbon dioxide, or foam for extinction.(P370+P378)*
Collect spillage. (P391)*
Store locked up. (P405)*
Store in a well-ventilated place. Keep container tightly closed. (P403+P233)*
Dispose of contents/container to approved disposal facility. (P501)*

** (Applicable GHS hazard code.)*

Section 3: Composition / Information on Ingredients

Component	CASRN	Concentration[1]
Natural Gas Condensate ..C2-20	64741-47-5	100
Toluene	108-88-3	1-7
Hydrogen Sulfide	7783-06-4	0.1-5
Benzene	71-43-2	<5

[1] All concentrations are percent by weight unless ingredient is a gas. Gas concentrations are in percent by volume.

Crude oil, natural gas and natural gas condensate can contain minor amounts of sulfur, nitrogen and oxygen containing organic compounds as well as trace amounts of heavy metals like mercury, arsenic, nickel, and vanadium. Composition can vary depending on the source of crude.

Section 4: First Aid Measures

Eye Contact: If irritation or redness develops from exposure, flush eyes with clean water. If symptoms persist, seek medical attention.

Skin Contact: Remove contaminated shoes and clothing, and flush affected area(s) with large amounts of water. If skin surface is damaged, apply a clean dressing and seek medical attention. If skin surface is not damaged, cleanse affected area(s) thoroughly by washing with mild soap and water or a waterless hand cleaner. If irritation or redness develops, seek medical attention. Wash contaminated clothing before reuse.

Inhalation (Breathing): Immediately move victim away from exposure and into fresh air in a position comfortable for breathing. If respiratory symptoms or other symptoms of exposure develop, seek immediate medical attention. If victim is not breathing, clear airway and immediately begin artificial respiration. If breathing difficulties develop, oxygen should be administered by qualified personnel. Seek immediate medical attention.

Ingestion (Swallowing): Aspiration hazard: Do not induce vomiting or give anything by mouth because this material can enter the lungs and cause severe lung damage. If victim is drowsy or unconscious and vomiting, place on the left side with the head down. If possible, do not leave victim unattended and observe closely for adequacy of breathing. Seek medical attention.

Most important symptoms and effects

Acute: Headache, drowsiness, dizziness, loss of coordination, disorientation and fatigue.

Delayed: Dry skin and possible irritation with repeated or prolonged exposure.

Notes to Physician: At high concentrations hydrogen sulfide may produce pulmonary edema, respiratory depression, and/or respiratory paralysis. The first priority in treatment should be the establishment of adequate ventilation and the administration of 100% oxygen. Animal studies suggest that nitrites are a useful antidote, however, documentation of the efficacy of nitrites in humans is lacking. If the diagnosis of hydrogen sulfide poisoning is confirmed and if the patient does not respond rapidly to supportive care, the use of nitrites may be an effective antidote if delivered within the first few minutes of exposure. For adults the dose is 10 mL of a 3% $NaNO_2$ solution (0.5 gm $NaNO_2$ in 15 mL water) I.V. over 2-4 minutes. The dosage should be adjusted in children or in the presence of anemia, and methemoglobin levels, arterial blood gases, and electrolytes should be monitored closely.

Epinephrine and other sympathomimetic drugs may initiate cardiac arrhythmias in persons exposed to high concentrations of hydrocarbon solvents (e.g., in enclosed spaces or with deliberate abuse). The use of other drugs with less arrhythmogenic potential should be considered. If sympathomimetic drugs are administered, observe for the development of cardiac arrhythmias.

Federal regulations (29 CFR 1910.1028) specify medical surveillance programs for certain exposures to benzene above the action level or PEL (specified in Section (i)(1)(i) of the Standard). In addition, employees exposed in an emergency situation shall, as described in Section (i)(4)(i), provide a urine sample at the end of the shift for measurement of urine phenol.

Other Comments: Before attempting rescue, first responders should be alert to the possible presence of hydrogen sulfide, a poisonous gas with the smell of rotten eggs, and should consider the need for respiratory protection (see Section 8). Remove casualty to fresh air as quickly as possible. Immediately begin artificial respiration if breathing has ceased. Consider whether oxygen administration is needed. Obtain medical advice for further treatment.

Section 5: Fire-Fighting Measures

NFPA 704 Hazard Class

Health: 2 **Flammability:** 4 **Instability:** 0 (0-Minimal, 1-Slight, 2-Moderate, 3-Serious, 4-Severe)

Unusual Fire & Explosion Hazards: Extremely flammable. This material can be ignited by heat, sparks, flames, or other sources of ignition (e.g., static electricity, pilot lights, mechanical/electrical equipment, and electronic devices such as cell phones, computers, calculators, and pagers which have not been certified as intrinsically safe). Vapors may travel considerable distances to a source of ignition where they can ignite, flash back, or explode. May create vapor/air explosion hazard indoors, in confined spaces, outdoors, or in sewers. This product will float and can be reignited on surface water. Vapors are heavier than air and can accumulate in low areas. If container is not properly cooled, it can rupture in the heat of a fire. Hazardous combustion/decomposition products, including hydrogen sulfide, may be released by this material when exposed to heat or fire. Use caution and wear protective clothing, including respiratory protection.

Extinguishing Media: Dry chemical, carbon dioxide, or foam is recommended. Water spray is recommended to cool or protect exposed materials or structures. Carbon dioxide can displace oxygen. Use caution when applying carbon dioxide in confined spaces. Simultaneous use of foam and water on the same surface is to be avoided as water destroys the foam. Water may be ineffective for extinguishment, unless used under favorable conditions by experienced fire fighters.

Fire Fighting Instructions: For fires beyond the initial stage, emergency responders in the immediate hazard area should wear protective clothing. When the potential chemical hazard is unknown, in enclosed or confined spaces, a self contained breathing apparatus should be worn. In addition, wear other appropriate protective equipment as conditions warrant (see Section 8).

Isolate immediate hazard area and keep unauthorized personnel out. Stop spill/release if it can be done safely. Move undamaged containers from immediate hazard area if it can be done safely. Water spray may be useful in minimizing or dispersing vapors and to protect personnel. Cool equipment exposed to fire with water, if it can be done safely. Avoid spreading burning liquid with water used for cooling purposes.

Hazardous Combustion Products: Combustion may yield smoke, carbon monoxide, and other products of incomplete combustion. Hydrogen sulfide and oxides of nitrogen and sulfur may also be formed.

See Section 9 for Flammable Properties including Flash Point and Flammable (Explosive) Limits

Section 6: Accidental Release Measures

Personal Precautions: Extremely flammable. Spillages of liquid product will create a fire hazard and may form an explosive atmosphere. Keep all sources of ignition and hot metal surfaces away from spill/release if safe to do so. The use of explosion-proof electrical equipment is recommended. Contains poisonous hydrogen sulfide gas. If the presence of dangerous amounts of H2S around the spilled product is suspected, additional or special actions may be warranted, including access restrictions and use of protective equipment. Stay upwind and away from spill/release. Avoid direct contact with material. For large spillages, notify persons down wind of the spill/release, isolate immediate hazard area and keep unauthorized personnel out. Wear appropriate protective equipment, including respiratory protection, as conditions warrant (see Section 8). See Sections 2 and 7 for additional information on hazards and precautionary measures.

Environmental Precautions: Stop spill/release if it can be done safely. Prevent spilled material from entering sewers, storm drains, other unauthorized drainage systems, and natural waterways. Use foam on spills to minimize vapors. Use water sparingly to minimize environmental contamination and reduce disposal requirements. If spill occurs on water notify appropriate authorities and advise shipping of any hazard. Spills into or upon navigable waters, the contiguous zone, or adjoining shorelines that cause a sheen or discoloration on the surface of the water, may require notification of the National Response Center (phone number 800-424-8802).

Methods for Containment and Clean-Up: Notify relevant authorities in accordance with all applicable regulations. Immediate cleanup of any spill is recommended. Dike far ahead of spill for later recovery or disposal. Absorb spill with inert material such as sand or vermiculite, and place in suitable container for disposal. If spilled on water remove with appropriate methods (e.g. skimming, booms or absorbents). In case of soil contamination, remove contaminated soil for remediation or disposal, in accordance with local regulations.

Recommended measures are based on the most likely spillage scenarios for this material; however local conditions and regulations may influence or limit the choice of appropriate actions to be taken.

Section 7: Handling and Storage

Precautions for safe handling: Keep away from ignition sources such as heat/sparks/open flame – No smoking. Take precautionary measures against static discharge. Nonsparking tools should be used. Do not handle until all safety precautions have been read and understood. Obtain special instructions before use. Wear protective gloves/clothing and eye/face protection. May contain or release dangerous levels of hydrogen sulfide. Use only outdoors or in well-ventilated area. Avoid breathing vapors or mists. Wash thoroughly after handling. Use good personal hygiene practices and wear appropriate personal protective equipment (see section 8).

Extremely Flammable. May vaporize easily at ambient temperatures. The vapor is heavier than air and may create an explosive mixture of vapor and air. Beware of accumulation in confined spaces and low lying areas. Open container slowly to relieve any pressure. Electrostatic charge may accumulate and create a hazardous condition when handling or processing this material. To avoid fire or explosion, dissipate static electricity during transfer by grounding and bonding containers and equipment before transferring material. The use of explosion-proof electrical equipment is recommended and may be required (see appropriate fire codes). Refer to NFPA-70 and/or API RP 2003 for specific bonding/grounding requirements. Do not enter confined spaces such as tanks or pits without following proper entry procedures such as ASTM D-4276 and 29CFR 1910.146. Do not wear contaminated clothing or shoes. Keep contaminated clothing away from sources of ignition such as sparks or open flames.

Mercury and other heavy metals may be present in trace quantities in crude oil, raw natural gas, and condensates. Production and processing of these materials can lead to "drop-out" of elemental mercury in enclosed vessels and pipe work, typically at the low point of any process equipment because of its density. Mercury may also occur in other process system deposits such as sludges, sands, scales, waxes, and filter media. Personnel engaged in work with equipment where mercury deposits might occur (confined space entry, sampling, opening drain valves, draining process lines, etc), may be exposed to a mercury hazard (see sections 3 and 8).

Static Accumulation Hazard: Electrostatic charge may accumulate and create a hazardous condition when handling this material. To minimize this hazard, bonding and grounding of tanks, transfer piping, and storage tank level floats are necessary but may not, by themselves, be sufficient. Review all operations which have the potential of generating and accumulating an electrostatic charge and/or a flammable atmosphere (including tank and container filling, splash filling, tank cleaning, sampling, gauging, switch loading, filtering, mixing, agitation, and vacuum truck operations) and use appropriate mitigating procedures. Special care should be given to ensure that special slow load procedures for "switch loading" are followed to avoid the static ignition hazard that can exist when higher flash point material (such as fuel oil or diesel) is loaded into tanks previously containing low flash point products (such as gasoline or naphtha). For more information, refer to OSHA Standard 29 CFR 1910.106, 'Flammable and Combustible Liquids', National Fire Protection Association (NFPA 77, 'Recommended Practice on Static Electricity', and/or the American Petroleum Institute (API) Recommended Practice 2003, 'Protection Against Ignitions Arising Out of Static, Lightning, and Stray Currents'.

Conditions for safe storage: This material may contain or release poisonous hydrogen sulfide gas. In a tank, barge, or other closed container, the vapor space above this material may accumulate hazardous concentrations of hydrogen sulfide. Check atmosphere for oxygen content, H2S, and flammability prior to entry. Keep container(s) tightly closed and properly labeled. Use and store this material in cool, dry, well-ventilated areas away from heat, direct sunlight, hot metal surfaces, and all sources of ignition. Store only in approved containers. Post area "No Smoking or Open Flame." Keep away from any incompatible material (see Section 10). Protect container(s) against physical damage. Outdoor or detached storage is preferred. Indoor storage should meet OSHA standards and appropriate fire codes.

"Empty" containers retain residue and may be dangerous. Do not pressurize, cut, weld, braze, solder, drill, grind, or expose such containers to heat, flame, sparks, or other sources of ignition. They may explode and cause injury or death. "Empty" drums should be completely drained, properly bunged, and promptly shipped to the supplier or a drum reconditioner. All containers should be disposed of in an environmentally safe manner and in accordance with governmental regulations. Before working on or in tanks which contain or have contained this material, refer to OSHA regulations, ANSI Z49.1, and other references pertaining to cleaning, repairing, welding, or other contemplated operations.

Section 8: Exposure Controls / Personal Protection

Component	ACGIH	OSHA	Other
Natural Gas Condensate ..C2-20	TWA: 300 ppm (as Gasoline)	TWA: 400 mg/m^3 TWA: 100 ppm	0.5 ppm TWA8hr (as benzene) 0.25 ppm TWA12hr (as benzene) 2.5 ppm STEL (as benzene) (American Energy Guidelines)
Toluene	TWA: 20 ppm	Ceiling: 300 ppm TWA: 200 ppm	---
Hydrogen Sulfide	STEL: 5 ppm TWA: 1 ppm	Ceiling: 20 ppm	TWA: 5 ppm 8hr TWA: 2.5 ppm 12hr STEL: 15 ppm (American Energy Guidelines)
Benzene	STEL: 2.5 ppm TWA: 0.5 ppm Skin	Ceiling: 25 ppm STEL: 5 ppm TWA: 10 ppm TWA: 1 ppm	---

Note: State, local or other agencies or advisory groups may have established more stringent limits. Consult an industrial hygienist or similar professional, or your local agencies, for further information.

Engineering controls: If current ventilation practices are not adequate to maintain airborne concentrations below the established exposure limits, additional engineering controls may be required.

Eye/Face Protection: The use of eye protection that meets or exceeds ANSI Z.87.1 is recommended to protect against potential eye contact, irritation, or injury. Depending on conditions of use, a face shield may be necessary.

Skin/Hand Protection: The use of gloves impervious to the specific material handled is advised to prevent skin contact. Users should check with manufacturers to confirm the breakthrough performance of their products. Depending on exposure and use conditions, additional protection may be necessary to prevent skin contact including use of items such as chemical resistant boots, aprons, arm covers, hoods, coveralls, or encapsulated suits. Suggested protective materials: Nitrile

Respiratory Protection: A NIOSH approved, self-contained breathing apparatus (SCBA) or equivalent operated in a pressure demand or other positive pressure mode should be used in situations of oxygen deficiency (oxygen content less than 19.5 percent), unknown exposure concentrations, or situations that are immediately dangerous to life or health (IDLH).

A respiratory protection program that meets or is equivalent to OSHA 29 CFR 1910.134 and ANSI Z88.2 should be followed whenever workplace conditions warrant a respirator's use.

If benzene concentrations equal or exceed applicable exposure limits, OSHA requirements for personal protective equipment, exposure monitoring, and training may apply (29CFR1910.1028 - Benzene).

Workplace monitoring plans should consider the possibility that heavy metals such as mercury may concentrate in processing vessels and equipment presenting the possibility of exposure during various sampling and maintenance operations. Implement appropriate respiratory protection and the use of other protective equipment as dictated by monitoring results (See Sections 2 and 7).

Other Protective Equipment: Eye wash and quick-drench shower facilities should be available in the work area. Thoroughly clean shoes and wash contaminated clothing before reuse.

Suggestions provided in this section for exposure control and specific types of protective equipment are based on readily available information. Users should consult with the specific manufacturer to confirm the performance of their protective equipment. Specific situations may require consultation with industrial hygiene, safety, or engineering professionals.

Section 9: Physical and Chemical Properties

Note: Unless otherwise stated, values are determined at 20°C (68°F) and 760 mm Hg (1 atm). Data represent typical values and are not intended to be specifications.

Appearance:	Amber to dark brown
Physical Form:	Liquid
Odor:	Rotten egg / sulfurous; Petroleum.
Odor Threshold:	No data
pH:	Not applicable
Vapor Pressure:	5-15 psia (Reid VP) @ 100°F / 37.8°C
Vapor Density (air=1):	1
Initial Boiling Point/Range:	-20 to 800 °F / -29 to 427 °C
Melting/Freezing Point:	No data
Solubility in Water:	Negligible
Partition Coefficient (n-octanol/water) (Kow):	No data
Specific Gravity (water=1):	0.6 - 0.8 @ 60ºF (15.6ºC)
Bulk Density:	6.25 lbs/gal
VOC Content(%):	50
Evaporation Rate (nBuAc=1):	1
Flash Point:	-51 °F / -46 °C
Test Method:	Pensky-Martens Closed Cup (PMCC), ASTM D93, EPA 1010
Lower Explosive Limits (vol % in air):	1.1
Upper Explosive Limits (vol % in air):	6.0
Auto-ignition Temperature:	590 °F / 310 °C

Section 10: Stability and Reactivity

Stability: Stable under normal ambient and anticipated conditions of use.

Conditions to Avoid: Avoid high temperatures and all sources of ignition. Prevent vapor accumulation.

Materials to Avoid (Incompatible Materials): Avoid contact with strong oxidizing agents and strong reducing agents.

Hazardous Decomposition Products: Not anticipated under normal conditions of use.

Hazardous Polymerization: Not known to occur.

Section 11: Toxicological Information

Information on Toxicological Effects of Substance/Mixture

Acute Toxicity	Hazard	Additional Information	LC50/LD50 Data
Inhalation	Harmful if inhaled	Contains poisonous hydrogen sulfide gas. See Signs and Symptoms.	10 mg/L (vapor, estimated)
Skin Absorption	Unlikely to be harmful		> 2 g/kg
Ingestion (Swallowing)	Unlikely to be harmful		> 5 g/kg

Aspiration Hazard: May be fatal if swallowed and enters airways.

Skin Corrosion/Irritation: Causes skin irritation. Repeated exposure may cause skin dryness or cracking.

Serious Eye Damage/Irritation: Causes mild eye irritation. .

Signs and Symptoms: Effects of overexposure can include slight irritation of the respiratory tract, nausea, vomiting, and signs of nervous system depression (e.g., headache, drowsiness, dizziness, loss of coordination, disorientation and fatigue). Continued exposure to high concentrations can result in vomiting, cardiac irregularities and sudden loss of consciousness.

This material contains hydrogen sulfide, a poisonous gas with the smell of rotten eggs. The smell disappears rapidly because of olfactory fatigue so odor may not be a reliable indicator of exposure. Effects of overexposure include irritation of the eyes, nose, throat and respiratory tract, blurred vision, photophobia (sensitivity to light), and pulmonary edema (fluid accumulation in the lungs). Severe exposures can result in nausea, vomiting, muscle weakness or cramps, headache, disorientation and other signs of nervous system depression, irregular heartbeats, convulsions, respiratory failure, and death.

Skin Sensitization: Not expected to be a skin sensitizer.

Respiratory Sensitization: No information available.

Specific Target Organ Toxicity (Single Exposure): May cause drowsiness and dizziness.

Specific Target Organ Toxicity (Repeated Exposure): Not expected to cause organ effects from repeated exposure.

Carcinogenicity: May cause cancer

Germ Cell Mutagenicity: Not expected to cause heritable genetic effects.

Reproductive Toxicity: Not expected to cause reproductive toxicity.

Information on Toxicological Effects of Components

Natural Gas Condensate ..C2-20

Carcinogenicity: Two year inhalation studies of vaporized unleaded gasoline produced an increased incidence of kidney tumors in male rats and liver tumors in female mice. Repeated skin application of various petroleum naphthas in mice for two years resulted in an increased incidence of skin tumors but only in the presence of severe skin irritation. Follow-up mechanistic studies suggest that the occurrence of these tumors may be the consequence of promotional processes and not relevant to human risk assessment. Epidemiology data collected from a study of more than 18,000 petroleum marketing and distribution workers showed no increased risk of leukemia, multiple myeloma, or kidney cancer from gasoline exposure. Unleaded gasoline has been identified as a possible carcinogen by the International Agency for Research on Cancer.

Target Organs: Two year inhalation studies of wholly vaporized unleaded gasoline, and 90 days studies of various petroleum naphthas, did not produce significant target organ toxicity in laboratory animals. Nephropathy in male rats, characterized by the accumulation of alpha-2-u- globulin in epithelial cells of the proximal tubules was observed, however follow-up studies suggest that these changes are unique to the male rat.

Reproductive Toxicity: No evidence of developmental toxicity was found in pregnant laboratory animals (rats and mice) exposed to high vapor concentrations of unleaded gasoline and petroleum naphthas via inhalation. A two-generation reproductive toxicity study of vapor recovery gasoline did not adversely affect reproductive function or offspring survival and development.

Xylenes

Target Organs: Rats exposed to xylenes at 800, 1000 or 1200 ppm 14 hours daily for 6 weeks demonstrated high frequency hearing loss. Another study in rats exposed to 1800 ppm 8 hours daily for 5 days demonstrated middle frequency hearing loss.

Reproductive Toxicity: Both mixed xylenes and the individual isomers produced limited evidence of developmental toxicity in laboratory animals. Inhalation and oral administration of xylene resulted in decreased fetal weight, increased incidences of delayed ossification, skeletal variations and resorptions, but no evidence of teratogenicity.

Toluene

Carcinogenicity: Exposure of rats and mice to toluene at concentrations ranging from 120-1200 ppm for two years did not demonstrate evidence of carcinogenicity. Toluene has not been listed as a carcinogen by IARC.

Target Organs: Epidemiology studies suggest that chronic occupational overexposure to toluene may damage color vision. Subchronic and chronic inhalation studies with toluene produced kidney and liver damage, hearing loss and central nervous system (brain) damage in laboratory animals. Intentional misuse by deliberate inhalation of high concentrations of toluene has been shown to cause liver, kidney, and central nervous system damage, including hearing loss and visual disturbances.

Reproductive Toxicity: Exposure to toluene during pregnancy has demonstrated limited evidence of developmental toxicity in laboratory animals. Decreased fetal body weight and increased skeletal variations in both inhalation and oral studies, but only at doses that were maternally toxic. No fetal toxicity was seen at doses that were not maternally toxic. Decreased sperm counts have been observed in male rats in the absence of a reduction in fertility. Toluene has been reported to cause mental or growth retardation in the children of solvent abusers who directly inhale toluene during pregnancy.

Cyclohexane

Reproductive Toxicity: Two-generation reproduction and developmental toxicity studies using rats and rabbits exposed (whole-body) to atmospheric concentrations up to 7000 ppm cyclohexane did not detect evidence of developmental toxicity in either species.

Benzene

Carcinogenicity: Benzene is an animal carcinogen and is known to produce acute myelogenous leukemia (a form of cancer) in humans. Benzene has been identified as a human carcinogen by IARC, the US National Toxicology Program and the US-Occupational Safety and Health Administration.

Target Organs: Prolonged or repeated exposures to benzene vapors can cause damage to the blood and blood forming organs, including disorders like leukopenia, thrombocytopenia, and aplastic anemia.

Reproductive Toxicity: Some studies in occupationally exposed women have suggested benzene exposure increased risk of miscarriage and stillbirth and decreased birth weight and gestational age. The size of the effects detected in these studies was small, and ascertainment of exposure and outcome in some cases relied on self-reports, which may limit the reliability of these results.

Germ Cell Mutagenicity: Benzene exposure has resulted in chromosomal aberrations in human lymphocytes and animal bone marrow cells. Exposure has also been associated with chromosomal aberrations in sperm cells in human and animal studies.

n-Hexane

Target Organs: Excessive exposure to n-hexane can result in peripheral neuropathies. The initial symptoms are symmetrical sensory numbness and paresthesias of distal portions of the extremities. Motor weakness is typically observed in muscles of the toes and fingers but may also involve muscles of the arms, thighs and forearms. The onset of these symptoms may be delayed for several months to a year after the beginning of exposure. The neurotoxic properties of n-hexane are potentiated by exposure to methyl ethyl ketone and methyl isobutyl ketone.

Reproductive Toxicity: Prolonged exposure to high concentrations of n-hexane (>1,000 ppm) resulted in decreased sperm count and degenerative changes in the testes of rats but not those of mice.

Ethyl Benzene
Carcinogenicity: Rats and mice exposed to 0, 75, 250, or 750 ppm ethyl benzene in a two year inhalation study demonstrated limited evidence of kidney, liver, and lung cancer. Ethyl benzene has been listed as a possible human carcinogen by IARC.
Target Organs: In rats and mice exposed to 0, 75, 250, or 750 ppm ethyl benzene in a two year inhalation study there was mild damage to the kidney (tubular hyperplasia), liver (eosinophilio foci, hypertrophy, necrosis), lung (alveolar epithelium metaplasia), thyroid (hyperplasia), thyroid (hyperplasia) and pituitary (hyperplasia). In animal models (particularly rats), ethyl benzene affects the auditory function mainly in the cochlear mid-frequency range and ototoxicity was observed after combined exposure to noise and ethyl benzene. There is no evidence of either ethyl benzene-induced hearing losses or ototoxicity with combined exposure to ethyl benzene and noise in workers.

Section 12: Ecological Information

Toxicity: Acute aquatic toxicity studies on samples of gasoline and naphtha streams show acute toxicity values greater than 1 mg/L and mostly in the range 1-100 mg/L. These tests were carried out on water accommodated fractions, in closed systems to prevent evaporative loss. Results are consistent with the predicted aquatic toxicity of these substances based on their hydrocarbon composition. These substances should be regarded as toxic to aquatic organisms, with the potential to cause long term adverse effects in the aquatic environment. Classification: H411; Chronic Cat 2.

Persistence and Degradability: The hydrocarbons in this material are not readily biodegradable but are regarded as inherently biodegradable since their hydrocarbon components can be degraded by microorganisms.

Bioaccumulative Potential: Log Kow values measured for the hydrocarbon components of this material range from 3 to greater than 6 and therefore are regarded as having the potential to bioaccumulate. In practice, metabolic processes or physical properties may prevent this effect or limit bioavailability.

Mobility in Soil: On release to water, hydrocarbons will float on the surface and since they are sparingly soluble, the only significant loss is volatilization to air. In air, these hydrocarbons are photodegraded by reaction with hydroxyl radicals with half lives varying from 6.5 days for benzene to 0.5 days for n-dodecane.

Other Adverse Effects: None anticipated.

Section 13: Disposal Considerations

The generator of a waste is always responsible for making proper hazardous waste determinations and needs to consider state and local requirements in addition to federal regulations.

This material, if discarded as produced, would not be a federally regulated RCRA "listed" hazardous waste. However, it would likely be identified as a federally regulated RCRA hazardous waste for the following characteristic(s) shown below. See Sections 7 and 8 for information on handling, storage and personal protection and Section 9 for physical/chemical properties. It is possible that the material as produced contains constituents which are not required to be listed in the MSDS but could affect the hazardous waste determination. Additionally, use which results in chemical or physical change of this material could subject it to regulation as a hazardous waste.

Container contents should be completely used and containers should be emptied prior to discard. Container residues and rinseates could be considered to be hazardous wastes.

EPA Waste Number(s)
- D001 - Ignitability characteristic
- D018 - Toxicity characteristic (Benzene)

Section 14: Transport Information

U.S. Department of Transportation (DOT)

Shipping Description:

If vapor pressure is > 300 kPa (43.5 psia) at 50° C (122° F) and H2S is > 8.8 molar % shipping description is:
UN3160, Liquefied gas, toxic, flammable, n.o.s., (Hydrogen sulfide; ,; Liquefied Petroleum Gas), 2.3,; , (2.1), Inhalation Hazard Zone ***X***
If vapor pressure is > 300 kPa (43.5 psia) at 50° C (122° F) and H2S is < 8.8 molar % shipping description is:
UN1965, Hydrocarbon gas mixture, liquefied, n.o.s., 2.1
If vapor pressure is <= 300 kPa (43.5 psia) at 50° C (122° F) and H2S is < 8.8 molar % shipping description is:
UN1267, Petroleum crude oil, 3, I ***or*** II [**I** if BP < 35° C (95° F); **II** if BP > 35° C]

Non-Bulk Package Marking:

Must be consistent with shipping description, either:
Liquefied gas, toxic, flammable, n.o.s., (Hydrogen sulfide, Liquefied petroleum gas), UN3160
or
Hydrocarbon gas mixture, liquefied, n.o.s., UN1965
or
Petroleum crude oil, UN1267

Non-Bulk Package Labeling:

For UN3160: Poison gas and Flammable gas
For UN1965: Flammable gas
For UN1267: Flammable liquid

Bulk Package/Placard Marking:

For UN3160: Poison gas / 3160 and Flammable gas
For UN1965: Flammable gas / 1965
For UN1267: Flammable / 1267

Packaging - References:

For UN3160: None; 49 CFR 173.304; 173.314 & .315
For UN1965: 49 CFR: 173.306; 173.304; 173.314 & .315
For UN1267: 49 CFR 173.150; 173.201; 173.243 ***[PG I]***
-or-
49 CFR 173.150; 173.202; 173.242 ***[PG II]***
(Exceptions; Non-bulk; Bulk)

Hazardous Substance:

The EPA's Petroleum Exclusion applies to Section 2 and/or 15 components which are listed in 49 CFR 172.101, Table 1 to Appendix A.

Emergency Response Guide:

UN3160 - 119; ***UN1965 -*** 115; ***UN1267 -*** 128;

Note:

Replace ***X*** in shipping description with:
D if Molar % H2S is from 8.8% to 14.8%
C if Molar % H2S is from 14.9% to 44.4%
B if Molar % H2S is from 44.5% to 100.0%
Container(s) greater than 5 liters (liquids) or 5 kilograms (solids), shipped by water mode and ALL bulk shipments may require the shipping description to contain the "Marine Pollutant" notation [49 CFR 172.203(l)] and the container(s) to display the [Marine Pollutant Mark] [49 CFR 172.322].

The following alternate shipping description order may be used until January 1, 2013:
Proper Shipping name, Hazard Class or Division, (Subsidiary Hazard if any), UN or NA number, Packing Group
Other shipping description elements may be required for DOT compliance.
Transport in bulk according to Annex II of MARPOL 73/78 and the IBC Code: *Not applicable*

International Maritime Dangerous Goods (IMDG)

Shipping Description:

If vapor pressure is > 300 kPa (43.5 psia) at 50° C (122° F) and H2S is > 8.8 molar % shipping description is:
UN3160, Liquefied gas, toxic, flammable, n.o.s (Hydrogen sulphide , Liquefied Petroleum Gas), 2.3,; , (2.1)
If vapor pressure is > 300 kPa (43.5 psia) at 50° C (122° F) and H2S is < 8.8 molar % shipping description is:
UN1965, Hydrocarbon gas mixture, liquefied, n.o.s., (Hydrogen sulphide, Liquefied petroleum gas), 2.1;
If vapor pressure is <= 300 kPa (43.5 psia) at 50° C (122° F) and H2S is < 8.8 molar % shipping description is:
UN1267, Petroleum crude oil, 3, I ***or*** II [**I** if IBP < 35° C (95° F); **II** if IBP > 35° C] (-46° C);

Non-Bulk Package Marking:

Must be consistent with shipping description, either:
Liquefied gas, toxic, flammable, n.o.s., (Hydrogen sulphide, Liquefied petroleum gas), UN3160
or
Hydrocarbon gas mixture, liquefied, n.o.s., (Hydrogen sulphide, Liquefied petroleum gas), UN1965
or
Petroleum crude oil, UN1267

Labels:

For UN3160: Toxic gas and Flammable gas
For UN1965: Flammable gas
For UN1267: Flammable liquid

Placards/Marking (Bulk):

For UN3160: Toxic gas / 3160 and Flammable gas
For UN1965: Flammable gas / 1965
For UN1267: Flammable / 1267

Packaging - Non-Bulk:

For UN3160 & UN1965: P200
For UN1267: P001

EMS:

For UN3160 & UN1965: F-D, S-U
For UN1267: F-E, S-E

Note:

If container(s) is greater than 5 liters (liquids) or 5 kilograms (solids), shipment may require the shipping description to contain the "Marine Pollutant" description [IMDG 5.4.1.4.3.5] and the container(s) to display the Marine Pollutant mark [IMDG 5.2.1.6]. U.S. DOT compliance requirements may apply. See 49 CFR 171.22, 23 & 25. If transported in bulk by marine vessel in international waters, product is being carried under the scope of MARPOL Annex I.

International Civil Aviation Org. / International Air Transport Assoc. (ICAO/IATA)

UN/ID #:

UN3160 - ***Forbidden***
UN1965 ***or*** UN1267

Proper Shipping Name:

For UN1965: Hydrocarbon gas mixture, liquefied, n.o.s. (Liquefied petroleum gas, Hydrogen sulphide)
For UN1267: Petroleum crude oil

Hazard Class/Division:

For UN1965: 2.1
For UN1267: 3

Subsidiary risk:

None

Packing Group:

For UN1965: None
For UN1267: I ***or*** II ***[Determined by IATA 3.3.2]***

Non-Bulk Package Marking:

For UN1965: Hydrocarbon gas mixture, liquefied, n.o.s. (Liquefied petroleum gas, Hydrogen sulphide), UN1965
For UN1267: Petroleum crude oil, UN1267

Labels:

For UN1965: Flammable gas , Cargo Aircraft Only
For UN1267: Flammable liquid

ERG Code:

For UN1965: 10L ***or For UN1267:*** 3L

LTD. QTY	Passenger Aircraft	Cargo Aircraft Only

Packaging Instruction #:	***UN1965 -*** Forbidden ***UN1267 -*** Forbidden - ***[PG I]*** Y341 - ***[PG II]***	***UN1965 -*** *Forbidden* ***UN1267 -*** 351 - ***[PG I]*** 353 - ***[PG II]***	***UN1965 -*** 200 ***UN1267 -*** 361 - ***[PG I]*** 364 - ***[PG II]***
Max. Net Qty. Per Package:	***UN1267 -*** None (PG I); 1L (PG II)	***UN1267 -*** 1L - ***[PG I]*** 5 L - ***[PG II]***	***UN1965 -*** 150 kg ***UN1267 -*** 30 L - ***[PG I]*** 60 L - ***[PG II]***

Section 15: Regulatory Information

CERCLA/SARA - Section 302 Extremely Hazardous Substances and TPQs (in pounds):
This material contains the following chemicals subject to the reporting requirements of SARA 302 and 40 CFR 372:

Component	TPQ	EPCRA RQ
Hydrogen Sulfide	500 lb	100 lb

CERCLA/SARA - Section 311/312 (Title III Hazard Categories)

Acute Health: Yes
Chronic Health: Yes
Fire Hazard: Yes
Pressure Hazard: No
Reactive Hazard: No

CERCLA/SARA - Section 313 and 40 CFR 372:
This material contains the following chemicals subject to the reporting requirements of Section 313 of SARA Title III and 40 CFR 372:

Component	Concentration[1]	de minimis
Xylenes	1-8	1.0%
Toluene	1-7	1.0%
Cyclohexane	1-5	1.0%
Benzene	<5	0.1%
n-Hexane	2-4	1.0%
Ethyl Benzene	1-3	0.1%

EPA (CERCLA) Reportable Quantity (in pounds):
EPA's Petroleum Exclusion applies to this material - (CERCLA 101(14)).

California Proposition 65:
Warning: This material may contain detectable quantities of the following chemicals, known to the State of California to cause cancer, birth defects or other reproductive harm, and which may be subject to the warning requirements of California Proposition 65 (CA Health & Safety Code Section 25249.5):

Component	Type of Toxicity
Toluene	Developmental Toxicant Female Reproductive Toxicant
Benzene	Cancer Developmental Toxicant Male Reproductive Toxicant
Ethyl Benzene	Cancer

International Hazard Classification

Canada:
This product has been classified in accordance with the hazard criteria of the Controlled Products Regulations (CPR) and the MSDS contains all the information required by the Regulations.

WHMIS Hazard Class:
B2 - Flammable Liquids
D2A
D2B

National Chemical Inventories
All components are either listed on the US TSCA Inventory, or are not regulated under TSCA
All components are either on the DSL, or are exempt from DSL listing requirements

U.S. Export Control Classification Number: 1C981

Section 16: Other Information

Date of Issue:	20-Sep-2014
Status:	FINAL
Previous Issue Date:	20-Sep-2014
Revised Sections or Basis for Revision:	Identified Hazards (Section 2) Precautionary Statement(s) (Section 2) First Aid (Section 4) Exposure limits (Section 8) Shipping information (Section 14) Regulatory information (Section 15)
SDS Number:	730370

Guide to Abbreviations:
ACGIH = American Conference of Governmental Industrial Hygienists; CASRN = Chemical Abstracts Service Registry Number; CEILING = Ceiling Limit (15 minutes); CERCLA = The Comprehensive Environmental Response, Compensation, and Liability Act; EPA = Environmental Protection Agency; GHS = Globally Harmonized System; IARC = International Agency for Research on Cancer; INSHT = National Institute for Health and Safety at Work; IOPC = International Oil Pollution Compensation; LEL = Lower Explosive Limit; NE = Not Established; NFPA = National Fire Protection Association; NTP = National Toxicology Program; OSHA = Occupational Safety and Health Administration; PEL = Permissible Exposure Limit (OSHA); SARA = Superfund Amendments and Reauthorization Act; STEL = Short Term Exposure Limit (15 minutes); TLV = Threshold Limit Value (ACGIH); TWA = Time Weighted Average (8 hours); UEL = Upper Explosive Limit; WHMIS = Worker Hazardous Materials Information System (Canada)

Disclaimer of Expressed and implied Warranties:
The information presented in this Material Safety Data Sheet is based on data believed to be accurate as of the date this Material Safety Data Sheet was prepared. HOWEVER, NO WARRANTY OF MERCHANTABILITY, FITNESS FOR ANY PARTICULAR PURPOSE, OR ANY OTHER WARRANTY IS EXPRESSED OR IS TO BE IMPLIED REGARDING THE ACCURACY OR COMPLETENESS OF THE INFORMATION PROVIDED ABOVE, THE RESULTS TO BE OBTAINED FROM THE USE OF THIS INFORMATION OR THE PRODUCT, THE SAFETY OF THIS PRODUCT, OR THE HAZARDS RELATED TO ITS USE. No responsibility is assumed for any damage or injury resulting from abnormal use or from any failure to adhere to recommended practices. The information provided above, and the product, are furnished on the condition that the person receiving them shall make their own determination as to the suitability of the product for their particular purpose and on the condition that they assume the risk of their use. In addition, no authorization is given nor implied to practice any patented invention without a license.

AMERICAN ENERGY PARTNERS

Produced Brine Water

Safety Data Sheet

Section 1: Identification of the substance or mixture and of the supplier

Product Name:	Produced Brine Water
SDS Number:	401320
Intended Use:	Process Water
Manufacturer:	American Energy Partners 301 N.W. 63rd Oklahoma City, OK 73116
Emergency Health and Safety Number:	Chemtrec: 800-424-9300 (24 Hours)
SDS Information:	Phone: 844-210-6000 URL: www.americanenergypartners.com

Section 2: Hazard(s) Identification

Classification

H302 -- Harmful if swallowed -- Category 1
H319 -- Eye damage/irritation -- Category 2
H316 -- Causes mild skin irritation -- Category 1
H332 -- Harmful if inhaled -- Category 1
H350 -- Carcinogenicity -- Category 1A
H412 -- May cause chronic harmful effects to aquatic life -- Category 2

Label Elements

DANGER
Causes serious eye irritation. (H319)*
Harmful if swallowed. (H302)*
Harmful if inhaled. (H332)*
May cause cancer. (H350)*
Toxic to aquatic life with long lasting effects. (H412)*

Precautionary Statement(s):
Obtain special instructions before use. (P201)*
Do not handle until all safety precautions have been read and understood. (P202)*
Do not breathe dust/fume/gas/mist/vapours/spray. (P261)
Wash thoroughly after handling. (P264)*
Do not eat, drink, or smoke when using this product. (P270)*
Avoid release to the environment. (P273)*
Use outdoors in a well ventelated space (P271)
Wear protective gloves / protective clothing / eye protection. (P281)*
IF IN EYES: Rinse cautiously with water for several minutes. Remove contact lenses, if present and easy to do. Continue rinsing. (P305+P351+P338*)
If eye irritation persists: Get medical advice/attention. (P313)*
IF SWALLOWED: Immediately call a POISON CENTER or doctor/physician. (P301+P312)*
IF INHALED: Remove victim to fresh air and keep at rest in a position comfortable for breathing. (P304 + P340)*
Get medical advice/attention if you feel unwell. (P314)*
Collect spillage. (P391)*
Store locked up. (P405)*
Store in a well-ventilated place. Keep container tightly closed. (P403+P233)*
Dispose of contents/container to approved disposal facility. (P501)*

** (Applicable GHS hazard code.)*

Section 3: Composition / Information on Ingredients

Component	CAS#	Concentration[1]
Water	7732-18-5	80-100%
Sodium chloride	91-20-3	<20%
Benzene	71-43-2	<2%

All concentrations are percent by weight unless ingredient is a gas. Gas concentrations are in percent by volume.

Section 4: First Aid Measures

Eye Contact: For direct contact, remove contact lenses if present and easy to do. Immediately hold eyelids apart and flush the affected eye(s) with clean water for at least 20 minutes. Seek immediate medical attention.

Skin Contact: Remove contaminated shoes and clothing and cleanse affected area(s) thoroughly by washing with mild soap and water or a waterless hand cleaner. If irritation or redness develops and persists, seek medical attention.

Inhalation (Breathing): If respiratory symptoms develop, move victim away from source of exposure and into fresh air in a position comfortable for breathing. If breathing is difficult, oxygen or artificial respiration should be administered by qualified personnel. If symptoms persist, seek medical attention.

Ingestion (Swallowing): First aid is not normally required; however, if swallowed and symptoms develop, seek medical attention.

Most important symptoms and effects

Acute: Headache, drowsiness, dizziness, loss of coordination, disorientation and fatigue.

Delayed: Dry skin and possible irritation with repeated or prolonged exposure.

Notes to Physician: Federal regulations (29 CFR 1910.1028) specify medical surveillance programs for certain exposures to benzene above the action level or PEL (specified in Section (i)(1)(i) of the Standard). In addition, employees exposed in an emergency situation shall, as described in Section (i)(4)(i), provide a urine sample at the end of the shift for measurement of urine phenol.

Section 5: Fire-Fighting Measures

NFPA 704 Hazard Class

Health: 1 **Flammability:** 1 **Instability:** 0 (0-Minimal, 1-Slight, 2-Moderate, 3-Serious, 4-Severe)

Unusual Fire & Explosion Hazards: This material may burn, but will not ignite readily. If container is not properly cooled, it can rupture in the heat of a fire.

Extinguishing Media: Dry chemical, carbon dioxide, foam, or water spray is recommended. Water or foam may cause frothing of materials heated above 212°F / 100°C. Carbon dioxide can displace oxygen. Use caution when applying carbon dioxide in confined spaces. Simultaneous use of foam and water on the same surface is to be avoided as water destroys the foam.

Fire Fighting Instructions: For fires beyond the initial stage, emergency responders in the immediate hazard area should wear protective clothing. When the potential chemical hazard is unknown, in enclosed or confined spaces, a self contained breathing apparatus should be worn. In addition, wear other appropriate protective equipment as conditions warrant (see Section 8).

Isolate immediate hazard area and keep unauthorized personnel out. Stop spill/release if it can be done safely. Move undamaged containers from immediate hazard area if it can be done safely. Water spray may be useful in minimizing or dispersing vapors and to protect personnel. Cool equipment exposed to fire with water, if it can be done safely. Avoid spreading burning liquid with water used for cooling purposes.

Hazardous Combustion Products: Combustion may yield smoke, carbon monoxide, and other products of incomplete combustion. Oxides of nitrogen and sulfur may also be formed.

See Section 9 for Flammable Properties including Flash Point and Flammable (Explosive) Limits

Section 6: Accidental Release Measures

Personal Precautions: This material may burn, but will not ignite readily. Keep all sources of ignition away from spill/release. Stay upwind and away from spill/release. Avoid direct contact with material. For large spillages, notify persons down wind of the spill/release, isolate immediate hazard area and keep unauthorized personnel out. Wear appropriate protective equipment, including respiratory protection, as conditions warrant (see Section 8). See Sections 2 and 7 for additional information on hazards and precautionary measures.

Environmental Precautions: Stop spill/release if it can be done safely. Prevent spilled material from entering sewers, storm drains, other unauthorized drainage systems, and natural waterways. Use water sparingly to minimize environmental contamination and reduce disposal requirements. If spill occurs on water notify appropriate authorities and advise shipping of any hazard. Spills into or upon navigable waters, the contiguous zone, or adjoining shorelines that cause a sheen or discoloration on the surface of the water, may require notification of the National Response Center (phone number 800-424-8802).

Methods for Containment and Clean-Up: Notify relevant authorities in accordance with all applicable regulations. Immediate cleanup of any spill is recommended. Dike far ahead of spill for later recovery or disposal. Absorb spill with inert material such as sand or vermiculite, and place in suitable container for disposal. If spilled on water remove with appropriate methods (e.g. skimming, booms or absorbents). In case of soil contamination, remove contaminated soil for remediation or disposal, in accordance with local regulations.

Recommended measures are based on the most likely spillage scenarios for this material; however local conditions and regulations may influence or limit the choice of appropriate actions to be taken. See Section 13 for information on appropriate disposal.

Section 7: Handling and Storage

Precautions for safe handling: Keep away from flames and hot surfaces. Obtain special instructions before use. Do not handle until all safety precautions have been read and understood. Do not breathe vapors or mists. Wear protective gloves/clothing and eye/face protection. Wash thoroughly after handling. Use good personal hygiene practices and wear appropriate personal protective equipment (see section 8).

Do not enter confined spaces such as tanks or pits without following proper entry procedures such as ASTM D-4276 and 29CFR 1910.146. Do not wear contaminated clothing or shoes.

Conditions for safe storage: Keep container(s) tightly closed and properly labeled. This material may contain or release poisonous hydrogen sulfide gas. In a tank, barge, or other closed container, the vapor space above this material may accumulate hazardous concentrations of hydrogen sulfide. Check atmosphere for oxygen content, H2S, and flammability prior to entry. Use and store this material in cool, dry, well-ventilated area away from heat and all sources of ignition. Store only in approved containers. Keep away from any incompatible material (see Section 10). Protect container(s) against physical damage.

"Empty" containers retain residue and may be dangerous. Do not pressurize, cut, weld, braze, solder, drill, grind, or expose such containers to heat, flame, sparks, or other sources of ignition. They may explode and cause injury or death. "Empty" drums should be completely drained, properly bunged, and promptly shipped to the supplier or a drum reconditioner. All containers should be disposed of in an environmentally safe manner and in accordance with governmental regulations. Before working on or in tanks which contain or have contained this material, refer to OSHA regulations, ANSI Z49.1, and other references pertaining to cleaning, repairing, welding, or other contemplated operations.

Section 8: Exposure Controls / Personal Protection

Component	ACGIH	OSHA	NIOSH
Water (7732-18-5)	Not established	Not established	Not established
Sodium chloride (7647-14-5)	Not established	Not established	Not established
Benzene (71-43-2)	STEL: 2.5 ppm TWA: 0.5 ppm Skin	Ceiling: 25 ppm STEL: 5 ppm TWA: 1 ppm	STEL: 5 ppm TWA: 0.1 ppm

Note: State, local or other agencies or advisory groups may have established more stringent limits. Consult an industrial hygienist or similar professional, or your local agencies, for further information.

Engineering controls: If current ventilation practices are not adequate to maintain airborne concentrations below the established exposure limits, additional engineering controls may be required.

Eye/Face Protection: The use of eye protection (such as splash goggles) that meets or exceeds ANSI Z.87.1 is recommended when there is potential liquid contact to the eye. Depending on conditions of use, a face shield may be necessary.

Skin/Hand Protection: The use of gloves impervious to the specific material handled is advised to prevent skin contact. Users should check with manufacturers to confirm the breakthrough performance of their products. Suggested protective materials: Nitrile

Respiratory Protection: Where there is potential for airborne exposure above the exposure limit a NIOSH certified air purifying respirator equipped with organic vapor cartridges/canisters may be used.

A respiratory protection program that meets or is equivalent to OSHA 29 CFR 1910.134 and ANSI Z88.2 should be followed whenever workplace conditions warrant a respirator's use. Air purifying respirators provide limited protection and cannot be used in atmospheres that exceed the maximum use concentration (as directed by regulation or the manufacturer's instructions), in oxygen deficient (less than 19.5 percent oxygen) situations, or under conditions that are immediately dangerous to life and health (IDLH).

If benzene concentrations equal or exceed applicable exposure limits, OSHA requirements for personal protective equipment, exposure monitoring, and training may apply (29CFR1910.1028 - Benzene).

Other Protective Equipment: Eye wash and quick-drench shower facilities should be available in the work area. Thoroughly clean shoes and wash contaminated clothing before reuse.

Suggestions provided in this section for exposure control and specific types of protective equipment are based on readily available information. Users should consult with the specific manufacturer to confirm the performance of their protective equipment. Specific situations may require consultation with industrial hygiene, safety, or engineering professionals.

Section 9: Physical and Chemical Properties

Note: Unless otherwise stated, values are determined at 20°C (68°F) and 760 mm Hg (1 atm). Data represent typical values and are not intended to be specifications.

Appearance:	Varies (clear / amber / brown)
Physical Form:	Liquid
Odor:	Petroleum
Odor Threshold:	No data
pH:	4.9-8.5
Vapor Pressure:	No data available
Vapor Density (air=1):	>1
Initial Boiling Point/Range:	212 °F / 100 °C
Melting/Freezing Point:	32 °F / 0 °C
Pour Point:	No data
Solubility in Water:	Infinintely
Partition Coefficient (n-octanol/water) (Kow):	>10
Specific Gravity (water=1):	1.0 -1.1 °API
Viscosity:	No data available
Evaporation Rate (nBuAc=1):	No data available
Flash Point:	No data available
Test Method:	Not applicable
Lower Explosive Limits (vol % in air):	1%
Upper Explosive Limits (vol % in air):	46%
Auto-ignition Temperature:	No data available

Section 10: Stability and Reactivity

Stability: Stable under normal ambient and anticipated conditions of use.

Conditions to Avoid: Avoid all possible sources of ignition. Prevent vapor accumulation.

Materials to Avoid (Incompatible Materials): Avoid contact with strong oxidizing and reducing agents.

Hazardous Decomposition Products: Not anticipated under normal conditions of use.

Hazardous Polymerization: Not known to occur.

Section 11: Toxicological Information

Information on Toxicological Effects of Substance/Mixture

Acute Toxicity	Hazard	Additional Information	LC50/LD50 Data
Inhalation	Expected to have a low degree of toxicity by inhalation		No data
Skin Absorption	Unlikely to be harmful		No data
Ingestion (Swallowing)	Unlikely to be harmful		No data

Aspiration Hazard: Not expected to be an aspiration hazard.

Skin Corrosion/Irritation: Causes mild skin irritation. Repeated exposure may cause skin dryness or cracking.

Serious Eye Damage/Irritation: Causes serious eye irritation.

Signs and Symptoms: Effects of overexposure may include irritation of the digestive tract, irritation of the respiratory tract, nausea, vomiting, diarrhea and signs of nervous system depression (e.g., headache, drowsiness, dizziness, loss of coordination, disorientation and fatigue).

Skin Sensitization: Not expected to be a skin sensitizer.

Respiratory Sensitization: No information available.

Specific Target Organ Toxicity (Single Exposure): May cause drowsiness and dizziness.

Specific Target Organ Toxicity (Repeated Exposure): May cause damage to organs through prolonged or repeated exposure. Laboratory animal studies of hydrocarpon products by the dermal and inhalation exposure routes have demonstrated toxicity to the liver, blood, spleen and thymus

Carcinogenicity: May cause cancer, based on component information.

Germ Cell Mutagenicity: Inadequate information available.

Reproductive Toxicity: Inadequate information available.

Other Comments: This material may contain varying concentrations of polycyclic aromatic hydrocarbons (PAHs) which have been known to produce a phototoxic reaction when contaminated skin is exposed to sunlight. The effect is similar in appearance to an exaggerated sunburn, and is temporary in duration if exposure is discontinued. Continued exposure to sunlight can result in more serious skin problems including pigmentation (discoloration), skin eruptions (pimples), and possible skin cancers.

Information on Toxicological Effects of Components

Water
Carcinogenicity: No data available
Target Organs: No data available
Reproductive Toxicity: No data available
Germ Cell Mutagenicity: No data available

Sodium chloride
Carcinogenicity: No data available but sodium chloride has not been identified as a human carcinogen by IARC, the US National Toxicology Program and the US-Occupational Safety and Health Administration.
Target Organs: Eyes, respiratory system, central nervous system
Reproductive Toxicity: No data available
Germ Cell Mutagenicity: No data available

Benzene
Carcinogenicity: Benzene is an animal carcinogen and is known to produce acute myelogenous leukemia (a form of cancer) in humans. Benzene has been identified as a human carcinogen by IARC, the US National Toxicology Program and the US-Occupational Safety and Health Administration.
Target Organs: Prolonged or repeated exposures to benzene vapors can cause damage to the blood and blood forming organs, including disorders like leukopenia, thrombocytopenia, and aplastic anemia.
Reproductive Toxicity: Some studies in occupationally exposed women have suggested benzene exposure increased risk of miscarriage and stillbirth and decreased birth weight and gestational age. The size of the effects detected in these studies was small, and ascertainment of exposure and outcome in some cases relied on self-reports, which may limit the reliability of these results.
Germ Cell Mutagenicity: Benzene exposure has resulted in chromosomal aberrations in human lymphocytes and animal bone marrow cells. Exposure has also been associated with chromosomal aberrations in sperm cells in human and animal studies.

Section 12: Ecological Information

Toxicity: Not evaluated

Persistence and Degradability: Not evaluated

Persistence per IOPC Fund definition: Not evaluated

Bioaccumulative Potential: Not evaluated although the solubility and log KOW would indicate it has little bioaccumulative potential.

Mobility in Soil: Not evaluated although the solubility properties indicate produced water would be highly mobile throughout a system.

Other Adverse Effects: None anticipated.

Section 13: Disposal Considerations

The generator of a waste is always responsible for making proper hazardous waste determinations and needs to consider state and local requirements in addition to federal regulations.

This material, if discarded as produced, would not be a federally regulated RCRA "listed" hazardous waste. However, it would likely be identified as a federally regulated RCRA hazardous waste for the following characteristic(s) shown below. See Sections 7 and 8 for information on handling, storage and personal protection and Section 9 for physical/chemical properties. It is possible that the material as produced contains constituents which are not required to be listed in the MSDS but could affect the hazardous waste determination. Additionally, use which results in chemical or physical change of this material could subject it to regulation as a hazardous waste.

Container contents should be completely used and containers should be emptied prior to discard. Container residues and rinseates could be considered to be hazardous wastes.

EPA Waste Number(s)

- D018 - Toxicity characteristic (Benzene)

Section 14: Transport Information

U.S. Department of Transportation (DOT)

Shipping name: ***Not regulated***

Note: Some states may require specific shipping lables. Contact each jurisdiction for more information.

Section 15: Regulatory Information

CERCLA/SARA - Section 302 Extremely Hazardous Substances and TPQs (in pounds):
This material does not contain any chemicals subject to the reporting requirements of SARA 302 and 40 CFR 372.

CERCLA/SARA - Section 311/312 (Title III Hazard Categories)

Acute Health: Yes
Chronic Health: Yes
Fire Hazard: No
Pressure Hazard: No
Reactive Hazard: No

CERCLA/SARA - Section 313 and 40 CFR 372:
This material contains the following chemicals subject to the reporting requirements of Section 313 of SARA Title III and 40 CFR 372:

Component	Concentration[1]	de minimis
Benzene	<2	0.1%

EPA (CERCLA) Reportable Quantity (in pounds):
EPA's Petroleum Exclusion applies to this material - (CERCLA 101(14)).

Warning: This material may contain detectable quantities of the following chemicalsidentified on federal and individual state hazardouis substances list. Contact each jurisdiction for more information.

Component	Type of Toxicity
Benzene	Cancer Developmental Toxicant Male Reproductive Toxicant

International Hazard Classification:

Canada:
This product has been classified in accordance with the hazard criteria of the Controlled Products Regulations (CPR) and the MSDS contains all the information required by the Regulations.

WHMIS Hazard Class:
D2A
D2B

National Chemical Inventories
All components are either listed on the US TSCA Inventory, or are not regulated under TSCA
All components are either on the DSL, or are exempt from DSL listing requirements

U.S. Export Control Classification Number: 1C981

Section 16: Other Information

Date of Issue: 20-Sep-2014
Status: FINAL

Revised Sections or Basis for Revision:	Identified Hazards (Section 2) Precautionary Statement(s) (Section 2) First Aid (Section 4) Shipping information (Section 14) Regulatory information (Section 15)
SDS Number:	401320

Guide to Abbreviations:
ACGIH = American Conference of Governmental Industrial Hygienists; CASRN = Chemical Abstracts Service Registry Number; CEILING = Ceiling Limit (15 minutes); CERCLA = The Comprehensive Environmental Response, Compensation, and Liability Act; EPA = Environmental Protection Agency; GHS = Globally Harmonized System; IARC = International Agency for Research on Cancer; INSHT = National Institute for Health and Safety at Work; IOPC = International Oil Pollution Compensation; LEL = Lower Explosive Limit; NE = Not Established; NFPA = National Fire Protection Association; NTP = National Toxicology Program; OSHA = Occupational Safety and Health Administration; PEL = Permissible Exposure Limit (OSHA); SARA = Superfund Amendments and Reauthorization Act; STEL = Short Term Exposure Limit (15 minutes); TLV = Threshold Limit Value (ACGIH); TWA = Time Weighted Average (8 hours); UEL = Upper Explosive Limit; WHMIS = Worker Hazardous Materials Information System (Canada)

Disclaimer of Expressed and implied Warranties:
The information presented in this Material Safety Data Sheet is based on data believed to be accurate as of the date this Material Safety Data Sheet was prepared. HOWEVER, NO WARRANTY OF MERCHANTABILITY, FITNESS FOR ANY PARTICULAR PURPOSE, OR ANY OTHER WARRANTY IS EXPRESSED OR IS TO BE IMPLIED REGARDING THE ACCURACY OR COMPLETENESS OF THE INFORMATION PROVIDED ABOVE, THE RESULTS TO BE OBTAINED FROM THE USE OF THIS INFORMATION OR THE PRODUCT, THE SAFETY OF THIS PRODUCT, OR THE HAZARDS RELATED TO ITS USE. No responsibility is assumed for any damage or injury resulting from abnormal use or from any failure to adhere to recommended practices. The information provided above, and the product, are furnished on the condition that the person receiving them shall make their own determination as to the suitability of the product for their particular purpose and on the condition that they assume the risk of their use. In addition, no authorization is given nor implied to practice any patented invention without a license.

Attachment O

EMISSIONS SUMMARY SHEETS

Attachment O
G70-A EMISSION SUMMARY SHEET

Emission Point ID No. *(Must match Emission Units Table-& Plot Plan)*	Emission Point Type[1]	Emission Unit Vented Through This Point *(Must match Emission Units Table & Plot Plan)*		Air Pollution Control Device *(Must match Emission Units Table & Plot Plan)*		All Regulated Pollutants - Chemical Name/CAS[3] *(Speciate VOCs & HAPS)*	Maximum Potential Uncontrolled Emissions [4]		Maximum Potential Controlled Emissions [5]		Emission Form or Phase *(At exit conditions, Solid, Liquid or Gas/Vapor)*	Est. Method Used [6]
		ID No.	Source	ID No.	Device Type		lb/hr	ton/yr	lb/hr	ton/yr		
E01	Upward Vertical Stack	S01	GPU Burner	N/A	N/A	Total VOCs	<0.01	0.03	<0.01	0.03	Gas/Vapor	AP-42
						NO_x	0.12	0.51	0.12	0.51		
						CO	0.10	0.43	0.10	0.43		
						PM_{10}	<0.01	0.04	<0.01	0.04		
						Total HAPs	<0.01	0.01	<0.01	0.01		
						CO_2	175.47	768.54	175.47	768.54		
						CH_4	<0.01	0.01	<0.01	0.01		
						CO_2e	175.65	769.33	175.65	769.33		
E02	Upward Vertical Stack	S02	GPU Burner	N/A	N/A	Total VOCs	<0.01	0.03	<0.01	0.03	Gas/Vapor	AP-42
						NO_x	0.12	0.51	0.12	0.51		
						CO	0.10	0.43	0.10	0.43		
						PM_{10}	<0.01	0.04	<0.01	0.04		
						Total HAPs	<0.01	0.01	<0.01	0.01		
						CO_2	175.47	768.54	175.47	768.54		
						CH_4	<0.01	0.01	<0.01	0.01		
						CO_2e	175.65	769.33	175.65	769.33		
E03	Upward Vertical Stack	S03	GPU Burner	N/A	N/A	Total VOCs	<0.01	0.03	<0.01	0.03	Gas/Vapor	AP-42
						NO_x	0.12	0.51	0.12	0.51		
						CO	0.10	0.43	0.10	0.43		
						PM_{10}	<0.01	0.04	<0.01	0.04		
						Total HAPs	<0.01	0.01	<0.01	0.01		
						CO_2	175.47	768.54	175.47	768.54		
						CH_4	<0.01	0.01	<0.01	0.01		
						CO_2e	175.65	769.33	175.65	769.33		
E04	Upward Vertical Stack	S04	GPU Burner	N/A	N/A	Total VOCs	<0.01	0.03	<0.01	0.03	Gas/Vapor	AP-42
						NO_x	0.12	0.51	0.12	0.51		
						CO	0.10	0.43	0.10	0.43		
						PM_{10}	<0.01	0.04	<0.01	0.04		
						Total HAPs	<0.01	0.01	<0.01	0.01		
						CO_2	175.47	768.54	175.47	768.54		
						CH_4	<0.01	0.01	<0.01	0.01		
						CO_2e	175.65	769.33	175.65	769.33		
E05	Upward Vertical Stack	S05	GPU Burner	N/A	N/A	Total VOCs	<0.01	0.03	<0.01	0.03	Gas/Vapor	AP-42
						NO_x	0.12	0.51	0.12	0.51		
						CO	0.10	0.43	0.10	0.43		
						PM_{10}	<0.01	0.04	<0.01	0.04		
						Total HAPs	<0.01	0.01	<0.01	0.01		
						CO_2	175.47	768.54	175.47	768.54		
						CH_4	<0.01	0.01	<0.01	0.01		
						CO_2e	175.65	769.33	175.65	769.33		

Emission Point ID No. *(Must match Emission Units Table & Plot Plan)*	Emission Point Type[1]	Emission Unit Vented Through This Point *(Must match Emission Units Table & Plot Plan)*		Air Pollution Control Device *(Must match Emission Units Table & Plot Plan)*		All Regulated Pollutants - Chemical Name/CAS[3] *(Speciate VOCs & HAPS)*	Maximum Potential Uncontrolled Emissions [4]		Maximum Potential Controlled Emissions [5]		Emission Form or Phase *(At exit conditions, Solid, Liquid or Gas/Vapor)*	Est. Method Used [6]
		ID No.	Source	ID No.	Device Type		lb/hr	ton/yr	lb/hr	ton/yr		
E06	Upward Vertical Stack	S06	GPU Burner	N/A	N/A	Total VOCs NO_x CO PM_{10} Total HAPs CO_2 CH_4 CO_2e	<0.01 0.12 0.10 <0.01 <0.01 175.47 <0.01 175.65	0.03 0.51 0.43 0.04 0.01 768.54 0.01 769.33	<0.01 0.12 0.10 <0.01 <0.01 175.47 <0.01 175.65	0.03 0.51 0.43 0.04 0.01 768.54 0.01 769.33	Gas/Vapor	AP-42
E07	Upward Vertical Stacks	S07	Condensate Heater	N/A	None	Total VOCs NO_x CO PM_{10} CO_2 CH_4 CO_2e	<0.01 0.06 0.05 <0.01 87.73 <0.01 87.82	0.01 0.26 0.21 0.02 384.27 0.01 384.67	<0.01 0.06 0.05 <0.01 87.73 <0.01 87.82	0.01 0.26 0.21 0.02 384.27 0.01 384.67	Gas/Vapor	AP-42
E08	Upward Vertical Stacks	S08	Condensate Heater	N/A	None	Total VOCs NO_x CO PM_{10} CO_2 CH_4 CO_2e	<0.01 0.06 0.05 <0.01 87.73 <0.01 87.82	0.01 0.26 0.21 0.02 384.27 0.01 384.67	<0.01 0.06 0.05 <0.01 87.73 <0.01 87.82	0.01 0.26 0.21 0.02 384.27 0.01 384.67	Gas/Vapor	AP-42
E19	Upward Vertical Stacks	S19	Condensate - Truck Loading	N/A	N/A	Total VOCs CO_2e	0.09 0.06	0.39 0.27	<0.01 1.26	<0.01 5.50	Gas/Vapor	AP-42
E20	Upward Vertical Stacks	S20	Produced Water - Truck Loading	N/A	N/A	CO_2e	0.01	0.03	2.16	9.48	Gas/Vapor	AP-42
E21	Upward Vertical Stacks	S21	Enclosed Vapor Combustor	N/A	None	Total VOCs NO_x CO PM_{10} SO_2 Total HAPs Hexane CO_2 CH_4 N_2O CO_2e	3.75 <0.01 <0.01 <0.01 <0.01 0.14 0.12 <0.01 0.03 <0.01 0.69	16.40 <0.01 <0.01 <0.01 <0.01 0.63 0.52 <0.01 0.12 <0.01 3.03	0.16 1.62 1.36 0.12 0.01 0.03 0.03 2,206.26 0.04 <0.01 2,198.76	0.72 7.11 5.97 0.54 0.04 0.15 0.14 9,686.15 0.18 0.02 9,625.01	Gas/Vapor	AP-42

The EMISSION SUMMARY SHEET provides a summation of emissions by emission unit. Note that uncaptured process emission unit emissions are not typically considered to be fugitive and must be accounted for on the appropriate EMISSIONS UNIT DATA SHEET and on the EMISSIONS SUMMARY SHEET. Please note that total emissions from the source are equal to all vented emissions, all fugitive emissions, plus all other emissions (e.g. uncaptured emissions). Please complete the FUGITIVE EMISSIONS DATA SUMMARY SHEET for fugitive emission activities.

[1] Please add descriptors such as upward vertical stack, downward vertical stack, horizontal stack, relief vent, rain cap, etc.

[2] List all regulated air pollutants. Speciate VOCs, including all HAPs. Follow chemical name with Chemical Abstracts Service (CAS) number. **LIST** Acids, CO, CS_2, VOCs, H_2S, Inorganics, Lead, Organics, O_3, NO, NO_2, SO_2, SO_3, all applicable Greenhouse Gases (including CO_2 and methane), etc. **DO NOT LIST** H_2, H_2O, N_2, O_2, and Noble Gases
[3] Give maximum potential emission rate with no control equipment operating. If emissions occur for less than 1 hr, then record emissions per batch in minutes (e.g. 5 lb VOC/20 minute batch).
[4] Give maximum potential emission rate with proposed control equipment operating. If emissions occur for less than 1 hr, then record emissions per batch in minutes (e.g. 5 lb VOC/20 minute batch).
[5] Indicate method used to determine emission rate as follows: MB = material balance; ST = stack test (give date of test); EE = engineering estimate; M = modeling; O = other (specify).

G70-A FUGITIVE EMISSIONS SUMMARY SHEET

FUGITIVE EMISSIONS SUMMARY	All Regulated Pollutants -Chemical Name/CAS [1]	Maximum Potential Uncontrolled Emissions [2]		Maximum Potential Controlled Emissions [3]		Est. Method Used [4]
		lb/hr	ton/yr	lb/hr	ton/yr	
Haul Road/Road Dust Emissions Paved Haul Roads	**NA**	**--**	**--**	**--**	**--**	**--**
Unpaved Haul Roads	**PM** **PM-10** **PM-2.5**	**6.37** **1.62** **0.16**	**2.93** **0.75** **0.07**	**6.37** **1.62** **0.16**	**2.93** **0.75** **0.07**	**AP-42**
Equipment Leaks	**Total VOC** **Total HAPs** **CO_2** **CH_4** **CO_2e**	**0.10** **0.004** **0.002** **0.52** **12.97**	**0.45** **0.02** **0.01** **2.27** **56.79**	**0.10** **0.004** **0.002** **0.52** **12.97**	**0.45** **0.02** **0.01** **2.27** **56.79**	**40CFR98 Subpart W**
Other	**NA**	**NA**	**NA**	**NA**	**NA**	**NA**

[1] List all regulated air pollutants. Speciate VOCs, including all HAPs. Follow chemical name with Chemical Abstracts Service (CAS) number. LIST Acids, CO, CS_2, VOCs, H_2S, Inorganics, Lead, Organics, O_3, NO, NO_2, SO_2, SO_3, all applicable Greenhouse Gases (including CO_2 and methane), etc. DO NOT LIST H_2, H_2O, N_2, O_2, and Noble Gases.
[2] Give rate with no control equipment operating. If emissions occur for less than 1 hr, then record emissions per batch in minutes (e.g. 5 lb VOC/20 minute batch).
[3] Give rate with proposed control equipment operating. If emissions occur for less than 1 hr, then record emissions per batch in minutes (e.g. 5 lb VOC/20 minute batch).
[4] Indicate method used to determine emission rate as follows: MB = material balance; ST = stack test (give date of test); EE = engineering estimate; M = modeling; O = other (specify).