November 16, 2015

TECHNOLOGIES
98 VANADIUM ROAD
BUILDING D, 2nd FLOOR
BRIDGEVILLE, PA 15017
(412) 221-1100
(412) 257-6103 (FAX)
http://www.se-env.com

West Virginia Dept. of Environmental Protection
Division of Air Quality – Permitting Section
601 57th Street, SE
Charleston, WV 25304

RE: Application for Permit Modification
Spencer Well Pad Station
Plant No. 095-00021
Triad Hunter, LLC
Tyler County, West Virginia

To Whom It May Concern:

On behalf of our client, Triad Hunter Pipeline, LLC, we are pleased to submit one hard copy and two electronic copies of an Application for Modification to permit R13-3035A for its Spencer Well Pad Station in Tyler County near the community of Middlebourne. Triad Hunter wishes to replace one of the permitted natural gas compressors and associated driver engine. In addition, Triad Hunter is also seeking to replace certain emission control equipment and make several other minor revisions to the permit in order to better reflect current and projected operating conditions.

An application fee in the amount of $2,000 ($1,000 Permit Fee + $1,000 NSPS Fee) was determined to be applicable. A check, payable to WVDEP – Division of Air Quality is included in the pocket in the application with the original signature.

Triad Hunter is eager to begin operation of this additional equipment at the earliest practical date. Consequently, if there are any questions or concerns regarding this application, please contact me at 412/221-1100, x 1628 or rdhonau@se-env.com and we will provide any needed clarification or additional information immediately.

Sincerely,

Roger A. Dhonau, PE, QEP
Principal

Enclosures
Cc: Triad Hunter, LLC – Ryan Crowe

TRIAD HUNTER, LLC

APPLICATION FOR NSR PERMIT MODIFICATION

Spencer Well Pad Compressor Station
Tyler County, West Virginia

TECHNOLOGIES

98 Vanadium Road
Bridgeville, PA 15017
(412) 221-1100

APPLICATION FOR NSR PERMIT MODIFICATION

Triad Hunter, LLC

Spencer Well Pad Compressor Station

Tyler County, West Virginia

Table of Contents

SECTION I

Application Form

WEST VIRGINIA DEPARTMENT OF ENVIRONMENTAL PROTECTION

DIVISION OF AIR QUALITY

601 57th Street, SE
Charleston, WV 25304
(304) 926-0475
www.wvdep.org/daq

APPLICATION FOR NSR PERMIT AND TITLE V PERMIT REVISION (OPTIONAL)

PLEASE CHECK ALL THAT APPLY TO **NSR (45CSR13)** (IF KNOWN):

☐ **CONSTRUCTION** ☒ **MODIFICATION** ☐ **RELOCATION**
☐ **CLASS I ADMINISTRATIVE UPDATE** ☐ **TEMPORARY**
☐ **CLASS II ADMINISTRATIVE UPDATE** ☐ **AFTER-THE-FACT**

PLEASE CHECK TYPE OF **45CSR30 (TITLE V)** REVISION (IF ANY):

☐ **ADMINISTRATIVE AMENDMENT** ☐ **MINOR MODIFICATION**
☐ **SIGNIFICANT MODIFICATION**

IF ANY BOX ABOVE IS CHECKED, INCLUDE TITLE V REVISION INFORMATION AS **ATTACHMENT S** TO THIS APPLICATION

FOR TITLE V FACILITIES ONLY: Please refer to "Title V Revision Guidance" in order to determine your Title V Revision options (Appendix A, "Title V Permit Revision Flowchart") and ability to operate with the changes requested in this Permit Application.

Section I. General

1. Name of applicant *(as registered with the WV Secretary of State's Office):*
Triad Hunter, LLC

2. Federal Employer ID No. ***(FEIN):***
27-1355830

3. Name of facility *(if different from above):*
Spencer Well Pad Station

4. The applicant is the:
☐ **OWNER** ☐ **OPERATOR** ☒ **BOTH**

5A. Applicant's mailing address:
125 Putnam St.
Marietta, Ohio 45750

5B. Facility's present physical address:
None
On CR 26 near Middlebourne, WV

6. **West Virginia Business Registration.** Is the applicant a resident of the State of West Virginia? ☐ **YES** ☒ **NO**

– If **YES,** provide a copy of the **Certificate of Incorporation/Organization/Limited Partnership** (one page) including any name change amendments or other Business Registration Certificate as **Attachment A.**

– If **NO,** provide a copy of the **Certificate of Authority/Authority of L.L.C./Registration** (one page) including any name change amendments or other Business Certificate as **Attachment A.**

7. If applicant is a subsidiary corporation, please provide the name of parent corporation: **Magnum Hunter Resources**

8. Does the applicant own, lease, have an option to buy or otherwise have control of the *proposed site?* ☒ **YES** ☐ **NO**

– If **YES,** please explain: **Applicant has a lease agreement with the land owner for installation of the well pad and all equipment necessary to manage produced liquid and gas**

– If **NO,** you are not eligible for a permit for this source.

9. Type of plant or facility (stationary source) to be **constructed, modified, relocated, administratively updated** or **temporarily permitted** (e.g., coal preparation plant, primary crusher, etc.): **Natural Gas Compressor Station**

10. North American Industry Classification System **(NAICS)** code for the facility:
486210

11A. DAQ Plant ID No. (for existing facilities only):
095-00021

11B. List all current 45CSR13 and 45CSR30 (Title V) permit numbers associated with this process (for existing facilities only):
R13-3035A

All of the required forms and additional information can be found under the Permitting Section of DAQ's website, or requested by phone.

12A.

- For **Modifications, Administrative Updates** or **Temporary permits** at an existing facility, please provide directions to the *present location* of the facility from the nearest state road;
- For **Construction** or **Relocation permits,** please provide directions to the *proposed new site location* from the nearest state road. Include a **MAP** as **Attachment B**.

From In the town of Middleborne, take Bridgeway Road (Co. Rte 26) across Middle Island Creek. Continue on County Route 26 as it turns right approximately 1,000 feet after crossing the creek. After approximately 0.6 miles there is a Y in the road. Route 26 bears to the left. Bear right. Entrance to the station is approximately 0.5 miles on the left.

12.B. New site address (if applicable):	12C. Nearest city or town: **Middlebourne**	12D. County: **Tyler**
12.E. UTM Northing (KM): **4376.709**	12F. UTM Easting (KM): **528.757**	12G. UTM Zone: **17**

13. Briefly describe the proposed change(s) at the facility: **Modification of equipment to better match the volume of gas and liquids to be managed by the facility.**

14A. Provide the date of anticipated installation or change: **February 20, 2016** – If this is an **After-The-Fact** permit application, provide the date upon which the proposed change did happen: / /	14B. Date of anticipated Start-Up if a permit is granted: **Within 90 days of approval**

14C. Provide a **Schedule** of the planned **Installation** of/**Change** to and **Start-Up** of each of the units proposed in this permit application as **Attachment C** (if more than one unit is involved).

15. Provide maximum projected **Operating Schedule** of activity/activities outlined in this application:
Hours Per Day **24** Days Per Week **7** Weeks Per Year **52**

16. Is demolition or physical renovation at an existing facility involved? ☐ **YES** ☒ **NO**

17**. Risk Management Plans.** If this facility is subject to 112(r) of the 1990 CAAA, or will become subject due to proposed changes (for applicability help see www.epa.gov/ceppo), submit your **Risk Management Plan (RMP)** to U. S. EPA Region III.

18**. Regulatory Discussion.** List all Federal and State air pollution control regulations that you believe are applicable to the proposed process *(if known).* A list of possible applicable requirements is also included in Attachment S of this application (Title V Permit Revision Information). Discuss applicability and proposed demonstration(s) of compliance *(if known).* Provide this information as **Attachment D.**

Section II. Additional attachments and supporting documents.

19. Include a check payable to WVDEP – Division of Air Quality with the appropriate **application fee** (per 45CSR22 and 45CSR13).

20. Include a **Table of Contents** as the first page of your application package.

21. Provide a **Plot Plan,** e.g. scaled map(s) and/or sketch(es) showing the location of the property on which the stationary source(s) is or is to be located as **Attachment E** (Refer to ***Plot Plan Guidance***) **.**

– Indicate the location of the nearest occupied structure (e.g. church, school, business, residence).

22. Provide a **Detailed Process Flow Diagram(s)** showing each proposed or modified emissions unit, emission point and control device as **Attachment F.**

23. Provide a **Process Description** as **Attachment G.**

– Also describe and quantify to the extent possible all changes made to the facility since the last permit review (if applicable).

All of the required forms and additional information can be found under the Permitting Section of DAQ's website, or requested by phone.

24. Provide **Material Safety Data Sheets (MSDS)** for all materials processed, used or produced as **Attachment H.**

– For chemical processes, provide a MSDS for each compound emitted to the air.

25. Fill out the **Emission Units Table** and provide it as **Attachment I.**

26. Fill out the **Emission Points Data Summary Sheet (Table 1 and Table 2)** and provide it as **Attachment J.**

27. Fill out the **Fugitive Emissions Data Summary Sheet** and provide it as **Attachment K.**

28. Check all applicable **Emissions Unit Data Sheets** listed below:

☐ Bulk Liquid Transfer Operations
☐ Chemical Processes*
☐ Concrete Batch Plant
☐ Grey Iron and Steel Foundry
☐ General Emission Unit, specify:
☐ Haul Road Emissions
☐ Hot Mix Asphalt Plant
☐ Incinerator
☒ Natural Gas Compressors
☐ Quarry
☐ Solid Materials Sizing, Handling and Storage Facilities
☒ Storage Tanks

*****Leak Source Data Sheet Only

Fill out and provide the **Emissions Unit Data Sheet(s)** as **Attachment L.**

29. Check all applicable **Air Pollution Control Device Sheets** listed below:

☐ Absorption Systems
☐ Adsorption Systems
☐ Afterburner
☐ Baghouse
☐ Condenser
☐ Electrostatic Precipitator
☒ Flare
☐ Mechanical Collector
☐ Wet Collecting System

☒ Other Collectors, specify: **Catalyst**

Fill out and provide the **Air Pollution Control Device Sheet(s)** as **Attachment M.**

30. Provide all **Supporting Emissions Calculations** as **Attachment N,** or attach the calculations directly to the forms listed in Items 28 through 31.

31. **Monitoring, Recordkeeping, Reporting and Testing Plans.** Attach proposed monitoring, recordkeeping, reporting and testing plans in order to demonstrate compliance with the proposed emissions limits and operating parameters in this permit application. Provide this information as **Attachment O.**

➢ Please be aware that all permits must be practically enforceable whether or not the applicant chooses to propose such measures. Additionally, the DAQ may not be able to accept all measures proposed by the applicant. If none of these plans are proposed by the applicant, DAQ will develop such plans and include them in the permit.

32. **Public Notice.** At the time that the application is submitted, place a **Class I Legal Advertisement** in a newspaper of general circulation in the area where the source is or will be located (See 45CSR§13-8.3 through 45CSR§13-8.5 and ***Example Legal Advertisement*** for details). Please submit the **Affidavit of Publication** as **Attachment P** immediately upon receipt.

33**. Business Confidentiality Claims.** Does this application include confidential information (per 45CSR31)?

☐ **YES** ☒ **NO**

➢ If **YES,** identify each segment of information on each page that is submitted as confidential and provide justification for each segment claimed confidential, including the criteria under 45CSR§31-4.1, and in accordance with the DAQ's ***"Precautionary Notice – Claims of Confidentiality"*** guidance found in the ***General Instructions*** as **Attachment Q.**

Section III. Certification of Information

34. **Authority/Delegation of Authority.** Only required when someone other than the responsible official signs the application. Check applicable **Authority Form** below:

☐ Authority of Corporation or Other Business Entity
☐ Authority of Governmental Agency
☐ Authority of Partnership
☐ Authority of Limited Partnership

Submit completed and signed **Authority Form** as **Attachment R.**

All of the required forms and additional information can be found under the Permitting Section of DAQ's website, or requested by phone.

35A. **Certification of Information.** To certify this permit application, a Responsible Official (per 45CSR§13-2.22 and 45CSR§30-2.28) or Authorized Representative shall check the appropriate box and sign below.

Certification of Truth, Accuracy, and Completeness

I, the undersigned ☒ **Responsible Official** / ☐ **Authorized Representative,** hereby certify that all information contained in this application and any supporting documents appended hereto, is true, accurate, and complete based on information and belief after reasonable inquiry I further agree to assume responsibility for the construction, modification and/or relocation and operation of the stationary source described herein in accordance with this application and any amendments thereto, as well as the Department of Environmental Protection, Division of Air Quality permit issued in accordance with this application, along with all applicable rules and regulations of the West Virginia Division of Air Quality and W.Va. Code § 22-5-1 et seq. (State Air Pollution Control Act). If the business or agency changes its Responsible Official or Authorized Representative, the Director of the Division of Air Quality will be notified in writing within 30 days of the official change.

Compliance Certification

Except for requirements identified in the Title V Application for which compliance is not achieved, I, the undersigned hereby certify that, based on information and belief formed after reasonable inquiry, all air contaminant sources identified in this application are in compliance with all applicable requirements.

SIGNATURE _____ *(Please use blue ink)* DATE: 11/12/15 *(Please use blue ink)*

35B. Printed name of signee: **Michael Horan**		35C. Title: **Vice President - Operations**
35D. E-mail: **mhoran@triadhunter.com**	36E. Phone: **740/374-2940**	36F. FAX:
36A. Printed name of contact person (if different from above):		36B. Title:
36C. E-mail:	36D. Phone:	36E. FAX:

PLEASE CHECK ALL APPLICABLE ATTACHMENTS INCLUDED WITH THIS PERMIT APPLICATION:

- ☒ **Attachment A: Business Certificate**
- ☒ **Attachment B: Map(s)**
- ☒ **Attachment C: Installation and Start Up Schedule**
- ☒ **Attachment D: Regulatory Discussion**
- ☒ **Attachment E: Plot Plan**
- ☒ **Attachment F: Detailed Process Flow Diagram(s)**
- ☒ **Attachment G: Process Description**
- ☐ **Attachment H: Material Safety Data Sheets (MSDS)**
- ☒ **Attachment I: Emission Units Table**
- ☒ **Attachment J: Emission Points Data Summary Sheet**
- ☐ **Attachment K: Fugitive Emissions Data Summary Sheet**
- ☒ **Attachment L: Emissions Unit Data Sheet(s)**
- ☒ **Attachment M: Air Pollution Control Device Sheet(s)**
- ☒ **Attachment N: Supporting Emissions Calculations**
- ☒ **Attachment O: Monitoring/Recordkeeping/Reporting/Testing Plans**
- ☒ **Attachment P: Public Notice**
- ☐ **Attachment Q: Business Confidential Claims**
- ☐ **Attachment R: Authority Forms**
- ☐ **Attachment S: Title V Permit Revision Information**
- ☒ **Application Fee**

Please mail an original and three (3) copies of the complete permit application with the signature(s) to the DAQ, Permitting Section, at the address listed on the first page of this application. Please DO NOT fax permit applications.

FOR AGENCY USE ONLY – IF THIS IS A TITLE V SOURCE:

- ☐ ***Forward 1 copy of the application to the Title V Permitting Group and:***
- ☐ ***For Title V Administrative Amendments:***
  - ☐ ***NSR permit writer should notify Title V permit writer of draft permit,***
- ☐ ***For Title V Minor Modifications:***
  - ☐ ***Title V permit writer should send appropriate notification to EPA and affected states within 5 days of receipt,***
  - ☐ ***NSR permit writer should notify Title V permit writer of draft permit.***
- ☐ ***For Title V Significant Modifications processed in parallel with NSR Permit revision:***
  - ☐ ***NSR permit writer should notify a Title V permit writer of draft permit,***
  - ☐ ***Public notice should reference both 45CSR13 and Title V permits,***
  - ☐ ***EPA has 45 day review period of a draft permit.***

All of the required forms and additional information can be found under the Permitting Section of DAQ's website, or requested by phone.

SECTION II

Attachments

ATTACHMENT A

Business Registration

State of West Virginia

Certificate

I, Natalie E. Tennant, Secretary of State,
of the State of West Virginia, hereby certify that

Triad Hunter, LLC

has filed the appropriate registration documents in my office according to the provisions of the West Virginia Code and hereby declare the organization listed above as duly registered with the Secretary of State's Office.

Given under my hand and
the Great Seal of West Virginia
on this day of
January 29, 2010

Natalie E Tennant

Secretary of State

ATTACHMENT B

Site Location Map

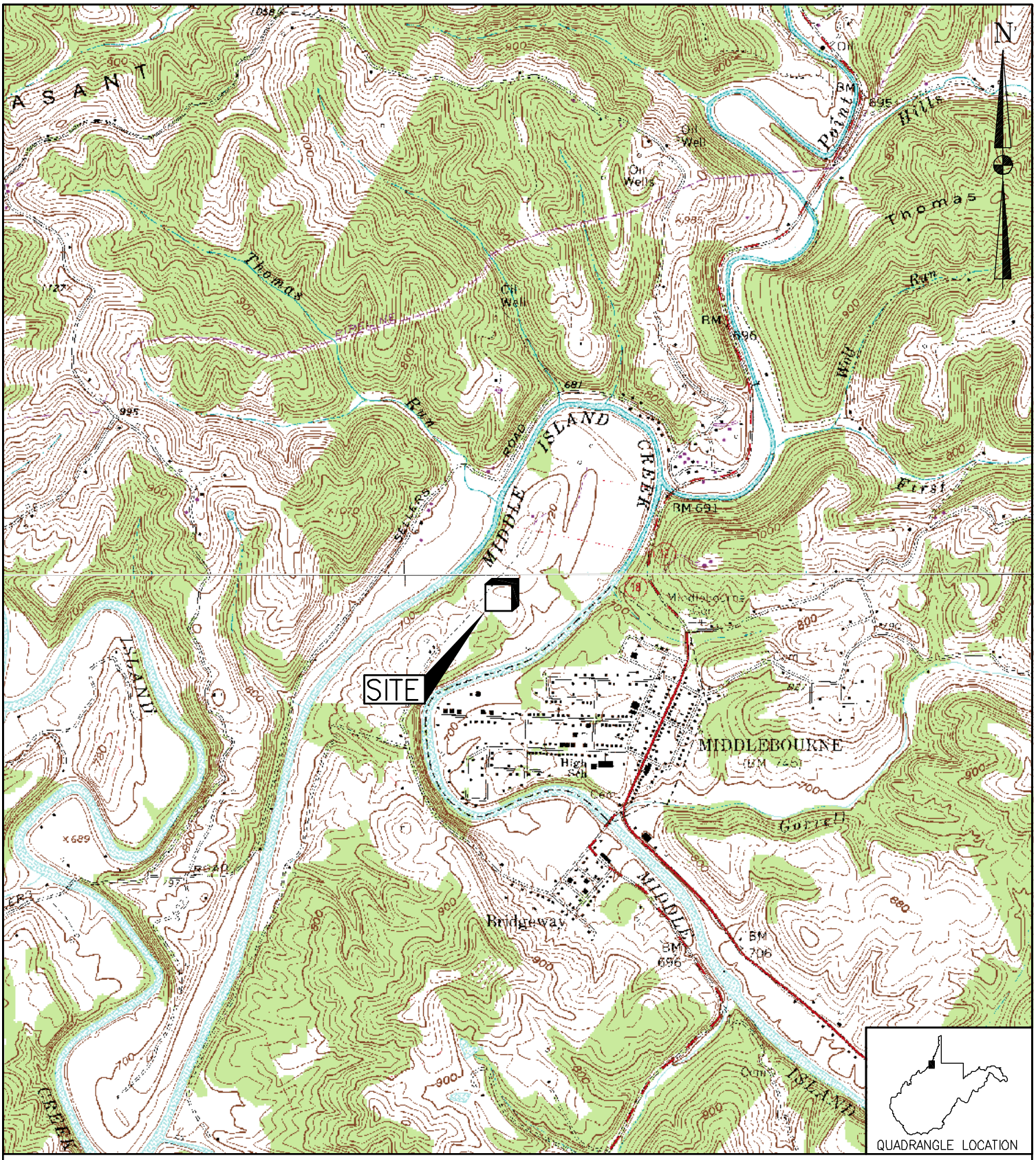

REFERENCE: USGS 7.5' QUADRANGLE MAP OF: MIDDLEBOURNE, WEST VIRGINIA; DATED 1960, PHOTOINSPECTED 1976.

DRAWN BY	DJF
DATE	8/31/12
CHECKED BY	RAD
SET JOB NO.	212092
SET DWG FILE	SPENCERm01.dwg
DRAWING SCALE	1"=2000'

SE TECHNOLOGIES
98 Vanadium Road Bridgeville, PA 15017 (412) 221-1100

TRIAD HUNTER, LLC

SPENCER WELL PAD COMPRESSOR STATION
MIDDLEBOURNE, WEST VIRGINIA
SITE LOCATION MAP

DRAWING NO. FIGURE 1

REV. 0

Plot: env045 01/09/2013 09:19 G:\TRIAD HUNTER\212092\SPENCERm01.dwg

ATTACHMENT C

Construction Schedule

Triad Hunter, LLC
Spencer Well Pad Compressor Station
Attachment C – Construction Schedule

The requested installations and removals in this application all involve easily exchanged or removed equipment. It is anticipated that all work can be completed within 90 days of receipt of approval.

ATTACHMENT D

Regulatory Analysis

TRIAD HUNTER, LLC
Spencer Well Pad Station
Attachment D - Regulatory Analysis

Both State and Federal environmental regulations governing air emissions apply to Triad Hunter, LLC's (Triad) Spencer Compressor Station near the community of Middlebourne in Tyler County, West Virginia. The West Virginia Department of Environmental Protection (WVDEP) has been delegated the authority to implement certain federal air quality requirements for the state.

The following is a summary of relevant and applicable regulations governing air emissions from this facility. The planned modifications to the facility do not trigger the applicability of any additional regulations.

1.1 PSD and NSR

The facility will remain a minor source with respect to Prevention of Significant Deterioration (PSD) regulations as it will not have the potential to emit more than the annual emission thresholds of any PSD regulated pollutant.

The facility is within an area designated as attainment for all criteria pollutants. Consequently, the facility is not subject to the New Source Review (NSR) regulations. Additionally, potential emissions are below the annual emission thresholds triggering PSD. Consequently, neither PSD nor NSR requirements are not applicable to this project.

1.2 Title V Operating Permit Program

West Virginia has incorporated provisions of the federal Title V operating permit program. Thresholds for inclusion under the Title V program are 10 tpy of any single Hazardous Air Pollutant (HAP) or 25 tons of any combination of HAP and/or 100 tpy of all other regulated pollutants. Potential emissions at this facility, including the proposed modifications, are below both of these thresholds. In addition to this annual potential emissions threshold, any facility operating under certain federal New Source Performance Standards also fall under the Title V program. While the facility is indeed regulated under certain New Source Performance Standards, none of these require participation in the Title V Operating Permit Program. Thus, a Title V operating permit is not required.

1.3 Aggregation

Source aggregation determinations are typically made based on the following criteria:

- Whether the facilities are under common control,
- Whether the facilities belong to the same Major Group (i.e. the first two digit code) as described in the Standard Industrial Classification Manual, 1972, as amended by the 1977 Supplement;
- Whether the facilities are located on one or more contiguous or adjacent properties; and the distance between all pollutant emitting activities,
- Whether the facilities can operate independently

Only if all criteria are met does a permitting authority aggregate the facilities into a single source.

The planned changes to the Spencer Compressor Station will not impact aggregation of this facility with any other Triad facility.

1.4 New Source Performance Standards

New Source Performance Standards (NSPS) regulations promulgated under 40 CFR 60 require new and reconstructed facilities to control emissions to the level achievable by Best-Available Control Technology (BACT). Specific NSPS requirements *potentially* applicable to the planned fractionation facility are as follows:

- 40 CFR 60, Subpart Dc—Standards of Performance for Small Industrial-Commercial-Institutional Steam Generating Units
- 40 CFR 60, Subpart K/Ka/Kb – Storage Vessels for Petroleum Liquids/Volatile Organic Liquids
- 40 CFR 60, Subpart KKK – Equipment Leaks of VOC from Onshore Natural Gas Processing Stations
- 40 CFR 60, Subpart LLL – Onshore Natural Gas Processing Stations: SO_2 Emissions
- 40 CFR 60, Subpart III – Stationary Compression Ignition Internal Combustion Engines
- 40 CFR 60, Subpart JJJJ – Stationary Spark Ignition Internal Combustion Engines
- 40 CFR 60, Subpart OOOO - Standards of Performance for Crude Oil and Natural Gas Production, Transmission and Distribution

1.4.1 Subpart Dc

This subpart limits SO_2 and PM emissions from boilers and heaters fired by various fuels. While the primary thrust of this set of regulations is to control SO_2 and PM emissions from coal and oil-fired boilers and heaters, natural gas fired units greater than 10 MMBTU/Hr heat input are also covered under this rule. There are no combustion devices at this facility that are regulated by this rule.

1.4.2 Subpart K/Ka/Kb

These three subparts apply to volatile organic liquid storage tanks of specific sizes constructed in certain timeframes. Subpart K applies to tanks constructed or modified between 1973 and 1978 while Subpart Ka applies to tanks constructed between 1978 and 1984. Subpart Kb applies to storage tanks constructed or modified after 1984. The proposed additional Condensate Tanks are potentially subject to one or more of these rules, depending upon its date of manufacture. However, the capacity of these tanks (16,800 gallons each) is below the threshold for Subpart K and Ka (40,000 gallons), excluding it from these rules. As the tanks have been manufactured after this date, they are potentially regulated under Subpart Kb. However, again, the capacities of these tanks are below the threshold for regulation under this rule (19,800 gallons or 75 cubic meters).

The planned modifications will not impact Spencer Compressor Station’s status with respect to this rule.

1.4.3 Subpart KKK

This subpart regulates VOC emissions from equipment and piping connection leaks at natural gas processing plants, including fractionation facilities. The Spencer Compressor Station is not a gas processing or fractionation plant. Hence, this rule does not apply.

1.4.4 Subpart LLL

This set of regulations governs emissions from processes used to remove sulfur gases from the field gas stream (sweetening unit) and subsequent sulfur recovery operations. Neither the existing nor the proposed modifications include any sulfur removal processes. Hence, this rule does not apply.

1.4.5 Subpart IIII

This subpart governs emissions from new compression ignition internal combustion engines (CI ICE) manufactured after July 11, 2005. There are no compression ignition engines (e.g. diesel-fired emergency generator) currently at this station or planned as part of this modification. Hence, this rule does not apply.

1.4.6 Subpart JJJJ

This subpart governs emissions from new stationary spark ignition internal combustion engines (SI ICE) manufactured after July 1, 2007. The existing gas compressor engines fall under jurisdiction of this rule. The replacement compressor engine was manufactured prior to the effective date of this rule.

1.4.7 Subpart OOOO

The potentially applicable sections of this rule sets restrictions on any pneumatic controllers present at the Spencer Compressor Station; establishes maintenance requirements for the compressors and sets requirements for storage vessels with potential VOC emissions greater than 6 tons per year. These portions of Subpart OOOO will continue to apply to the Spencer Compressor Station.

One of the key components to this rule [40 CFR 60.5390(b)] is the requirement that all pneumatic controllers located between the well head and a processing plant must have a bleed rate of less than 6 scfh. All pneumatic controllers installed at the Spencer Compressor Station meet this criterion. Thus, this aspect of the rule does not apply.

This rule also stipulates that storage vessels with VOC emissions equal to or greater than 6 tpy must control those emissions by 95% by October 15, 2013. The planned modifications will not impact Spencer Compressor Station's status with respect to this rule.

1.5 National Emission Standards for Hazardous Air Pollutants

National Emission Standards for Hazardous Air Pollutants (NESHAPs) promulgated under 40 CFR 63 regulate the emission of Hazardous Air Pollutants (HAPs) from certain industrial processes. In general, these rules apply to major sources of HAPs with a major source being defined as having the potential to emit more than 10 tpy of any individual HAP or 25 tpy of total

HAPs. Emissions standards under these rules have been established as the Maximum Achievable Control Technology (MACT) for each source category. The following NESHAP source category standards are potentially applicable to the planned facility:

- 40 CFR 63, Subpart HH – NESHAP from Oil and Natural Gas Production Facilities
- 40 CFR 63, Subpart HHH – NESHAP from Natural Gas Transmission and Storage Facilities
- 40 CFR 63, Subpart ZZZZ – NESHAP from Stationary Reciprocating Internal Combustion Engines
- 40 CFR 63, Subpart DDDDD – NESHAP for Industrial, Commercial and Institutional Boilers and Process Heaters

1.5.1 Subpart HH

This Subpart contains MACT standards for major and area source dehydration units located at natural gas production facilities. The facility contains a dehydration units covered by this rule. The planned modifications will not impact Spencer Compressor Station's status with respect to this rule.

1.5.2 Subpart HHH

This Subpart applies to dehydration units at facilities which are major sources of HAPs that transport or store natural gas in association with transmission pipelines as defined by 40 CFR 63.1271. The current operations and proposed amendments do not contain a dehydration operation associated with natural gas transmission. Hence, this rule does not apply.

1.5.3 Subpart ZZZZ

This Subpart governs emissions from a stationary Reciprocating Internal Combustion Engine (RICE) located both at major and area source of HAPs. As noted above, the existing engines fall under NSPS JJJJ. The new CAT 3508 TALE main gas compressor is not regulated under Subpart JJJJ as it was manufactured prior to the effective date of that rule. However, the manufacture date of this engine (May 23, 2007) falls after the effective date of Subpart ZZZZ (June 12, 2006 per 40 CFR63.6590). Hence, this rule does not apply. Thus, the planned modifications will not impact Spencer Compressor Station's status with respect to this rule.

1.5.4 Subpart DDDDD

This Subpart applies to industrial process heaters of various sizes and fuel types located at facilities that are classified as a major source of HAPs. As the facility is not and will not become a major HAPs source under this application, this rule still does not apply.

1.6 Chemical Accident Prevention

Subparts B-D of 40 CFR 68 present the requirements for the assessment and subsequent preparation of a Risk Management Plan (RMP) for a facility that stores more than a threshold quantity of a regulated substance listed in 40 CFR 68.130. However, in accordance with 68.115(c(ii), flammable naturally occurring mixtures at a location prior to entering a gas processing plant need not be considered when determining if the threshold quantity has been exceeded. Hence, an RMP is not required for this facility.

1.7 West Virginia State Requirements

1.7.1 45 CSR 2

The facility is subject to the opacity requirement of 45 CSR 2. Emissions from the facility cannot exceed 10% over any six minute period.

1.7.2 45 CSR 4

This regulation prohibits the emission of objectionable odors. Triad is obligated to run the station in a manner that does not produce objectionable odors.

1.7.3 45 CSR 10

This regulation limits emissions of sulfur oxides. As the sulfur content of the inlet liquid contains no measurable sulfur, anticipated emissions of sulfur oxides is negligible. Thus, while parts of this rule may be applicable to the facility, no actions are required on the part of Triad to attain compliance.

1.7.4 45 CSR 13

The state regulations applicable to the permitting of the proposed construction are in Title 45 Series 13 of the Code of State Regulations. The facility has the potential to emit NOx, CO and VOCs in excess of the thresholds that define a stationary source. This will remain true under the proposed amendment. Additionally, as the facility is regulated under a federal New Source Performance Standard, it is required to have a permit.

It is important to note that the facility's potential to emit is less than the thresholds that would classify the facility as a Major Source under 45 CSR 14.

1.7.5 45 CSR 16

This series of regulations is an incorporation, by reference, of the New Source Performance Standards codified under 40 CFR 60. As discussed under the federal regulations, the planned fractionation facility is subject to the emission limitations, monitoring, testing and recordkeeping of several NSPS Subparts.

1.7.6 45 CSR 30

The state regulations applicable to Title V operating permits are in Title 45 Series 30. The planned facility, as noted above, does not have the potential to emit any regulated pollutant above the threshold that would define it as a major facility. Although the facility is subject to a New Source Performance Standard, it is not obligated to obtain a Title V permit under this Standard. This federal exclusion has been adopted by WVDEP.

1.7.7 Other Applicable Requirements

Through Series 34, WVDEP has adopted the National Emission Standards for Hazardous Air Pollutants for Source Categories. This topic has been addressed above.

ATTACHMENT E

Site Layout Diagram

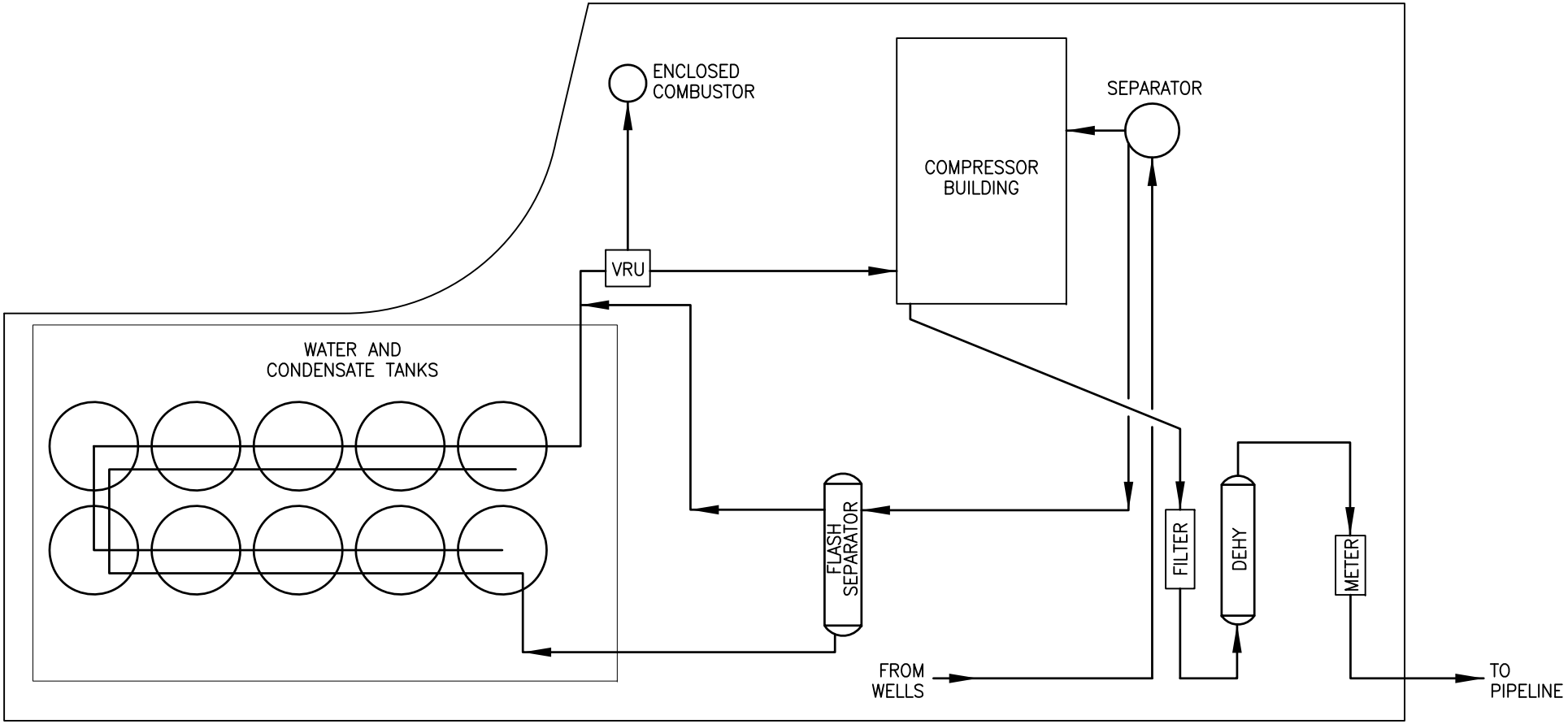

DRAWN BY	DJF
DATE	1/3/13
CHECKED BY	RAD
SET JOB NO.	212092
SET DWG FILE	SPENCER WELL PAD STATIONa01.dwg
DRAWING SCALE	N.T.S.

SE TECHNOLOGIES
98 Vanadium Road Bridgeville, PA 15017 (412) 221-1100

TRIAD HUNTER, LLC

SPENCER WELL PAD COMPRESSOR STATION
MIDDLEBOURNE, WEST VIRGINIA
SITE LAYOUT

DRAWING NAME: FIGURE 2

REV. 2

Plot: env045 08/22/2013 15:37 G:\TRIAD HUNTER\212092\SPENCER WELL PAD STATIONa01.dwg

ATTACHMENT F

Process Flow Diagram

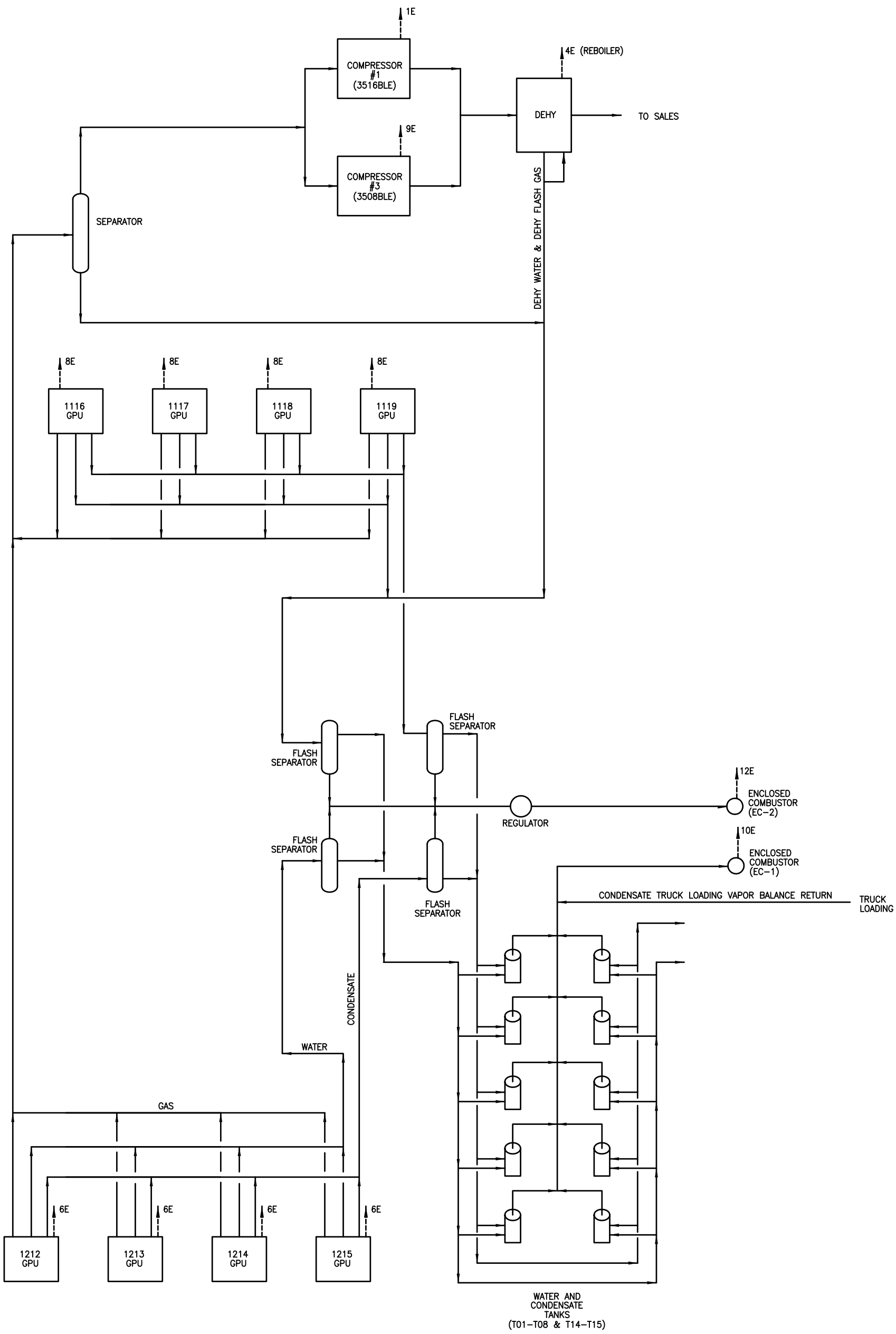

LEGEND:

EMISSION SOURCE

DRAWN BY	DJF
DATE	10/30/15
CHECKED BY	RAD
SET JOB NO.	212092-02
SET DWG FILE	PROCESS FLOW DIAGRAMb01.dwg
DRAWING SCALE	N.T.S.

SE TECHNOLOGIES
98 Vanadium Road Bridgeville, PA 15017 (412) 221-1100

TRIAD HUNTER, LLC

SPENCER WELL PAD COMPRESSOR STATION
MIDDLEBOURNE, WEST VIRGINIA
PROCESS FLOW DIAGRAM

DRAWING NAME

REV. 3

Plot: env045 10/30/2015 16:16 G:\TRIAD HUNTER\212092\SPENCER FLOW DIAGRAMa02.dwg

ATTACHMENT G

Process Description

Triad Hunter, LLC
Spencer Well Pad Station
Attachment G - Process Description

The following text presents an overview of station operations and the planned equipment modifications and operational changes.

Natural gas and produced fluids (condensate and water) are currently received from the wells located adjacent to this facility at approximately 900-1000 psi. These materials then pass through a separator where gas and produced fluids (a mixture of condensate and water) are separated from the inlet gas stream. The gas is routed directly to one of two main compression units and then to a TEG dehydration unit where the water vapor content in the gas flow is reduced to required concentrations. Upon completion of dehydration, the gas is discharged to a gathering line owned and operated by others. As there have been significant changes in the volume of gas and condensate entering the station, changes in equipment and operational procedures are necessary to maintain a properly sized facility that is operated in a cost-effective manner.

Triad is seeking to make various equipment modifications to accommodate a decrease in the amount of gas and condensate that the station must manage. The requested equipment changes associated with this are as follows:

- With the lower potential condensate throughput, continued use of the flash compressor is no longer cost effective. Accordingly, Triad Hunter is seeking approval for routing the gases being managed by this device to combustors as described below.
- The atmospheric tanks contain condensate and produced water. They are equipped with a capture and control system for the control of vapors. This system is comprised of the flash gas compressor (also described as a Vapor Recovery Unit in the current permit) noted above whereby the vapors are compressed and injected into the inlet side of the main compression units. As allowed in the current permit, these vapors are routed to an enclosed combustor during times when the flash compressor is not available. Triad is seeking approval to route the vapors emitted from the tanks solely to the existing combustor (a COMM 100) plus a second COMM 100 should condensate production approach the vapor flows warranting a second unit. A new combustor (an Abutec100) will manage gas from the flash separator which is currently managed by the VRU. For permitting purposes, a capture and control efficiency 98% of the tank vapors is claimed, with approximately 1 percent loss in the various fittings on the tanks and associated piping to the combustor and approximately 1 percent loss in the combustor efficiency.
- In accordance with the current permit, condensate truck loading takes place with a vapor balance system in place, whereby vapors generated during the condensate loading operation are routed back to the tanks and ultimately captured by the flash compressor (VRU). Triad is seeking to have the condensate truck loading vapors routed to the existing combustor only, so as to allow removal of the VRU and to ensure any oxygen that may be present in the tank trucks is not routed into the inlet side of the gas management system.
- With the decrease in gas that must be managed by the station, Triad Hunter is seeking to replace one of the two CAT 3516 compressor drivers with a smaller CAT 3508.

In addition to the above changes needed to reflect current and anticipated reductions in gas and liquids flow, there are four minor corrections to the permit required:

- There are eight GPUs with heat input of 1 MMBTU/Hr each. The current permit is for eight at 1.2 MMBTU/hr each. This modification seeks to correct this inaccuracy.
- The previous applications and subsequent permits for this facility did not include fugitive dust emissions from water and condensate tanker trucks. This submittal seeks to correct this earlier oversight.
- The previous applications and subsequent permits for this facility did not include the minor VOC emissions from produced water truck loading. This submittal seeks to correct this earlier oversight.
- Lastly, Triad is updating its blowdown calculations to match expected operating conditions and equipment for the requested compressors.

Separately, Triad Hunter anticipates that the next wells drilled at this site may contain higher concentrations of BTEX than was previously assumed. Triad Hunter is therefore seeking to modify the allowable limits for the dehydration unit emissions to better reflect the expected gas composition.

No other changes are being requested at this time.

In Summary, emission sources at the Spencer facility that Triad Hunter will include the following:

- Eight GPUs rated at 1.0 MMBTU/Hr (EXISTING SOURCE – Corrected)
- One 40 MMSCFD Dehydration Unit with 500 MBTU/Hr Reboiler **(MODIFIED SOURCE)**
- One CAT 3516B Compressor Driver engine (EXISTING SOURCE)
- One CAT 3508B Compressor Driver engine **(NEW SOURCE)**
- Four 400 BBL Produced Water Tanks (EXISTING SOURCE)
- Four 400 BBL Condensate Tanks (EXISTING SOURCE)
- Fugitive Emissions – Facility Roadways (EXISTING SOURCE)
- Fugitive Emissions – Component Leaks **(NEW AND EXISTING SOURCE)**

ATACHMENT I

Emission Unit Table

Attachment I

Emission Units Table

(includes all emission units and air pollution control devices that will be part of this permit application review, regardless of permitting status)

Emission Unit ID[1]	Emission Point ID[2]	Emission Unit Description	Year Installed/ Modified	Design Capacity	Type[3] and Date of Change	Control Device[4]
1S	1E	Caterpillar 3516B	2013	1380 Hp	EXIST	1C
2S	2E	Caterpillar 3516B	2013	1380 Hp	**REM**	2C
3S	3E	Caterpillar 3304 NA	2013	95 Hp	Previously Removed	3C
4S	4E (Reboiler +Still Vent) 12E (Flash Gas)	Dehy Still Vent + Re-boiler	2013	40 MMCF/Day Gas Flow + 500 MBTU/Hr Reboiler	**MOD**	Condenser w/ Still Vent Gases to Re-boiler. Flash Gas to **EC-2**
5S	5E	Gas Production Units	2012	0.012 MMBTU/Hr Each	Previously Removed	None
6S	6E	Four Gas Production Units	2012	1.0 MMBTU/Hr Each	EXIST	None
7S	7E	Caterpillar 3306 TA	2014	203 Hp	**REM**	7C
8S	8E	Four Gas Production Units	2013	2.0 MMBTU/Hr Each	EXIST	None
9S	9E	Caterpillar 3508B	2015	630 HP	**NEW**	9C
EC-1	10E	Enclosed Combustor (COMM 100)	2014	Two at 2.5 MMBTU/Hr each	EXIST **+NEW**	N/A
T01-T08	10E	Condensate and Water Tanks	2013	16,800 Gallons Each	EXIST	Enclosed Combustor EC-1
T09-T10	T09-T10	Lube Oil Storage Tanks	2013	1,500 Gallons Each	EXIST	None
T11	T11	Used Oil Storage Tank	2013	2,000 Gallons	EXIST	None

T12	T12	Ethylene Glycol Storage Tank	2013	2,000 Gallons	EXIST	None
T13	T13	TEG Storage Tank	2013	600 Gallons	EXIST	None
T14-T15	10E	Condensate and Water Tanks	2013	16,800 Gallons Each	EXIST	Enclosed Combustor EC-1
TL-1	10E	Condensate Truck Loading	2013	8,474 Gallons per Day	EXIST	Enclosed Combustor EC-1
TL-2	10E	Produced Water Truck Loading	2013	55,524 Gallons per Day	EXIST	None
EC-2	12E	Enclosed Combustor (Abutech 100)	2012	9.2 MMBTU/Hr	**NEW**	N/A
---	---	Fugitive + Blowdowns	2012 +2015	N/A	EXIST + **NEW**	None

[1] For Emission Units (or Sources) use the following numbering system:1S, 2S, 3S,... or other appropriate designation.
[2] For Emission Points use the following numbering system:1E, 2E, 3E, ... or other appropriate designation.
[3] New, modification, removal
[4] For Control Devices use the following numbering system: 1C, 2C, 3C,... or other appropriate designation.

ATTACHMENT J

Emission Points Data Summary Sheet

ATTACHMENT J

Emission Points Data Summary Sheet

New Equipment Only

Table 1: Emissions Data

Emission Point ID No. *(Must match Emission Units Table & Plot Plan)*	Emission Point Type[1]	Emission Unit Vented Through This Point *(Must match Emission Units Table & Plot Plan)*		Air Pollution Control Device *(Must match Emission Units Table & Plot Plan)*		Vent Time for Emission Unit *(chemical processes only)*		All Regulated Pollutants - Chemical Name/CAS[3] *(Speciate VOCs & HAPS)*	Maximum Potential Uncontrolled Emissions [4]		Maximum Potential Controlled Emissions [5]		Emission Form or Phase *(At exit conditions, Solid, Liquid or Gas/Vapor)*	Est. Method Used [6]	Emission Concentration [7] (ppmv or mg/m^4)
		ID No.	Source	ID No.	Device Type	Short Term[2]	Max (hr/yr)		lb/hr	ton/yr	lb/hr	ton/yr			
9E	Upward Vertical Stack6	9E	9S	9C	Catalyst	C	8760	NO_x	2.78	12.17	2.78	12.17	GAS	EE	
								CO	2.83	12.41	1.42	6.21	GAS	EE	
								VOC	0.50	2.19	0.25	1.10	GAS	EE	
								SO_2	<0.01	0.01	<0.01	0.01	GAS	EE	
								PM/PM10	0.05	0.24	0.05	0.24	Solid	EE	
								Formaldehyde	0.39	1.70	0.19	0.85	Gas	EE	
								CO2e	953	4,172	953	4,172	Gas	EE	

The EMISSION POINTS DATA SUMMARY SHEET provides a summation of emissions by emission unit. Note that un-captured process emission unit emissions are not typically considered to be fugitive and must be accounted for on the appropriate EMISSIONS UNIT DATA SHEET and on the EMISSION POINTS DATA SUMMARY SHEET. Please note that total emissions from the source are equal to all vented emissions, all fugitive emissions, plus all other emissions (e.g., un-captured emissions). Please complete the FUGITIVE EMISSIONS DATA SUMMARY SHEET for fugitive emission activities.

1. Please add descriptors such as upward vertical stack, downward vertical stack, horizontal stack, relief vent, rain cap, etc.
2. Indicate by "C" if venting is continuous. Otherwise, specify the average short-term venting rate with units, for intermittent venting (i.e., 15 min/hr). Indicate as many rates as needed to clarify frequency of venting (e.g., 5 min/day, 2 days/wk).
3. List all regulated air pollutants. Speciate VOCs, including all HAPs. Follow chemical name with Chemical Abstracts Service (CAS) number. **LIST** Acids, CO, CS2, VOCs, H_2S, Inorganics, Lead, Organics, O_3, NO, NO_2, SO_2, SO_3, etc. **DO NOT LIST** CO_2, H_2, H_2O, N_2, O_2, and Noble Gases.
4. Give maximum potential emission rate with no control equipment operating. If emissions occur for less than 1 hr, then record emissions per batch in minutes (e.g., 5 lb VOC/20 minute batch).
5. Give maximum potential emission rate with proposed control equipment operating. If emissions occur for less than 1 hr, then record emissions per batch in minutes (e.g., 5 lb VOC/20 minute batch).
6. Indicate method used to determine emission rate as follows:
   MB = material balance; ST = stack test (give date of test); EE = engineering estimate; O = other (specify).

ATTACHMENT J

Emission Points Data Summary Sheet
New Equipment

Table 2: Release Parameter Data								
Emission Point ID No. *(Must match Emission Units Table)*	Inner Diameter (ft.)	Exit Gas			Emission Point Elevation (ft)		UTM Coordinates (km)	
		Temp. (^{o}F)	Volumetric Flow [1] (acfm) *at operating conditions*	Velocity (fps)	Ground Level *(Height above mean sea level)*	Stack Height [2] *(Release height of emissions above ground level)*	Northing	Easting
9E	1.67	855	3478	58		12		

[1] Give at operating conditions. Include inerts.
[2] Release height of emissions above ground level.

ATTACHMENT K

Fugitive Emissions

TRIAD HUNTER, LLC
Spencer Well Pad Compressor Station
Attachment K - Fugitive Emissions

As noted in the process description, Triad Hunter will continue to operate two main gas compressors, a single dehydration unit, a flash gas compressor and various tanks and ancillary equipment at this facility. This equipment contains a variety of piping containing natural gas and separated liquids under pressure. During the normal course of operation minor leaks from valves, pressure release devices and various fittings associated with this piping may occur. Estimates of these emissions are included in the calculations (Attachment H) and summarized on the form included in this section. These calculations are based on emission factors accepted by the American Petroleum Institute.

In addition, there will also be release of natural gas in association with compressor blowdowns associated with routine maintenance. The following text summarizes anticipated emissions associated with these activities.

Blowdown Emission Estimates

Compressor blowdowns take place on a routine basis in order to allow maintenance on the engines and associated compressors. It is anticipated that each engine will be depressurized a maximum of 60 times per year for maintenance and repair activities. As provided in the attached sheets from the compressor vendor, the volume of a blowdown for the each of these three compressors is:

CAT 3516 compressor	6503 scf
CAT 3508 compressor	3081 scf

Thus, with 60 events per year per device, a total of 575,040 cubic feet of gas is released per year. With a density of 0.0572 lb/scf, a maximum of 32,892 lb of gas will be released per year via blowdowns. The composition of the gas will have approximately 16.2% VOCs by weight. Thus, 5,329 pounds or 2.66 tons of VOCs will be emitted via blowdowns per year.

There is a potential for both engines to be blown down within a single hour should complete shutdown of the station be required. Under this circumstance, 9,584 cubic feet of gas would be released, equating to 88.8 lb of VOCs.

The blowdown gas is approximately 60.3% methane by weight. Thus, if both engines are blown down within an hour, this equates to 329.0 pounds of methane or 8,225 lbs CO_{2e}. With 575,040 cubic feet of gas being released per year, 19,834 pounds or 9.92 tpy of methane will be released in blowdowns. This is equivalent to 248 tpy CO_{2e}.

FUGITIVE EMISSIONS DATA SUMMARY SHEET

The FUGITIVE EMISSIONS SUMMARY SHEET provides a summation of fugitive emissions. Fugitive emissions are those emissions which could not reasonably pass through a stack, chimney, vent or other functionally equivalent opening. Note that uncaptured process emissions are not typically considered to be fugitive, and must be accounted for on the appropriate EMISSIONS UNIT DATA SHEET and on the EMISSION POINTS DATA SUMMARY SHEET.

Please note that total emissions from the source are equal to all vented emissions, all fugitive emissions, plus all other emissions (e.g. uncaptured emissions).

APPLICATION FORMS CHECKLIST - FUGITIVE EMISSIONS
1.) Will there be haul road activities? ☐ Yes ☒ No ☐ If YES, then complete the HAUL ROAD EMISSIONS UNIT DATA SHEET.
2.) Will there be Storage Piles? ☐ Yes ☒ No ☐ If YES, complete Table 1 of the NONMETALLIC MINERALS PROCESSING EMISSIONS UNIT DATA SHEET.
3.) Will there be Liquid Loading/Unloading Operations? ☒ Yes ☐ No ☒ If YES, complete the BULK LIQUID TRANSFER OPERATIONS EMISSIONS UNIT DATA SHEET.
4.) Will there be emissions of air pollutants from Wastewater Treatment Evaporation? ☐ Yes ☒ No ☐ If YES, complete the GENERAL EMISSIONS UNIT DATA SHEET.
5.) Will there be Equipment Leaks (e.g. leaks from pumps, compressors, in-line process valves, pressure relief devices, open-ended valves, sampling connections, flanges, agitators, cooling towers, etc.)? ☒ Yes ☐ No ☒ If YES, complete the LEAK SOURCE DATA SHEET section of the CHEMICAL PROCESSES EMISSIONS UNIT DATA SHEET.
6.) Will there be General Clean-up VOC Operations? ☐ Yes ☒ No ☐ If YES, complete the GENERAL EMISSIONS UNIT DATA SHEET.
7.) Will there be any other activities that generate fugitive emissions? ☒ Yes ☐ No ☐ If YES, complete the GENERAL EMISSIONS UNIT DATA SHEET or the most appropriate form.
If you answered “NO” to all of the items above, it is not necessary to complete the following table, “Fugitive Emissions Summary.”

FUGITIVE EMISSIONS SUMMARY	All Regulated Pollutants - Chemical Name/CAS [1]	Maximum Potential Uncontrolled Emissions [2]		Maximum Potential Controlled Emissions [3]		Est. Method Used [4]
		lb/hr	ton/yr	lb/hr	ton/yr	
Haul Road/Road Dust Emissions Paved Haul Roads	PM					
Unpaved Haul Roads	PM	13.16	18.50	13.16	18.50	EE
Storage Pile Emissions						
Loading/Unloading Operations	VOCs	53.3	19.3	16.0	5.79	EE
Wastewater Treatment Evaporation & Operations						
Equipment Leaks	Inlet Natural Gas(VOCs)	0.315	2.375	0.315	1.381	EE
General Clean-up VOC Emissions						
Other: **Blowdowns**	Inlet Natural Gas(VOCs)	88.8	2.66	88.8	2.66	EE

[1] List all regulated air pollutants. Speciate VOCs, including all HAPs. Follow chemical name with Chemical Abstracts Service (CAS) number. LIST Acids, CO, CS_2, VOCs, H_2S, Inorganics, Lead, Organics, O_3, NO, NO_2, SO_2, SO_3, all applicable Greenhouse Gases (including CO_2 and methane), etc. DO NOT LIST H_2, H_2O, N_2, O_2, and Noble Gases.

[2] Give rate with no control equipment operating. If emissions occur for less than 1 hr, then record emissions per batch in minutes (e.g. 5 lb VOC/20 minute batch).

[3] Give rate with proposed control equipment operating. If emissions occur for less than 1 hr, then record emissions per batch in minutes (e.g. 5 lb VOC/20 minute batch).

[4] Indicate method used to determine emission rate as follows: MB = material balance; ST = stack test (give date of test); EE = engineering estimate; O = other (specify).

3516B, 2-Stage (Note: assumed ideal gas behavior and used OD for volume calc)

ENTER the following Values:

Suction Pressure, psig	180	Suction Temperature, F	70
Discharge Pressure, psig	900	Discharge Temperature, F	120

Cylinders	Bore, in	Stroke, in	Rod Diameter, in	Pocket Clearance, in^3	Total Cylinder Volume, in^3	Temperature, R	Pressure, psig	Calculated Moles	section volumes FT3 @ STP
1st Stage Cylinder	9.13	4.50	2.00	0.00	280	529	500	0.01	6
1st Stage Cylinder	9.13	4.50	2.00	0.00	280	529	890	0.03	10
2nd Stage Cylinder	6.00	4.50	2.00	0.00	113	739	890	0.01	3
2nd Stage Cylinder	6.00	4.50	2.00	0.00	113	739	900	0.01	3
Scrubbers/Suction & Discharge Drums	**OD, in**	**Height/Length, in**	**Total Volume, in^3**			**Temperature, R**	**Pressure, psig**	**Calculated Moles**	
1st Stage Scrubber	30.00	68.00	48066			529	180	0.95	367
1st Stage Suction Drum	20.00	120.00	37699			529	180	0.75	288
1st Stage Discharge Drum	20.00	120.00	37699			739	890	2.49	958
2nd Stage Scrubber	30.00	68.00	48066			589	890	3.98	1532
2nd Stage Suction Drum	16.00	114.50	23022			589	890	1.91	734
2nd Stage Discharge Drum	16.00	114.50	23022			739	1440	2.44	940
Cooler Section	**No. of Tubes**	**OD, in**	**Length, in**	**Total Tube Volume, in^3**		**Temperature, R**	**Pressure, psig**	**Calculated Moles**	
1st Stage Cooler Section	137	0.63	288	12299		739	890	0.81	312
2nd Stage Cooler Section	170	0.63	288	15262		739	1440	1.62	623
Piping	**OD, in**	**Length, in**	**Total Piping Volume, in^3**			**Temperature, R**	**Pressure, psig**	**Calculated Moles**	
1st Stage Piping	8.00	114	5730			739	500	0.22	83
2nd Stage Piping	6.00	492	13911			739	1100	1.13	435
piping after Cooler	6.00	60	1696			739	1440	0.18	69
Bypass	4.00	348	4373			589	900	0.37	141
					Total Estimated Moles of Gas Discharged to Atmosphere per Blowdown =			16.91	
					Total Estimated Volume of Blowdown Gas, ft^3 @ STP (68F, 14.7 psia) =			6503	6503

piping and cylinders and scrubber stage 1 cooler section stage 1

3508, 2-Stage (Note: assumed ideal gas behavior and used OD for volume calc)

ENTER the following Values:

Suction Pressure, psig	250	Suction Temperature, F	70
stage 1 inter	600		206
Stage 2 inter			216
Final discharge Pressure, psig	1100	Discharge Temperature, F	130

Cylinders	Bore, in	Stroke, in	Rod Diameter, in	Pocket Clearance, in^3	Total Cylinder Volume, in^3	Temperature, R	Pressure, psig	Calculated Moles	section volumes FT3 @ STP
1st Stage Cylinder	7.38	3.50	1.50	70.00	213	529	250	0.01	2
1st Stage Cylinder	7.38	3.50	1.50	70.00	213	529	600	0.01	5
2nd Stage Cylinder	4.63	3.50	1.50	30.00	83	665	1100	0.01	3
2nd Stage Cylinder	4.63	3.50	1.50	30.00	83	665	1100	0.01	3
Scrubbers/Suction & Discharge Drums	**OD, in**	**Height/Length, in**	**Total Volume, in^3**			**Temperature, R**	**Pressure, psig**	**Calculated Moles**	
1st Stage Scrubber	30.00	68.00	48066			529	250	1.30	501
1st Stage Suction Drum	18.00	52.00	13232			529	250	0.36	138
1st Stage Discharge Drum	18.00	84.50	21503			665	600	1.07	414
2nd Stage Scrubber	30.00	68.00	48066			589	600	2.71	1045
2nd Stage Suction Drum	10.75	52.00	4720			589	600	0.27	103
2nd Stage Discharge Drum	10.75	52.00	4720			675	1100	0.42	162
Cooler Section	**No. of Tubes**	**OD, in**	**Length, in**	**Total Tube Volume, in^3**		**Temperature, R**	**Pressure, psig**	**Calculated Moles**	
1st Stage Cooler Section	42	1.00	192	6333		665	600	0.32	122
2nd Stage Cooler Section	58	0.63	192	3471		675	1100	0.31	119
Piping	**OD, in**	**Length, in**	**Total Piping Volume, in^3**			**Temperature, R**	**Pressure, psig**	**Calculated Moles**	
1st Stage Piping	8.00	88	4423			529	250	0.12	46
2nd Stage Piping	6.00	62	1753			665	600	0.09	34
piping after Cooler	3.00	45	318			589	1100	0.03	13
Bypass	3.00	330	2333			589	1100	0.24	92
							Total Estimated Moles of Gas Discharged to Atmosphere per Blowdown =	7.25	
							Total Estimated Volume of Blowdown Gas, ft^3 @ STP (68F, 14.7 psia) =	2801	2801
								+10%	3081

ATTACHMENT L

Emission Unit Data Sheets

NATURAL GAS COMPRESSOR/GENERATOR ENGINE DATA SHEET

Source Identification Number[1]		S1		S2		S7	
Engine Manufacturer and Model		Caterpillar 3516B		Caterpillar 3516B		Caterpillar 3306 TA	
Manufacturer's Rated bhp/rpm		1380/1400		1380/1400		203/1800	
Source Status[2]		ES		**RS**		**RS**	
Date Installed/Modified/Removed[3]		Est. March 15, 2013		Est. March 15, 2013		Est. Dec 15, 2013	
Engine Manufactured/Reconstruction Date[4]		After Jan 01,2010		After Jan 01,2010		August 8, 2005	
Is this a Certified Stationary Spark Ignition Engine according to 40CFR60 Subpart JJJJ? (Yes or No)[5]		No		No		No	
Engine, Fuel and Combustion Data	Engine Type[6]	LB4S		LB4S		RB4S	
	APCD Type[7]	A/F +SCR		A/F +SCR		A/F +NSCR	
	Fuel Type[8]	RG		RG		RG	
	H_2S (gr/100 scf)	<1		<1		<1	
	Operating bhp/rpm	1380/1400		1380/1400		203/1800	
	BSFC (Btu/bhp-hr)	7500		7500		8098	
	Fuel throughput (ft^3/hr)	11,436		11,436		1324	
	Fuel throughput ($MMft^3$/yr)	100.18		100.18		11.59	
	Operation (hrs/yr)	8760		8760		8760	
Reference[9]	Potential Emissions[10]	lbs/hr	lbs/hr	lbs/hr	tons/yr	lbs/hr	tons/yr
MD	NO_X	1.52	6.66	1.52	6.66	0.90	3.92
MD	CO	4.41	19.32	4.41	19.32	0.90	3.92
MD	VOC	1.22	5.33	1.22	5.33	0.03	0.12
AP	SO_2	0.006	0.03	0.006	0.03	<0.01	0.04
AP	PM_{10}	0.103	0.45	0.103	0.45	0.03	0.14
MD	Formaldehyde	0.75	3.28	0.75	3.28	0.06	0.25
AP	Total HAPs	0.89	3.91	0.89	3.91	0.07	0.32

NATURAL GAS COMPRESSOR/GENERATOR ENGINE DATA SHEET

Source Identification Number[1]				S9	
Engine Manufacturer and Model				Caterpillar 3508 TALE	
Manufacturer's Rated bhp/rpm				630/1400	
Source Status[2]				**NS**	
Date Installed/Modified/Removed[3]				Upon Receipt of Permit	
Engine Manufactured/Reconstruction Date[4]					
Is this a Certified Stationary Spark Ignition Engine according to 40CFR60 Subpart JJJJ? (Yes or No)[5]				No	
Engine, Fuel and Combustion Data	Engine Type[6]			LB4S	
	APCD Type[7]			A/F +SCR	
	Fuel Type[8]			RG	
	H_2S (gr/100 scf)			<1	
	Operating bhp/rpm			630/1400	
	BSFC (Btu/bhp-hr)			8627	
	Fuel throughput (ft^3/hr)			4187	
	Fuel throughput ($MMft^3$/yr)			36.68	
	Operation (hrs/yr)			8760	
Reference[9]	Potential Emissions[10]	lbs/hr	tpy	lbs/hr	tpy
MD	NO_X			2.78	12.17
MD	CO			1.42	6.21
MD	VOC			0.25	1.10
AP	SO_2			<0.01	0.01
AP	PM_{10}			0.054	0.24
MD	Formaldehyde			0.194	0.85
AP	Total HAPs			0.27	1.20
EPA	CO_{2e}			953	4,172

1. Enter the appropriate Source Identification Number for each natural gas-fueled reciprocating internal combustion compressor/generator engine located at the compressor station. Multiple compressor engines should be designated CE-1, CE-2, CE-3 etc. Generator engines should be designated GE-1, GE-2, GE-3 etc. If more than three (3) engines exist, please use additional sheets.

2. Enter the Source Status using the following codes:

NS	Construction of New Source (installation)	ES	Existing Source
MS	Modification of Existing Source	RS	Removal of Source

3. Enter the date (or anticipated date) of the engine's installation (construction of source), modification or removal.

4. Enter the date that the engine was manufactured, modified or reconstructed.

5. Is the engine a certified stationary spark ignition internal combustion engine according to 40CFR60 Subpart JJJJ. If so, the engine and control device must be operated and maintained in accordance with the manufacturer's emission-related written instructions. You must keep records of conducted maintenance to demonstrate compliance, but no performance testing is required. If the certified engine is not operated and maintained in accordance with the manufacturer's emission-related written instructions, the engine will be considered a non-certified engine and you must demonstrate compliance according to 40CFR§60.4243a(2)(i) through (iii), as appropriate.

   Provide a manufacturer's data sheet for all engines being registered.

6. Enter the Engine Type designation(s) using the following codes:

LB2S	Lean Burn Two Stroke	RB4S	Rich Burn Four Stroke
LB4S	Lean Burn Four Stroke		

7. Enter the Air Pollution Control Device (APCD) type designation(s) using the following codes:

A/F	Air/Fuel Ratio	IR	Ignition Retard
HEIS	High Energy Ignition System	SIPC	Screw-in Precombustion Chambers
PSC	Prestratified Charge	LEC	Low Emission Combustion
NSCR	Rich Burn & Non-Selective Catalytic Reduction	SCR	Lean Burn & Selective Catalytic Reduction

8. Enter the Fuel Type using the following codes:

PQ	Pipeline Quality Natural Gas	RG	Raw Natural Gas

9. Enter the Potential Emissions Data Reference designation using the following codes. Attach all referenced data to this *Compressor/Generator Data Sheet(s)*.

MD	Manufacturer's Data	AP	AP-42	
GR	GRI-HAPCalc™	OT	Other _____	(please list)

10. Enter each engine's Potential to Emit (PTE) for the listed regulated pollutants in pounds per hour and tons per year. PTE shall be calculated at manufacturer's rated brake horsepower and may reflect reduction efficiencies of listed Air Pollution Control Devices. Emergency generator engines may use 500 hours of operation when calculating PTE. PTE data from this data sheet shall be incorporated in the *Emissions Summary Sheet*.

NATURAL GAS GLYCOL DEHYDRATION UNIT DATA SHEET

General Glycol Dehydration Unit Data		Manufacturer and Model		Natco	
		Max Dry Gas Flow Rate (mmscf/day)		40 MMCF/day	
		Design Heat Input (mmBtu/hr)		0.500 MMBTU/hr	
		Design Type (DEG or TEG)		TEG	
		Source Status[2]		**MS**	
		Date Installed/Modified/Removed[3]		January 2016	
		Regenerator Still Vent APCD[4]		CC	
		Fuel HV (Btu/scf)		1126 Btu/scf	
		H_2S Content (gr/100 scf)		<0.1g/scf	
		Operation (hrs/yr)		8760	
Source ID #[1]	Vent	Reference[5]	Potential Emissions[6]	lbs/hr	tons/yr
4S	Reboiler Vent **(Includes Still Vent)**	AP	NO_X	0.0385	0.168
		AP	CO	0.0323	0.141
		AP	VOC	0.0.5267	2.307
		AP	SO_2	<0.001	<0.001
		AP	PM_{10}	0.0029	0.013
4S	Glycol Regenerator Still Vent	ProMax™	VOC	0.5246	2.298
		ProMax™	Benzene	0.0255	0.112
		ProMax™	Ethylbenzene	0.0862	0.378
		ProMax™	Toluene	0.0171	0.075
		ProMax™	Xylenes	0.0796	0.348
		ProMax™	n-Hexane	0.0231	0.101

1. Enter the appropriate Source Identification Numbers for the glycol dehydration unit Reboiler Vent and glycol Regenerator Still Vent. The glycol dehydration unit Reboiler Vent and glycol Regenerator Still Vent should be designated RBV-1 and RSV-1, respectively. If the compressor station incorporates multiple glycol dehydration units, a *Glycol Dehydration Unit Data Sheet* shall be completed for each, using Source Identification #s RBV-2 and RSV-2, RBV-3 and RSV-3, etc.

2. Enter the Source Status using the following codes:

   NS Construction of New Source
   MS Modification of Existing Source
   ES Existing Source
   RS Removal of Source

3. Enter the date (or anticipated date) of the glycol dehydration unit's installation (construction of source), modification or removal.

4. Enter the Air Pollution Control Device (APCD) type designation using the following codes:

   NA None
   FL Flare
   TO Thermal Oxidizer
   CD Condenser
   CC Condenser/Combustion Combination

5. Enter the Potential Emissions Data Reference designation using the following codes:

MD	Manufacturer's Data	AP	AP-42	
GR	GRI-GLYCalc™	OT	Other _____	(please list)

6. Enter the Reboiler Vent and glycol Regenerator Still Vent Potential to Emit (PTE) for the listed regulated pollutants in lbs per hour and tons per year. The glycol Regenerator Still Vent potential emissions may be determined using the most recent version of the thermodynamic software model GRI-GLYCalc™ (Radian International LLC & Gas Research Institute). Attach all referenced Potential Emissions Data (or calculations) and the GRI-GLYCalc *Aggregate Calculations Report* to this *Glycol Dehydration Unit Data Sheet(s)*. This PTE data shall be incorporated in the *Emissions Summary Sheet*.

Include a copy of the GRI-GLYCalc™ analysis. This includes a printout of the aggregate calculations report, which shall include emissions reports, equipment reports, and stream reports.

***An explanation of input parameters and examples, when using GRI-GLYCalc™ is available on our website.**

NOTE: ProMax was utilized in lieu of GRI-GLYCalc. A GLYCalc run was completed and found to match well with the ProMax results. The ProMax data was used instead of GLYCalc for overall facility model consistency.

West Virginia Department of Environmental Protection

DIVISION OF AIR QUALITY : (304) 926-0475
WEB PAGE: http:\\www.wvdep.org

Division of Air Quality

40 CFR Part 63; Subpart HH & HHH Registration Form

Complete this form for any oil and natural gas production or natural gas transmission and storage facility that uses an affected unit under HH/HHH, whether subject or not.

Section A: Facility Description

Affected facility actual annual average natural gas throughput (scf/day):	40 MMSCF/Day		
Affected facility actual annual average hydrocarbon liquid throughput: (bbl/day):			
The affected facility processes, upgrades, or stores hydrocarbon liquids prior to custody transfer.	Yes	**X**	No
The affected facility processes, upgrades, or stores natural gas prior to the point at which natural gas (NG) enters the NG transmission and storage source category or is delivered to the end user. The affected facility is: **X** prior to a NG processing plant ☐ a NG processing plant ☐ prior to the point of custody transfer and there is no NG processing plant	Yes	**X**	No
The affected facility transports or stores natural gas prior to entering the pipeline to a local distribution company or to a final end user (if there is no local distribution company).	Yes	**X**	No
The affected facility exclusively processes, stores, or transfers black oil. Initial producing gas-to-oil ratio (GOR): _____scf/bbl API gravity: _____degrees	Yes	**X**	No

Section B: Dehydration Unit (if applicable) [1]

Description:	**40 MMCFD Glycol Dehydrator**		
Date of Installation: **11/01/2012**	Annual Operating Hours: **8760**	Burner rating (MMbtu/hr): **0.50**	
Exhaust Stack Height (ft): **16**	Stack Diameter (ft): **0.667**	Stack Temp. (^oF): **600**	
Glycol Type:	☒ TEG ☐ EG ☐ Other:		
Glycol Pump Type:	☐ Electric ☒ Gas If gas, what is the volume ratio? ___**0.08**__ACFM/gpm		
Condenser installed?	☒ Yes ☐ No Exit Temp. ___ ^oF Condenser Pressure _____psig		
Incinerator/flare installed?	☐ Yes ☒ No Destruction Eff. _____%		
Other controls installed?	☒ Yes ☐ No Describe: Vapors from Condenser to Reboiler as Fuel		
Wet Gas[2]: (Upstream of Contact Tower)	Gas Temp.: __**100** ^oF Gas Pressure __**900**_ psig Saturated Gas? ☒ Yes ☐ No If no, water content _____ lb/MMSCF		
Dry Gas: (Downstream of Contact Tower)	Gas Flowrate(MMSCFD) Actual _____ Design __40 MMSCF/Day___ Water Content __**7.0**___ lb/MMSCF		
Lean Glycol:	Circulation rate (gpm) Actual[3] ____**2.0**___ Maximum[4] ____**2.5**__ Pump make/model: TBD		
Glycol Flash Tank (if applicable):	Temp.: ____**90**___ ^oF Pressure ___**700**_ psig Vented? Yes ☐ No ☒ If no, describe vapor control: To Reboiler as Fuel		
Stripping Gas (if applicable):	Source of gas: N/A Rate _____ scfm		

Please attach the following required dehydration unit information:

1. System map indicating the chain of custody information. See Page 43 of this document for an example of a gas flow schematic. It is not intended that the applicant provide this level of detail for all sources. The level of detail that is necessary is to establish where the custody transfer points are located. This can be accomplished by submitting a process flow diagram indicating custody transfer points and the natural gas flow. However, the DAQ reserves the right to request more detailed information in order to make the necessary decisions.
2. Extended gas analysis from the Wet Gas Stream including mole percents of C_1-C_8, benzene, ethylbenzene, toluene, xylene and n-Hexane, using Gas Processors Association (GPA) 2286 (or similar). A sample should be taken from the inlet gas line, downstream from any inlet separator, and using a manifold to remove entrained liquids from the sample and a probe to collect the sample from the center of the gas line. GPA standard 2166 reference method or a modified version of EPA Method TO-14, (or similar) should be used.
3. GRI-GLYCalc Ver. 3.0 aggregate report based on maximum Lean Glycol circulation rate and maximum throughput.
4. Detailed calculations of gas or hydrocarbon flow rate.

Section C: Facility NESHAPS Subpart HH/HHH status

Affected facility status: (choose only one)	☐ Subject to Subpart HH		
	☐ Subject to Subpart HHH		
	☒ Not Subject because:	☒ < 10/25 TPY	
		☐ Affected facility exclusively handles black oil	
		☐ The facility wide actual annual average NG throughput is < 650 thousand scf/day and facility wide actual annual average hydrocarbon liquid is < 250 bpd	
		☐ No affected source is present	

ATTACHMENT M

Air Pollution Control Device Sheets

DCL America Inc.

12620 FM 1960 W, Ste A4 Box # 560, Houston, TX 77065
Tel.: 877-897-9759 Fax: 281-605-5858 E-mail: info@dclamerica.com

To	Chris Magee	**Phone**	
	USA Compression	**Fax**	
Date	February 27, 2015	**Email**	cmagee@usacompression.com

RE: Emissions Guarantee – Unit 1828

ENGINE DATA

Engine model	**Cat 3508TALE**
Power	630 bhp
Fuel	PQNG
Exhaust Flow	6039 lb/hr
Exhaust Temperature	813 F

CATALYST SYSTEM DATA

Catalyst Model	DC64-10
Catalyst Type	Oxidation A
Number of Elements	1
Element Diameter	24.23"x3.50"
Cell Density	300 cpsi

EMISSION REQUIREMENTS

Exhaust Gas Component	% Reduction
NOx	0
CO	50
VOC (NMNEHC)	50
HCHO	50

Regards,

Sam Kirk
Regional Sales Manager
DCL America
281-253-3091

USA COMPRESSION

USA Compression Unit 1828 Caterpillar G3508TALE Engine Emissions

Date of Manufacture	May 23, 2007	Engine Serial Number	WPN00224	Date Modified/Reconstructed	Not Any
Driver Rated HP	630	Rated Speed in RPM	1400	Combustion Type	Spark Ignited 4 Stroke
Number of Cylinders	8	Compression Ratio	8:1	Combustion Setting	Lean Burn
Total Displacement, in^3	2105	Fuel Delivery Method	Carburetor	Combustion Air Treatment	T.C./Aftercooled

Raw Engine Emissions (customer supplied Fuel Gas with little to no H2S)

Fuel Consumption 7820 *LHV BTU/bhp-hr* *or* 8627 *HHV BTU/bhp-hr*
Altitude 1200 *ft*
Maximum Air Inlet Temp 90 *F*

	g/bhp-hr [1]	lb/MMBTU [2]	lb/hr	TPY
Nitrogen Oxides (NOx)	2.0		2.78	12.17
Carbon Monoxide (CO)	2.04		2.83	12.41
Volatile Organic Compounds (VOC or NMNEHC)	0.36		0.50	2.19
Formaldehyde (CH2O)	0.28		0.39	1.70
Particulate Matter (PM) Filterable+Condensable		9.99E-03	5.43E-02	2.38E-01
Sulfur Dioxide (SO2)		5.88E-04	3.20E-03	1.40E-02

	g/bhp-hr [1]	lb/hr	Metric Tonne/yr
Carbon Dioxide (CO2)	544	756	3002
Methane (CH4)	1.45	2.01	8.00

[1] g/bhp-hr are based on Caterpillar Specifications (GERP) customer supplied fuel gas, 1200 ft elevation, and 90 F Max Air Inlet Temperature.
Note that g/bhp-hr values are Nominal and are not representative of Not-To-Exceed Values and are based on 100% Load Operation.
It is recommended to add a safety margin to the above emissions for Air Permitting to allow for operational flexibility and variations in fuel gas composition.

[2] Emission Factor obtained from EPA's AP-42, Fifth Edition, Volume I, Chapter 3: Stationary Internal Combution Sources (Section 3.2 Natural Gas-Fired Reciprocating Engines, Table 3.2-2).

Catalytic Converter Emissions

Catalytic Converter Make and Model: *DCL DC64A-10*
Element Type: *Oxidation*
Number of Elements in Housing: *1*
Air/Fuel Ratio Control *ADEM3, O2 feedback*

	% Reduction	lb/hr	TPY
Nitrogen Oxides (NOx)	0	2.78	12.17
Carbon Monoxide (CO)	50	1.42	6.21
Volatile Organic Compounds (VOC or NMNEHC)	50	0.25	1.10
Formaldehyde (CH2O)	50	0.19	0.85
Particulate Matter (PM)	0	5.43E-02	2.38E-01
Sulfur Dioxide (SO2)	0	3.20E-03	1.40E-02

	% Reduction	lb/hr	Metric Tonne/yr
Carbon Dioxide (CO2)	0	756	3002
Methane (CH4)	0	2.01	8.00

G3508

NON-CURRENT

GAS COMPRESSION APPLICATION

GAS ENGINE SITE SPECIFIC TECHNICAL DATA

CATERPILLAR®

Triad Hunter Spencer Collins G3508 u1828 9-14-15

ENGINE SPEED (rpm):	1400
COMPRESSION RATIO:	8:1
AFTERCOOLER TYPE:	SCAC
JACKET WATER OUTLET (°F):	210
ASPIRATION:	TA
COOLING SYSTEM:	JW+OC, AC
CONTROL SYSTEM:	ADEM3
EXHAUST MANIFOLD:	ASWC
COMBUSTION:	LOW EMISSION
NOx EMISSION LEVEL (g/bhp-hr NOx):	2.0
SET POINT TIMING:	26

RATING STRATEGY:	STANDARD
RATING LEVEL:	CONTINUOUS
FUEL SYSTEM:	HPG IMPCO WITH AIR FUEL RATIO CONTROL
SITE CONDITIONS:	
FUEL:	Triad Spencer Collins 9-14-15
FUEL PRESSURE RANGE(psig):	35.0-40.0
FUEL METHANE NUMBER:	62.5
FUEL LHV (Btu/scf):	1098
ALTITUDE(ft):	1200
MAXIMUM INLET AIR TEMPERATURE(°F):	90
STANDARD RATED POWER:	630 bhp@1400rpm

RATING		NOTES	LOAD	MAXIMUM RATING	SITE RATING AT MAXIMUM INLET AIR TEMPERATURE		
				100%	100%	75%	51%
ENGINE POWER	(WITHOUT FAN)	(1)	bhp	630	623	467	315
INLET AIR TEMPERATURE			°F	83	90	90	90
ENGINE DATA							
FUEL CONSUMPTION (LHV)		(2)	Btu/bhp-hr	7820	7838	8259	9194
FUEL CONSUMPTION (HHV)		(2)	Btu/bhp-hr	8627	8648	9113	10144
AIR FLOW (@inlet air temp, 14.7 psia)	(WET)	(3)(4)	ft3/min	1327	1331	1042	746
AIR FLOW	(WET)	(3)(4)	lb/hr	5819	5760	4509	3228
FUEL FLOW (60°F, 14.7 psia)			scfm	75	74	59	44
INLET MANIFOLD PRESSURE		(5)	in Hg(abs)	64.1	63.5	50.2	37.5
EXHAUST TEMPERATURE - ENGINE OUTLET		(6)	°F	855	855	848	834
EXHAUST GAS FLOW (@engine outlet temp, 14.5 psia)	(WET)	(7)(4)	ft3/min	3478	3443	2683	1907
EXHAUST GAS MASS FLOW	(WET)	(7)(4)	lb/hr	6058	5997	4696	3369
EMISSIONS DATA - ENGINE OUT							
NOx (as NO2)		(8)(9)	g/bhp-hr	2.00	2.00	2.00	2.00
CO		(8)(9)	g/bhp-hr	2.04	2.04	2.15	2.13
THC (mol. wt. of 15.84)		(8)(9)	g/bhp-hr	2.39	2.40	2.52	2.66
NMHC (mol. wt. of 15.84)		(8)(9)	g/bhp-hr	0.94	0.94	0.99	1.04
NMNEHC (VOCs) (mol. wt. of 15.84)		(8)(9)(10)	g/bhp-hr	0.36	0.36	0.37	0.39
HCHO (Formaldehyde)		(8)(9)	g/bhp-hr	0.28	0.28	0.28	0.31
CO2		(8)(9)	g/bhp-hr	544	545	573	636
EXHAUST OXYGEN		(8)(11)	% DRY	7.4	7.4	7.3	6.8
HEAT REJECTION							
HEAT REJ. TO JACKET WATER (JW)		(12)	Btu/min	22758	22668	19743	17381
HEAT REJ. TO ATMOSPHERE		(12)	Btu/min	3188	3163	2638	2126
HEAT REJ. TO LUBE OIL (OC)		(12)	Btu/min	3599	3584	3122	2748
HEAT REJ. TO AFTERCOOLER (AC)		(12)(13)	Btu/min	4614	4614	2520	908
COOLING SYSTEM SIZING CRITERIA							
TOTAL JACKET WATER CIRCUIT (JW+OC)		(13)	Btu/min	29352			
TOTAL AFTERCOOLER CIRCUIT (AC)		(13)(14)	Btu/min	4845			
A cooling system safety factor of 0% has been added to the cooling system sizing criteria.							

CONDITIONS AND DEFINITIONS

Engine rating obtained and presented in accordance with ISO 3046/1, adjusted for fuel, site altitude and site inlet air temperature. 100% rating at maximum inlet air temperature is the maximum engine capability for the specified fuel at site altitude and maximum site inlet air temperature. Maximum rating is the maximum capability at the specified aftercooler inlet temperature for the specified fuel at site altitude and reduced inlet air temperature. Lowest load point is the lowest continuous duty operating load allowed. No overload permitted at rating shown.

For notes information consult page three.

*****WARNINGS ISSUED FOR THIS RATING CONSULT PAGE 3*****

PREPARED BY: Chris Magee, USAC
Data generated by Gas Engine Rating Pro Version 5.04.01
Ref. Data Set DM8592-02-001, WPN00001-WPN00242, Printed 14Sep2015

Triad Hunter Spencer Collins G3508 u1828 9-14-15

Engine Power vs. Inlet Air Temperature

Data represents temperature sweep at 1200 ft and 1400 rpm

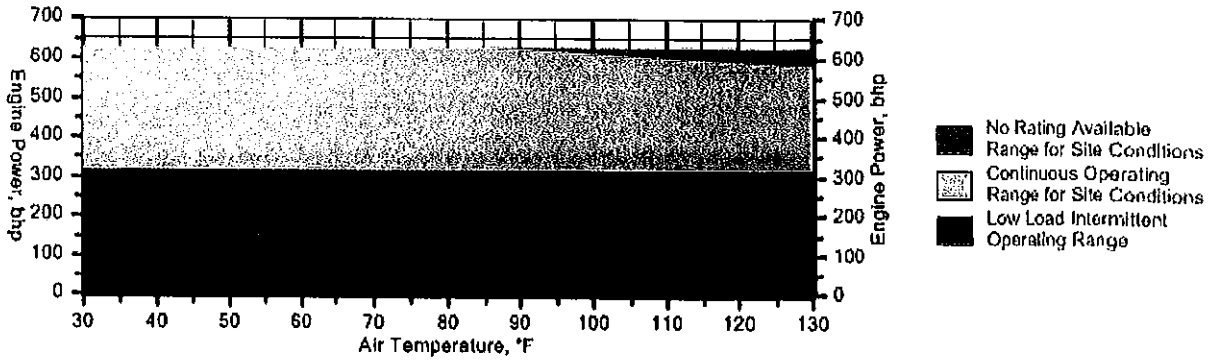

Engine Power vs. Engine Speed

Data represents speed sweep at 1200 ft and 90 °F

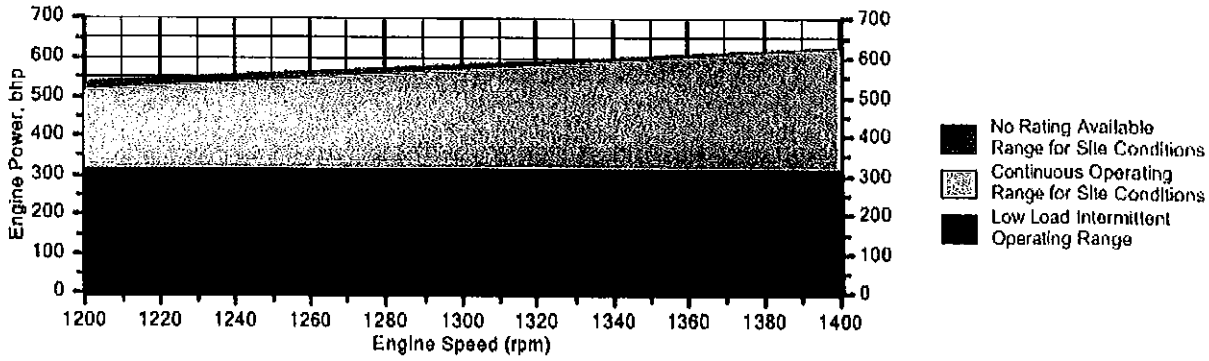

Engine Torque vs. Engine Speed

Data represents speed sweep at 1200 ft and 90 °F

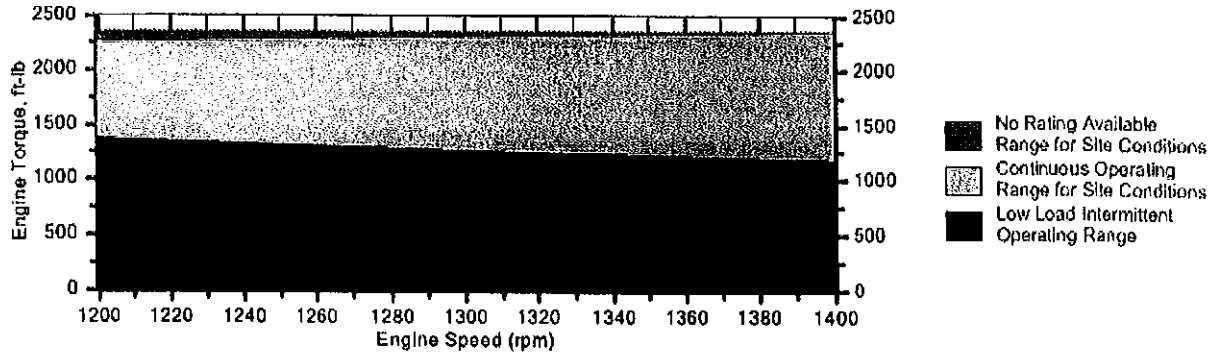

Note: At site conditions of 1200 ft and 90°F inlet air temp., constant torque can be maintained down to 1400 rpm. The minimum speed for loading at these conditions is 1200 rpm.

PREPARED BY: Chris Magee, USAC
Data generated by Gas Engine Rating Pro Version 5.04.01
Ref. Data Set DM8592-02-001, WPN00001-WPN00242, Printed 14Sep2015

NOTES

1. Engine rating is with two engine driven water pumps. Tolerance is ± 3% of full load.

2. Fuel consumption tolerance is ± 3.0% of full load data.

3. Air flow value is on a 'wet' basis. Flow is a nominal value with a tolerance of ± 5 %.

4. Inlet and Exhaust Restrictions must not exceed A&I limits based on full load flow rates from the standard technical data sheet.

5. Inlet manifold pressure is a nominal value with a tolerance of ± 5 %.

6. Exhaust temperature is a nominal value with a tolerance of (+)63°F, (-)54°F.

7. Exhaust flow value is on a "wet" basis. Flow is a nominal value with a tolerance of ± 6 %.

8. Emissions data is at engine exhaust flange prior to any after treatment.

9. Emission values are based on engine operating at steady state conditions, adjusted to the specified NOx level at 100% load. Fuel methane number cannot vary more than ± 3. NOx tolerances are ± +111 %, -96 % of specified value. All other emission values listed are higher than nominal levels to allow for instrumentation, measurement, and engine-to-engine variations. They indicate "Not to Exceed" values. THC, NMHC, and NMNEHC do not include aldehydes.

10. VOCs - Volatile organic compounds as defined in US EPA 40 CFR 60, subpart JJJJ

11. Exhaust Oxygen level is the result of adjusting the engine to operate at the specified NOx level. Tolerance is ± 0.5.

12. Heat rejection values are nominal. Tolerances, based on treated water, are ± 10% for jacket water circuit, ± 50% for radiation, ± 20% for lube oil circuit, and ± 5% for aftercooler circuit.

13. Aftercooler heat rejection includes an aftercooler heat rejection factor for the site elevation and inlet air temperature specified. Aftercooler heat rejection values at part load are for reference only. Do not use part load data for heat exchanger sizing.

14. Cooling system sizing criteria are maximum circuit heat rejection for the site, with applied tolerances.

WARNING(S):
1. The lower heating value of the fuel is higher than or equal to 1050 Btu/scf and lower than 1250 Btu/scf. May require up to two 7E-1569 valve washers in the carburetor to lean out the part load operating points. The lower heating value of the fuel is higher than the known capabilities of the air fuel ratio control. To achieve part load NOx emissions, manual adjustment of the carburator and air fuel ratio control settings will be required.

Constituent	Abbrev	Mole %	Norm
Water Vapor	H2O	0.0000	0.0000
Methane	CH4	76.9704	76.9704
Ethane	C2H6	15.4382	15.4382
Propane	C3H8	4.5030	4.5030
Isobutane	iso-C4H1O	0.3711	0.3711
Norbutane	nor-C4H1O	0.7589	0.7589
Isopentane	iso-C5H12	0.0808	0.0808
Norpentane	nor-C5H12	0.0760	0.0760
Hexane	C6H14	0.0000	0.0000
Heptane	C7H16	0.0000	0.0000
Nitrogen	N2	1.4259	1.4259
Carbon Dioxide	CO2	0.1589	0.1589
Hydrogen Sulfide	H2S	0.0000	0.0000
Carbon Monoxide	CO	0.0000	0.0000
Hydrogen	H2	0.0000	0.0000
Oxygen	O2	0.2168	0.2168
Helium	HE	0.0000	0.0000
Neopentane	neo-C5H12	0.0000	0.0000
Octane	C8H18	0.0000	0.0000
Nonane	C9H20	0.0000	0.0000
Ethylene	C2H4	0.0000	0.0000
Propylene	C3H6	0.0000	0.0000
TOTAL (Volume %)		100.0000	100.0000

Fuel Makeup:	Triad Spencer Collins
Unit of Measure:	English

Calculated Fuel Properties

Caterpillar Methane Number:	62.5
Lower Heating Value (Btu/scf):	1098
Higher Heating Value (Btu/scf):	1211
WOBBE Index (Btu/scf):	1312
THC: Free Inert Ratio:	127.74
Total % Inerts (% N2, CO2, He):	1.58%
RPC (%) (To 905 Btu/scf Fuel):	100%
Compressibility Factor:	0.997
Stoich A/F Ratio (Vol/Vol):	11.39
Stoich A/F Ratio (Mass/Mass):	16.26
Specific Gravity (Relative to Air):	0.700
Specific Heat Constant (K):	1.284

CONDITIONS AND DEFINITIONS

Caterpillar Methane Number represents the knock resistance of a gaseous fuel. It should be used with the Caterpillar Fuel Usage Guide for the engine and rating to determine the rating for the fuel specified. A Fuel Usage Guide for each rating is included on page 2 of its standard technical data sheet.

RPC always applies to naturally aspirated (NA) engines, and turbocharged (TA or LE) engines only when they are derated for altitude and ambient site conditions.

Project specific technical data sheets generated by the Caterpillar Gas Engine Rating Pro program take the Caterpillar Methane Number and RPC into account when generating a site rating.

Fuel properties for Btu/scf calculations are at 60F and 14.696 psia.

Caterpillar shall have no liability in law or equity, for damages, consequently or otherwise, arising from use of program and related material or any part thereof.

FUEL LIQUIDS

Field gases, well head gases, and associated gases typically contain liquid water and heavy hydrocarbons entrained in the gas. To prevent detonation and severe damage to the engine, hydrocarbon liquids must not be allowed to enter the engine fuel system. To remove liquids, a liquid separator and coalescing filter are recommended, with an automatic drain and collection tank to prevent contamination of the ground in accordance with local codes and standards.

To avoid water condensation in the engine or fuel lines, limit the relative humidity of water in the fuel to 80% at the minimum fuel operating temperature.

WARNING(S)

1. The lower heating value of the fuel is higher than or equal to 1050 Btu/scf and lower than 1250 Btu/scf. May require up to two 7E-1569 valve washers in the carburetor to lean out the part load operating points. The lower heating value of the fuel is higher than the known capabilities of the air fuel ratio control. To achieve part load NOx emissions, manual adjustment of the carburator and air fuel ratio control settings will be required.

PREPARED BY: Chris Magee, USAC
Data generated by Gas Engine Rating Pro Version 5.04.01
Ref. Data Set DM8592-02-001, WPN00001-WPN00242, Printed 14Sep2015

QUAD O COMPLIANCE INFORMATION & QUESTIONS

ABUTEC™ Advanced Burner Technologies

HOME PRODUCTS SERVICE COMPANY MAN

ABUTEC 100

Don't combust – ABUTEC 100 is Quad O Approved

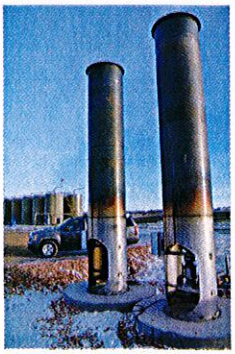

The ABUTEC 100 (SCUF MTF 2.7), has been approved by the Environmental Protection Agency (EPA) as having achieved specific performance requirements related to emissions. Read the full report here.

The announcement relieves owners and operators from the burden of performing third-party testing on approved combustion devices. Because the ABUTEC 20 and ABUTEC 100 have been approved,these owners and operators will save time and expense.

For larger sites that need a customizable solution for emission control, the ABUTEC 100 is an ideal addition. Because it meets all government regulations for vapor combustion, the ABUTEC 100 lets your facility remain compliant and in control of your emissions.

The reliability of the ABUTEC 100 is second to none, especially for remote locations without available electricity. It is able to be paired with other systems, giving your facility exactly the combustion you require. Additionally, the ABUTEC 100 is easy to install, and works in even the toughest environmental conditions.

View Oil and Gas Brochure

Read about the ABUTEC 100 in action

Key Features of the ABUTEC 100:

- Quad O Compliant Ready
- Local Service Team availability
- Low Capital and Operating Costs
- Meets 40 CFR 60.18 regulations
- Flexible & Scalable System

- Continuous pilot
- 99%+ Destruction Efficiency (Independent 3rd party tested)
- Very High Turndown Ratio
- Scalable flow rates – from 20-100 MSCFD
- Inlet pressure as low as 2oz/in² and up to 8oz/in²
- Capable of 9,212,400 BTU/hour
- TERO License from Three Affiliated Tribes
- Solar Panel functionality
- Profire 2100 Control Panel for standard units
- SCADA integration with control panel for remote monitoring
- Stainless steel construction

Customizing the ABUTEC 100

The ABUTEC 100 can be paired with the ABUTEC High Pressure (HP) units to give your site the high/low pressure solution it needs.

The HP 1500 and HP 3000 can be installed as a stand-alone unit, or paired with the ABUTEC 100 on the same skid or included on the same site on a different skid.

Learn more about HP + ABUTEC Integrated Systems

Check out our Case Studies and Blog Posts

ABUTEC Units Bring Safety and Reliability to Your Site

2/17/2015 · 0 Comments

At ABUTEC, safety and reliability are our No. 1 priority. Moreover, we recognize that...

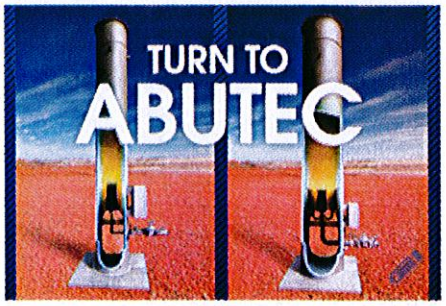

Turn to ABUTEC as North Dakota turns up the regulations

7/22/2014 · 0 Comments

On July 1, 2014, the North Dakota Industrial Commission cracked down on gas flaring...

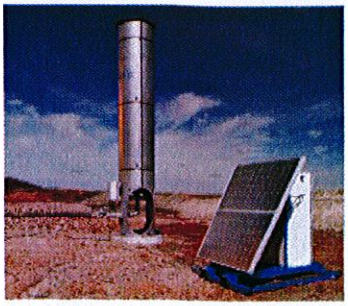

General Arrangement Drawing

NOTE: This drawing is intended for your review and approval of the general arrangement for an *ABUTEC 100*
Some dimensions are subject to change during the final engineering phase of this project. "As Built" drawings will be provided at engineering completion.

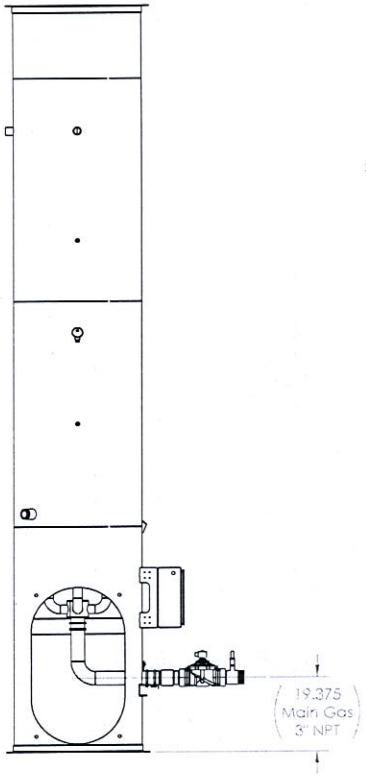

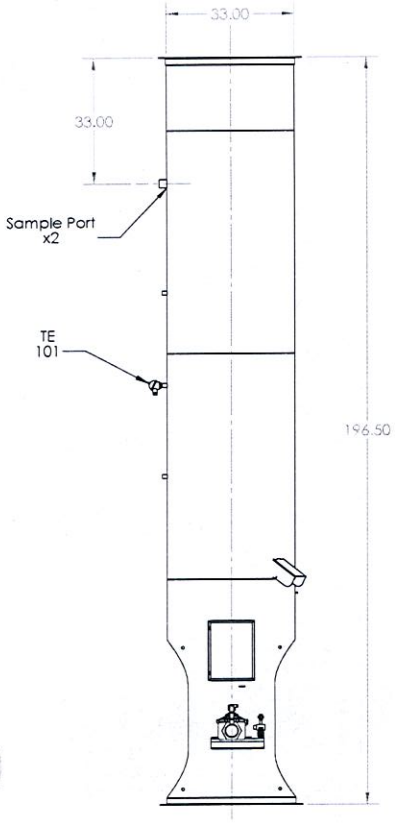

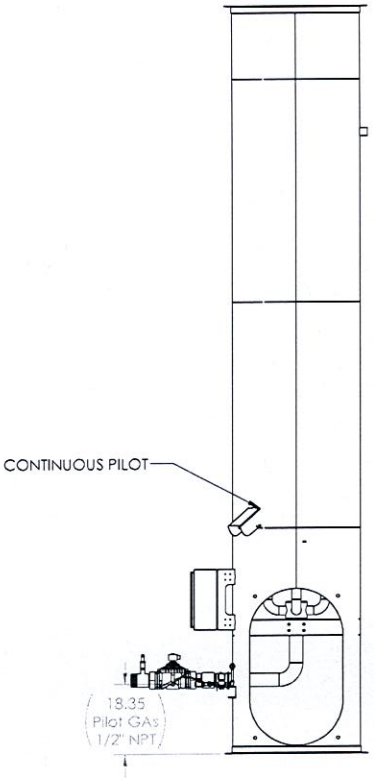

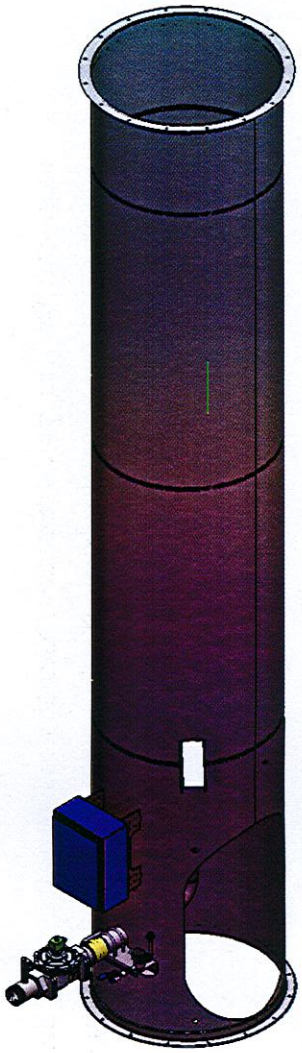

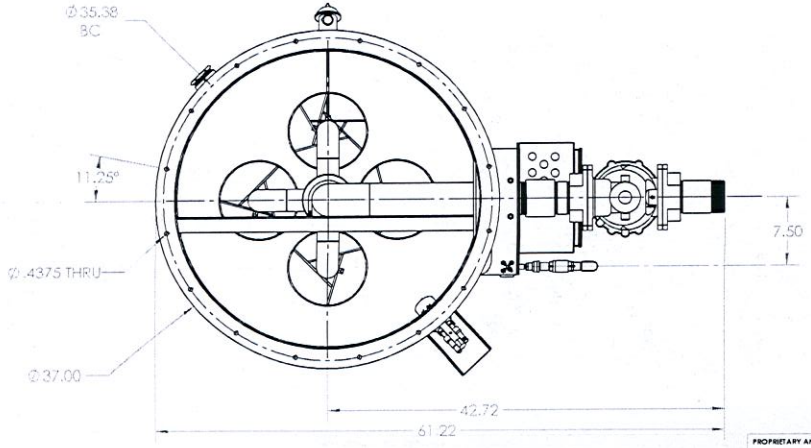

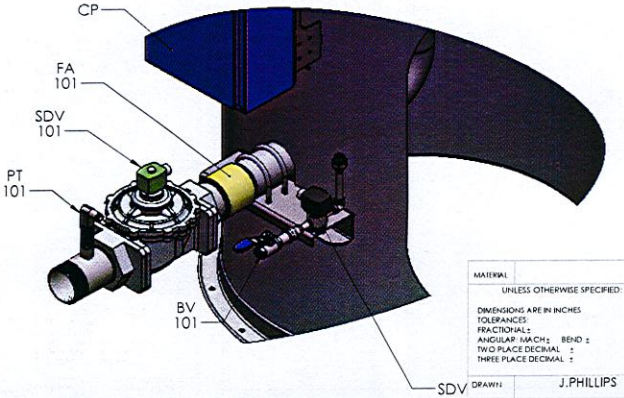

MATERIAL		ABUTEC Advanced Burner Technologies	
UNLESS OTHERWISE SPECIFIED: DIMENSIONS ARE IN INCHES; TOLERANCES: FRACTIONAL ±; ANGULAR: MACH ± BEND ±; TWO PLACE DECIMAL ±; THREE PLACE DECIMAL ±		TITLE: ABUTEC 100	
DRAWN	J.PHILLIPS	SIZE C	DWG. NO. ABUTEC-100GAD	REV
CHECKED				
ENG APPR.	HvP	SCALE: 1:24	WEIGHT: 975.41	SHEET 1 OF 1

PROPRIETARY AND CONFIDENTIAL

ALL IDEAS, DESIGNS, ARRANGEMENTS, AND PLANS INDICATED OR REPRESENTED BY THIS DRAWING ARE OWNED BY ABUTEC LLC, AND WERE CREATED, EVOLVED AND DEVELOPED FOR USE ON AND IN CONNECTION WITH THE SPECIFIED PROJECT. NONE SUCH IDEAS, DESIGNS, ARRANGEMENTS OR PLANS SHALL BE USED BY OR DISCLOSED TO ANY PERSON, FIRM, OR CORPORATION FOR ANY PURPOSE WHATSOEVER WITHOUT THE WRITTEN PERMISSION OF ABUTEC LLC.

ADVANCED INDUSTRIAL RESOURCES, INC.

MANUFACTURER'S CERTIFICATION PERFORMANCE TEST
ENCLOSED GAS VAPOR COMBUSTOR CERTIFICATION TEST
ENCLOSED GAS VAPOR COMBUSTORS

(SMALL COMBUSTION UTILITY FLARE (SCUF) MTF 0.7 AND MTF 2.7)

AT
ABUTEC – ADVANCED BURNER TECHNOLOGIES
CHATTANOOGA, TENNESSEE

PREPARED FOR:

ABUTEC™ Advanced Burner Technologies

2959 CHEROKEE STREET, SUITE 101
KENNESAW, GEORGIA 30144

PREPARED BY:

ADVANCED INDUSTRIAL RESOURCES, INC.
3407 NOVIS POINTE
ACWORTH, GEORGIA 30101

OCTOBER 18-23, 2012

ADVANCED INDUSTRIAL RESOURCES, INC.

CERTIFICATION SHEET

Having conducted the Technical Review of this report, I hereby certify the data, information, results, and calculations in this report to be accurate and true according to the methods and procedures used.

December 13, 2012

Derek Stephens
Technical Director
Advanced Industrial Resources

Date

Having written and prepared this report, I hereby certify that the data, information and results in this report to be correct and all inclusive of the necessary information required for a complete third-party review of the testing event.

December 13, 2012

Steven Haigh
Report Preparation Director
Advanced Industrial Resources

Date

Having supervised all aspects of the field testing, I hereby certify the equipment preparation, field sample collection procedures, and all equipment calibrations were conducted in accordance to the applicable methodologies.

October 26, 2012

Bill Nelson
Field Project Supervisor
Advanced Industrial Resources

Date

TABLE OF CONTENTS

LIST OF APPENDICES

1.0 INTRODUCTION

1.1 SUMMARY OF TEST PROGRAM

ABUTEC, an acronym for Advanced Burner Technologies, is an international manufacturer of Environmentally Friendly Combustion Solutions. ABUTEC specializes in offering high efficiency, low emission, burners and flares to various industry segments and applications. ABUTEC manufactures Infrared Burners, Enclosed Flares, Vapor Combustors, Incinerators, Thermal Oxidizers, and CHP "Gas-to-Energy" systems all aimed at reducing plant emissions and increasing efficiency.

ABUTEC is seeking Manufacturers' Certification in accordance to 40 CFR Part 60 Subpart OOOO 60.5413(d) for two (2) models of Enclosed Gas Vapor Combustors including the *Small Combustion Utility Flare (SCUF) MTF 0.7* and *MTF 2.7*. These units are manufactured at ABUTEC's manufacturing facility in Chattanooga, Tennessee.

The following test report describes the sampling and measurement procedures that were used to certify the subject combustors in accordance to Subpart OOOO 60.5413(d). Upon inquiry into the certification process to Mr. Steffan Johnson of the EPA's Measurement Policy Group, it was made aware to AIR and ABUTEC that the Federal Register Volume 77, Number 159 issued on August 16, 2012 contained incorrect information regarding the performance test procedures used to 'manufacturer certify' enclosed combustors. As directed in email correspondence from Mr. Johnson received on September 13, 2012, the test program is to be conducted in accordance to guidelines presented in 40 CFR Part 63 Subpart HH 63.1282(g). It was also indicated by Mr. Johnson at that time that it was anticipated that 60 Subpart OOOO 60.5413(d) test requirements would be corrected and updated in a later revision to the Subpart and an additional Federal Register will be issued as applicable.

However, through additional communication with Mr. Johnson on December 3, 2012, it was determined that there were no current plans for any updated revisions to 60 Subpart OOOO in the near term and that testing needed to be conducted and results assessed in accordance to the currently issued regulation. As stated, this information was not learned until ***after*** the testing was completed. Therefore, the test program was conducted in accordance to 63 Subpart HH 63.1282(g) as described above and the associated site-specific test protocol. The major difference between the two regulatory guidance

documents is in the quantity of inlet fuel gas samples to be collected. 63 Subpart HH calls for one (1) inlet fuel sample to be collected per test condition over a period of at least three (3) hours while 60 Subpart OOOO calls for three (3) inlet fuel samples to be collected per test condition over a period of at least one (1) hour per test run. Additionally, 63 Subpart HH does not require the fuel samples to be analyzed for sulfur compounds while 60 Subpart OOOO does require the sulfur compounds to be analyzed. It is noted that although the sulfur compounds were not initially required to be quantified, in fact they were for this test program.

In accordance to 63.1282(g) and 60.5413(d), testing on each unit included determining the inlet volumetric flow rate to the combustors as well as collecting inlet fuel samples for content determination. Additionally, testing on the combustor exhausts included determining the volumetric flow rates, molecular weight, exhaust gas contents, carbon monoxide, visual emissions, and volatile organic compounds measured as propane. Testing on each unit was conducted under four (4) separate operating conditions, as described in this test report.

Testing was conducted on October 18-23, 2012. All testing and sample analysis, as applicable, was conducted by Advanced Industrial Resources, Inc. (*AIR*) in accordance with approved USEPA sampling methods (40 CFR 60 Appendix A Method 1, 2, 2A, 3, 3B, 3C, 4, 10, 22, 25A, 205) and ASTM analytical methods (ASTM D1945, ASTM D3588).

1.2 KEY PERSONNEL

The key personnel who coordinated and this Test Report and their telephone numbers are:

Brad Ward, ABUTEC	770-846-2554
Derek Stephens, Advanced Industrial Resources	800-224-5007
Scott Wilson, Advanced Industrial Resources	404-843-2100

2.0 PLANT AND SAMPLING LOCATION DESCRIPTIONS

2.1 PROCESS & CONTROL EQUIPMENT DESCRIPTION

ABUTEC manufactures several models of Enclosed Gas Vapor Combustors (Combustors). The company seeks 'manufacturers' certification' on two (2) specific models currently in production in accordance to 40 CFR Part 60 Subpart OOOO 60.5413(d). These models include the *Small Combustion Utility Flare (SCUF) MTF 0.7* and *MTF 2.7*.

Testing consisted of four (4) operating conditions per source with three (3), sixty (60) minute tests being conducted under each condition:

Condition 1: 90–100 percent of maximum design rate (fixed rate).

Condition 2: 70–100–70 percent (ramp up, ramp down).

Condition 3: 30–70–30 percent (ramp up, ramp down).

Condition 4: 0–30–0 percent (ramp up, ramp down).

Minimum and maximum design rates are determined by the manufacturer. Through discussion with the manufacturer's representative, Mr. Brad Ward of ABUTEC, it was determined that the minimum design rate (i.e. 0%) for the MTF 2.7 unit was 20 standard cubic feet per minute (SCFM) and the maximum design rate (100%) was 100 SCFM. The minimum design rate for the MTF 0.7 unit was 5 SCFM and maximum was 25 SCFM.

2.2 SAMPLING LOCATION

The (SCUF) MTF 0.7 exhaust stack has a circular cross section with an internal diameter of approximately 18.5 inches. The sampling location is located 3.6 equivalent diameters downstream from the nearest upstream flow disturbance and 4.9 equivalent diameters upstream from the stack exhaust. Two (2) sampling ports oriented 90 degrees to one

another in a plane perpendicular to the flow direction. Sixteen (16) sampling points were used for USEPA Methods 2, 3, and 4 sampling, in accordance with USEPA Method 1 requirements. Three (3) traverse points located at 16.7%, 50%, and 83.3% were used for EPA Methods 10 and 25A sampling.

The (SCUF) MTF 2.7 exhaust stack has a circular cross section with an internal diameter of approximately 33.0 inches. The sampling location is located 3.0 equivalent diameters downstream from the nearest upstream flow disturbance and 2.2 equivalent diameters upstream from the stack exhaust. Two (2) sampling ports oriented 90 degrees to one another in a plane perpendicular to the flow direction. Sixteen, (16), sampling points were used for USEPA Methods 2, 3, and 4 sampling, in accordance with USEPA Method 1 requirements. Three (3) traverse points located at 16.7%, 50%, and 83.3% were used for EPA Methods 10 and 25A sampling.

The inlet gas flow metering system conducted via Method 2A was located at least 8 duct diameters downstream from the fuel contents sampling location during each test set.

3.0 SUMMARY AND DISCUSSION OF TEST RESULTS

3.1 OBJECTIVES

ABUTEC is seeking Manufacturers' Certification in accordance to 40 CFR Part 60 Subpart OOOO 60.5413(d) for two (2) models of Enclosed Gas Vapor Combustors including the *Small Combustion Utility Flare (SCUF) MTF 0.7* and *MTF 2.7*.

3.2 FIELD TEST CHANGES AND PROBLEMS

No significant problems were encountered during testing that required deviation from the planned test protocol. Items of note include the following:

1) Initially the inlet volumetric flow rate measurements were attempted to be conducted using a ROOTS Series B3 3M173 Meter via EPA Method 2A. However, because the facility was utilizing the inlet volumetric flow rate measurements to determine the various operating conditions and thus generate the required system fluctuations, this system was found to not be efficient in determining this information. Therefore, prior to beginning the testing, ABUTEC removed the Vane meter from the selected sample location and installed a thermal mass flow measuring system (Model Proline t-mass, 65F, 65I) which provided real-time, instantaneous flow rate measurements. This unit also measured the inlet fuel delivery line pressure and temperature.
2) The moisture content of the inlet gas fuel samples was not able to be conducted by the analytical laboratory. This information was also not able to be measured in the field due to the limited access and gas stream characteristics of the inlet fuel delivery sample line and locations.

3.3 PRESENTATION OF TEST RESULTS

Emission test results are presented in Appendix A. Reduced and tabulated data from the field-testing is included in Appendix B. The calculations and nomenclature used to reduce the data are presented in Appendix C. Actual raw field data sheets are presented in Appendix D. Laboratory reports and custody records are presented in Appendix E

Equipment calibration information and gas calibration certification sheets are presented in Appendix F. . Process operation data information is presented in Appendix G.

Performance criteria of the control devices (Enclosed Combustors) were assessed as follows:

1) No visible emissions were observed throughout the test periods. Method 22 data sheets are presented and required digital photographs of the exhaust stacks are presented in Appendix D.

2) THC as propane corrected to 3.0 percent CO_2 did not exceed 10.0 ppmvw. Results are presented in Appendix A.

3) CO emissions corrected to 3.0 percent CO_2 did not exceed 10.0 ppmvd. Results are presented in Appendix A.

(4) It was determined that the maximum inlet gas flow rate measured for each unit did not result in emissions of VE, THC, or CO which exceeded the applicable criteria listed above. Results are presented in Appendix A.

(6) The control device HAP destruction efficiency (DRE) requirement (>95.0%) listed in 63 Subpart HH was determined, through communication with the previously referenced EPA contact, to not be applicable to these units and thus was not specifically assessed during this test event and therefore the unit exhaust samples were not requested to be analyzed for HAP contents. Additionally, as indicated by the EPA contact, it is expected that a unit which successfully demonstrates the ability to combust propylene and meet the emissions criteria listed in the rule, will be able to combust >95% of any HAPs or other organic compounds it encounters in field usage with the assumption that no liquid is fed to the burners.

(7) The control device VOC destruction efficiency (DRE) requirement listed in 60 Subpart OOOO is also greater than 95.0%. The inlet 'VOC' mass rates were determined via the inlet fuel sample contents' analysis and fuel flow rate. The exhaust VOC emissions were determined via Method 25A and measured as total hydrocarbons. As expected, the inlet fuel samples contained greater than 99.99% of hydrocarbons (C2-C6+). The resulting DRE was determined to be greater than 99.99% for both units tested.

Additionally, this test report includes the following information:

(i) Full schematic of the control device and dimensions of the device components.

SEE Appendix G.

(ii) Design net heating value (minimum and maximum) of the devices ranged from 220-3500 BTU/FT^3.

(iii) Test fuel gas flow range (in both mass and volume). Include the minimum and maximum allowable inlet gas flowrate. See Appendix A.

(iv) Air/stream injection/assist ranges are not applicable to these units.

(v) The test parameter ranges listed in paragraphs (A) through (O), as applicable for the tested model.

(A) Fuel gas delivery pressure and temperature. – see Appendix D
(B) Fuel gas moisture range. – See note in Section 3.2
(C) Purge gas usage range. – PURGE GAS NOT USED
(D) Condensate (liquid fuel) separation range. – NO LIQUIDS IN THE GAS
(E) Combustion zone temperature range was found to be 1400-2100 deg F.
(F) Excess combustion air range. – see Appendix A
(G) Flame arrestor(s). – see Appendix G - Components List
(H) Burner manifold pressure ranged from 2 to 4 oz/ in^2.
(I) Pilot flame sensor. – Type K thermocouple; see Components List in Appendix G.
(J) Pilot flame design fuel and fuel usage - Optional 50kW Coander Anti-Flashback Pilot Burner; Pilot not used during testing.
(K) Tip velocity range.– for 0.7 unit = 23.75ft/sec; for 2.7 unit = 36.7 ft/sec; both at full flow / max capacity
(L) Momentum flux ratio. –see Appendix G
(M) Exit temperature range. – see Appendix B, D
(N) Exit flowrate. – see Appendix A
(O) Wind velocity and direction. – see Appendix D

TABLE 3-1: Results Summary

Source	Condition #	Pollutant / Parameter	Average Measured	Allowable	Units	% of Allowable
Flare 2.7 Outlet	1 - 90-100%	CO	2.71	10	ppm_D @ 3% CO_2	**27%**
		THC (as propane)	0.2	10	ppm_w @ 3% CO_2	**2%**
	2 - 70-100%	CO	2.75	10	ppm_D @ 3% CO_2	**27%**
		THC (as propane)	0.2	10	ppm_w @ 3% CO_2	**2%**
	2 - 70-100%	CO	1.08	10	ppm_D @ 3% CO_2	**11%**
		THC (as propane)	0.2	10	ppm_w @ 3% CO_2	**2%**
	4 - 0-30%	CO	0.67	10	ppm_D @ 3% CO_2	**7%**
		THC (as propane)	0.1	10	ppm_w @ 3% CO_2	**1%**
Flare 0.7 Outlet	1 - 90-100%	CO	4.14	10	ppm_D @ 3% CO_2	**41%**
		THC (as propane)	0.3	10	ppm_w @ 3% CO_2	**3%**
	2 - 70-100%	CO	2.96	10	ppm_D @ 3% CO_2	**30%**
		THC (as propane)	0.3	10	ppm_w @ 3% CO_2	**3%**
	3 - 30-70%	CO	2.60	10	ppm_D @ 3% CO_2	**26%**
		THC (as propane)	0.6	10	ppm_w @ 3% CO_2	**6%**
	4 - 0-30%	CO	0.89	10	ppm_D @ 3% CO_2	**9%**
		THC (as propane)	0.4	10	ppm_w @ 3% CO_2	**4%**

TABLE 3-2: THC Destruction & Removal Efficiency Summary

Source	Condition	Measured (Inlet)	Average Measured (Outlet)	Units	Destruction & Removal Efficiency (%)
Flare 0.7	1	76.7	0.00157	kg/hr	**99.998%**
	2	67.4	0.00207		**99.997%**
	3	48.9	0.00213		**99.996%**
	4	41.0	0.000548		**99.999%**
Flare 2.7	1	279.0	0.00591	kg/hr	**99.998%**
	2	257.57	0.00520		**99.998%**
	3	175.00	0.00587		**99.997%**
	4	93.98	0.00161		**99.998%**

Notes:

Inlet THC measured as C2-C6 on a dry mole percent basis; Outlet THC measured via Method 25A on a carbon converted to 'as propane' basis.

COMM OOOO Combustor 100

The COMM OOOO Combustor 100 is an effective emissions control device that has been designed to meet both federal and state requirements. The COMM Combustor is an enclosed combustion system in an insulated stack that can achieve >99% destruction efficiency.

Base Design

- 2.5 MMBTU/HR
- No Visible Flame
- No Electricity Required
- Smokeless Combustion
- Stainless Steel Burner
- Connections for Pilot Fuel and Waste Gas
- Dual Layer Insulation
- Sample Ports
- Built in Liquid Knock Out Vessel
- Inlet Air Flame Arrestor
- Bird Screen

Options

- Control Panel w/ Temperature Display and Modbus
- Electric Pilot w/ Auto Re-Ignition and Flame Ionization
- Solenoid Valves for Emergency Shutdown of Fuel Lines
- Manual Air Damper
- Temperature Probe
- Inline Deflagration Arrestor
- Solar Panel and Battery Package
- Thermal Mass Flow Meter

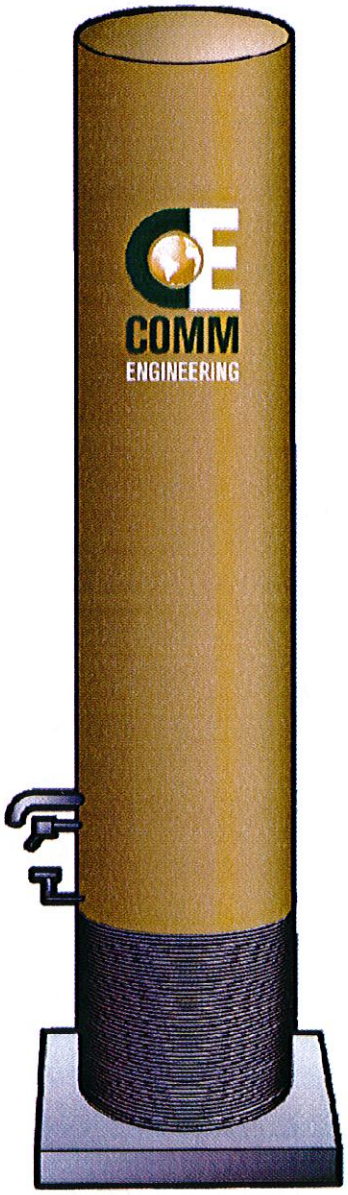

SPECIFICATIONS	
Dimensions	36" diameter x 15' long
Volume	Up to 100 MSCFD (2.5 MMBTU/HR)
Waste Gas Pressure	> ½ oz/sq in
Pilot Gas	Natural gas, propane
Air Requirements	Natural draft

1319 West Pinhook Road
Lafayette, LA 70503
(337)-237-4373
www.commengineering.com

ATTACHMENT N

Supporting Calculations

Traid Hunter, LLC

Spencer Well Pad Station
Tyler County

Source	Description	NOx lb/hr	CO lb/hr	CO2e lb/hr	VOC lb/hr	SO2 lb/hr	H2S lb/hr	PM lb/hr	benzene lb/hr	formaldehyde lb/hr	Total HAPs lb/hr
1S	Compressor Engine #1	1.52	4.41	1765.5	1.22	0.006	0.00	0.103	0.000	0.748	0.893
2S	Compressor Engine #2 **(Removed)**	0.00	0.00	0.0	0.00	0.000	0.00	0.000	0.000	0.000	0.000
9S	Compressor Engine #3 **(NEW)**	2.78	1.42	952.6	0.25	0.003	0.00	0.054	0.000	0.194	0.273
7S	Flash Gas (VRU) Compressor **(Removed)**	0.00	0.00	0.0	0.00	0.000	0.00	0.000	0.000	0.000	0.000
4S	Dehy Reboiler Vent	0.04	0.03	46.2	0.53	0.000	0.00	0.003	0.026		1.014
6S	Gas Processing Units	0.39	0.33	473.4	0.02	0.002	0.00	0.030		0.000	0.000
8S	Gas Processing Units	0.39	0.33	473.4	0.02	0.002	0.00	0.030		0.000	0.000
---	Blowdowns[1]			8225.0	88.80						
EC-1	EC-1 Flare Pilot + Waste Gas Combustion (including water and condensate tank vapors)[2]	0.17	0.90	289.1	2.54	0.000	0.00	0.008	0.000	0.000	0.002
EC-2	EC-2 Flare Pilot + Waste Gas Combustion	0.59	3.19	1067.8	3.11	0.000	0.00	0.042	0.000	0.000	0.010
TL-1	Un-Captured Condensate Truck Loading			26.0	12.13						
TL-2	Un-Captured Water Truck Loading				0.28						
	Haul Road Fugitive Dust							13.160			
---	Fugitive			19.0	0.38						0.002
Total		5.88	10.61	13,338	109.28	0.01	0.00	13.43	0.03	0.94	2.20

Source		NOx tpy	CO tpy	CO2e tpy	VOC tpy	SO2 tpy	H2S tpy	PM tpy	benzene tpy	formaldehyde tpy	Total HAPs tpy
1S	Compressor Engine #1	6.66	19.32	7,733	5.33	0.027	0.00	0.45	0.00	3.28	3.91
2S	Compressor Engine #2 **(Removed)**	0.00	0.00	0	0.00	0.000	0.00	0.00	0.00	0.00	0.00
9S	Compressor Engine #3 **(NEW)**	12.17	6.21	4,172	1.10	0.014	0.00	0.24	0.00	0.85	1.20
7S	Flash Gas (VRU) Compressor **(Removed)**	0.00	0.00	0	0.00	0.000	0.00	0.00	0.00	0.00	0.00
4S	Dehy Reboiler Vent	0.17	0.14	202	2.31	0.000	0.00	0.01	0.11		1.01
6S	Gas Processing Units	1.72	1.44	2,073	0.09	0.010	0.00	0.13		0.00	0.00
8S	Gas Processing Units	1.72	1.44	2,073	0.09	0.010	0.00	0.13		0.00	0.00
---	Blowdowns[1]			248	2.66						
EC-1	EC-1 Flare Pilot + Waste Gas Combustion (including water and condensate tank vapors)[2]	0.58	3.04	986	6.31	0.000	0.00	0.03	0.00	0.00	0.01
EC-2	EC-2 Flare Pilot + Waste Gas Combustion	1.57	8.48	2,984	13.62	0.000	0.00	0.11	0.00	0.00	0.03
TL-1	Un-Captured Condensate Truck Loading			1	2.19						
TL-2	Un-Captured Water Truck Loading				0.61						
	Haul Road Fugitive Dust							18.50			
---	Fugitive			83.17	1.65						0.01
Total		24.58	40.07	20,557	35.97	0.06	0.00	19.60	0.12	4.13	6.17
	Current Permit	23.72	48.83	23,946	51.19	0.10	0.00	1.53	0.07	6.81	8.72
	Increase/Decrease	**0.85**	**-8.76**	**-3389.14**	**-15.22**	**-0.03**	**0.00**	**18.07**	**0.05**	**-2.67**	**-2.55**

[1] See Appendix C for Blowdown Calculations
[2] Condensate and water tanks equipped with Combustor
Combined capture and control effiency of system for controlleding water and condensate tanks is 98%
All emissions from this capture and control system are presented in this line. VOC emissions are approximately an equal mix of un-captured/un-controlled emissions from the tanks and piping and incomplete combustion.

Triad Hunter, LLC
ENGINE EMISSIONS

Spencer Well Pad Station
Tyler County

Proposed Emission Rates

Source 1S

Engine Data:

Engine Manufacturer	CAT	
Engine Model	3516B	
Type (Rich-burn or Low Emission)	Low Emissions	
Aspiration (Natural or Turbocharged)	Natural	
Turbocharge Cooler Temperature	130	deg. F
Manufacturer Rating	1,380	hp
Speed at Above Rating	1,400	rpm
Configeration (In-line or Vee)	V-16	
Number of Cylinders	16	
Engine Bore	6.700	inches
Engine Stroke	7.500	inches
Fuel Heat Content	1,205	BTU/scf
Engine Displacement	4,231	cu. in.
Fuel Consumption	7,500	Btu/bhp-hr

Emission Rates:	g/bhp-hr	lb/hr	tons/year	g/hr	lb/day	AP-42 4strokelean lb/mmbtu	Comment
Oxides of Nitrogen, NOx	0.50	1.52	6.66	690	36.51		
Carbon Monoxide CO	1.45	4.41	19.32	2,001	105.87		453.59 grams = 1 pound
VOC (NMNEHC)	0.40	1.22	5.33	552	29.21		2,000 pounds = 1 ton
CO2e		1766	7733.01				
CO2	474	1442	6316.35	654,120	34610.13		
Total Annual Hours of Operation	**8,760**						
SO2		0.0062	0.0272			0.0006	
PM2.5		0.0008	0.0035			7.71E-05	
PM (Condensable)		0.1026	0.4493			0.00991	
Methane		12.938	56.666			1.25	
acrolein		0.0532	0.2330			0.00514	
acetaldehyde		0.0865	0.3790			0.00836	
formaldehyde	0.2460	0.7484	3.2780			0.0528	**Mfg. Spec Used**
biphenyl		0.0002	0.0009			0.000212	
benzene		0.0004	0.0019			0.00044	
toluene		0.0004	0.0017			0.000408	
ethylbenzene		4E-05	0.0002			3.97E-05	
xylene		0.0002	0.0008			0.000184	
methanol		0.0024	0.0107			0.0025	
n-hexane		0.0011	0.0047			0.00111	
total HAPs		0.8929	3.9109			0.071194	

Exhaust Parameters:

Exhaust Gas Temperature	992	deg. F
Exhaust Gas Flow Rate	9216	acfm
Total Exhaust Gas Volume Flow, wet	9,216	acfm
Total Exhaust Gas Volume Flow, wet	153.6	acf per sec
Exhaust Stack Height	260	inches
	21.67	feet
Exhaust Stack Inside Diameter	20	inches
	1.667	feet
Exhaust Stack Velocity	70.4	ft/sec
	4,224.3	ft/min

$$\frac{4 \times acfm}{3.1416 \times (\text{stack diameter})^2}$$

Triad Hunter ,LLC
ENGINE EMISSIONS

Spencer Well Pad Station
Tyler County

Proposed Emission Rates

Source 2S (REMOVED)

Engine Data:

Engine Manufacturer	CAT	
Engine Model	3516B	
Type (Rich-burn or Low Emission)	Low Emissions	
Aspiration (Natural or Turbocharged)	Natural	
Turbocharge Cooler Temperature	130	deg. F
Manufacturer Rating	1,380	hp
Speed at Above Rating	1,400	rpm
Configeration (In-line or Vee)	V-16	
Number of Cylinders	16	
Engine Bore	6.693	inches
Engine Stroke	7.491	inches
Fuel Heat Content	1,205	BTU/scf
Engine Displacement	4,217	cu. in.
Fuel Consumption	7,500	Btu/bhp-hr

Emission Rates:	g/bhp-hr	lb/hr	tons/year	g/hr	lb/day	AP-42 4strokelean lb/mmbtu	Comment
Oxides of Nitrogen, NOx	0.50	1.52	6.66	690	36.51		
Carbon Monoxide CO	1.45	4.41	19.32	2,001	105.87		
VOC (NMNEHC)	0.40	1.22	5.33	552	29.21		
CO2e		1766	7733.01				
CO2	474	1442	6316.35	654,120	34610.13		
Total Annual Hours of Operation	**8,760**						
SO2		0.0062	0.0272			0.0006	
PM2.5		0.0008	0.0035			7.71E-05	
PM (Condensable)		0.1026	0.4493			0.00991	
Methane		12.938	56.666			1.25	
acrolein		0.0532	0.2330			0.00514	
acetaldehyde		0.0865	0.3790			0.00836	
formaldehyde	0.2460	0.7484	3.2780			0.0528	Catalyst Spec Used.
biphenyl		0.0002	0.0009			0.000212	
benzene		0.0004	0.0019			0.00044	
toluene		0.0004	0.0017			0.000408	
ethylbenzene		4E-05	0.0002			3.97E-05	
xylene		0.0002	0.0008			0.000184	
methanol		0.0024	0.0107			0.0025	
n-hexane		0.0011	0.0047			0.00111	
total HAPs		0.8929	3.9109			0.071194	

Comment		
453.59	grams	= 1 pound
2,000	pounds	= 1 ton

Exhaust Parameters:

Exhaust Gas Temperature	1,089	deg. F
Exhaust Gas Flow Rate	9216	acfm
Total Exhaust Gas Volume Flow, wet	9,216	acfm
Total Exhaust Gas Volume Flow, wet	153.6	acf per sec
Exhaust Stack Height	260	inches
	21.67	feet
Exhaust Stack Inside Diameter	20	inches
	1.667	feet
Exhaust Stack Velocity	70.4	ft/sec
	4,224.3	ft/min

$$\frac{4 \times acfm}{3.1416 \times (\text{stack diameter})^2}$$

Triad Hunter ,LLC
ENGINE EMISSIONS

Spencer Well Pad Station
Tyler County

Proposed Emission Rates

Source 9S (NEW)

Engine Data:

Engine Manufacturer	CAT	
Engine Model	3508B	
Type (Rich-burn or Low Emission)	Low Emissions	
Aspiration (Natural or Turbocharged)	Natural	
Turbocharge Cooler Temperature	130	deg. F
Manufacturer Rating	630	hp
Speed at Above Rating	1,400	rpm
Configeration (In-line or Vee)	V-8	
Number of Cylinders	8	
Engine Bore	6.693	inches
Engine Stroke	7.491	inches
Fuel Heat Content	1,205	BTU/scf
Engine Displacement	2,108	cu. in.
Fuel Consumption	8,627	Btu/bhp-hr

Emission Rates:	g/bhp-hr	lb/hr	tons/year	g/hr	lb/day	AP-42 4strokelean lb/mmbtu	Comment
Oxides of Nitrogen, NOx	2.00	2.78	12.17	1,260	66.67		
Carbon Monoxide CO	1.02	1.42	6.21	643	34.00		453.59 grams = 1 pound
VOC (NMNEHC)	0.18	0.25	1.10	113	6.00		2,000 pounds = 1 ton
CO2e		953	4172.34				
CO2	544	756	3309.39	342,720	18133.65		

Total Annual Hours of Operation	**8,760**				
SO2		0.0033	0.0143	0.0006	Manufacturer Spec
PM2.5 + Condensables		0.0543	0.2378	0.00999	Manufacturer Spec
Methane		7.8808	34.518	1.45	Manufacturer Spec
acrolein		0.0279	0.1224	0.00514	
acetaldehyde		0.0454	0.1990	0.00836	
formaldehyde	0.1400	0.1944	0.8517	0.0528	Catalyst Spec Used.
biphenyl		0.0002	0.0010	0.000212	
benzene		0.0005	0.0022	0.00044	
toluene		0.0005	0.0020	0.000408	
ethylbenzene		4E-05	0.0002	3.97E-05	
xylene		0.0002	0.0009	0.000184	
methanol		0.0028	0.0123	0.0025	
n-hexane		0.0012	0.0055	0.00111	
total HAPs		0.2733	1.1971	0.071194	

Exhaust Parameters:

Exhaust Gas Temperature	850	deg. F
Exhaust Gas Flow Rate	3478	acfm
Total Exhaust Gas Volume Flow, wet	3,478	acfm
Total Exhaust Gas Volume Flow, wet	58.0	acf per sec
Exhaust Stack Height	192	inches
	16.00	feet
Exhaust Stack Inside Diameter	20	inches
	1.667	feet
Exhaust Stack Velocity	26.6	ft/sec
	1,594.2	ft/min

$$\frac{4 \times acfm}{3.1416 \times (\text{stack diameter})^2}$$

Triad Hunter,LLC
ENGINE EMISSIONS

Spencer Well Pad Station
Tyler County

Proposed Emission Rates

Source 7S
Removed Flash Gas Compressor (VRU)

Engine Data:

Engine Manufacturer	CAT	
Engine Model	3306 TA	
Type (Rich-burn or Low Emission)	Rich Burn	
Aspiration (Natural or Turbocharged)	Natural	
Turbocharge Cooler Temperature	130	deg. F
Manufacturer Rating	203	hp
Speed at Above Rating	1,800	rpm
Configeration (In-line or Vee)	In line	
Number of Cylinders	6	
Engine Bore	4.764	inches
Engine Stroke	5.984	inches
Fuel Heat Content (HHV)	1,327	BTU/scf
Engine Displacement	640	cu. in.
Fuel Consumption	8,098	Btu/bhp-hr (HHV)

Emission Rates:	g/bhp-hr	lb/hr	tons/year	g/hr	lb/day	AP-42 4strokerich lb/mmbtu	Comment
Oxides of Nitrogen, NOx	2.00	0.90	3.92	406	21.48		
Carbon Monoxide CO	2.00	0.90	3.92	406	21.48		453.59 grams = 1 pound
VOC (NMNEHC)	0.06	0.03	0.12	12	0.64		2,000 pounds = 1 ton
CO2e		238	1044				
CO2	511	229	1002	103,733	5488.62		

Total Annual Hours of Operation	**8,760**				
SO2		0.001	0.0043	0.0006	
PM2.5 AP-42 0.0000771 lb/mmbtu		0.0156	0.0684	0.0095	
PM		0.0163	0.0714	0.00991	
Methane	1.02	0.4565	1.9994	1.25	Mfg. Spec Used
acrolein		0.0043	0.0189	0.00263	
acetaldehyde		0.0046	0.0201	0.00279	
formaldehyde mfr control rate	0.1250	0.0559	0.2450	0.0205	Per Catalyst Warranty
benzene		0.0026	0.0114	0.00158	
toluene		0.0009	0.0040	0.00056	
methanol		0.005	0.0220	0.00306	
xylene		0.0003	0.0014	0.00019	
total HAPs		0.0737	0.3229	0.03131	

Exhaust Parameters:

Exhaust Gas Temperature	1,064	deg. F
Exhaust Gas Flow Rate	970	acfm
Total Exhaust Gas Volume Flow, wet	970	acfm
Total Exhaust Gas Volume Flow, wet	16.2	acf per sec
Exhaust Stack Height	72	inches
	6.00	feet
Exhaust Stack Inside Diameter	6	inches
	0.500	feet
Exhaust Stack Velocity	82.3	ft/sec
	4,940.2	ft/min

$$\frac{4 \times \text{acfm}}{3.1416 \times (\text{stack diameter})^2}$$

DEHYDRATOR EMISSIONS

Spencer Well Pad Station
Tyler County

Burner/Still Vent Emissions
Source 4S

Reboiler Burner

Burner Duty Rating	500.0	Mbtu/hr		
Burner Efficiency	98.0	%		
Gas Heat Content (HHV)	1326.6	Btu/scf		
Total Gas Consumption	9230.1	scfd	3.37 MMscf/yr	lb/MMscf
H2S Concentration	0.000	Mole %		

NOx	0.0385	lbs/hr	0.168	TPY
CO	0.0323	lbs/hr	0.141	TPY
CO2e	46	lb/hr	202.312	TPY
VOC	0.0021	lbs/hr	0.009	TPY
SO2	0.0000	lbs/hr	0.000	TPY
PM	0.0029	lbs/hr	0.013	TPY
H2S	6.351E-05	lbs/hr	0.0002782	TPY

Controlled Still Vent Emissions

From ProMax
Dehy Stream 8

Dry Gas Rate	40,000	MCFD
Glycol Circulation Rate	3.0	Gal/lb H2O
Treating Temperature	120	Deg F
Treating Pressure	800	psi

Total HC	0.5934	lbs/hr	2.599	TPY
Total VOC	0.5246	lbs/hr	2.298	TPY
Total HAP	0.2315	lbs/hr	1.014	TPY
benzene	0.0255	lbs/hr	0.112	TPY
toluene	0.0862	lbs/hr	0.378	TPY
ethyl benzene	0.0171	lbs/hr	0.075	TPY
xylene	0.0796	lbs/hr	0.348	TPY
n-hexane	0.0231	lbs/hr	0.101	TPY

Total Dehy Emissions (4S)

NOx	0.0385	lbs/hr	0.168	TPY
CO	0.0323	lbs/hr	0.141	TPY
CO2e	46.1899	lb/hr	202.3	TPY
VOC	0.5267	lbs/hr	2.307	TPY
SO2	0.0000	lbs/hr	0.000	TPY
PM	0.0029	lbs/hr	0.013	TPY

AP-42 Factors Used for Reboiler:

NOx	**100**	**Lbs/MMCF**	
CO	**84**	**Lbs/MMCF**	
VOC	**5.5**	**Lbs/MMCF**	
CO_2	**120,000**	**Lbs/MMCF**	**Global Warming Potential = 1**
CH_4	**2.3**	**Lbs/MMCF**	**Global Warming Potential = 25**
N_2O	**2.2**	**Lbs/MMCF**	**Global Warming Potential =298**
HCOI	**0.075**	**Lbs/MMCF**	

Spencer Well Pad Station
Tyler County, WV

Potential Emission Rates

Source 6S
GPU Heaters

Burner Duty Rating	4000.0	Mbtu/hr	Four Units at 1.0 MMbtu/Hr Each
Burner Efficiency	99.0	%	
Gas Heat Content (HHV) PM		Btu/scf	
Total Gas Consumption	1326.6	scfd	
H2S Concentration	0.000	Mole %	
Hours of Operation	**8760**		

NOx	0.3922	lbs/hr	1.718	TPY
CO	0.3294	lbs/hr	1.443	TPY
CO2	470.5882	lbs/hr	2061	TPY
VOC	0.0216	lbs/hr	0.094	TPY
PM10	0.0298	lbs/hr	0.131	TPY
SO2	0.0024	lbs/hr	0.010	TPY
CH4	0.0090	lbs/hr	0.040	TPY
N2O	0.0086	lbs/hr	0.038	TPY
CO2e	473	lbs/hr	2073	TPY
HCOH	0.0003	lbs/hr	0.001	TPY

AP-42 (table 1.4) Factors Used

NOx	**100**	**Lbs/MMCF**	
CO	**84**	**Lbs/MMCF**	
CO_2	**120,000**	**Lbs/MMCF**	**Global Warming Potential = 1**
VOC	**5.5**	**Lbs/MMCF**	
PM	**7.6**	**Lbs/MMCF**	**PM = PM10 = PM2.5**
PM10	**7.6**	**Lbs/MMCF**	
PM2.5	**7.6**	**Lbs/MMCF**	
SO2	**0.6**	**Lbs/MMCF**	
CH_4	**2.3**	**Lbs/MMCF**	**Global Warming Potential = 25**
N_2O	**2.2**	**Lbs/MMCF**	**Global Warming Potential =298**
HCOH	**0.075**	**Lbs/MMCF**	

Spencer Well Pad Station
Tyler County, WV

Potential Emission Rates

Source 8S
Collins GPU Heaters

Burner Duty Rating	4000.0	Mbtu/hr	Four Units at 1.0 MMbtu/Hr Each
Burner Efficiency	99.0	%	
Gas Heat Content (HHV)	1326.6	Btu/scf	
Total Gas Consumption	73,094.89	scfd	
H2S Concentration	0.000	Mole %	
Hours of Operation	**8760**		

NOx	0.3922	lbs/hr	1.718	TPY
CO	0.3294	lbs/hr	1.443	TPY
CO2	470.5882	lbs/hr	2061	TPY
VOC	0.0216	lbs/hr	0.094	TPY
PM10	0.0298	lbs/hr	0.131	TPY
SO2	0.0024	lbs/hr	0.010	TPY
CH4	0.0090	lbs/hr	0.040	TPY
N2O	0.0086	lbs/hr	0.038	TPY
CO2e	473	lbs/hr	2073	TPY
HCOH	0.0003	lbs/hr	0.001	TPY

AP-42 (table 1.4) Factors Used

NOx	**100**	**Lbs/MMCF**	
CO	**84**	**Lbs/MMCF**	
CO_2	**120,000**	**Lbs/MMCF**	**Global Warming Potential = 1**
VOC	**5.5**	**Lbs/MMCF**	
PM	**7.6**	**Lbs/MMCF**	**PM = PM10 = PM2.5**
PM10	**7.6**	**Lbs/MMCF**	
PM2.5	**7.6**	**Lbs/MMCF**	
SO2	**0.6**	**Lbs/MMCF**	
CH_4	**2.3**	**Lbs/MMCF**	**Global Warming Potential = 25**
N_2O	**2.2**	**Lbs/MMCF**	**Global Warming Potential =298**
HCOH	**0.075**	**Lbs/MMCF**	

Spencer Well Pad Station
Tyler County, WV

'otential Emission Rate

Enclosed Combustor Pilot

Burner Duty Rating	23.6	Mbtu/hr
Burner Efficiency	98.0	%
Gas Heat Content (HHV)	1326.6	Btu/scf
Total Gas Consumption	435.7	scfd
H2S Concentration	0.000	Mole %
Hours of Operation	8760	

NOx	0.0024	lbs/hr	0.010	TPY
CO	0.0020	lbs/hr	0.009	TPY
CO2	2.8	lbs/hr	12.4	TPY
CO2e	3	lbs/hr	12	TPY
VOC	0.0001	lbs/hr	0.001	TPY
SO2	0.0000	lbs/hr	0.000	TPY
H2S	0.0000	lbs/hr	0.000	TPY
PM10	0.0002	lbs/hr	0.001	TPY
CHOH	0.0000	lbs/hr	0.000	TPY
Benzene	0.0000	lbs/hr	0.000	TPY
N-Hezane	0.0000	lbs/hr	0.000	TPY
Toluene	0.0000	lbs/hr	0.000	TPY
Total HAPs	0.0000	lbs/hr	0.000	TPY

AP-42 Factors Used (Tables 1.4.1-1.4.3)

NOx	**100**	**Lbs/MMCF**	
CO	**84**	**Lbs/MMCF**	
CO_2	**120,000**	**Lbs/MMCF**	**Global Warming Potential = 1**
VOC	**5.5**	**Lbs/MMCF**	
PM	**7.6**	**Lbs/MMCF**	
SO_2	**0.6**	**Lbs/MMCF**	
CH_4	**2.3**	**Lbs/MMCF**	**Global Warming Potential = 25**
N_2O	**2.2**	**Lbs/MMCF**	**Global Warming Potential =298**
HCOH	**0.075**	**Lbs/MMCF**	
Benzene	**0.0021**	**Lbs/MMCF**	
n-Hexane	**1.8**	**Lbs/MMCF**	
Toluene	**0.0034**	**Lbs/MMCF**	

Spencer Well Pad Station
Tyler County, WV

Potential Emission Rates

Source EC-1

Enclosed Combustor #1

Destruction Efficiency	98.0	%		
Gas Heat Content (HHV)	2437.0	Btu/scf[1]		
Max Flow to T-E	23,730	scf/day	6.700	MMCF/Yr[2]
Max BTUs to Flare	2.410	MMBTU/Hr	16,328	MMBTU/Yr

NOx	0.16	lbs/hr	0.56	tpy
CO	0.89	lbs/hr	3.02	tpy
CO2	281.66	lbs/hr	954.28	tpy
CO2e	283.39	lb/hr	961.00	tpy
VOC	2.54	lb/hr	6.31	tpy
CH4	0.072	lbs/hr	0.24	tpy
N2O	0.0005	lbs/hr	0.0018	tpy
PM	0.0075	lb/hr	0.0255	tpy
Benzene	0.0000	lb/hr	0.0000	tpy
CHOH	0.0001	lb/hr	0.0003	tpy
n-Hexane	0.0018	lb/hr	0.0060	tpy
Toluene	0.0000	lb/hr	0.0000	tpy
Total HAP	0.0019	lb/hr	0.0063	tpy

[1]BTU content of gas is derived as shown in attached discussion of gas streams to combustor
[2] Annual flow assumes daily flow 365 days per year.
VOC emissons are 2% of VOC loading to the combustor.

Factors Used

AP-42 Table 13.5-1	**NOx**	**0.068**	**Lbs/MMBTU**
AP-42 Table 13.5-1	**CO**	**0.37**	**Lbs/MMBTU**
40 CFR 98 Table C-1	**CO2**	**116.89**	**Lbs/MMBTU**
40 CFR 98 Table C-2	**CH4**	**0.0022**	**Lbs/MMBTU**
40 CFR 98 Table C-2	**N2O**	**0.00022**	**Lbs/MMBTU**
AP-42 Table 1.4-2	**PM**	**7.6**	**lb/MMSCF**
AP-42 Table 1.4-3	**Benzene**	**0.0021**	**lb/MMSCF**
AP-42 Table 1.4-3	**Toluene**	**0.0034**	**lb/MMSCF**
AP-42 Table 1.4-3	**Hexane**	**1.8**	**lb/MMSCF**
AP-42 Table 1.4-3	**CHOH**	**0.075**	**lb/MMSCF**

Spencer Well Pad Station
Tyler County, WV

Potential Emission Rates

Source EC-2

Enclosed Combustor #2

Destruction Efficiency	98.0	%		
Gas Heat Content (HHV)	1562.0	Btu/scf[1]		
Max Flow to T-E	132,460	scf/day	29.3	MMCF/Yr[2]
Max BTUs to Flare	8.621	MMBTU/Hr	45,767	MMBTU/Yr

NOx	0.59	lbs/hr	1.56	tpy
CO	3.19	lbs/hr	8.47	tpy
CO2	1,007.70	lbs/hr	2,674.83	tpy
CO2e	1,064.97	lb/hr	2,971.33	tpy
VOC	3.11	lb/hr	13.62	tpy
CH4	2.6900	lbs/hr	11.7800	tpy
N2O	0.0019	lbs/hr	0.0050	tpy
PM	0.0419	lb/hr	0.1113	tpy
Benzene	0.0000	lb/hr	0.0000	tpy
CHOH	0.0004	lb/hr	0.0011	tpy
n-Hexane	0.0099	lb/hr	0.0264	tpy
Toluene	0.0000	lb/hr	0.0000	tpy
Total HAP	0.0104	lb/hr	0.0275	tpy

[1]BTU content of gas is derived as shown in attached discussion of gas streams to combustor
[2] Annual flow assumes daily flow 365 days per year.
VOC emissons are 2% of VOC loading to the combustor.

Factors Used

AP-42 Table 13.5-1	**NOx**	**0.068**	**Lbs/MMBTU**
AP-42 Table 13.5-1	**CO**	**0.37**	**Lbs/MMBTU**
40 CFR 98 Table C-1	**CO2**	**116.89**	**Lbs/MMBTU**
40 CFR 98 Table C-2	**CH4**	**0.0022**	**Lbs/MMBTU**
40 CFR 98 Table C-2	**N2O**	**0.00022**	**Lbs/MMBTU**
AP-42 Table 1.4-2	**PM**	**7.6**	**lb/MMSCF**
AP-42 Table 1.4-3	**Benzene**	**0.0021**	**lb/MMSCF**
AP-42 Table 1.4-3	**Toluene**	**0.0034**	**lb/MMSCF**
AP-42 Table 1.4-3	**Hexane**	**1.8**	**lb/MMSCF**
AP-42 Table 1.4-3	**CHOH**	**0.075**	**lb/MMSCF**

Triad Hunter,LLC

Spencer Well Pad Station
Tyler County

Fugitive VOC Emissions

Volatile Organic Compounds, NMNEHC from gas analysis:	23.80	weight percent
Methane from gas analysis:	53.73	weight percent
Total HAPs Estimated	0.080	weight percent
Total HAP from Condensate Analysis	10.656	weight percent
Carbon Dioxide from gas analysis:	0.357	weight percent
Gas Density	0.0613	lb/scf

Emission Source:	Number	Oil & Gas Production*		VOC %	VOC, lb/hr	VOC TPY	HAP, lb/Hr	HAP TPY	CO2 lb/Hr	CO2 TPY	CH4 lb/hr	CH4 TPY	CO2e
Valves:													
Gas/Vapor:	120	0.02700	scf/hr	23.8	0.047	0.207	0.0002	0.001	0.001	0.003	0.107	0.4678	11.697
Light Liquid:	4	0.05000	scf/hr	100.0	0.012	0.054	0.0013	0.006					0.000
Heavy Liquid (Oil):	-	0.00050	scf/hr	100.0	0.000	0.000							0.000
Low Bleed Pneumatic	12	1.39000	scf/hr	23.8	0.244	1.067	0.0008	0.004	0.550	2.408	0.550	2.4081	62.612
Relief Valves:	6	0.04000	scf/hr	23.8	0.004	0.015	0.0000	0.000	0.000	0.000	0.008	0.0346	0.866
Open-ended Lines, gas:		0.06100	sfc/hr	23.8	0.000	0.000	0.0000	0.000					0.000
Open-ended Lines, liquid:	-	0.05000	lb/hr	100.0	0.000	0.000							0.000
Pump Seals:													0.000
Gas:	-	0.00529	lb/hr	23.8	0.000	0.000			0.000	0.000	0.000	0.0000	0.000
Light Liquid:	-	0.02866	lb/hr	100.0	0.000	0.000							0.000
Heavy Liquid (Oil):	-	0.00133	lb/hr	100.0	0.000	0.000							0.000
Compressor Seals, Gas:	6	0.01940	lb/hr	23.8	0.028	0.121	0.0000	0.000	0.000	0.002	0.004	0.0168	0.422
Connectors:													0.000
Gas:	325	0.00300	scf/hr	23.8	0.014	0.062	0.0000	0.000	0.000	0.001	0.032	0.1408	3.520
Light Liquid:	36	0.00700	scf/hr	100.0	0.252	1.104	0.0000	0.000					0.000
Heavy Liquid (Oil):	-	0.00030	scf/hr	100.0	0.000	0.000							0.000
Flanges:													0.000
Gas:	80	0.00086	lb/hr	23.8	0.016	0.072	0.0000	0.000	0.000	0.001	0.037	0.1619	4.049
Light Liquid:	24	0.00300	scf/hr	100.0	0.004	0.019	0.0000	0.000					0.000
Heavy Liquid:		0.0009	scf/hr	100.0	0.000	0.000							0.000

Fugitive Calculations:

	lb/hr	t/y
VOC	**0.378**	**1.655**
HAP	**0.002**	**0.010**
CH4	**0.188**	**0.822**
CO2	**0.002**	**0.007**
CO2e	**18.988**	**83.17**

Notes: *Factors are from 40 CFR 98, Table W-1A (scf/hr), where available. Remaining are API (lb/hr)

Triad Hunter, LLC

Spencer Station
Tyler County

Fuel Gas Composition Information:

	Fuel Gas mole %	Fuel M.W. lb/lb-mole	Fuel S.G.	Fuel Wt. %	LHV, dry Btu/scf	HHV, dry Btu/scf	AFR vol/vol	VOC NM / NE	Z Factor	GPM
Nitrogen, N2	0.460	0.129	0.004	0.585			-		0.0046	
Carbon Dioxide, CO2	0.179	0.079	0.003	0.357			-		0.0018	
Hydrogen Sulfide, H2S	0.000	0.000	0.000	0.000	0.0	0.0	0.000		0.0000	
Helium, He	-	-	-	-			-		-	
Oxygen, O2	-	-	-	-			-		-	
Methane, CH4	73.829	11.844	0.409	53.731	671.4	745.7	7.036		0.7368	
Ethane, C2H6	15.777	4.744	0.164	21.522	255.4	279.2	2.632		0.1565	4.197
Propane	5.732	2.528	0.087	11.466	132.7	144.2	1.365	11.466	0.0563	1.571
Iso-Butane	0.679	0.395	0.014	1.790	20.4	22.1	0.210	1.790	0.0066	0.221
Normal Butane	1.691	0.983	0.034	4.459	50.9	55.2	0.524	4.459	0.0163	0.530
Iso Pentane	0.405	0.292	0.010	1.326	15.0	16.2	0.154	1.326	0.0041	0.147
Normal Pentane	0.504	0.364	0.013	1.650	18.7	20.2	0.192	1.650	0.0050	0.182
Hexane	0.421	0.363	0.013	1.646	18.5	20.0	0.191	1.646	0.0042	0.172
Heptane	0.323	0.324	0.011	1.468	16.5	17.8	0.169	1.468	0.0032	0.148
	100.000	22.044	0.761		1,199.4	1,320.5	12.473	23.805	0.9954	7.168

Gas Density (STP) = 0.06135

Ideal Gross (HHV)	1,320.5
Ideal Gross (sat'd)	1,298.3
GPM	-
Real Gross (HHV)	1,326.6
Real Net (LHV)	1,205.0

Triad Hunter, LLC

Spencer Station
Tyler County

Dehy Flash Gas Composition Information:

	Fuel Gas mole %	Fuel M.W. lb/lb-mole	Fuel S.G.	Fuel Wt. %	LHV, dry Btu/scf	HHV, dry Btu/scf	AFR vol/vol	VOC NM / NE	Z Factor	GPM
Nitrogen, N2	0.435	0.122	0.004	0.518			-		0.0043	
Carbon Dioxide, CO2	0.331	0.146	0.005	0.619			-		0.0033	
Hydrogen Sulfide, H2S	0.000	0.000	0.000	0.000	0.0	0.0	0.000		0.0000	
Water	0.193	0.035	0.001	0.148			-		0.0019	
Oxygen, O2	-	-	-	-			-		-	
Methane, CH4	68.900	11.054	0.382	46.966	626.6	695.9	6.566		0.6876	
Ethane, C2H6	17.500	5.262	0.182	22.359	283.3	309.7	2.919		0.1736	4.655
Propane	6.990	3.082	0.106	13.097	161.8	175.9	1.665	13.097	0.0687	1.916
Iso-Butane	0.875	0.509	0.018	2.161	26.3	28.5	0.271	2.161	0.0085	0.285
Normal Butane	2.350	1.366	0.047	5.804	70.8	76.7	0.728	5.804	0.0227	0.737
Iso Pentane	0.535	0.386	0.013	1.640	19.8	21.4	0.204	1.640	0.0054	0.195
Normal Pentane	0.711	0.513	0.018	2.180	26.4	28.5	0.271	2.180	0.0071	0.256
Hexane	0.862	0.743	0.026	3.156	38.0	41.0	0.390	3.156	0.0085	0.352
Heptane	0.318	0.319	0.011	1.354	16.2	17.5	0.167	1.354	0.0032	0.146
	100.000	23.536	0.813		1,269.0	1,395.0	13.181	29.391	0.9948	8.542

Ideal Gross (HHV)	1,395.0
Ideal Gross (sat'd)	1,371.4
GPM	-
Real Gross (HHV)	1,402.2
Real Net (LHV)	1,275.6

GAS DATA INFORMATION

Specific Graivity of Air, @ 29.92 in. Hg and 60 -F, 28.9625
One mole of gas occupies, @ 14.696 psia & 32 -F 359.2 cu ft. per lb-mole
One mole of gas occupies, @ 14.696 psia & 60 -F 379.64 cu ft. per lb-mole

Hydrogen Sulfide (H2S) conversion chart:

0 grains H2S/100 scf	=	0.00000	mole % H2S
		0.0	ppmv H2S
0 mole % H2S	=	0	grains H2S/100 scf
		0.0	ppmv H2S
0 ppmv H2S	=	0.000	grains H2S/100 scf
		0.00000	mole % H2S

Ideal Gas at 14.696 psia and 60°F

		MW lb/mol	Specific Gravity	Lb per Cu Ft	Cu Ft per Lb	LHV, dry Btu/scf	HHV, dry Btu/scf	LHV Btu/lb	HHV Btu/lb	cu ft of air / 1 cu ft of gas	Z factor
Nitrogen	N2	28.013	0.9672	0.0738	13.552	0	0	0	0	0	0.9997
Carbon Dioxide	CO2	44.010	1.5196	0.1159	8.626	0	0	0	0	0	0.9964
Hydrogen Sulfide	H2S	34.076	1.1766	0.0898	11.141	587	637	6,545	7,100	7.15	0.9846
Water	H2O	18.002	0.6216	0.0474	21.089						1.0006
Oxygen	O2	31.999	1.1048	0.0843	11.864	0	0	0	0	0	0.9992
Methane	CH4	16.043	0.5539	0.0423	23.664	909.4	1,010.0	21,520	23,879	9.53	0.9980
Ethane	C2H6	30.070	1.0382	0.0792	12.625	1,618.7	1,769.6	20,432	22,320	16.68	0.9919
Propane	C3H8	44.097	1.5226	0.1162	8.609	2,314.9	2,516.1	19,944	21,661	23.82	0.9825
Iso-Butane	C4H10	58.124	2.0069	0.1531	6.532	3,000.4	3,251.9	19,629	21,257	30.97	0.9711
Normal Butane	C4H10	58.124	2.0069	0.1531	6.532	3,010.8	3,262.3	19,680	21,308	30.97	0.9667
Iso Pentane	C5H12	72.151	2.4912	0.1901	5.262	3,699.0	4,000.9	19,478	21,052	38.11	1.0000
Normal Pentane	C5H12	72.151	2.4912	0.1901	5.262	3,706.9	4,008.9	19,517	21,091	38.11	1.0000
Hexane	C6H14	86.178	2.9755	0.2270	4.405	4,403.8	4,755.9	19,403	20,940	45.26	0.9879
Heptane	C7H16	100.205	3.4598	0.2639	3.789	5,100.0	5,502.5	22,000	23,000	52.41	0.9947

Real Gas at 14.696 psia and 60°F

		MW lb/mol	Specific Gravity	Lb per Cu Ft	Cu Ft per Lb	LHV, dry Btu/scf	HHV, dry Btu/scf	LHV Btu/lb	HHV Btu/lb	cu ft of air / 1 cu ft of gas	Gal/Mole	
Nitrogen	N2	28.013	0.9672	0.0738	13.552	0	0	0	0	0	4.1513	
Carbon Dioxide	CO2	44.010	1.5196	0.1159	8.626	0	0	0	0	0	6.4532	
Hydrogen Sulfide	H2S	34.076	1.1766	0.0898	11.141	621	672	6,545	7,100	7.15	5.1005	
Helium	He	4.003	0.1382	0.0105	94.848						3.8376	
Oxygen	O2	31.999	1.1048	0.0843	11.864	0	0	0	0	0	3.3605	
Methane	CH4	16.043	0.5539	0.0423	23.664	911	1,012	21,520	23,879	9.53	6.4172	
Ethane	C2H6	30.070	1.0382	0.0792	12.625	1,631	1,783	20,432	22,320	16.68	10.126	
Propane	C3H8	44.097	1.5226	0.1162	8.609	2,353	3,354	19,944	21,661	23.82	10.433	
Iso-Butane	C4H10	58.124	2.0069	0.1531	6.532	3,101	3,369	19,629	21,257	30.97	12.386	
Normal Butane	C4H10	58.124	2.0069	0.1531	6.532	3,094	3,370	19,680	21,308	30.97	11.937	
Iso Pentane	C5H12	72.151	2.4912	0.1901	5.262	3,709	4,001	19,478	21,052	38.11	13.86	
Normal Pentane	C5H12	72.151	2.4912	0.1901	5.262	3,698	4,009	19,517	21,091	38.11	13.713	
Hexane	C6H14	86.178	2.9755	0.2270	4.405	4,404	4,756	19,403	20,940	45.26	15.566	16.3227
Heptane	C7H16	100.205	3.4598	0.2639	3.789	5,101	5,503	22,000	23,000	52.41	17.468	17.468

Attachment N
FUGITIVE EMISSIONS FROM UNPAVED HAULROADS

UNPAVED HAULROADS (including all equipment traffic involved in process, haul trucks, endloaders, etc.)

		PM	PM-10
k =	Particle size multiplier	0.80	0.36
s =	Silt content of road surface material (%)	10	3
p =	Number of days per year with precipitation >0.01 in.	157	157

Item Number	Description	Number of Wheels	Mean Vehicle Weight (tons)	Mean Vehicle Speed (mph)	Miles per Trip	Maximum Trips per Hour	Maximum Trips per Year	Control Device ID Number	Control Efficiency (%)
1	Produced Water Tanker Truck	10	27	10	1.04	1	6032	None	0
2	Condensate Tanker Truck	18	27	10	1.04	1	410	None	0
3									
4									
5									
6									
7									
8									

Source: *AP-42 Fifth Edition – 13.2.2 Unpaved Roads*

$E = k \times 5.9 \times (s \div 12) \times (S \div 30) \times (W \div 3)^{0.7} \times (w \div 4)^{0.5} \times ((365 - p) \div 365) =$ lb/Vehicle Mile Traveled (VMT)

Where:

		PM	PM-10
k =	Particle size multiplier	0.80	0.36
s =	Silt content of road surface material (%)	10	3
S =	Mean vehicle speed (mph)	10	10
W =	Mean vehicle weight (tons)	27	27
w =	Mean number of wheels per vehicle	14	14
p =	Number of days per year with precipitation >0.01 in.	157	157

For lb/hr: [lb ÷ VMT] × [VMT ÷ trip] × [Trips ÷ Hour] = lb/hr

For TPY: [lb ÷ VMT] × [VMT ÷ trip] × [Trips ÷ Hour] × [Ton ÷ 2000 lb] = Tons/year

SUMMARY OF UNPAVED HAULROAD EMISSIONS

Item No.	PM				PM-10			
	Uncontrolled		Controlled		Uncontrolled		Controlled	
	lb/hr	TPY	lb/hr	TPY	lb/hr	TPY	lb/hr	TPY
1	5.62	16.95	5.62	16.95	0.73	2.29	0.73	2.29
2	7.54	1.55	7.54	1.55	1.02	0.21	1.02	0.21
3								
4								
5								
6								
7								
8								
TOTALS	13.16	18.50	13.16	18.50	1.75	2.50	1.75	2.50

FUGITIVE EMISSIONS FROM PAVED HAULROADS

INDUSTRIAL PAVED HAULROADS (including all equipment traffic involved in process, haul trucks, endloaders, etc.)

I =	Industrial augmentation factor (dimensionless)	
n =	Number of traffic lanes	
s =	Surface material silt content (%)	
L =	Surface dust loading (lb/mile)	

Item Number	Description	Mean Vehicle Weight (tons)	Miles per Trip	Maximum Trips per Hour	Maximum Trips per Year	Control Device ID Number	Control Efficiency (%)
1	None						
2							
3							
4							
5							
6							
7							
8							

Source: *AP-42 Fifth Edition – 11.2.6 Industrial Paved Roads*

$E = 0.077 \times I \times (4 \div n) \times (s \div 10) \times (L \div 1000) \times (W \div 3)^{0.7} =$ lb/Vehicle Mile Traveled (VMT)

Where:

I =	Industrial augmentation factor (dimensionless)	
n =	Number of traffic lanes	
s =	Surface meterial silt content (%)	
L =	Surface dust loading (lb/mile)	
W =	Average vehicle weight (tons)	

For lb/hr: [lb ÷ VMT] × [VMT ÷ trip] × [Trips ÷ Hour] = lb/hr

For TPY: [lb ÷ VMT] × [VMT ÷ trip] × [Trips ÷ Hour] × [Ton ÷ 2000 lb] = Tons/year

SUMMARY OF PAVED HAULROAD EMISSIONS

Item No.	Uncontrolled		Controlled	
	lb/hr	TPY	lb/hr	TPY
1				
2				
3				
4				
5				
6				
7				
8				
TOTALS				

Certificate of Analysis

Number: 2030-13110103-002A

Carencro Laboratory
4790 NE Evangeline Thruway
Carencro, LA 70520

Alan Ball
Gas Analytical Services
PO Box 1028
Bridgeport, WV 26330

Nov. 17, 2013

Field: Triad Hunter LLC
Station Name: Spencer Combine
Sample Point:
Cylinder No: GAS
Analyzed: 11/16/2013 21:26:19 by GR

Sampled By: AW-GAS
Sample Of: Gas Spot
Sample Date: 11/05/2013
Sample Conditions: 1045 psig, @ 77 °F
Method: GPA 2286

Analytical Data

Components	Mol. %	Wt. %	GPM at 14.73 psia
Nitrogen	0.460	0.584	
Carbon Dioxide	0.179	0.357	
Methane	73.829	53.695	
Ethane	15.777	21.507	4.236
Propane	5.732	11.459	1.586
Iso-Butane	0.679	1.789	0.224
n-Butane	1.691	4.456	0.535
Iso-Pentane	0.405	1.325	0.148
n-Pentane	0.504	1.649	0.183
i-Hexanes	0.220	0.859	0.091
n-Hexane	0.177	0.696	0.074
Benzene	0.003	0.010	0.001
Cyclohexane	0.021	0.079	0.007
i-Heptanes	0.125	0.561	0.056
n-Heptane	0.059	0.274	0.028
Toluene	0.007	0.029	0.002
i-Octanes	0.087	0.421	0.039
n-Octane	0.015	0.076	0.008
Ethylbenzene	0.001	0.002	NIL
Xylenes	0.005	0.022	0.002
i-Nonanes	0.019	0.104	0.009
n-Nonane	0.003	0.016	0.002
Decane Plus	0.002	0.030	0.001
	100.000	100.000	7.232

GPM TOTAL C2+ 7.232

Physical Properties	Total	C10+
Calculated Molecular Weight	22.06	137.55
GPA 2172-09 Calculation:		
Calculated Gross BTU per ft³ @ 14.73 psia & 60°F		
Real Gas Dry BTU	1329.0	7211.5
Water Sat. Gas Base BTU	1305.9	7086.0
Relative Density Real Gas	0.7641	4.7546
Compressibility Factor	0.9959	

Patti L. Petro

Hydrocarbon Laboratory Manager

Quality Assurance: The above analyses are performed in accordance with ASTM, UOP, GPA guidelines for quality assurance, unless otherwise stated.

Certificate of Analysis

Number: 2030-13110103-002A

Carencro Laboratory
4790 NE Evangeline Thruway
Carencro, LA 70520

Alan Ball
Gas Analytical Services
PO Box 1028
Bridgeport, WV 26330

Nov. 17, 2013

Field:	Triad Hunter LLC	Sampled By:	AW-GAS
Station Name:	Spencer Combine	Sample Of:	Gas Spot
Sample Point:		Sample Date:	11/05/2013
Cylinder No:	GAS	Sample Conditions:	1045 psig, @ 77 °F
Analyzed:	11/16/2013 21:26:19 by GR	Method:	GPA 2286

Analytical Data

Components	Mol. %	Wt. %	GPM at 14.73 psia		
Nitrogen	0.460	0.584		GPM TOTAL C2+	7.232
Carbon Dioxide	0.179	0.357		GPM TOTAL C3+	2.996
Methane	73.829	53.695		GPM TOTAL iC5+	0.651
Ethane	15.777	21.507	4.236		
Propane	5.732	11.459	1.586		
Iso-butane	0.679	1.789	0.224		
n-Butane	1.691	4.456	0.535		
Iso-pentane	0.405	1.325	0.148		
n-Pentane	0.504	1.649	0.183		
Hexanes Plus	0.744	3.179	0.320		
	100.000	100.000	7.232		

Physical Properties	**Total**	**C6+**
Relative Density Real Gas	0.7641	3.2119
Calculated Molecular Weight	22.06	93.02
Compressibility Factor	0.9959	
GPA 2172-09 Calculation:		
Calculated Gross BTU per ft³ @ 14.73 psia & 60°F		
Real Gas Dry BTU	1329.0	5085.7
Water Sat. Gas Base BTU	1305.9	4997.2

Patti L. Perro

Hydrocarbon Laboratory Manager

Quality Assurance: The above analyses are performed in accordance with ASTM, UOP, GPA guidelines for quality assurance, unless otherwise stated.

Certificate of Analysis

Number: 2030-13110103-002A

Carencro Laboratory
4790 NE Evangeline Thruway
Carencro, LA 70520

Alan Ball
Gas Analytical Services
PO Box 1028
Bridgeport, WV 26330

Nov. 17, 2013

Field: Triad Hunter LLC
Station Name: Spencer Combine
Sample Point:
Cylinder No: GAS
Analyzed: 11/16/2013 21:26:19 by GR

Sampled By: AW-GAS
Sample Of: Gas Spot
Sample Date: 11/05/2013
Sample Conditions: 1045 psig, @ 77 °F
Method: GPA 2286

Analytical Data

Components	Mol. %	Wt. %	GPM at 14.73 psia		
Nitrogen	0.460	0.584		GPM TOTAL C2+	7.232
Carbon Dioxide	0.179	0.357		GPM TOTAL C3+	2.996
Methane	73.829	53.695		GPM TOTAL iC5+	0.651
Ethane	15.777	21.507	4.236		
Propane	5.732	11.459	1.586		
Iso-Butane	0.679	1.789	0.224		
n-Butane	1.691	4.456	0.535		
Iso-Pentane	0.405	1.325	0.148		
n-Pentane	0.504	1.649	0.183		
Hexanes	0.397	1.555	0.165		
Heptanes Plus	0.347	1.624	0.155		
	100.000	100.000	7.232		

Physical Properties	Total	C7+
Relative Density Real Gas	0.7641	3.5132
Calculated Molecular Weight	22.06	101.75
Compressibility Factor	0.9959	
GPA 2172-09 Calculation:		
Calculated Gross BTU per ft³ @ 14.73 psia & 60°F		
Real Gas Dry BTU	1329.0	5506.9
Water Sat. Gas Base BTU	1305.9	5411.0

Patti L. Perro

Hydrocarbon Laboratory Manager

Quality Assurance: The above analyses are performed in accordance with ASTM, UOP, GPA guidelines for quality assurance, unless otherwise stated.

Condensate Loading Lost Emission Factor Per AP-42

Per AP-42, Chapter 5.2.2.1.1, the uncontrolled loading loss emission factor L_L can be estimated as follows:

$$L_L = 12.46[SPM/T]$$

Where:

L_L = uncontrolled loading loss in pounds per 1000 gallons of liquid loaded
S= saturation factor (0.6)
P=true vapor pressure of liquid loaded 7.8 psia (AP-42 conversion of actual measurement of RVP of site condensate)
M= Molecular weight of vapor in lb/lb-mole (estimated at 43.8 – ProMax Stream 115)
T= temperature of bulk liquid loaded in deg R or 460+deg F (60 Deg F used)

Thus, L_L= 12.46[0.6 x 7.8 x 43.8]/[460+60]
L_L= 4.92 lb/1000 gallons loaded

Given a maximum loading of 8,474 gallons per hour, uncontrolled emissions are estimated at 41.7 lb of vapors per hour [8.474 x 4.92]. As shown in the ProMax Model for Streams 115 (condensate tank losses), the vapors from the tanks is approximately 97% VOCs. Thus, total VOC emissions from truck loading of condensate are 40.45 lb/hr. The control system [enclosed combustor] will reduce these emissions greater than 99%. However, non-certified trucks will now be utilized, allowing only a claim of 70% capture and control efficiency per AP-42, Chapter 5.2.2.1.1. Thus, un-captured VOC emissions are 12.13 lb/hr. All daily loading normally takes place within 1 hour.

Annual throughput is now anticipated to not exceed 3,066,000 gallons per year. Thus, un-captured VOC emissions are conservatively estimated at 4,390 pounds per year (3,066 x 4.92 x 30% x 97%) or 2.19 tons per year.

Greenhouse gas (methane) is conservatively estimated to be approximately 2.5% of the loading emissions. Thus, hourly and annual un-captured methane emissions are estimated at 1.04 lb/hr and 0.06 tpy. Using a GHG factor of 25, CO_{2e} emissions are estimated at 26 lb/hr and 1.4 tpy.

<u>Captured truck loading emissions are included in the combustor emission calculations.</u>

Total vapor loading to the combustor is 29.2 lb/hr [41.7 x 70%], again with all loading on a given day loading generally taking place during a one hour period. Maximum annual vapors to the combustor from truck loading will be 10,560 lb (3,066 x 4.92 x 70%) or 5.28 tons.

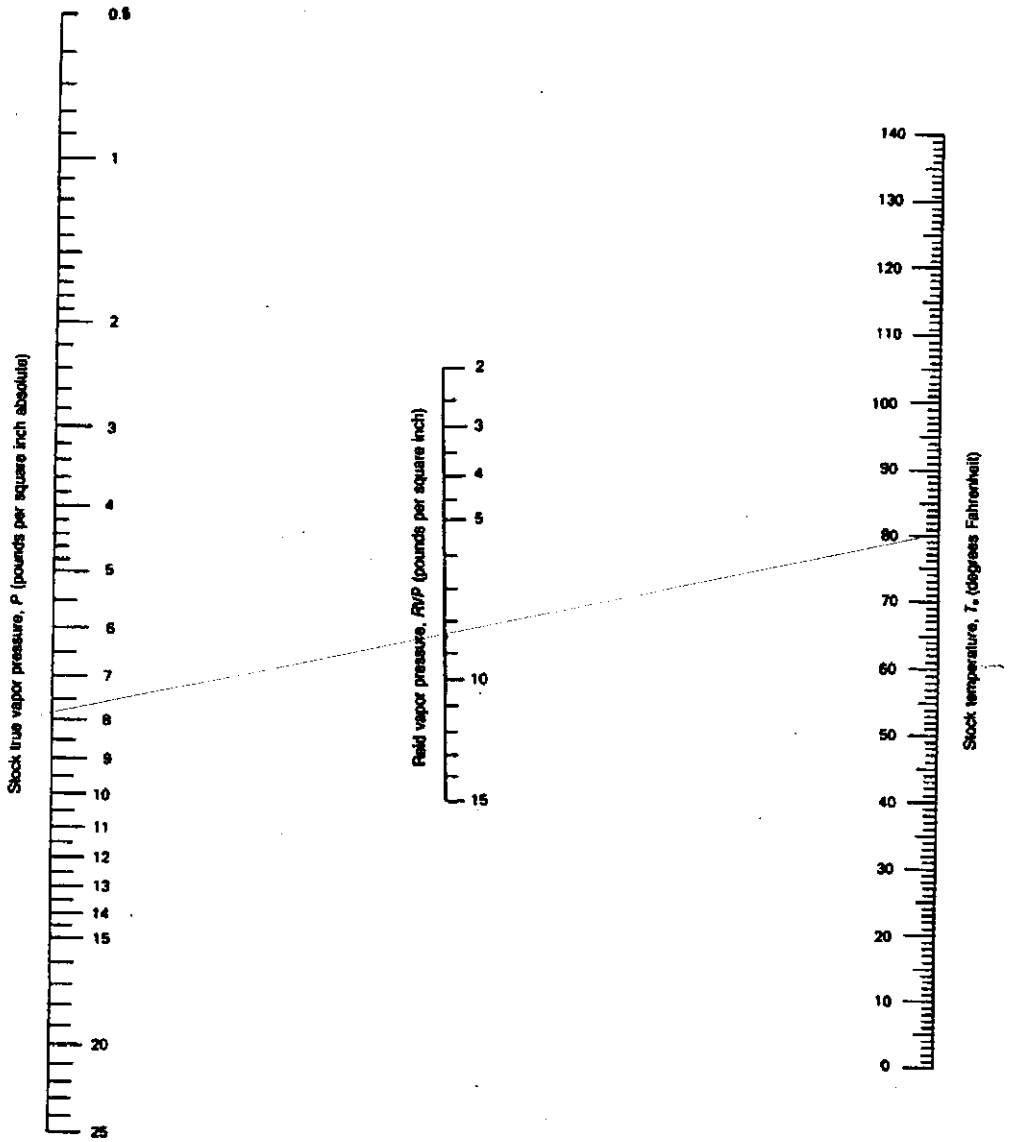

Figure 7.1-13a. True vapor pressure of crude oils with a Reid vapor pressure of 2 to 15 pounds per square inch.[4]

Water Truck Loading Lost Emissions Per AP-42

Per AP-42, Chapter 5.2.2.1.1, the uncontrolled loading loss emission factor L_L can be estimated as follows:

$$L_L = 12.46[SPM/T]$$

Where:

L_L = uncontrolled loading loss in pounds per 1000 gallons of liquid loaded
S= saturation factor (0.6)
P=true vapor pressure of liquid loaded (0.3 psia) Based on water at 60 Deg. F
M= Molecular weight of vapor in lb/lb-mole (37.74) From flash gas of comparable water sample
T= temperature of bulk liquid loaded in deg R or 460+deg F (60 Deg F)

Thus, $L_L = 12.46[0.6 \times 0.3 \times 37.74]/[460+60]$
$L_L = 0.16$ lb/1000 gallons loaded

Based on produced water flash gas from comparable wells, estimated that these emissions are 37.6% VOCs

Given a maximum water production of 1322 BBL (55,524 gallons) a day, uncontrolled emissions are estimated at 3.34 lb of VOC per day [55.524 x 0.16 x .376]. There is no control on the water truck loading operations. Therefore, uncaptured emissions are also estimated at 3.34 lb/day. As all daily loading will take place within a 12 hour period, the uncaptured hourly emission rate is conservatively estimated at 0.28 lb/hr [3.34 lb/2].

Maximum annual throughput is 482,500 BBL per year (20,266,260 gallons per year). Thus, uncaptured water loading emissions are estimated at 1219 pounds per year [20,266 x 0.16 x 0.376] or 0.61 tons per year.

July 28, 2014

FESCO, Ltd.
1100 Fesco Ave. - Alice, Texas 78332

For: SE Technologies, LLC
Building D, Second Floor
98 Vanadium Road
Bridgeville, Pennsylvania 15017-3061

Sample: [redacted]6H
Gas Liberated from Separator Water
From 197 psig & 65 °F to 0 psig & 70 °F

Date Sampled: 07/15/14 Job Number: 44304.001

CHROMATOGRAPH EXTENDED ANALYSIS - SUMMATION REPORT

COMPONENT	MOL%	GPM
Hydrogen Sulfide*	< 0.001	
Nitrogen	4.661	
Carbon Dioxide	0.993	
Methane	41.510	
Ethane	15.219	4.047
Propane	10.282	2.817
Isobutane	2.863	0.932
n-Butane	7.027	2.203
2-2 Dimethylpropane	0.000	0.000
Isopentane	3.722	1.353
n-Pentane	4.186	1.509
Hexanes	5.394	2.212
Heptanes Plus	4.143	1.817
Totals	100.000	16.890

Computed Real Characteristics Of Heptanes Plus:

Specific Gravity	3.535	(Air=1)
Molecular Weight	101.04	
Gross Heating Value	5356	BTU/CF

Computed Real Characteristics Of Total Sample:

Specific Gravity	1.321	(Air=1)
Compressibility (Z)	0.9868	
Molecular Weight	37.74	
Gross Heating Value		
Dry Basis	2086	BTU/CF
Saturated Basis	2051	BTU/CF

*Hydrogen Sulfide tested in laboratory by: Stain Tube Method (GPA 2377)
Results: <0.013 Gr/100 CF, <0.2 PPMV or <0.001 Mol %

Base Conditions: 14.650 PSI & 60 Deg F

Certified: FESCO, Ltd. - Alice, Texas

Analyst: MR
Processor: OA
Cylinder ID: WF-1S

David Dannhaus 361-661-7015

CHROMATOGRAPH EXTENDED ANALYSIS
TOTAL REPORT

COMPONENT	MOL %	GPM	WT %
Hydrogen Sulfide*	< 0.001		< 0.001
Nitrogen	4.661		3.460
Carbon Dioxide	0.993		1.158
Methane	41.510		17.646
Ethane	15.219	4.047	12.125
Propane	10.282	2.817	12.013
Isobutane	2.863	0.932	4.409
n-Butane	7.027	2.203	10.822
2,2 Dimethylpropane	0.000	0.000	0.000
Isopentane	3.722	1.353	7.115
n-Pentane	4.186	1.509	8.002
2,2 Dimethylbutane	0.205	0.085	0.468
Cyclopentane	0.369	0.153	0.686
2,3 Dimethylbutane	0.000	0.000	0.000
2 Methylpentane	1.592	0.657	3.635
3 Methylpentane	0.996	0.404	2.274
n-Hexane	2.232	0.913	5.096
Methylcyclopentane	0.174	0.060	0.388
Benzene	0.036	0.010	0.075
Cyclohexane	0.230	0.078	0.513
2-Methylhexane	0.548	0.253	1.455
3-Methylhexane	0.521	0.236	1.383
2,2,4 Trimethylpentane	0.000	0.000	0.000
Other C7's	0.533	0.231	1.401
n-Heptane	0.707	0.324	1.877
Methylcyclohexane	0.418	0.167	1.087
Toluene	0.057	0.019	0.139
Other C8's	0.553	0.256	1.615
n-Octane	0.163	0.083	0.493
Ethylbenzene	0.004	0.002	0.011
M & P Xylenes	0.020	0.008	0.056
O-Xylene	0.004	0.002	0.011
Other C9's	0.145	0.073	0.485
n-Nonane	0.030	0.017	0.102
Other C10's	0.000	0.000	0.000
n-Decane	0.000	0.000	0.000
Undecanes (11)	0.000	0.000	0.000
Totals	100.000	16.890	100.000

Computed Real Characteristics Of Total Sample:

Specific Gravity	1.321	(Air=1)
Compressibility (Z)	0.9868	
Molecular Weight	37.74	
Gross Heating Value		
Dry Basis	2086	BTU/CF
Saturated Basis	2051	BTU/CF

Triad Hunter
Spencer CS
Loading to Combustors

EC-1 Combustors

As noted in the Project Overview, residual flash gas released during the final drop in pressure on the condensate and produced water (from 60 psia to atmospheric) as it is routed to the atmospheric pressure storage tanks from the flash separator and subsequent working and breathing losses during storage of condensate in these tanks will be controlled by one or two enclosed combustors (COMM 100), depending upon the actual load. Under the revised operating conditions associated with this application, waste gas generated from the following operations within the Spencer CS will be routed to the EC-1 combustors:

- Flash Losses from the Condensate and Water Tanks
- Vapors from Condensate Truck Loading (indirectly via vapor balance back to the tanks
- Working and Breathing Vapors from the Condensate and Water Tanks

All waste gases are hard piped to the combustor. This hard pipe capture system is conservatively estimated at 99% effective. Additionally, the combustor is warranted by the manufacturer to have 99%+ destruction efficiency, resulting in an overall 98% reduction in VOC emissions from un-controlled emissions.

Loading to the combustor is a combination of ProMax Streams 8 (Condensate and Water Tank breathing losses), 111 (water tank flash gas) and 115 (condensate tank flash gas) plus the truck loading emissions. Together, these sources are summarized as follows:

Stream	Max Hourly Mass Loading (lb/Hr)	Max Annual Mass Loading (tpy)	Max Hourly Heat Loading (MMBTU/Hr)	Max Annual Heat Loading (MMBTU/yr)
ProMax Stream 8	10.58	46.34	0.21	1840
Promax Stream 111	0.91	3.98	0.02	175
Promax Stream 115	75.46	330.5	1.61	14,104
Truck Loading	29.2	5.28	0.57	208
TOTAL	116.15	386.1	2.41	16,327

VOC Emissions

VOC content of this combined vapor stream is approximately 77.3%. With a 98% capture and control efficiency of all VOCs going to the combustor, hourly VOC emissions are 1.80 lb/hr

[116.15 lb/Hr x 0.773 x 0.02] and 5.97 tpy [386.1 x 0.773 x 0.02]. This hourly and annual VOC emission rate has been entered into the preceding emissions spreadsheet.

GHG Emissions

As noted in the ProMax model, these various emissions have methane (a GHG) emissions as well as VOCs. Using the attached ProMax model, data, the maximum Methane loading to the combustor is modeled at 3.60 lb/hr during truck loading and 11.97 tpy. After 98% capture and control methane emissions are 0.072 lb/hr and 0.24 tpy. This has been incorporated into the combustor calculation sheet in lieu of the AP-42 methane emission factors which are not appropriate for a gas stream of this composition.

EC-2 Combustor

Excess flash gas from the dehydration unit (not consumed in the re-boiler) is routed to this combustor (Abutec 100). For permitting purposes, it is conservatively assumed that the entire dehydration flash gas stream will be routed to the combustor. A run of GRI-GLYCalc closely matched the ProMax model. Thus for the sake of consistency, the ProMax model is used herein. As shown in Stream 107 of the ProMax dehy model, the maximum flow is 3,338 scf/hr (80,111 SCFD) or 206.8 lb/hr. The heat content of this gas is 1397 BTU/scf. Thus, heat loading to the combustor from this stream is 4.66 MMBTU/Hr.

This combustor also received flash gas from the flash separators that is currently managed by the VRU. Based on a ProMax Model (Stream 14), this is approximately 52,300 SCFD (2,180 scf/hr) of gas with a heat content of 1834 BTU/scf. Thus, heat loading to the combustor based on this maximum flow is 3.97 MMBTU/Hr.

The combined maximum gas flow and heat loading to EC-2 is 5,520 scf/hr and 8.62 MMBTU/Hr. This is within the 9.2 MMBTU/Hr capacity of the proposed combustor.

VOC Emissions

VOC content of this combined vapor stream is approximately 40.1%. With a 98% capture and control efficiency of all VOCs going to the combustor, hourly VOC emissions are 3.11 lb/hr [388.72 lb/Hr x 0.401 x 0.02] and 7.62 tpy . This hourly and annual VOC emission rate has been entered into the preceding emissions spreadsheet.

GHG Emissions

Again, as noted in the ProMax model, these two emission sources have methane (a GHG) emissions as well as VOCs. Using the attached ProMax model, data, the maximum Methane emission from the combustor is 2.69 lb/hr [Max loading of 134.6 lb/hr at 98% capture and control] and 11.78 tpy, This has been incorporated into the combustor calculation sheet in lieu of the AP-42 emission factors which are not appropriate for a gas stream of this composition.

July 3, 2014

FESCO, Ltd.
1100 FESCO Avenue - Alice, Texas 78332

For: Triad Hunter, LLC
27724 S. Rt. 7
Marietta, Ohio 45750

Sample: Collins Spencer Production
Separator Hydrocarbon Liquid
Sampled @ 60 psig & 64 °F

Date Sampled: 06/10/14

Job Number: 43815.002

CHROMATOGRAPH EXTENDED ANALYSIS - GPA 2186-M

COMPONENT	MOL %	LIQ VOL %	WT %
Nitrogen	0.007	0.002	0.002
Carbon Dioxide	0.009	0.004	0.005
Methane	1.003	0.426	0.192
Ethane	5.054	3.388	1.810
Propane	9.860	6.809	5.177
Isobutane	2.992	2.454	2.071
n-Butane	10.489	8.289	7.260
2,2 Dimethylpropane	0.211	0.203	0.182
Isopentane	5.693	5.219	4.891
n-Pentane	8.990	8.169	7.724
2,2 Dimethylbutane	0.267	0.279	0.274
Cyclopentane	0.000	0.000	0.000
2,3 Dimethylbutane	0.515	0.529	0.528
2 Methylpentane	3.972	4.132	4.076
3 Methylpentane	2.531	2.591	2.598
n-Hexane	7.501	7.731	7.697
Heptanes Plus	40.906	49.774	55.515
Totals:	100.000	100.000	100.000

Characteristics of Heptanes Plus:

Specific Gravity	0.7440	(Water=1)
°API Gravity	58.69	@ 60°F
Molecular Weight	114.0	
Vapor Volume	20.72	CF/Gal
Weight	6.20	Lbs/Gal

Characteristics of Total Sample:

Specific Gravity	0.6671	(Water=1)
°API Gravity	80.62	@ 60°F
Molecular Weight	84.0	
Vapor Volume	25.21	CF/Gal
Weight	5.56	Lbs/Gal

Base Conditions: 14.650 PSI & 60 °F

Certified: FESCO, Ltd. - Alice, Texas

Analyst: XG
Processor: XGdjv
Cylinder ID: W-1231

David Dannhaus 361-661-7015

TANKS DATA INPUT REPORT - GPA 2186-M

COMPONENT	Mol %	LiqVol %	Wt %	
Carbon Dioxide	0.009	0.004	0.005	
Nitrogen	0.007	0.002	0.002	
Methane	1.003	0.426	0.192	
Ethane	5.054	3.388	1.810	
Propane	9.860	6.809	5.177	
Isobutane	2.992	2.454	2.071	
n-Butane	10.700	8.492	7.441	
Isopentane	5.693	5.219	4.891	
n-Pentane	8.990	8.169	7.724	
Other C-6's	7.285	7.531	7.475	
Heptanes	14.158	15.707	16.477	
Octanes	12.506	14.575	16.158	
Nonanes	4.731	6.363	7.146	
Decanes Plus	7.068	10.874	12.777	
Benzene	0.112	0.079	0.105	HAP
Toluene	0.558	0.468	0.612	HAP
E-Benzene	0.476	0.461	0.602	HAP
Xylenes	1.297	1.247	1.640	HAP
n-Hexane	7.501	7.731	7.697	HAP
2,2,4 Trimethylpentane	0.000	0.000	0.000	
Totals:	100.000	100.000	100.000	

10.65%

Characteristics of Total Sample:

Specific Gravity	0.6671	(Water=1)
°API Gravity	80.62	@ 60°F
Molecular Weight	84.0	
Vapor Volume	25.21	CF/Gal
Weight	5.56	Lbs/Gal

Characteristics of Decanes (C10) Plus:

Specific Gravity	0.7838	(Water=1)
Molecular Weight	151.8	

Characteristics of Atmospheric Sample:

°API Gravity	72.00	@ 60°F
Reid Vapor Pressure (ASTM D-5191)	8.57	psi

QUALITY CONTROL CHECK			
	Sampling Conditions	Test Samples	
Cylinder Number	------	W-1231*	T-3030
Pressure, PSIG	60	56	56
Temperature, °F	64	66	66

* Sample used for analysis

TOTAL EXTENDED REPORT - GPA 2186-M

COMPONENT	Mol %	LiqVol %	Wt %
Nitrogen	0.007	0.002	0.002
Carbon Dioxide	0.009	0.004	0.005
Methane	1.003	0.426	0.192
Ethane	5.054	3.388	1.810
Propane	9.860	6.809	5.177
Isobutane	2.992	2.454	2.071
n-Butane	10.489	8.289	7.260
2,2 Dimethylpropane	0.211	0.203	0.182
Isopentane	5.693	5.219	4.891
n-Pentane	8.990	8.169	7.724
2,2 Dimethylbutane	0.267	0.279	0.274
Cyclopentane	0.000	0.000	0.000
2,3 Dimethylbutane	0.515	0.529	0.528
2 Methylpentane	3.972	4.132	4.076
3 Methylpentane	2.531	2.591	2.598
n-Hexane	7.501	7.731	7.697
Methylcyclopentane	1.016	0.901	1.018
Benzene	0.112	0.079	0.105
Cyclohexane	1.088	0.928	1.090
2-Methylhexane	3.083	3.592	3.678
3-Methylhexane	2.655	3.056	3.168
2,2,4 Trimethylpentane	0.000	0.000	0.000
Other C-7's	1.234	1.352	1.458
n-Heptane	5.082	5.877	6.064
Methylcyclohexane	2.698	2.718	3.154
Toluene	0.558	0.468	0.612
Other C-8's	7.052	8.318	9.256
n-Octane	2.755	3.539	3.748
E-Benzene	0.476	0.461	0.602
M & P Xylenes	0.547	0.532	0.691
O-Xylene	0.750	0.715	0.948
Other C-9's	3.333	4.391	5.010
n-Nonane	1.398	1.972	2.136
Other C-10's	2.826	4.092	4.755
n-decane	0.672	1.034	1.138
Undecanes(11)	1.687	2.506	2.954
Dodecanes(12)	0.954	1.531	1.829
Tridecanes(13)	0.460	0.791	0.958
Tetradecanes(14)	0.241	0.445	0.546
Pentadecanes(15)	0.119	0.235	0.292
Hexadecanes(16)	0.053	0.112	0.140
Heptadecanes(17)	0.029	0.064	0.081
Octadecanes(18)	0.013	0.031	0.039
Nonadecanes(19)	0.009	0.022	0.028
Eicosanes(20)	0.002	0.005	0.006
Heneicosanes(21)	0.001	0.003	0.004
Docosanes(22)	0.001	0.002	0.002
Tricosanes(23)	0.000	0.001	0.002
Tetracosanes(24)	0.000	0.001	0.002
Pentacosanes(25)	0.000	0.000	0.001
Hexacosanes(26)	0.000	0.001	0.001
Heptacosanes(27)	0.000	0.000	0.000
Octacosanes(28)	0.000	0.000	0.000
Nonacosanes(29)	0.000	0.000	0.000
Triacontanes(30)	0.000	0.000	0.000
Hentriacontanes Plus(31+)	0.000	0.000	0.000
Total	100.000	100.000	100.000

113	TRIAD HUNTER	SPENCER BEFORE J.T.	800	06/27/12	UCP	BORON

>

Chandler Engineering Co.
Model 292/2920 BTU Analyzer

Test time: June28 12 09:30
Test #:138

Calibration #: 1
Location No. :3812

	Standard/Dry Analysis				Saturated/Wet Analysis		
	Mole%	BTU*	R.Den.*	GPM**	Mole%	BTU*	R.Den.*
Methane	77.239	781.92	0.4278	--	75.895	768.31	0.4204
Ethane	15.147	268.67	0.1573	4.0498	14.883	264.00	0.1545
Propane	4.777	120.47	0.0727	1.3157	4.694	118.37	0.0715
i-Butane	0.477	15.54	0.0096	0.1560	0.468	15.27	0.0094
n-Butane	1.036	33.89	0.0208	0.3266	1.018	33.30	0.0204
i-Pentane	0.174	6.97	0.0043	0.0635	0.171	6.85	0.0043
n-Pentane	0.181	7.29	0.0045	0.0657	0.178	7.16	0.0044
(C6+)	0.098	4.96	0.0031	0.0421	0.096	4.87	0.0030
Moisture	0.000	0.00	0.0000	--	1.740	0.88	0.0108
Nitrogen	0.625	0.00	0.0060	--	0.614	0.00	0.0059
(CO2)	0.247	0.00	0.0037	--	0.242	0.00	0.0037
Ideal	100.00	1239.7	0.7099	6.0194			

* : Uncorrected for compressibility at 60.0F & 14.730PSIA.
**: Liquid Volume reported at 60.0F.

		Standard/Dry Analysis	Saturated/Wet Analysis
Relative Density	=	0.7121	0.7107
Compressibility Factor	=	0.9965	0.9964
Gross Heating Value	=	1244.1 Btu/CF	1223.4 Btu/CF

United Chart Processors
Natural Gas Measurement

1461 Masonic Park Road
Marietta, Ohio 45750

Phone: 740.373.5801
Fax: 740.373.8336

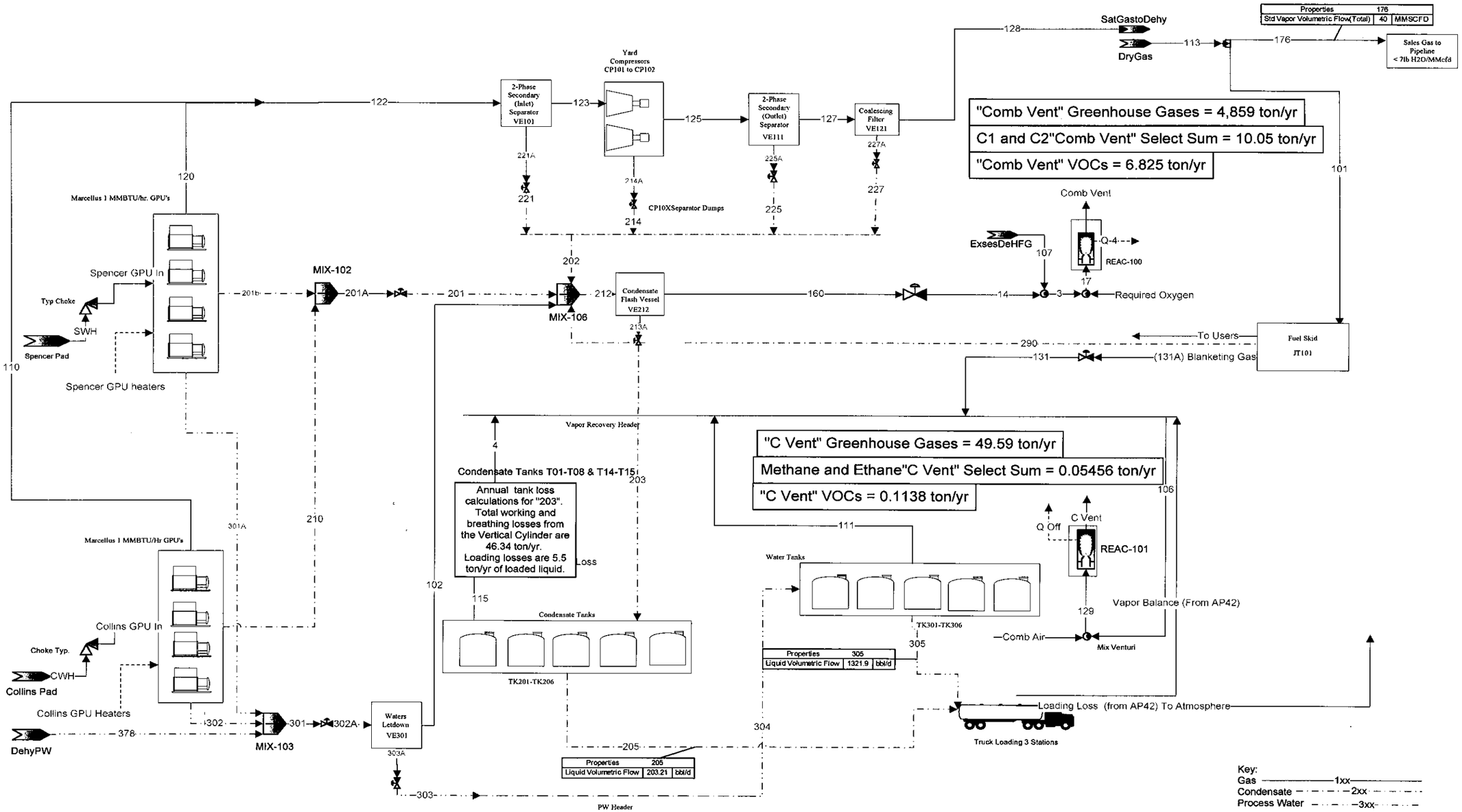
SatGastoDehy
DryGas
Properties 176
Std Vapor Volumetric Flow(Total) 40 MMSCFD
Sales Gas to Pipeline < 7lb H2O/MMcfd
Yard Compressors CP101 to CP102
2-Phase Secondary (Inlet) Separator VE101
2-Phase Secondary (Outlet) Separator VE111
Coalescing Filter VE121
"Comb Vent" Greenhouse Gases = 4,859 ton/yr
C1 and C2"Comb Vent" Select Sum = 10.05 ton/yr
"Comb Vent" VOCs = 6.825 ton/yr
Comb Vent
REAC-100
ExsesDeHFG
Required Oxygen
Marcellus 1 MMBTU/hr. GPU's
Spencer GPU In
Typ Choke
SWH
Spencer Pad
Spencer GPU heaters
MIX-102
MIX-106
Condensate Flash Vessel VE212
CP10XSeparator Dumps
To Users
Fuel Skid JT101
(131A) Blanketing Gas
Vapor Recovery Header
"C Vent" Greenhouse Gases = 49.59 ton/yr
Methane and Ethane"C Vent" Select Sum = 0.05456 ton/yr
"C Vent" VOCs = 0.1138 ton/yr
Condensate Tanks T01-T08 & T14-T15
Annual tank loss calculations for "203". Total working and breathing losses from the Vertical Cylinder are 46.34 ton/yr. Loading losses are 5.5 ton/yr of loaded liquid.
Loss
Condensate Tanks
TK201-TK206
Water Tanks
TK301-TK306
Q Off
C Vent
REAC-101
Vapor Balance (From AP42)
Comb Air
Mix Venturi
Properties 305
Liquid Volumetric Flow 1321.9 bbl/d
Loading Loss (from AP42) To Atmosphere
Truck Loading 3 Stations
Marcellus 1 MMBTU/Hr GPU's
Collins GPU In
Choke Typ.
CWH
Collins Pad
Collins GPU Heaters
DehyPW
MIX-103
Waters Letdown VE301
Properties 205
Liquid Volumetric Flow 203.21 bbl/d
PW Header
Key:
Gas 1xx
Condensate 2xx
Process Water 3xx

Process Streams		(131A) Blanketing Gas AP42	Loading Loss	C Vent	Collins GPU In	Comb Air	Comb Vent	1	2	3	4	7	8	10	11	12	14	17	101	102	106	107	110
Composition	Status:	Solved	Solved	Unsolved	Solved	Solved	Solved	Solved	Solved	Solved	Unsolved	Solved	Solved	Solved	Solved	Solved	Solved	Solved	Solved	Solved	Unsolved	Solved	Solved
Phase: Total	From Block:	SPLT-101	--	REAC-101	Choke Typ.	--	REAC-100	CMPR-100	XCHG-100	MXSP-101	MIX-108	VLVE-100	--	VSSL-100	VSSL-100	XCHG-101	VLVE-106	MXSP-100	SPLT-100	VE301	Vapor Recovery Header	ExsesDeHFG	Marcellus 1 MMBTU/Hr GPU's
	To Block:	BGR131	--	--	Marcellus 1 MMBTU/Hr GPU's	Mix Venturi	--	XCHG-100	CP10XSeparator Dumps	MXSP-100	--	VSSL-100	MIX-108	XCHG-101	XCHG-101	SPLT-101	MXSP-101	REAC-100	VLVE-100	MIX-106	Mix Venturi	MXSP-101	MIX-105
Mass Fraction		%	%	%	%	%	%	%	%	%	%	%	%	%	%	%	%	%	%	%	%	%	%
Triethylene Glycol		8.30392E-11	1.18023E-10*		0	0*	0	0	0	2.49644E-11	5.76449E-11	0.000274753	1.18023E-10*	0.00331354	8.30392E-11	8.30392E-11	5.33633E-11	5.28057E-12	0.000274753	4.94283E-11		0	0
Oxygen		0	0*		0	100*	0.788476	0	0	0	0	0	0*	0	0	0	0	78.8476	0	0		0	0
Nitrogen		0.640054	0.000111893*		0.472751	0*	0.0625477	0.585972	0.585972	0.295700	0.00334699	0.587285	0.000111893*	0.00365557	0.640054	0.640054	0.0809673	0.0625477	0.587285	0.348206		0.484464	0.593291
CO2		0.386497	0.0594565*		0.289031	0*	60.3108	0.357092	0.357092	0.430792	0.115209	0.357317	0.0594565*	0.0345890	0.386497	0.386497	0.324060	0.0911229	0.357317	1.78187		0.524817	0.361295
Water		0.00635820	0.145719*		18.2805	0*	38.6285	0.179231	0.179231	0.170212	0.508929	0.00724292	0.145719*	0.0170280	0.00635820	0.00635820	0.363842	0.0360040	0.00724292	1.17963		0	0.153602
Methane		59.5479	0.398757*		43.4516	0*	0.0732672	54.6166	54.6166	34.6378	2.63982	54.7325	0.398757*	1.47299	59.5479	59.5479	19.6880	7.32672	54.7325	57.1801		47.7795	54.4992
Ethane		22.9791	15.8080*		17.4165	0*	0.0515440	21.5199	21.5199	24.3679	18.9586	21.5590	15.8080*	5.85293	22.9791	22.9791	27.7076	5.15440	21.5590	22.4314		21.4322	21.7706
Propane		11.1445	30.4962*		9.30964	0*	0.0392777	11.4202	11.4202	18.5689	32.6502	11.4373	30.4962*	14.6764	11.1445	11.1445	25.1602	3.92777	11.4373	11.2370		12.7748	11.5301
i-Butane		1.39147	7.49860*		1.46266	0*	0.00664075	1.77122	1.77122	3.13948	7.12502	1.77385	7.49860*	6.00301	1.39147	1.39147	4.46228	0.664075	1.77385	0.640693		1.97665	1.78155
n-Butane		2.89703	21.0912*		3.65774	0*	0.0172674	4.38905	4.38905	8.16335	18.7539	4.39397	21.0912*	20.9503	2.89703	2.89703	11.2066	1.72674	4.39397	3.21351		5.48813	4.40257
i-Pentane		0.451963	6.62946*		1.10838	0*	0.00507827	1.27690	1.27690	2.40080	5.38135	1.27763	6.62946*	10.4096	0.451963	0.451963	3.05726	0.507827	1.27763	0.590492		1.82374	1.26565
n-Pentane		0.427781	8.07037*		1.38945	0*	0.00638678	1.56802	1.56802	3.01941	6.43454	1.56824	8.07037*	14.1818	0.427781	0.427781	3.65005	0.638678	1.56824	0.734388		2.46505	1.54479
Isohexane		0.0755006	3.81985*		0.764695	0*	0.00312842	0.776979	0.776979	1.47899	2.87542	0.776624	3.81985*	8.53110	0.0755006	0.0755006	1.62470	0.312842	0.776624	0.171156		1.35090	0.742139
n-Hexane		0.0375687	2.75445*		0.614831	0*	0.00241286	0.589161	0.589161	1.14070	2.05684	0.588575	2.75445*	6.68275	0.0375687	0.0375687	1.17149	0.241286	0.588575	0.101012		1.11364	0.553343
Benzene		0.000644760	0.0256426*		0.00934469	0*	0.000123312	0.00888785	0.00888785	0.0582968	0.0298335	0.00817641	0.0256426*	0.0914770	0.000644760	0.000644760	0.0182134	0.0123312	0.00817641	0.0401765		0.0935326	0.00835411
Cyclohexene		0.00228613	0.210513*		0.0632829	0*	0.000460550	0.0557853	0.0557853	0.217730	0.182428	0.0544499	0.210513*	0.631385	0.00228613	0.00228613	0.107721	0.0460550	0.0544499	0.162095		0.314434	0.0512340
Heptane, 2-Methyl-		0.00129712	0.818341*		0.523815	0*	0.00103802	0.249094	0.249094	0.490733	0.585290	0.248149	0.818341*	2.97835	0.00129712	0.00129712	0.355893	0.103802	0.248149	0.0112662		0.609266	0.200252
n-Heptane		0.00408308	0.859869*		0.343263	0*	0.00104142	0.239965	0.239965	0.492343	0.662413	0.239201	0.859869*	2.83963	0.00408308	0.00408308	0.395818	0.104142	0.239201	0.0351006		0.577194	0.208105
Toluene		0.000236058	0.0475230*		0.0280567	0*	0.000244683	0.0180021	0.0180021	0.115676	0.0484469	0.0158385	0.0475230*	0.188403	0.000236058	0.000236058	0.0302815	0.0244683	0.0158385	0.0761492		0.190743	0.0153666
Isooctane		0.00541052	0.963236*		0.364575	0*	0.00110720	0.263186	0.263186	0.523439	0.751708	0.262503	0.963236*	3.10596	0.00541052	0.00541052	0.445127	0.110720	0.262503	0.00632879		0.592280	0.230357
Octane		0.000246354	0.181760*		0.158637	0*	0.000281174	0.0635490	0.0635490	0.132928	0.139855	0.0631968	0.181760*	0.759434	0.000246354	0.000246354	0.0872022	0.0281174	0.0631968	0.00637525		0.173124	0.0499271
Ethylbenzene		9.18308E-06	0.00687867*		0.00821534	0*	3.50873E-05	0.00294466	0.00294466	0.0165879	0.00645545	0.00253828	0.00687867*	0.0305103	9.18308E-06	9.18308E-06	0.00415497	0.00350873	0.00253828	0.0110998		0.0275172	0.00229366
o-Xylene		1.84595E-05	0.0183991*		0.0312464	0*	0.000117149	0.00926298	0.00926298	0.0553833	0.0191234	0.00743006	0.0183991*	0.0894030	1.84595E-05	1.84595E-05	0.0126176	0.0117149	0.00743006	0.0378961		0.0929770	0.00708022
Isononane		2.03882E-05	0.0541592*		0.0893968	0*	8.85441E-05	0.0201463	0.0201463	0.0418601	0.0386070	0.0200006	0.0541592*	0.240983	2.03882E-05	2.03882E-05	0.0243591	0.00885441	0.0200006	0.00179443		0.0572446	0.0149117
Nonane		8.84788E-06	0.0280661*		0.0659937	0*	5.48450E-05	0.0119055	0.0119055	0.0259285	0.0218329	0.0117918	0.0280661*	0.142112	8.84788E-06	8.84788E-06	0.0140982	0.00548450	0.0117918	0.00166991		0.0363281	0.00875104
Decane		1.43254E-06	0.0133850*		0.0964087	0*	3.17998E-05	0.00698246	0.00698246	0.0150337	0.0108528	0.00688145	0.0133850*	0.0829750	1.43254E-06	1.43254E-06	0.00742407	0.00317998	0.00688145	0.000563093		0.0217230	0.00527198
Mass Flow		lb/h	lb/h	lb/h	lb/h	lb/h	lb/h	lb/h	lb/h	lb/h	lb/h	lb/h	lb/h	lb/h	lb/h	lb/h	lb/h	lb/h	lb/h	lb/h	lb/h	lb/h	lb/h
Triethylene Glycol		4.51340E-14	1.48192E-12*		0		0	0	0	9.70096E-11	4.95998E-11	0.00118362	1.24861E-11*	0.00118362	3.28066E-10	3.28066E-10	9.70096E-11	9.70096E-11	0.00118362	4.01591E-12		0	0
Oxygen		0	0*		0		14.4851	0	0	0	0	0	0*	0	0	0	0	1448.51	0	0		0	0
Nitrogen		0.000347886	1.40495E-06*		282.985		1.14907	565.819	565.819	1.14907	0.00287987	2.52999	1.18375E-05*	0.00130580	2.52869	2.52869	0.147191	1.14907	2.52999	0.0282907		1.00188	282.893
CO2		0.000210071	0.000746549*		173.012		1107.97	344.811	344.811	1.67402	0.0991298	1.53930	0.00629011*	0.0123554	1.52695	1.52695	0.589111	1.67402	1.53930	0.144772		1.08491	172.272
Water		3.45585E-06	0.00182968*		10942.6		709.647	173.067	173.067	0.661431	0.437901	0.0312021	0.0154161*	0.00608251	0.0251196	0.0251196	0.661431	0.661431	0.0312021	0.0958420		0	73.2403
Methane		0.0323659	0.00500688*		26009.8		1.34600	52738.2	52738.2	134.600	2.27139	235.785	0.0421859*	0.526161	235.259	235.259	35.7910	134.600	235.785	4.64572		98.8086	25986.3
Ethane		0.0124897	0.198489*		10425.4		0.946918	20779.8	20779.8	94.6918	16.3126	92.8752	1.67239*	2.09071	90.7845	90.7845	50.3698	94.6918	92.8752	1.82249		44.3220	10380.6
Propane		0.00605731	0.382918*		5572.68		0.721573	11027.5	11027.5	72.1573	28.0934	49.2714	3.22631*	5.24251	44.0289	44.0289	45.7390	72.1573	49.2714	0.912978		26.4184	5497.78
i-Butane		0.000756299	0.0941541*		875.536		0.121998	1710.30	1710.30	12.1998	6.13062	7.64165	0.793303*	2.14432	5.49733	5.49733	8.11202	12.1998	7.64165	0.0520545		4.08774	849.476
n-Butane		0.00157461	0.264825*		2189.49		0.317221	4238.10	4238.10	31.7221	16.1365	18.9290	2.23131*	7.48358	11.4454	11.4454	20.3726	31.7221	18.9290	0.261088		11.3495	2099.23
i-Pentane		0.000245654	0.0832410*		663.466		0.0932933	1232.99	1232.99	9.32933	4.63030	5.50396	0.701353*	3.71837	1.78559	1.78559	5.55782	9.32933	5.50396	0.0479758		3.77151	603.488
n-Pentane		0.000232510	0.101333*		831.713		0.117332	1514.09	1514.09	11.7332	5.53651	6.75590	0.853793*	5.06585	1.69005	1.69005	6.63545	11.7332	6.75590	0.0596669		5.09775	736.584
Isohexane		4.10365E-05	0.0479629*		457.741		0.0574725	750.257	750.257	5.74725	2.47412	3.34565	0.404115*	3.04737	0.298283	0.298283	2.95356	5.74725	3.34565	0.0139059		2.79369	353.866
n-Hexane		2.04195E-05	0.0345855*		368.033		0.0443268	568.898	568.898	4.43268	1.76978	2.53555	0.291403*	2.38713	0.148424	0.148424	2.12966	4.43268	2.53555	0.00820698		2.30302	263.845
Benzene		3.50444E-07	0.000321975*		5.59366		0.00226537	8.58218	8.58218	0.226537	0.0256698	0.0352235	0.00271283*	0.0326762	0.00254728	0.00254728	0.0331102	0.226537	0.0352235	0.00326423		0.193427	3.98340
Cyclohexene		1.24257E-06	0.00264325*		37.8807		0.00846080	53.8667	53.8667	0.846080	0.156968	0.234567	0.0222709*	0.225535	0.00903192	0.00903192	0.195828	0.846080	0.234567	0.0131698		0.650253	24.4294
Heptane, 2-Methyl-		7.05020E-07	0.0102753*		313.552		0.0190695	240.527	240.527	1.90695	0.503604	1.06901	0.0865752*	1.06389	0.00512459	0.00512459	0.646980	1.90695	1.06901	0.000915343		1.25997	95.4841
n-Heptane		2.21926E-06	0.0107967*		205.475		0.0191320	231.712	231.712	1.91320	0.569964	1.03047	0.0909686*	1.01434	0.0161312	0.0161312	0.719561	1.91320	1.03047	0.00285183		1.19364	99.2287
Toluene		1.28304E-07	0.000596710*		16.7945		0.00449508	17.3830	17.3830	0.449508	0.0416854	0.0682314	0.00502763*	0.0672988	0.000932603	0.000932603	0.0550490	0.449508	0.0682314	0.00618691		0.394459	7.32708
Isooctane		2.94076E-06	0.0120946*		218.232		0.0203404	254.135	254.135	2.03404	0.646796	1.13085	0.101904*	1.10947	0.0213756	0.0213756	0.809199	2.03404	1.13085	0.000514196		1.22484	109.839
Octane		1.33900E-07	0.00228222*		94.9588		0.00516547	61.3634	61.3634	0.516547	0.120336	0.272249	0.0192290*	0.271275	0.000973280	0.000973280	0.158526	0.516547	0.272249	0.000517971		0.356022	23.8062
Ethylbenzene		4.99125E-09	8.63702E-05*		4.91764		0.000644592	2.84339	2.84339	0.0644592	0.00555450	0.0109348	0.000727719*	0.0108985	3.62800E-05	3.62800E-05	0.00755335	0.0644592	0.0109348	0.000901831		0.0569058	1.09366
o-Xylene		1.00332E-08	0.000231023*		18.7038		0.00215215	8.94441	8.94441	0.215215	0.0164544	0.0320083	0.00194650*	0.0319354	7.29287E-05	7.29287E-05	0.0229376	0.215215	0.0320083	0.00307895		0.192277	3.37599
Isononane		1.10815E-08	0.000680035*		53.5122		0.00162665	19.4534	19.4534	0.162665	0.0332188	0.0861615	0.00572969*	0.0860809	8.05483E-05	8.05483E-05	0.0442825	0.162665	0.0861615	0.000145792		0.118382	7.11019
Nonane		4.80905E-09	0.000352405*		39.5033		0.00100756	11.4960	11.4960	0.100756	0.0187858	0.0507984	0.00296921*	0.0507634	3.49557E-05	3.49557E-05	0.0256292	0.100756	0.0507984	0.000135876		0.0751269	4.17266
Decane		7.78623E-10	0.000168065*		57.7095		0.000584197	6.74232	6.74232	0.0584197	0.00933810	0.0296449	0.00141604*	0.0296393	5.65959E-06	5.65959E-06	0.0134963	0.0584197	0.0296449	4.57497E-05		0.0449234	2.51378

Process Streams		(131A) Blanketing Gas AP42	Loading Loss	C Vent	Collins GPU In	Comb Air	Comb Vent	1	2	3	4	7	8	10	11	12	14	17	101	102	106	107	110
Properties	Status:	Solved	Solved	Unsolved	Solved	Solved	Solved	Solved	Solved	Solved	Unsolved	Solved	Solved	Solved	Solved	Solved	Solved	Solved	Solved	Solved	Unsolved	Solved	Solved
Phase: Total	From Block:	SPLT-101	--	REAC-101	Choke Typ.	--	REAC-100	CMPR-100	XCHG-100	MXSP-101	MIX-108	VLVE-100	--	VSSL-100	VSSL-100	XCHG-101	VLVE-106	MXSP-100	SPLT-100	VE301	Vapor Recovery Header	ExsesDeHFG	Marcellus 1 MMBTU/Hr GPU's
	To Block:	BGR131	--	--	Marcellus 1 MMBTU/Hr GPU's	Mix Venturi	--	XCHG-100	CP10XSeparator Dumps	MXSP-100	--	VSSL-100	MIX-108	XCHG-101	XCHG-101	SPLT-101	MXSP-101	REAC-100	VLVE-100	MIX-106	Mix Venturi	MXSP-101	MIX-105
Property	Units																						
Temperature	°F	80	74.1259*	600*	80.2148	70*	600*	239.681	100	126.043		48.4905	74.1259*	-20	-20*	80.0000	58.7725	79.2784	104.397	85.5034		180.000	80*
Pressure	psig	100	3.16475	0*	280*	0*	1	810	800	1	1	120*	3.16475	100	100*	100	1*	1	788	30*	1	30	280
Mass Flow	lb/h	0.0543526	1.25562*		59859.2		1837.11	96560.8	96560.8	388.592	86.0436	430.795	10.5794*	35.7207	395.074	395.074	181.791	1837.11	430.795	8.12472		206.801	47681.9
Mass Fraction Vapor	%	100	100		79.6727	100	100	100	99.9382	100		99.3674	100	0	100	100	100	100	100	100		100	100
Enthalpy	MMBtu/h	-8.95957E-05	-0.00126088		-151.865		-8.05207	-147.980	-156.220	-0.532594	-0.0918424	-0.692319	-0.0106236	-0.0408353	-0.670211	-0.651246	-0.230584	-0.540411	-0.692319	-0.0139106		-0.302010	-76.4580
Mole Fraction Vapor	%	100	100*		77.9081	100	100	100	99.9253	100		99.8311	100*	0	100	100	100	100	100	100		100	100
Molecular Weight	lb/lbmol	20.6260	48.6928		21.3137	31.9988	28.1743	21.7947	21.7947	26.7284	44.3224	21.7973	48.6928	58.6112	20.6260	20.6260	31.6571	30.7176	21.7973	20.9392		23.5107	21.7937
Molar Flow	lbmol/h	0.00263515	0.0257866		2808.48		65.2051	4430.46	4430.46	14.5386	1.94131	19.7637	0.217267	0.609452	19.1542	19.1542	5.74250	59.8063	19.7637	0.388014		8.79605	2187.87
Specific Gravity		0.712159	1.68123			1.10483	0.972781	0.752513		0.922859			1.68123	0.636964	0.712159	0.712159	1.09303	1.06060	0.752603	0.722975		0.811760	0.752479
Dynamic Viscosity	cP	0.0107756	0.00805872			0.0202735	0.0249957	0.0142723		0.0107343			0.00805872	0.271216	0.00902232	0.0107756	0.00911405	0.0174474	0.0126364	0.0108199		0.0120233	0.0109690
Kinematic Viscosity	cSt	1.60135	3.23254			15.2855	40.0761	0.344550		9.99058			3.23254	0.425620	1.06422	1.60135	6.30650	13.0433	0.224986	4.17744		4.86472	0.568775
Thermal Conductivity	Btu/(h*ft*°F)	0.0177577	0.00998433			0.0147670	0.0247650	0.0267181		0.0172903			0.00998433	0.07292617	0.0139812	0.0177577	0.0129647	0.0151038	0.0214439	0.0175917		0.0209740	0.0181284
Std Vapor Volumetric Flow	MMSCFD	2.40000E-05*	0.000234855		25.5786		0.593864	40.3510	40.3510	0.132412	0.0176807	0.18	0.00197879	0.00555066	0.174449	0.174449	0.0523006	0.544694	0.18*	0.00353389		0.0801112	19.9263
Std Liquid Volumetric Flow	Mbbl/d	1.10027E-05	0.000166425		10.2073		0.143217	18.8616	18.8616	0.0683809	0.0118890	0.0842558	0.00140223	0.00427988	0.0799759	0.0799759	0.0296583	0.155292	0.0842558	0.00161064		0.0387226	9.32008
Gross Ideal Gas Heating Value	Btu/ft^3	1244.50	2752.72		1053.24	0	33.8919	1304.96	1304.96	1569.38	2509.10	1307.30	2752.72	3281.06	1244.50	1244.50	1834.08	381.507	1307.30	1233.18		1396.57	1305.13
CpCv Ratio		1.28234	1.12322		1.35270	1.39932	1.26172	1.31501	1.54725	1.19088		1.29444	1.12322	1.26895	1.33591	1.28234	1.18217	1.32236	1.52736	1.25921		1.20511	1.33522
Compressibility		0.972374	0.975490		0.721438	0.999154	0.998724	0.926114	0.815808	0.995063		0.954917	0.975490	0.0358636	0.947339	0.972374	0.989901	0.998250	0.824351	0.989321		0.992130	0.921104
Mass Volume	ft^3/lb	2.38047	6.42538		0.665474	12.0773	25.6827	0.386703	0.275954	14.9087		1.77367	6.42538	0.0251719	1.88944	2.38047	11.0840	11.9750	0.285202	6.18453		6.48120	0.830606
Mass Density	lb/ft^3	0.420085	0.155633		1.50269	0.0827999	0.0389368	2.58596	3.62379	0.0670750		0.563803	0.155633	39.7268	0.529257	0.420085	0.0902198	0.0835072	3.50628	0.161694		0.154293	1.20394
Gross Liquid Heating Value	Btu/lb	22635.6	21294.5		18500.5	0	1.80019	22650.8	22650.8	22179.0	21324.5	22690.7	21294.5	21088.0	22835.6	22835.6	21857.2	4691.39	22690.7	22274.1		22461.9	22654.9
Net Ideal Gas Heating Value	Btu/ft^3	1128.54	2535.69		947.010	0	3.19238	1184.93	1184.93	1431.78	2308.32	1187.14	2535.69	3028.84	1128.54	1128.54	1678.61	348.056	1187.14	1118.02		1270.63	1185.10

Process Streams		110	111	113	115	120	122	123	125	127	128	129	131	160	176	201	201A	201b
Composition	Status:	Solved	Solved	Solved	Solved	Solved	Solved	Solved	Solved	Solved	Solved	Unsolved	Solved	Solved	Solved	Solved	Solved	Solved
Phase: Total	From Block:	Marcellus 1 MMBTU/Hr GPU's	TK301-TK306	DryGas	TK201-TK206	Marcellus 1 MMBTU/hr. GPU's	MIX-105	VE101	CP10XSeparator Dumps	VE111	VE121	Mix Venturi	BGR131	VE212	SPLT-100	VLVE-101	MIX-102	Marcellus 1 MMBTU/hr. GPU's
	To Block:	MIX-105	Vapor Recovery Header	SPLT-100	MIX-108	MIX-105	VE101	CMPR-100	VE111	VE121	SatGastoDehy	REAC-101	Vapor Recovery Header	VLVE-106	--	MIX-106	VLVE-101	MIX-102
Mass Fraction		%	%	%	%	%	%	%	%	%	%	%	%	%	%	%	%	%
Triethylene Glycol		0	1.47711E-11	0.000274753	4.91805E-11	0	0	0	0	0	0		8.30392E-11	5.33633E-11	0.000274753	0	0	0
Oxygen		0	0	0	0	0	0	0	0	0	0		0	0	0	0	0	0
Nitrogen		0.593291	0.214652	0.587285	0.00380052	0.578552	0.585829	0.585972	0.586334	0.586339	0.586343		0.640054	0.0809673	0.587285	0.00548559	0.00548559	0.00515335
CO2		0.361295	3.52071	0.357317	0.123025	0.352831	0.357009	0.357092	0.357309	0.357312	0.357314		0.386497	0.324060	0.357317	0.0246945	0.0246945	0.0226589
Water		0.153602	1.41010	0.00724292	0.559848	0.210832	0.182579	0.179231	0.117586	0.116761	0.116125		0.00635820	0.363842	0.00724292	0.0125552	0.0125552	0.0142964
Methane		54.4992	56.6112	54.7325	2.95399	54.7050	54.6034	54.6166	54.6503	54.6507	54.6511		59.5479	19.6880	54.7325	1.50400	1.50400	1.42039
Ethane		21.7706	22.9434	21.5590	19.4003	21.2663	21.5152	21.5199	21.5332	21.5334	21.5335		22.9791	27.7076	21.5590	3.13901	3.13901	2.84165
Propane		11.5301	10.6374	11.4373	32.9521	11.3097	11.4185	11.4202	11.4273	11.4274	11.4274		11.1445	25.1602	11.4373	5.32763	5.32763	4.76976
i-Butane		1.78155	0.325458	1.77385	7.07265	1.76104	1.77116	1.77122	1.77231	1.77233	1.77234		1.39147	4.46228	1.77385	1.85731	1.85731	1.64547
n-Butane		4.40257	2.82236	4.39397	18.4263	4.37635	4.38930	4.38905	4.39176	4.39180	4.39183		2.89703	11.2066	4.39397	6.41284	6.41284	5.65634
i-Pentane		1.26565	0.383652	1.27763	5.20638	1.28901	1.27748	1.27690	1.27769	1.27770	1.27771		0.451963	3.05726	1.27763	4.28289	4.28289	3.80243
n-Pentane		1.54479	0.497712	1.56824	6.20521	1.59270	1.56905	1.56802	1.56898	1.56900	1.56901		0.427781	3.65005	1.56824	6.80903	6.80903	6.06976
Isohexane		0.742139	0.0677055	0.776624	2.74302	0.813692	0.778368	0.776979	0.777459	0.777465	0.777470		0.0755006	1.62470	0.776624	7.53566	7.53566	6.87515
n-Hexane		0.553343	0.0327081	0.588575	1.95905	0.626968	0.590621	0.589161	0.589525	0.589530	0.589533		0.0375687	1.17149	0.588575	7.62427	7.62427	7.05992
Benzene		0.00835411	0.0635290	0.00817641	0.0304210	0.00945222	0.00891011	0.00888785	0.00889315	0.00889322	0.00889328		0.000644760	0.0182134	0.00817641	0.115775	0.115775	0.108394
Cyclohexene		0.0512340	0.267008	0.0544499	0.178491	0.0606129	0.0559827	0.0557853	0.0558196	0.0558201	0.0558205		0.00228613	0.107721	0.0544499	0.996815	0.996815	0.945016
Heptane, 2-Methyl-		0.200252	0.00123645	0.248149	0.552618	0.304204	0.252885	0.249094	0.249248	0.249250	0.249252		0.00129712	0.355893	0.248149	17.6259	17.6259	18.9400
n-Heptane		0.208105	0.00964141	0.239201	0.634732	0.274384	0.241664	0.239965	0.240114	0.240116	0.240117		0.00408308	0.395818	0.239201	8.17345	8.17345	8.19408
Toluene		0.0153666	0.119268	0.0158385	0.0485764	0.0208764	0.0181563	0.0180021	0.0180130	0.0180131	0.0180133		0.000236058	0.0302815	0.0158385	0.734459	0.734459	0.751534
Isooctane		0.230357	0.000359210	0.262503	0.722054	0.298592	0.264906	0.263186	0.263349	0.263351	0.263353		0.00541052	0.445127	0.262503	8.31469	8.31469	8.29977
Octane		0.0499271	0.00148004	0.0631968	0.133980	0.0793394	0.0648191	0.0635490	0.0635883	0.0635888	0.0635892		0.000246354	0.0872022	0.0631968	5.86118	5.86118	6.45475
Ethylbenzene		0.00229366	0.0149043	0.00253828	0.00639612	0.00371589	0.00301377	0.00294466	0.00294646	0.00294648	0.00294650		9.18308E-06	0.00415497	0.00253828	0.318210	0.318210	0.355633
o-Xylene		0.00708022	0.0544214	0.00743006	0.0192249	0.0119484	0.00954507	0.00926298	0.00926860	0.00926868	0.00926874		1.84595E-05	0.0126176	0.00743006	1.29517	1.29517	1.47483
Isononane		0.0149117	0.000393206	0.0200006	0.0364267	0.0269711	0.0210176	0.0201463	0.0201588	0.0201589	0.0201591		2.03882E-05	0.0243591	0.0200006	3.99262	3.99262	4.63452
Nonane		0.00875104	0.000542177	0.0117918	0.0209590	0.0163008	0.0125736	0.0119055	0.0119128	0.0119129	0.0119130		8.84788E-06	0.0140982	0.0117918	3.07821	3.07821	3.62413
Decane		0.00527198	0.000115045	0.00688145	0.0104978	0.0106491	0.00799451	0.00698246	0.00698678	0.00698684	0.00698688		1.43254E-06	0.00742407	0.00688145	4.95818	4.95818	6.03435
Mass Flow		lb/h	lb/h	lb/h	lb/h	lb/h	lb/h	lb/h	lb/h	lb/h	lb/h	lb/h	lb/h	lb/h	lb/h	lb/h	lb/h	lb/h
Triethylene Glycol		0	1.34548E-13	0.264213	3.71137E-11	0	0	0	0	0	0		4.51340E-14	9.70096E-11	0.263029	0	0	0
Oxygen		0	0	0	0	0	0	0	0	0	0		0	0	0	0	0	0
Nitrogen		282.893	0.00195524	564.756	0.00286803	282.928	565.820	565.819	565.819	565.819	565.819		0.000347886	0.147191	562.226	0.119153	0.119153	0.0448366
CO2		172.272	0.0320697	343.610	0.0928397	172.544	344.816	344.811	344.807	344.807	344.807		0.000210071	0.589111	342.071	0.536394	0.536394	0.197143
Water		73.2403	0.0128445	6.96508	0.422485	103.102	176.343	173.067	113.472	112.675	112.060		3.45585E-06	0.661431	6.93387	0.272713	0.272713	0.124386
Methane		25986.3	0.515666	52632.9	2.22921	26752.2	52738.5	52738.2	52738.1	52738.1	52738.1		0.0323659	35.7910	52397.1	32.6687	32.6687	12.3581
Ethane		10380.6	0.208989	20732.0	14.6402	10399.8	20780.4	20779.8	20779.8	20779.8	20779.8		0.0124897	50.3698	20639.1	68.1829	68.1829	24.7237
Propane		5497.78	0.0968954	10998.6	24.8671	5530.74	11028.5	11027.5	11027.4	11027.4	11027.4		0.00605731	45.7390	10949.3	115.722	115.722	41.4992
i-Butane		849.476	0.00296457	1705.80	5.33732	861.197	1710.67	1710.30	1710.30	1710.30	1710.30		0.000756299	8.11202	1698.16	40.3429	40.3429	14.3164
n-Butane		2099.23	0.0257086	4225.42	13.9052	2140.15	4239.39	4238.10	4238.10	4238.10	4238.10		0.00157461	20.3726	4206.49	139.294	139.294	49.2129
i-Pentane		603.488	0.00349465	1228.62	3.92895	630.361	1233.85	1232.99	1232.99	1232.99	1232.99		0.000245654	5.55782	1223.11	93.0294	93.0294	33.0830
n-Pentane		736.584	0.00453361	1508.08	4.68271	778.875	1515.46	1514.09	1514.09	1514.09	1514.09		0.000232510	6.63545	1501.33	147.900	147.900	52.8098
Isohexane		353.866	0.000616723	746.832	2.07000	397.917	751.783	750.257	750.257	750.257	750.257		4.10365E-05	2.95356	743.486	163.683	163.683	59.8172
n-Hexane		263.845	0.000297935	565.997	1.47838	306.604	570.449	568.898	568.898	568.898	568.898		2.04195E-05	2.12966	563.461	165.608	165.608	61.4247
Benzene		3.98340	0.000578679	7.86275	0.0229570	4.62239	8.60579	8.58218	8.58199	8.58199	8.58199		3.50444E-07	0.0331102	7.82753	2.51478	2.51478	0.943079
Cyclohexene		24.4294	0.00243215	52.3611	0.134697	29.6413	54.0707	53.8667	53.8666	53.8666	53.8666		1.24257E-06	0.195828	52.1266	21.6520	21.6520	8.22209
Heptane, 2-Methyl-		95.4841	1.12627E-05	238.630	0.417029	148.764	244.248	240.527	240.527	240.527	240.527		7.05020E-07	0.646980	237.561	382.855	382.855	164.787
n-Heptane		99.2287	8.78226E-05	230.025	0.478996	134.181	233.410	231.712	231.712	231.712	231.712		2.21926E-06	0.719561	228.995	177.537	177.537	71.2924
Toluene		7.32708	0.00108640	15.2309	0.0366578	10.2091	17.5362	17.3830	17.3827	17.3827	17.3827		1.28304E-07	0.0550490	15.1627	15.9533	15.9533	6.53871
Isooctane		109.839	3.27201E-06	252.433	0.544892	146.020	255.859	254.135	254.135	254.135	254.135		2.94076E-06	0.809199	251.302	180.605	180.605	72.2120
Octane		23.8062	1.34815E-05	60.7725	0.101107	38.7991	62.6053	61.3634	61.3634	61.3634	61.3634		1.33900E-07	0.158526	60.5003	127.312	127.312	56.1594
Ethylbenzene		1.09366	0.000135762	2.44091	0.00482678	1.81717	2.91083	2.84339	2.84337	2.84337	2.84337		4.99125E-09	0.00755335	2.42998	6.91190	6.91190	3.09418
o-Xylene		3.37599	0.000495719	7.14504	0.0145079	5.84308	9.21907	8.94441	8.94431	8.94430	8.94430		1.00332E-08	0.0229376	7.11303	28.1326	28.1326	12.8317
Isononane		7.11019	3.58168E-06	19.2334	0.0274892	13.1896	20.2998	19.4534	19.4534	19.4534	19.4534		1.10815E-08	0.0442825	19.1472	86.7245	86.7245	40.3226
Nonane		4.17266	4.93863E-06	11.3394	0.0158166	7.97154	12.1442	11.4960	11.4960	11.4960	11.4960		4.80905E-09	0.0256292	11.2886	66.8623	66.8623	31.5317
Decane		2.51378	1.04793E-06	6.61747	0.00792206	5.20769	7.72147	6.74232	6.74232	6.74232	6.74232		7.78623E-10	0.0134963	6.58783	107.697	107.697	52.5018

Process Streams		110	111	113	115	120	122	123	125	127	128	129	131	160	176	201	201A	201b
Properties	Status:	Solved	Solved	Solved	Solved	Solved	Solved	Solved	Solved	Solved	Solved	Unsolved	Solved	Solved	Solved	Solved	Solved	Solved
Phase: Total	From Block:	Marcellus 1 MMBTU/Hr GPU's	TK301-TK306	DryGas	TK201-TK206	Marcellus 1 MMBTU/hr. GPU's	MIX-105	VE101	CP10XSeparator Dumps	VE111	VE121	Mix Venturi	BGR131	VE212	SPLT-100	VLVE-101	MIX-102	Marcellus 1 MMBTU/hr. GPU's
	To Block:	MIX-105	Vapor Recovery Header	SPLT-100	MIX-108	MIX-105	VE101	CMPR-100	VE111	VE121	SatGastoDehy	REAC-101	Vapor Recovery Header	VLVE-106	--	MIX-106	VLVE-101	MIX-102
Property	**Units**																	
Temperature	°F	80*	60*	104.397	55*	90*	85.1246	84.6182	100*	99.6927	99.3387		71.5321	62.8813	104.397	64.0691	83.9892	90
Pressure	psig	280	1*	788	1*	280	280	278	800*	798	793	0	1*	30*	788	30*	280	280
Mass Flow	lb/h	47681.9	0.910890	96163.9	75.4642	48902.7	96584.6	96560.8	96501.1	96500.3	96499.7		0.0543526	181.791	95733.2	2172.12	2172.12	870.048
Mass Fraction Vapor	%	100	100	100	100	100	99.9894	100	100	100	100		100	100	100	7.36096	0.00574008	0
Enthalpy	MMBtu/h	-76.4580	-0.00162047	-154.543	-0.0812188	-78.2875	-154.745	-154.723	-155.815	-155.820	-155.816		-8.95957E-05	-0.230584	-153.850	-2.15237	-2.15237	-0.851561
Mole Fraction Vapor	%	100	100	100	100	100	99.9955	100	100	100	100		100	100	100	18.0348	0.0206123	0
Molecular Weight	lb/lbmol	21.7937	20.9524	21.7973	43.7716	21.8020	21.7979	21.7947	21.7976	21.7976	21.7976		20.6260	31.6571	21.7973	78.1798	78.1798	80.7288
Molar Flow	lbmol/h	2187.87	0.0434741	4411.73	1.72404	2243.03	4430.90	4430.46	4427.15	4427.11	4427.07		0.00263515	5.74250	4391.97	27.7836	27.7836	10.7774
Specific Gravity		0.752479	0.723431	0.752603	1.51132	0.752766		0.752513	0.752611	0.752612	0.752613		0.712159	1.09303	0.752603			0.645775
Dynamic Viscosity	cP	0.0109690	0.0104049	0.0126364	0.00808789	0.0111304		0.0110400	0.0126421	0.0126323	0.0126115		0.0105017	0.00924030	0.0126364			0.255305
Kinematic Viscosity	cSt	0.568775	10.9675	0.224986	3.98046	0.590723		0.583061	0.217915	0.218164	0.219163		11.4980	2.22135	0.224986			0.395720
Thermal Conductivity	Btu/(h*ft*°F)	0.0181284	0.0164262	0.0214439	0.0100259	0.0185309		0.0183067	0.0213769	0.0213567	0.0213182		0.0170653	0.0132309	0.0214439			0.0647197
Std Vapor Volumetric Flow	MMSCFD	19.9263	0.000395946	40.1804	0.0157019	20.4287	40.3550	40.3510	40.3208	40.3204	40.3201		2.40000E-05	0.0523006	40.0004	0.253043	0.253043	0.0981567
Std Liquid Volumetric Flow	Mbbl/d	9.32008	0.000179645	18.8080	0.0104868	9.54399	18.8641	18.8616	18.8575	18.8575	18.8574		1.10027E-05	0.0296583	18.7237	0.233779	0.233779	0.0926553
Gross Ideal Gas Heating Value	Btu/ft^3	1305.13	1211.76	1307.30	2478.40	1305.04	1305.09	1304.96	1305.90	1305.91	1305.92		1244.50	1834.08	1307.30	4310.00	4310.00	4444.21
CpCv Ratio		1.33522	1.26132	1.52736	1.13901	1.32595	1.33039	1.33010	1.54738	1.54728	1.54569		1.25671	1.19369	1.52736	1.17250	1.20676	1.19892
Compressibility		0.921104	0.995675	0.824351	0.980632	0.925976	0.923616	0.923937	0.816389	0.816396	0.816953		0.996010	0.971624	0.824351	0.188905	0.0987220	0.100135
Mass Volume	ft^3/lb	0.830606	16.8845	0.285202	7.88349	0.850148	0.840618	0.845993	0.276115	0.276644	0.278370		17.5382	3.85081	0.285202	0.303851	0.0249998	0.0248285
Mass Density	lb/ft^3	1.20394	0.0592261	3.50628	0.126847	1.17627	1.18960	1.18204	3.62168	3.61475	3.59234		0.0570184	0.259686	3.50628	3.29109	40.0004	40.2763
Gross Liquid Heating Value	Btu/lb	22654.9	21870.3	22690.7	21328.7	22644.6	22649.7	22650.8	22664.8	22665.0	22665.2		22835.6	21857.2	22690.7	20767.5	20767.5	20737.8
Net Ideal Gas Heating Value	Btu/ft^3	1185.10	1098.29	1187.14	2279.66	1185.00	1185.05	1184.93	1185.82	1185.83	1185.84		1128.54	1678.61	1187.14	3990.93	3990.93	4116.39

Names	Units	726	To Btex	173	370
Temperature	°F	170.69	213.64	180*	189.66
Pressure	psig	42	1	30	30
Mass Flow	lb/h	222.98	113.09	209.8	99.637
Nitrogen(Mass Flow)	ton/yr	4.6477	0.0071052	4.3882	7.2988e-007
CO2(Mass Flow)	ton/yr	5.033	0.20718	4.7519	0.00051178
Methane(Mass Flow)	ton/yr	458.38	2.4991	432.78	0.00049144
Ethane(Mass Flow)	ton/yr	205.61	3.5287	194.13	0.00066827
Propane(Mass Flow)	ton/yr	122.56	3.6784	115.71	0.00048177
i-Butane(Mass Flow)	ton/yr	18.963	0.73382	17.904	4.0799e-005
n-Butane(Mass Flow)	ton/yr	52.651	2.8943	49.711	0.00040834
i-Pentane(Mass Flow)	ton/yr	17.496	1.6435	16.519	0.00011965
n-Pentane(Mass Flow)	ton/yr	23.649	2.6578	22.328	0.00025096
Isohexane(Mass Flow)	ton/yr	12.96	2.0396	12.236	0.00010499
n-Hexane(Mass Flow)	ton/yr	10.684	2.0232	10.087	7.8571e-005
n-Heptane(Mass Flow)	ton/yr	5.5374	1.8511	5.2282	1.6925e-005
Water(Mass Flow)	ton/yr	17.149	443.17	0	437.02
Oxygen(Mass Flow)	ton/yr	0	0	0	0
Triethylene Glycol(Mass Flow)	ton/yr	0.15862	0.00064219	0	0.14851

Properties	175	
Temperature(Total)	104.4	°F
Pressure(Total)	788	psig
Std Vapor Volumetric Flow(Total)	40.18	MMSCFD
Analysis	175	
Dew Point Temperature(Total)	101.85	°F
Water Content(Total)	4.1608	lbm/MMSCF
Volumetric Gross Ideal Gas Heating Value(Total)	1307.3	Btu/ft^3

Properties	170	
Temperature	99.339	°F
Pressure	793	psig
Std Vapor Volumetric Flow	40.32	MMSCFD
Analysis	170	
Dew Point Temperature	99.339	°F
Water Content	66.798	lbm/MMSCF
Volumetric Gross Ideal Gas Heating Value	1305.9	Btu/ft^3

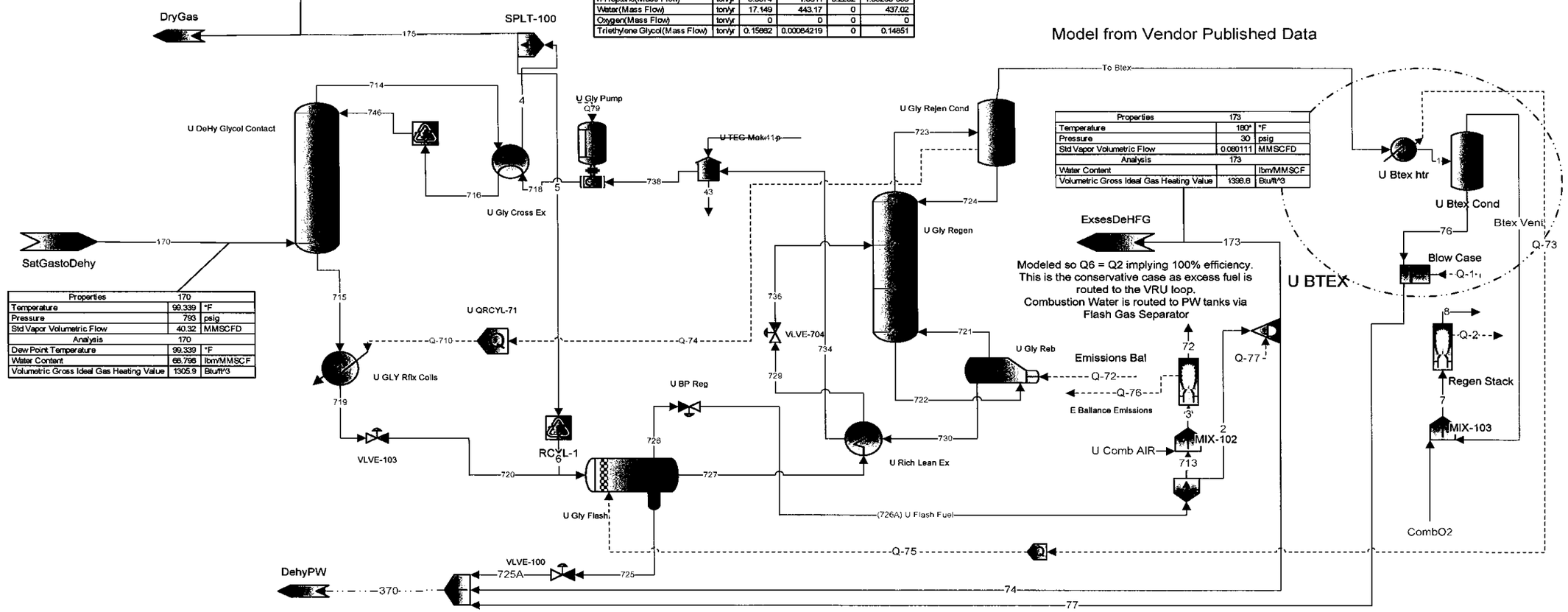

Printed	REVISED	Created	SIZE	FSCM NO	DWG NO	REV
10/29/2015	11/9/2015	11/9/2015	11*17	C:\Users\elmsrd\AppData\Local\Microsoft\Windows\Temporary Internet Files\Content.Outlook\910Y22S7\	Wells Mackey Combined Well pad	Preliminary
DRAWN	RGWSolutions					
ISSUED	Preliminary		SCALE	None	DeHy	SHEET 3 OF 3

Process Streams		212	213A	214	214A	221	221A	225	225A	227	227A	290	301	301A	302	302A	303	303A	304	305	378
Composition	Status:	Solved	Solved	Solved	Solved	Solved	Solved	Solved	Solved	Solved	Solved	Solved	Solved	Solved	Solved	Solved	Solved	Solved	Solved	Solved	Solved
Phase: Total	From Block:	MIX-106	VE212	VLVE-103	CP10XSeparator Dumps	VLVE-102	VE101	VLVE-104	VE111	VLVE-105	VE121	XCHG-101	MIX-103	Marcellus 1 MMBTU/hr. GPU's	Marcellus 1 MMBTU/Hr GPU's	VLVE-112	VLVE-107	VE301	PW Header	TK301-TK306	DehyPW
	To Block:	VE212	VLVE-108	MIX-100	VLVE-103	MIX-100	VLVE-102	MIX-100	VLVE-104	MIX-100	VLVE-105	MIX-106	VLVE-112	MIX-103	MIX-103	VE301	PW Header	VLVE-107	TK301-TK306	Truck Loading 3 Stations	MIX-103
Mass Fraction		%	%	%	%	%	%	%	%	%	%	%	%	%	%	%	%	%	%	%	%
Triethylene Glycol		5.14422E-05	5.58553E-05	0	0	0	0	0	0	0	0	0.00331354	0.000175742	0	0	0.000175742	0.000175816	0.000175816	0.000175816	0.000175824	0.0339623
Oxygen		0	0	0	0	0	0	0	0	0	0	0	0	0	0	0	0	0	0	0	0
Nitrogen		0.00652451	0.000138244	0.000425966	0.000425966	0.00465901	0.00465901	0.000425508	0.000425508	0.000423453	0.000423453	0.00365557	0.000160255	0.000153612	0.000166806	0.000160255	1.36289E-05	1.36289E-05	1.36289E-05	3.49072E-06	1.66905E-07
CO2		0.0305479	0.00536828	0.00698021	0.00698021	0.0213295	0.0213295	0.00698503	0.00698503	0.00697368	0.00697368	0.0345890	0.00347600	0.00325202	0.00367816	0.00347600	0.00272679	0.00272679	0.00272679	0.00256062	0.000117030
Water		2.81013	3.02000	99.8919	99.8919	13.7420	13.7420	99.8920	99.8920	99.8922	99.8922	0.0170280	99.9461	99.9484	99.9444	99.9461	99.9877	99.9877	99.9877	99.9924	99.9378
Methane		1.65966	0.113046	0.0673653	0.0673653	1.27881	1.27881	0.0673141	0.0673141	0.0670594	0.0670594	1.47299	0.0286404	0.0279392	0.0294387	0.0286404	0.00456340	0.00456340	0.00456340	0.00188965	0.000112383
Ethane		3.16140	1.05565	0.0209819	0.0209819	2.64698	2.64698	0.0209858	0.0209858	0.0209543	0.0209543	5.85293	0.0114598	0.0108917	0.0119981	0.0114598	0.00201460	0.00201460	0.00201460	0.000930994	0.000152821
Propane		5.34375	3.64375	0.00807673	0.00807673	4.48971	4.48971	0.00809439	0.00809439	0.00810859	0.00810859	14.6764	0.00576828	0.00530589	0.00617391	0.00576828	0.00103672	0.00103672	0.00103672	0.000534320	0.000110171
i-Butane		1.86503	1.64222	0.000364360	0.000364360	1.56303	1.56303	0.000364974	0.000364974	0.000365701	0.000365701	6.00301	0.000290639	0.000273013	0.000308704	0.000290639	2.08471E-05	2.08471E-05	2.08471E-05	5.47543E-06	9.32993E-06
n-Butane		6.44652	6.03816	0.00199421	0.00199421	5.39408	5.39408	0.00199663	0.00199663	0.00199983	0.00199983	20.9503	0.00158742	0.00151336	0.00165778	0.00158742	0.000234283	0.000234283	0.000234283	0.000100983	9.33808E-05
i-Pentane		4.24434	4.34618	0.000276582	0.000276582	3.61216	3.61216	0.000277258	0.000277258	0.000278369	0.000278369	10.4096	0.000276818	0.000262734	0.000289881	0.000276818	2.81692E-05	2.81692E-05	2.81692E-05	1.00491E-05	2.73615E-05
n-Pentane		6.71035	6.97289	0.000361998	0.000361998	5.75075	5.75075	0.000362568	0.000362568	0.000363848	0.000363848	14.1818	0.000344983	0.000335638	0.000354771	0.000344983	3.57416E-05	3.57416E-05	3.57416E-05	1.22344E-05	5.73953E-05
Isohexane		7.31338	7.80140	7.20855E-05	7.20855E-05	6.40557	6.40557	7.21859E-05	7.21859E-05	7.24343E-05	7.24343E-05	8.53110	7.60506E-05	7.72053E-05	7.56451E-05	7.60506E-05	3.97732E-06	3.97732E-06	3.97732E-06	7.79516E-07	2.40084E-05
n-Hexane		7.36914	7.90083	3.99427E-05	3.99427E-05	6.50718	6.50718	4.00084E-05	4.00084E-05	4.01674E-05	4.01674E-05	6.68275	4.43847E-05	4.57163E-05	4.36087E-05	4.43847E-05	1.84842E-06	1.84842E-06	1.84842E-06	3.03574E-07	1.79678E-05
Benzene		0.111893	0.119930	0.000310787	0.000310787	0.0990789	0.0990789	0.000312091	0.000312091	0.000314040	0.000314040	0.0914770	0.000365488	0.000338833	0.000354557	0.000365488	0.000348716	0.000348716	0.000348716	0.000345732	0.00377708
Cyclohexene		0.960280	1.03342	0.000179478	0.000179478	0.855887	0.855887	0.000179969	0.000179969	0.000180877	0.000180877	0.631385	0.000205457	0.000207556	0.000196734	0.000205457	0.000137255	0.000137255	0.000137255	0.000124650	0.000980735
Heptane, 2-Methyl-		16.8475	18.2623	3.16848E-06	3.16848E-06	15.6099	15.6099	3.17648E-06	3.17648E-06	3.19739E-06	3.19739E-06	2.97835	4.80642E-06	5.69684E-06	4.11122E-06	4.80642E-06	6.21835E-08	6.21835E-08	6.21835E-08	3.78391E-09	6.34229E-06
n-Heptane		7.83405	8.47216	8.98147E-06	8.98147E-06	7.12140	7.12140	9.04425E-06	9.04425E-06	9.14482E-06	9.14482E-06	2.83963	1.53747E-05	1.56181E-05	1.52941E-05	1.53747E-05	5.93810E-07	5.93810E-07	5.93810E-07	1.38437E-07	3.87048E-06
Toluene		0.703223	0.760952	0.000397399	0.000397399	0.642790	0.642790	0.000399124	0.000399124	0.000402062	0.000402062	0.188403	0.000573343	0.000561491	0.000486026	0.000573343	0.000541504	0.000541504	0.000541504	0.000535897	0.0110723
Isooctane		7.97257	8.61833	2.21423E-06	2.21423E-06	7.23137	7.23137	2.21435E-06	2.21435E-06	2.22124E-06	2.22124E-06	3.10596	2.68248E-06	3.05656E-06	2.38226E-06	2.68248E-06	1.73949E-08	1.73949E-08	1.73949E-08	4.28857E-10	4.21766E-06
Octane		5.59898	6.07182	1.69319E-06	1.69319E-06	5.21019	5.21019	1.69860E-06	1.69860E-06	1.71151E-06	1.71151E-06	0.759434	2.76550E-06	3.31478E-06	2.32940E-06	2.76550E-06	8.08702E-08	8.08702E-08	8.08702E-08	1.09661E-08	4.50306E-06
Ethylbenzene		0.303849	0.329559	3.88178E-05	3.88178E-05	0.282953	0.282953	3.90514E-05	3.90514E-05	3.94554E-05	3.94554E-05	0.0305103	7.17777E-05	7.56589E-05	5.75086E-05	7.17777E-05	6.71317E-05	6.71317E-05	6.71317E-05	6.64309E-05	0.00130271
o-Xylene		1.23615	1.34112	0.000175500	0.000175500	1.15229	1.15229	0.000176447	0.000176447	0.000178165	0.000178165	0.0894030	0.000343814	0.000348793	0.000248474	0.000343814	0.000327994	0.000327994	0.000327994	0.000325439	0.0103143
Isononane		3.80973	4.13447	3.87975E-07	3.87975E-07	3.55061	3.55061	3.89574E-07	3.89574E-07	3.93284E-07	3.93284E-07	0.240983	7.77243E-07	9.76034E-07	6.17254E-07	7.77243E-07	2.16060E-08	2.16060E-08	2.16060E-08	3.03441E-09	1.64112E-06
Nonane		2.93634	3.18703	3.49338E-07	3.49338E-07	2.71943	2.71943	3.50823E-07	3.50823E-07	3.54285E-07	3.54285E-07	0.142112	7.35545E-07	9.32573E-07	5.72743E-07	7.35545E-07	3.23473E-08	3.23473E-08	3.23473E-08	6.73977E-09	2.05276E-06
Decane		4.72457	5.12924	8.44433E-08	8.44433E-08	4.10784	4.10784	8.48670E-08	8.48670E-08	8.58771E-08	8.58771E-08	0.0829750	2.43442E-07	3.15040E-07	1.80868E-07	2.43442E-07	6.32235E-09	6.32235E-09	6.32235E-09	8.88650E-10	1.09403E-06
Mass Flow		lb/h	lb/h	lb/h	lb/h	lb/h	lb/h	lb/h	lb/h	lb/h	lb/h	lb/h	lb/h	lb/h	lb/h	lb/h	lb/h	lb/h	lb/h	lb/h	lb/h
Triethylene Glycol		0.00118362	0.00118362	0	0	0	0	0	0	0	0	0.00118362	0.0339071	0	0	0.0339071	0.0339071	0.0339071	0.0339071	0.0339071	0.0339071
Oxygen		0	0	0	0	0	0	0	0	0	0	0	0	0	0	0	0	0	0	0	0
Nitrogen		0.150121	0.00292951	0.000254131	0.000254131	0.00111052	0.00111052	3.39412E-06	3.39412E-06	2.60746E-06	2.60746E-06	0.00130580	0.0309192	0.0127784	0.0181406	0.0309192	0.00262842	0.00262842	0.00262842	0.000673174	1.66634E-07
CO2		0.702869	0.113758	0.00416439	0.00416439	0.00508411	0.00508411	5.57169E-05	5.57169E-05	4.29413E-05	4.29413E-05	0.0123554	0.670649	0.270524	0.400008	0.670649	0.525877	0.525877	0.525877	0.493807	0.000116840
Water		64.6576	63.9962	59.5955	59.5955	3.27555	3.27555	0.796800	0.796800	0.615099	0.615099	0.00608251	19283.3	8314.35	10869.2	19283.3	19283.2	19283.2	19283.2	19283.2	99.7754
Methane		38.1866	2.39555	0.0401901	0.0401901	0.304819	0.304819	0.000536939	0.000536939	0.000412927	0.000412927	0.526161	5.52580	2.32416	3.20152	5.52580	0.880078	0.880078	0.880078	0.364412	0.000112201
Ethane		72.7399	22.3700	0.0125178	0.0125178	0.630936	0.630936	0.000167395	0.000167395	0.000129029	0.000129029	2.09071	2.21101	0.906039	1.30482	2.21101	0.388528	0.388528	0.388528	0.179539	0.000152572
Propane		122.953	77.2140	0.00481857	0.00481857	1.07017	1.07017	6.45658E-05	6.45658E-05	4.99296E-05	4.99296E-05	5.24251	1.11292	0.441378	0.671427	1.11292	0.199937	0.199937	0.199937	0.103042	0.000109992
i-Butane		42.9121	34.8000	0.000217377	0.000217377	0.372566	0.372566	2.91126E-06	2.91126E-06	2.25185E-06	2.25185E-06	2.14432	0.0560750	0.0227110	0.0333547	0.0560750	0.00402049	0.00402049	0.00402049	0.00105592	9.31476E-06
n-Butane		148.326	127.954	0.00118975	0.00118975	1.28573	1.28573	1.59264E-05	1.59264E-05	1.23142E-05	1.23142E-05	7.48358	0.306271	0.125891	0.180287	0.306271	0.0451829	0.0451829	0.0451829	0.0194743	9.32290E-05
i-Pentane		97.6569	92.0991	0.000165009	0.000165009	0.860997	0.860997	2.21158E-06	2.21158E-06	1.71409E-06	1.71409E-06	3.71837	0.0534084	0.0218559	0.0315252	0.0534084	0.00543259	0.00543259	0.00543259	0.00193793	2.73170E-05
n-Pentane		154.397	147.761	0.000215968	0.000215968	1.37075	1.37075	2.89206E-06	2.89206E-06	2.23921E-06	2.23921E-06	5.06585	0.0665599	0.0279205	0.0385821	0.0665599	0.00689297	0.00689297	0.00689297	0.00235936	5.73021E-05
Isohexane		168.272	165.318	4.30062E-05	4.30062E-05	1.52684	1.52684	5.75799E-07	5.75799E-07	4.46023E-07	4.46023E-07	3.04737	0.0146730	0.00642243	0.00822658	0.0146730	0.000767050	0.000767050	0.000767050	0.000150327	2.39694E-05
n-Hexane		169.555	167.425	2.38298E-05	2.38298E-05	1.55106	1.55106	3.19132E-07	3.19132E-07	2.47336E-07	2.47336E-07	2.38713	0.00856346	0.00380298	0.00474254	0.00856346	0.000356478	0.000356478	0.000356478	5.85433E-05	1.79386E-05
Benzene		2.57452	2.54141	0.000185416	0.000185416	0.0236165	0.0236165	2.48943E-06	2.48943E-06	1.93374E-06	1.93374E-06	0.0326762	0.0705161	0.0281863	0.0385588	0.0705161	0.0672519	0.0672519	0.0672519	0.0666732	0.00377094
Cyclohexene		22.0948	21.8990	0.000107077	0.000107077	0.204010	0.204010	1.43555E-06	1.43555E-06	1.11377E-06	1.11377E-06	0.225535	0.0396402	0.0172658	0.0213953	0.0396402	0.0264705	0.0264705	0.0264705	0.0240383	0.000979142
Heptane, 2-Methyl-		387.640	386.993	1.89032E-06	1.89032E-06	3.72077	3.72077	2.53375E-08	2.53375E-08	1.96883E-08	1.96883E-08	1.06389	0.000927336	0.000473899	0.000447104	0.000927336	1.19925E-05	1.19925E-05	1.19925E-05	7.29714E-07	6.33199E-06
n-Heptane		180.252	179.532	5.35834E-06	5.35834E-06	1.69746	1.69746	7.21425E-08	7.21425E-08	5.63103E-08	5.63103E-08	1.01434	0.00296635	0.00129922	0.00166326	0.00296635	0.000114520	0.000114520	0.000114520	2.66971E-05	3.86419E-06
Toluene		16.1803	16.1252	0.000237088	0.000237088	0.153216	0.153216	3.18366E-06	3.18366E-06	2.47574E-06	2.47574E-06	0.0672988	0.110619	0.0467084	0.0528565	0.110619	0.104432	0.104432	0.104432	0.103346	0.0110543
Isooctane		183.439	182.629	1.32101E-06	1.32101E-06	1.72367	1.72367	1.76631E-08	1.76631E-08	1.36775E-08	1.36775E-08	1.10947	0.000517551	0.000254264	0.000259076	0.000517551	3.35471E-06	3.35471E-06	3.35471E-06	8.27037E-08	4.21081E-06
Octane		128.825	128.667	1.01016E-06	1.01016E-06	1.24190	1.24190	1.35491E-08	1.35491E-08	1.05388E-08	1.05388E-08	0.271275	0.000533568	0.000275745	0.000253327	0.000533568	1.55963E-05	1.55963E-05	1.55963E-05	2.11477E-06	4.49574E-06
Ethylbenzene		6.99117	6.98362	2.31587E-05	2.31587E-05	0.0674448	0.0674448	3.11498E-07	3.11498E-07	2.42951E-07	2.42951E-07	0.0108985	0.0138486	0.00629379	0.00625419	0.0138486	0.0129467	0.0129467	0.0129467	0.0128110	0.00130059
o-Xylene		28.4423	28.4194	0.000104703	0.000104703	0.274661	0.274661	1.40745E-06	1.40745E-06	1.09707E-06	1.09707E-06	0.0319354	0.0663346	0.0290148	0.0270221	0.0663346	0.0632556	0.0632556	0.0632556	0.0627599	0.0102976
Isononane		87.6571	87.6128	2.31466E-07	2.31466E-07	0.846324	0.846324	3.10749E-09	3.10749E-09	2.42170E-09	2.42170E-09	0.0860809	0.000149959	8.11928E-05	6.71278E-05	0.000149959	4.16685E-06	4.16685E-06	4.16685E-06	5.85175E-07	1.63846E-06
Nonane		67.5614	67.5358	2.08415E-07	2.08415E-07	0.648205	0.648205	2.79838E-09	2.79838E-09	2.18155E-09	2.18155E-09	0.0507634	0.000141914	7.75773E-05	6.22872E-05	0.000141914	6.23837E-06	6.23837E-06	6.23837E-06	1.29974E-06	2.04942E-06
Decane		108.706	108.693	5.03789E-08	5.03789E-08	0.979147	0.979147	6.76951E-10	6.76951E-10	5.28798E-10	5.28798E-10	0.0296393	4.69690E-05	2.62070E-05	1.96698E-05	4.69690E-05	1.21930E-06	1.21930E-06	1.21930E-06	1.71373E-07	1.09225E-06

Process Streams		212	213A	214	214A	221	221A	225	225A	227	227A	290	301	301A	302	302A	303	303A	304	305	378
Properties	Status:	Solved	Solved	Solved	Solved	Solved	Solved	Solved	Solved	Solved	Solved	Solved	Solved	Solved	Solved	Solved	Solved	Solved	Solved	Solved	Solved
Phase: Total	From Block:	MIX-106	VE212	VLVE-103	CP10XSeparator Dumps	VLVE-102	VE101	VLVE-104	VE111	VLVE-105	VE121	XCHG-101	MIX-103	Marcellus 1 MMBTU/hr. GPU's	Marcellus 1 MMBTU/Hr GPU's	VLVE-112	VLVE-107	VE301	PW Header	TK301-TK306	DehyPW
	To Block:	VE212	VLVE-108	MIX-100	VLVE-103	MIX-100	VLVE-102	MIX-100	VLVE-104	MIX-100	VLVE-105	MIX-106	VLVE-112	MIX-103	MIX-103	VE301	PW Header	VLVE-107	TK301-TK306	Truck Loading 3 Stations	MIX-103
Property	Units																				
Temperature	°F	62.8813	62.8813	101.950	100	72.2580	84.6182	101.637	99.6927	101.270	99.3387	-20	85.5034	90	80	84.2481	85.5282	85.5034	85.5282	60	189.664
Pressure	psig	30	30	45*	800	45*	278	45*	798	45*	793	100	30	280	280	500*	20*	30	20	1	30
Mass Flow	lb/h	2300.87	2119.08	59.6600	59.6600	23.8360	23.8360	0.797662	0.797662	0.615762	0.615762	35.7207	19293.7	8318.64	10875.2	19293.7	19285.6	19285.6	19285.6	19284.7	99.8375
Mass Fraction Vapor	%	7.90095	0	0.0954410	0	5.27276	0	0.0953758	0	0.0950445	0	0	0.0421107	0	0	0	0.00185213	0	0.00185213	0	0
Enthalpy	MMBtu/h	-2.66454	-2.43395	-0.405186	-0.405186	-0.0426312	-0.0426312	-0.00541763	-0.00541763	-0.00418242	-0.00418242	-0.0408353	-131.398	-56.6125	-74.1161	-131.398	-131.384	-131.384	-131.384	-131.868	-0.669624
Mole Fraction Vapor	%	17.6076	0	0.0871349	0	9.28321	0	0.0870556	0	0.0867103	0	0*	0.0362340	0	0	0	0.00159111	0	0.00159111	0	0
Molecular Weight	lb/lbmol	70.5490	78.8603	18.0175	18.0175	53.7950	53.7950	18.0175	18.0175	18.0175	18.0175	58.6112	18.0171	18.0169	18.0171	18.0171	18.0160	18.0160	18.0160	18.0159	18.0247
Molar Flow	lbmol/h	32.6138	26.8713	3.31123	3.31123	0.443090	0.443090	0.0442715	0.0442715	0.0341758	0.0341758	0.609452	1070.86	461.713	603.606	1070.86	1070.47	1070.47	1070.47	1070.43	5.53891
Specific Gravity			0.679384		0.992788		0.676358		0.992849		0.992920	0.636964		0.994905	0.996640	0.996127		0.995920		0.999889	0.968062
Dynamic Viscosity	cP		0.353861		0.703057		0.305499		0.705375		0.708048	0.271216		0.783274	0.880235	0.839466		0.824394		1.13427	0.323098
Kinematic Viscosity	cSt		0.515655		0.708834		0.432409		0.711127		0.713771	0.425620		0.788029	0.884037	0.843526		0.828553		1.13547	0.334073
Thermal Conductivity	Btu/(h*ft*°F)		0.0736083		0.358575		0.0916545		0.358453		0.358316	0.0729261?		0.355269	0.350904	0.352801		0.353927		0.342248	0.386548?
Std Vapor Volumetric Flow	MMSCFD	0.297035	0.244734	0.0301574	0.0301574	0.00403550	0.00403550	0.000403208	0.000403208	0.000311260	0.000311260	0.00555066	9.75297	4.20511	5.49742	9.75297	9.74944	9.74944	9.74944	9.74904	0.0504464
Std Liquid Volumetric Flow	Mbbl/d	0.246297	0.216639	0.00409754	0.00409754	0.00243274	0.00243274	5.47846E-05	5.47846E-05	4.22912E-05	4.22912E-05	0.00427988	1.32365	0.570685	0.746125	1.32365	1.32204	1.32204	1.32204	1.32186	0.00684288
Gross Ideal Gas Heating Value	Btu/ft^3	3788.02	4205.59	51.3727	51.3727	2578.31	2578.31	51.3725	51.3725	51.3697	51.3697	3281.06	50.8349	50.8147	50.8514	50.8349	50.4063	50.4063	50.4063	50.3591	50.7213
CpCv Ratio		1.18298	1.18223	1.42794	1.42372	1.22216	1.24632	1.42762	1.42342	1.42726	1.42309	1.26895	1.41186	1.41553	1.40597	1.40930	1.41195	1.41190	1.41195	1.38820	1.52815
Compressibility		0.183301	0.0148337	0.00374096	0.0394701	0.101895	0.0639029	0.00374157	0.0393924	0.00373980	0.0391721	0.0358636	0.00257349	0.0145057	0.0147489	0.0255713	0.00173572	0.00221582	0.00173572	0.000813075	0.00191484
Mass Volume	ft^3/lb	0.325986	0.0236002	0.0209628	0.0161501	0.181127	0.0237058	0.0209546	0.0161491	0.0209310	0.0161479	0.0251719	0.0186969	0.0161157	0.0160877	0.0160959	0.0162466	0.0160993	0.0162466	0.0160354	0.0165626
Mass Density	lb/ft^3	3.06761	42.3725	47.7035	61.9192	5.52097	42.1838	47.7222	61.9230	47.7761	61.9274	39.7268	53.4849	62.0513	62.1595	62.1275	61.5514	62.1146	61.5514	62.3621	60.3771
Gross Liquid Heating Value	Btu/lb	20197.6	20055.2	23.3418	23.3418	17910.5	17910.5	23.3361	23.3361	23.2742	23.2742	21088.0	11.4848	11.0461	11.8467	11.4848	2.10591	2.10591	2.10591	1.07299	8.62224
Net Ideal Gas Heating Value	Btu/ft^3	3502.04	3891.72	1.00637	1.00637	2368.48	2368.48	1.00613	1.00613	1.00349	1.00349	3028.84	0.496806	0.477709	0.512394	0.496806	0.0917359	0.0917359	0.0917359	0.0471338	0.390121

Process Streams		(726A) U Flash Fuel	Btex Vent	CombO2	To Btex	U Comb AIR	1	2	3	4	5	6	7	8	41	43	72	74	76	77
Composition	Status:	Solved	Solved	Solved	Solved	Solved	Solved	Solved	Solved	Solved	Solved	Solved	Solved	Solved	Solved	Solved	Solved	Solved	Solved	Solved
Phase: Total	From Block:	U BP Reg	U Btex Cond	--	U Gly Rejen Cond	--	U Btex htr	SPLT-101	MIX-102	U Gly Cross Ex	SPLT-100	RCYL-1	MIX-103	Regen Stack	--	U TEG Make up	E Balance Emissions	Emissions Bal	U Btex Cond	Blow Case
	To Block:	SPLT-101	MIX-103	MIX-103	U Btex htr	MIX-102	U Btex Cond	Emissions Bal	E Balance Emissions	SPLT-100	RCYL-1	U Gly Flash	Regen Stack	--	U TEG Make up	--	--	MIX-100	Blow Case	MIX-100
Mole Fraction		%	%	%	%	%	%	%	%	%	%	%	%	%	%	%	%	%	%	%
Triethylene Glycol		0.00249749	1.24442E-08	0*	1.68082E-05	0*	1.68082E-05	0.00249749	0.000673793	3.98798E-05	3.98798E-05	3.98797E-05	3.39861E-09	1.50989E-10	99.1730*	91.1617	6.31101E-06	0.109442	1.83046E-05	1.83046E-05
Oxygen		0	0	100*	0	100*	0	0	73.0212	0	0	0	72.6891	3.22934	0*	0	0.683934	0	0	0
Nitrogen		0.397315	0.0121854	0*	0.000996924	0*	0.000996924	0.397315	0.107191	0.456968	0.456968	0.456968	0.00332794	0.00295699	0*	1.40194E-15	0.100397	0	1.11528E-07	1.11528E-07
CO2		0.273864	0.225628	0*	0.0185031	0*	0.0185031	0.273864	0.0738852	0.176975	0.176975	0.176975	0.0616209	41.0057	0*	1.48834E-10	37.1654	0	4.97775E-05	4.97775E-05
Water		2.27953	59.5949	0*	96.6893	0*	96.6893	2.27953	0.614989	0.00876346	0.00876346	0.00876346	16.2759	55.2746	0.827008*	8.83413	61.8051	99.8906	99.9942	99.9942
Methane		68.4243	7.48333	0*	0.612291	0*	0.612291	68.4243	18.4600	74.3665	74.3665	74.3665	2.04376	0.0907977	0*	2.84402E-11	0.172901	0	0.000131133	0.000131133
Ethane		16.3752	5.63741	0*	0.461253	0*	0.461253	16.3752	4.41782	15.6283	15.6283	15.6283	1.53962	0.0684005	0*	5.46999E-10	0.0413783	0	9.51359E-05	9.51359E-05
Propane		6.65575	4.22546	0*	0.345705	0*	0.345705	6.65575	1.79564	5.65369	5.65369	5.65369	1.15401	0.0512689	0*	2.09258E-09	0.0168184	0	4.67686E-05	4.67686E-05
i-Butane		0.781318	0.606593	0*	0.0496248	0*	0.0496248	0.781318	0.210790	0.665239	0.665239	0.665239	0.165666	0.00735999	0*	6.37780E-10	0.00197431	0	3.00481E-06	3.00481E-06
n-Butane		2.16931	2.39232	0*	0.195730	0*	0.195730	2.16931	0.585254	1.64785	1.64785	1.64785	0.653362	0.0290267	0*	6.39495E-09	0.00548162	0	3.00744E-05	3.00744E-05
i-Pentane		0.580728	1.09443	0*	0.0895361	0*	0.0895361	0.580728	0.156673	0.385993	0.385993	0.385993	0.298899	0.0132791	0*	1.41637E-08	0.00146744	0	7.09893E-06	7.09893E-06
n-Pentane		0.784940	1.76977	0*	0.144789	0*	0.144789	0.784940	0.211767	0.473791	0.473791	0.473791	0.483341	0.0214732	0*	3.54870E-08	0.00198346	0	1.48912E-05	1.48912E-05
Isohexane		0.360148	1.13716	0*	0.0930292	0*	0.0930292	0.360148	0.0971635	0.196440	0.196440	0.196440	0.310567	0.0137975	0*	5.70455E-08	0.000910056	0	5.21509E-06	5.21509E-06
n-Hexane		0.296894	1.12803	0*	0.0922814	0*	0.0922814	0.296894	0.0800982	0.148875	0.148875	0.148875	0.308074	0.0136867	0*	8.72558E-08	0.000750219	0	3.90295E-06	3.90295E-06
Benzene		0.0275097	1.37606	0*	0.113399	0*	0.113399	0.0275097	0.00742178	0.00228165	0.00228165	0.00228165	0.375813	0.0166962	0*	8.05305E-05	6.95141E-05	0	0.000905150	0.000905150
Cyclohexene		0.0879418	2.09016	0*	0.171189	0*	0.171189	0.0879418	0.0237256	0.0144486	0.0144486	0.0144486	0.570840	0.0253605	0*	4.35409E-05	0.000222219	0	0.000223491	0.000223491
Heptane, 2-Methyl-		0.122538	1.03716	0*	0.0848450	0*	0.0848450	0.122538	0.0330593	0.0473523	0.0473523	0.0473523	0.283256	0.0125842	0*	6.50289E-07	0.000309642	0	1.03933E-06	1.03933E-06
n-Heptane		0.132338	0.887605	0*	0.0726107	0*	0.0726107	0.132338	0.0357032	0.0520344	0.0520344	0.0520344	0.242413	0.0107696	0*	2.65405E-07	0.000334404	0	7.23053E-07	7.23053E-07
Toluene		0.0475607	3.93898	0*	0.324292	0*	0.324292	0.0475607	0.0128313	0.00374694	0.00374694	0.00374694	1.07577	0.0477930	0*	0.000751737	0.000120181	0	0.00224947	0.00224947
Isooctane		0.119122	0.745478	0*	0.0609841	0*	0.0609841	0.119122	0.0321377	0.0500913	0.0500913	0.0500913	0.203596	0.00904512	0*	1.83498E-07	0.000301009	0	6.91160E-07	6.91160E-07
Octane		0.0348194	0.389916	0*	0.0318975	0*	0.0318975	0.0348194	0.00939385	0.0120593	0.0120593	0.0120593	0.106489	0.00473097	0*	5.18230E-07	8.79851E-05	0	7.37929E-07	7.37929E-07
Ethylbenzene		0.00595473	0.677040	0*	0.0555958	0*	0.0555958	0.00595473	0.00160651	0.000521149	0.000521149	0.000521149	0.184905	0.00821474	0*	0.000290537	1.50470E-05	0	0.000229693	0.000229693
o-Xylene		0.0201203	3.15438	0*	0.259712	0*	0.259712	0.0201203	0.00542820	0.00152551	0.00152551	0.00152551	0.861489	0.0382731	0*	0.00296430	5.08417E-05	0	0.00181862	0.00181862
Isononane		0.0102541	0.155407	0*	0.0127132	0*	0.0127132	0.0102541	0.00276644	0.00339916	0.00339916	0.00339916	0.0424431	0.00188561	0*	4.38828E-07	2.59111E-05	0	2.39523E-07	2.39523E-07
Nonane		0.00650740	0.126321	0*	0.0103339	0*	0.0103339	0.00650740	0.00175561	0.00200405	0.00200405	0.00200405	0.0344993	0.00153269	0*	7.23081E-07	1.64435E-05	0	2.99602E-07	2.99602E-07
Decane		0.00350760	0.114300	0*	0.00935039	0*	0.00935039	0.00350760	0.000946307	0.00105423	0.00105423	0.00105423	0.0312164	0.00138684	0*	2.60352E-06	8.86333E-06	0	1.43934E-07	1.43934E-07
Mass Flow		lb/h	lb/h	lb/h	lb/h	lb/h	lb/h	lb/h	lb/h	lb/h	lb/h	lb/h	lb/h	lb/h	lb/h	lb/h	lb/h	lb/h	lb/h	lb/h
Triethylene Glycol		0.0357572	8.87998E-09	0*	0.000146619	0*	0.000146619	0.0337605	0.00199685	0.264699	0.000485906	0.000485909	8.87998E-09	4.43999E-10	0.311648*	0	1.99669E-05	0.0337605	0.000146610	0.000146610
Oxygen		0	0	40.4689*	0	46.1071*	0	0	46.1071	0	0	0	40.4689	2.02345	0*	0	0.461071	0	0	0
Nitrogen		1.06113	0.00162204	0*	0.00162220	0*	0.00162220	1.00188	0.0592526	565.795	1.03863	1.03864	0.00162204	0.00162204	0*	0	0.0592526	0	1.66634E-07	1.66634E-07
CO2		1.14908	0.0471838	0*	0.0473006	0*	0.0473006	1.08491	0.0641636	344.242	0.631924	0.631929	0.0471838	35.3375	0*	0	34.4592	0	0.000116840	0.000116840
Water		3.91520	5.10157	0*	101.180	0*	101.180	3.69658	0.218622	6.97788	0.0128093	0.0128094	5.10157	19.4989	0.000311767*	0	23.4577	3.69658	96.0789	96.0789
Methane		104.652	0.570453	0*	0.570565	0*	0.570565	98.8086	5.84370	52729.7	96.7956	96.7965	0.570453	0.0285227	0*	0	0.0584370	0	0.000112201	0.000112201
Ethane		46.9433	0.805477	0*	0.805629	0*	0.805629	44.3220	2.62128	20770.1	38.1276	38.1280	0.805477	0.0402738	0*	0	0.0262128	0	0.000152572	0.000152572
Propane		27.9808	0.885368	0*	0.885478	0*	0.885478	26.4184	1.56243	11018.8	20.2272	20.2273	0.885368	0.0442684	0*	0	0.0156243	0	0.000109992	0.000109992
i-Butane		4.32950	0.167530	0*	0.167540	0*	0.167540	4.08774	0.241756	1708.94	3.13709	3.13712	0.167530	0.00837652	0*	0	0.00241756	0	9.31476E-06	9.31476E-06
n-Butane		12.0208	0.660716	0*	0.660809	0*	0.660809	11.3495	0.671230	4233.19	7.77084	7.77091	0.660716	0.0330358	0*	0	0.00671230	0	9.32290E-05	9.32290E-05
i-Pentane		3.99456	0.375208	0*	0.375236	0*	0.375236	3.77151	0.223053	1230.88	2.25952	2.25954	0.375208	0.0187604	0*	0	0.00223053	0	2.73170E-05	2.73170E-05
n-Pentane		5.39924	0.606738	0*	0.606795	0*	0.606795	5.09775	0.301490	1510.86	2.77347	2.77349	0.606738	0.0303369	0*	0	0.00301490	0	5.73021E-05	5.73021E-05
Isohexane		2.95891	0.465647	0*	0.465671	0*	0.465671	2.79369	0.165223	748.205	1.37348	1.37349	0.465647	0.0232824	0*	0	0.00165223	0	2.39694E-05	2.39694E-05
n-Hexane		2.43922	0.461910	0*	0.461928	0*	0.461928	2.30302	0.136204	567.038	1.04091	1.04092	0.461910	0.0230955	0*	0	0.00136204	0	1.79386E-05	1.79386E-05
Benzene		0.204866	0.510749	0*	0.514520	0*	0.514520	0.193427	0.0114396	7.87721	0.0144602	0.0144603	0.510749	0.0255375	0*	0	0.000114396	0	0.00377094	0.00377094
Cyclohexene		0.688710	0.815843	0*	0.816822	0*	0.816822	0.650253	0.0384570	52.4574	0.0962958	0.0962967	0.815843	0.0407922	0*	0	0.000384570	0	0.000979142	0.000979142
Heptane, 2-Methyl-		1.33449	0.562954	0*	0.562960	0*	0.562960	1.25997	0.0745167	239.069	0.438857	0.438861	0.562954	0.0281477	0*	0	0.000745167	0	6.33199E-06	6.33199E-06
n-Heptane		1.26424	0.422620	0*	0.422624	0*	0.422624	1.19364	0.0705941	230.449	0.423033	0.423037	0.422620	0.0211310	0*	0	0.000705941	0	3.86419E-06	3.86419E-06
Toluene		0.417788	1.72456	0*	1.73562	0*	1.73562	0.394459	0.0233290	15.2589	0.0280107	0.0280110	1.72456	0.0862281	0*	0	0.000233290	0	0.0110543	0.0110543
Isooctane		1.29728	0.404635	0*	0.404639	0*	0.404639	1.22484	0.0724392	252.897	0.464242	0.464246	0.404635	0.0202317	0*	0	0.000724392	0	4.21081E-06	4.21081E-06
Octane		0.379196	0.211641	0*	0.211645	0*	0.211645	0.358022	0.0211740	60.8843	0.111765	0.111766	0.211641	0.0105820	0*	0	0.000211741	0	4.49574E-06	4.49574E-06
Ethylbenzene		0.0602713	0.341546	0*	0.342847	0*	0.342847	0.0569058	0.00336551	2.44540	0.00448901	0.00448905	0.341546	0.0170773	0*	0	3.36551E-05	0	0.00130059	0.00130059
o-Xylene		0.203649	1.59129	0*	1.60159	0*	1.60159	0.192277	0.0113716	7.15818	0.0131402	0.0131403	1.59129	0.0795645	0*	0	0.000113716	0	0.0102976	0.0102976
Isononane		0.125384	0.0947109	0*	0.0947125	0*	0.0947125	0.118382	0.00700133	19.2687	0.0353715	0.0353718	0.0947109	0.00473554	0*	0	7.00133E-05	0	1.63846E-06	1.63846E-06
Nonane		0.0795700	0.0769845	0*	0.0769866	0*	0.0769866	0.0751269	0.00444313	11.3603	0.0208540	0.0208542	0.0769845	0.00384923	0*	0	4.44313E-05	0	2.04942E-06	2.04942E-06
Decane		0.0475802	0.0772769	0*	0.0772780	0*	0.0772780	0.0449234	0.00265684	6.62964	0.0121700	0.0121701	0.0772769	0.00386385	0*	0	2.65684E-05	0	1.09225E-06	1.09225E-06

Process Streams		(726A) U Flash Fuel	Btex Vent	CombO2	To Btex	U Comb AIR	1	2	3	4	5	6	7	8	41	43	72	74	76	77
Properties	Status:	Solved	Solved	Solved	Solved	Solved	Solved	Solved	Solved	Solved	Solved	Solved	Solved	Solved	Solved	Solved	Solved	Solved	Solved	Solved
Phase: Total	From Block:	U BP Reg	U Btex Cond	--	U Gly Rejen Cond	--	U Btex htr	SPLT-101	MIX-102	U Gly Cross Ex	SPLT-100	RCYL-1	MIX-103	Regen Stack	--	U TEG Make up	E Balance Emissions	Emissions Bal	U Btex Cond	Blow Case
	To Block:	SPLT-101	MIX-103	MIX-103	U Btex htr	MIX-102	U Btex Cond	Emissions Bal	E Balance Emissions	SPLT-100	RCYL-1	U Gly Flash	Regen Stack	--	U TEG Make up	--	--	MIX-100	Blow Case	MIX-100
Property	**Units**																			
Temperature	°F	169.872	190	53*	213.642	250*	190*	169.872	218.153	104.397	104.397	104.398	130.771	600*	100*		600*	180*	190	190.038
Pressure	psig	30*	1	0*	1	1*	1	30	1	788	788	788	0	0*	15*	1	1	30	1	30*
Mass Flow	lb/h	222.983	16.9842	40.4689	113.091	46.1071	113.091	210.532	58.5583	96340.8	176.852	176.854	57.4532	57.4532	0.311960	0	58.5583	3.73034	96.1071	96.1071
Mass Fraction Vapor	%	100	100	100	100	100	15.0182	100	100	100	100	100	99.5373	100	0		100	0	0	0
Enthalpy	MMBtu/h	-0.343521	-0.0350317	-0.000217976	-0.583556	0.00175219	-0.679747	-0.324339	-0.0174297	-154.827	-0.284215	-0.284217	-0.0352497	-0.239320	-0.000715682	0	-0.258109	-0.0249194	-0.644716	-0.644705
Mole Fraction Vapor	%	100	100	100	100	100	8.18045	100	100	100	100	100	99.1519	100	0		100	0	0	0
Molecular Weight	lb/lbmol	23.3886	35.7431	31.9988	19.4694	31.9988	19.4694	23.3886	29.6759	21.7973	21.7973	21.7973	33.0214	29.3406	149.080	138.496	27.7951	18.1599	18.0195	18.0195
Molar Flow	lbmol/h	9.53383	0.475175	1.26470*	5.80867	1.44090*	5.80867	9.00147	1.97326	4419.84	8.11348	8.11356	1.73988	1.95814	0.00209257	0	2.10678	0.205416	5.33350	5.33350
Specific Gravity		0.807544	1.23411	1.10483	0.672226	1.10483		0.807544	1.02463	0.752603	0.752603	0.752603		1.01305	1.11372		0.959690	0.972590	0.967864	0.967884
Dynamic Viscosity	cP	0.0119367	0.0114408	0.0197627	0.0126459	0.0252897		0.0119367	0.0208890	0.0126364	0.0126364	0.0126364		0.0254322	21.1362		0.0248975	0.351397	0.322032	0.322102
Kinematic Viscosity	cSt	4.77603	8.78704	14.4200	18.4992	23.9389		4.77603	20.3542	0.224986	0.224986	0.224986		41.8284	18.9959		40.4617	0.361642	0.333039	0.333104
Thermal Conductivity	Btu/(h*ft*°F)	0.0204400	0.0134509	0.0143567	0.0153910	0.0189540		0.0204400	0.0194505	0.0214439	0.0214439	0.0214439		0.0246796	0.112147		0.0248474	0.381363	0.3867397	0.3867477
Std Vapor Volumetric Flow	MMSCFD	0.0868306	0.00432772	0.0115184	0.0529032	0.0131232	0.0529032	0.0819820	0.0179717	40.2543	0.0738946	0.0738953	0.0158462	0.0178340	1.90583E-05	0	0.0191878	0.00187085	0.0485755	0.0485755
Std Liquid Volumetric Flow	Mbbl/d	0.0412833	0.00163467	0.00242814	0.00822214	0.00276643	0.00822214	0.0389781	0.00507166	18.8425	0.0345892*	0.0345895	0.00406281	0.00448595	1.89310E-05	0	0.00455352	0.000255411	0.00658747	0.00658747
Gross Ideal Gas Heating Value	Btu/ft^3	1365.95	1361.86	0	157.835	0	157.835	1365.95	368.516	1307.30	1307.30	1307.30	371.936	43.9687	4089.11	3763.06	34.5428	54.7670	50.5655	50.5655
CpCv Ratio		1.20959	1.15770	1.40000	1.30009	1.38862	1.49472	1.20959	1.30550	1.52736	1.52736	1.52736	1.28753	1.25615	1.07060		1.26315	1.51267	1.52889	1.52876
Compressibility		0.991717	0.989991	0.999012	0.991023	0.999959	0.0816027	0.991717	0.999464	0.824351	0.824351	0.824352	0.988682	0.998945	0.0106115		0.998690	0.00194923	0.000672034	0.00191354
Mass Volume	ft^3/lb	6.40921	12.3029	11.6880	23.4328	15.1629	1.86175	6.40921	15.6083	0.285202	0.285202	0.285203	12.9120	26.3456	0.0143964		26.0321	0.0164855	0.0165660	0.0165656
Mass Density	lb/ft^3	0.156025	0.0812815	0.0855576	0.0426753	0.0659506	0.537129	0.156025	0.0640684	3.50628	3.50628	3.50628	0.0774476	0.0379569	69.4616		0.0384141	60.6595	60.3647	60.3660
Gross Liquid Heating Value	Btu/lb	22065.5	14030.2	0	2111.66	0	2111.66	22065.5	4691.77	22690.7	22690.7	22690.7	4147.59	161.374	10144.1	10037.8	2.89984	91.8986	5.38992	5.38992
Net Ideal Gas Heating Value	Btu/ft^3	1241.73	1242.85	0	101.897	0	101.897	1241.73	335.004	1187.14	1187.14	1187.14	339.433	15.0799	3739.83	3437.92	3.13772	4.12706	0.246195	0.246195

Process Streams		(726A) U Flash Fuel	Btex Vent	CombO2	77	170	173	175	370	713	714	715	716	718	719	720	721	722	723
Composition	Status:	Solved	Solved	Solved	Solved	Solved	Solved	Solved	Solved	Solved	Solved	Solved	Solved	Solved	Solved	Solved	Solved	Solved	Solved
Phase: Total	From Block:	U BP Reg	U Btex Cond	--	Blow Case	SatGastoDehy	Emissions Bal	SPLT-100	MIX-100	SPLT-101	U DeHy Glycol Contact	U DeHy Glycol Contact	U Gly Cross Ex	U Gly Pump	U GLY Rflx Coils	VLVE-103	U Gly Reb	U Gly Regen	U Gly Regen
	To Block:	SPLT-101	MIX-103	MIX-103	MIX-100	U DeHy Glycol Contact	ExsesDeHFG	DryGas	DehyPW	MIX-102	U Gly Cross Ex	U GLY Rflx Coils	RCYL-2	U Gly Cross Ex	VLVE-103	U Gly Flash	U Gly Regen	U Gly Reb	U Gly Rejen Cond
Mole Fraction		%	%	%	%	%	%	%	%	%	%	%	%	%	%	%	%	%	%
Triethylene Glycol		0.00249749	1.24442E-08	0*	1.83046E-05	0	0	3.98798E-05	0.00407638	0.00249749	3.98798E-05	69.2337	91.1617	91.1617	69.2337	69.2337	6.38362	77.3941	0.00277830
Oxygen		0	0	100*	0	0	0	0	0	0	0	0	0	0	0	0	0	0	0
Nitrogen		0.397315	0.0121854	0*	1.11528E-07	0.456242	0.406594	0.456968	1.07392E-07	0.397315	0.456968	0.00286450	1.40194E-15	1.40194E-15	0.00286450	0.00286450	3.60985E-12	5.87376E-13	0.000664619
CO2		0.273864	0.225628	0*	4.97775E-05	0.176975	0.280260	0.176975	4.79314E-05	0.273864	0.176975	0.0426771	1.48834E-10	1.48834E-10	0.0426771	0.0426771	5.92302E-08	9.74303E-09	0.0123366
Water		2.27953	59.5949	0*	99.9942	0.140505	0	0.00876346	99.9903	2.27953	0.00876346	26.1189	8.83413	8.83413	26.1189	26.1189	93.5446	22.5908	97.7900
Methane		68.4243	7.48333	0*	0.000131133	74.2570	70.0223	74.3665	0.000126270	68.4243	74.3665	1.74778	2.84402E-11	2.84402E-11	1.74778	1.74778	3.39100E-08	5.53045E-09	0.408197
Ethane		16.3752	5.63741	0*	9.51359E-05	15.6101	16.7576	15.6283	9.16077E-05	16.3752	15.6283	1.06467	5.46999E-10	5.46999E-10	1.06467	1.06467	3.14635E-07	5.15517E-08	0.307504
Propane		6.65575	4.22546	0*	4.67686E-05	5.64889	6.81119	5.65369	4.50342E-05	6.65575	5.65369	0.651900	2.09258E-09	2.09258E-09	0.651900	0.651900	8.35536E-07	1.37435E-07	0.230471
i-Butane		0.781318	0.606593	0*	3.00481E-06	0.664682	0.799565	0.665239	2.89338E-06	0.781318	0.665239	0.0778551	6.37780E-10	6.37780E-10	0.0778551	0.0778551	2.12762E-07	3.50845E-08	0.0330833
n-Butane		2.16931	2.39232	0*	3.00744E-05	1.64707	2.21997	1.64785	2.89591E-05	2.16931	1.64785	0.281135	6.39495E-09	6.39495E-09	0.281135	0.281135	1.75334E-06	2.90081E-07	0.130487
i-Pentane		0.580728	1.09443	0*	7.09893E-06	0.386023	0.594290	0.385993	6.83566E-06	0.580728	0.385993	0.0973250	1.41637E-08	1.41637E-08	0.0973250	0.0973250	2.68675E-06	4.48164E-07	0.0596909
n-Pentane		0.784940	1.76977	0*	1.48912E-05	0.474030	0.803271	0.473791	1.43389E-05	0.784940	0.473791	0.149084	3.54870E-08	3.54870E-08	0.149084	0.149084	6.17648E-06	1.03272E-06	0.0965265
Isohexane		0.360148	1.13716	0*	5.21509E-06	0.196657	0.368559	0.196440	5.02168E-06	0.360148	0.196440	0.0791989	5.70455E-08	5.70455E-08	0.0791989	0.0791989	8.09780E-06	1.36278E-06	0.0620196
n-Hexane		0.296894	1.12803	0*	3.90295E-06	0.149120	0.303827	0.148875	3.75821E-06	0.296894	0.148875	0.0718293	8.72558E-08	8.72558E-08	0.0718293	0.0718293	1.12603E-05	1.90165E-06	0.0615210
Benzene		0.0275097	1.37606	0*	0.000905150	0.00248173	0.0281521	0.00228165	0.000871582	0.0275097	0.00228165	0.0300903	8.05305E-05	8.05305E-05	0.0300903	0.0300903	0.00241172	0.000459097	0.0756199
Cyclohexene		0.0879418	2.09016	0*	0.000223491	0.0148125	0.0899955	0.0144486	0.000215202	0.0879418	0.0144486	0.0571187	4.35409E-05	4.35409E-05	0.0571187	0.0571187	0.00150237	0.000280442	0.114132
Heptane, 2-Methyl-		0.122538	1.03716	0*	1.03933E-06	0.0475634	0.125400	0.0473523	1.00078E-06	0.122538	0.0473523	0.0424893	8.50289E-07	8.50289E-07	0.0424893	0.0424893	5.24292E-05	9.05869E-06	0.0565634
n-Heptane		0.132338	0.887605	0*	7.23053E-07	0.0522344	0.135429	0.0520344	6.96238E-07	0.132338	0.0520344	0.0419691	2.65405E-07	2.65405E-07	0.0419691	0.0419691	2.48178E-05	4.25248E-06	0.0484072
Toluene		0.0475607	3.93898	0*	0.00224947	0.00426149	0.0486714	0.00374694	0.00216604	0.0475607	0.00374694	0.0773276	0.000751737	0.000751737	0.0773276	0.0773276	0.0172231	0.00342658	0.216247
Isooctane		0.119122	0.745478	0*	6.91160E-07	0.0502543	0.121904	0.0500913	6.65528E-07	0.119122	0.0500913	0.0360538	1.83498E-07	1.83498E-07	0.0360538	0.0360538	1.86452E-05	3.18149E-06	0.0406561
Octane		0.0348194	0.389916	0*	7.37929E-07	0.0121344	0.0356326	0.0120593	7.10563E-07	0.0348194	0.0120593	0.0139559	5.18230E-07	5.18230E-07	0.0139559	0.0139559	3.56791E-05	6.22802E-06	0.0212650
Ethylbenzene		0.00595473	0.677040	0*	0.000229693	0.000604971	0.00609379	0.000521149	0.000221175	0.00595473	0.000521149	0.0127148	0.000290537	0.000290537	0.0127148	0.0127148	0.00537743	0.00111662	0.0370690
o-Xylene		0.0201203	3.15438	0*	0.00181862	0.00190304	0.0205901	0.00152551	0.00175117	0.0201203	0.00152551	0.0584205	0.00296430	0.00296430	0.0584205	0.0584205	0.0449930	0.00978955	0.173183
Isononane		0.0102541	0.155407	0*	2.39523E-07	0.00342614	0.0104936	0.00339916	2.30640E-07	0.0102541	0.00339916	0.00479288	4.38828E-07	4.38828E-07	0.00479288	0.00479288	2.55567E-05	4.51773E-06	0.00847549
Nonane		0.00650740	0.126321	0*	2.99602E-07	0.00202468	0.00665937	0.00200405	2.88491E-07	0.00650740	0.00200405	0.00352125	7.23081E-07	7.23081E-07	0.00352125	0.00352125	3.61117E-05	6.46988E-06	0.00688926
Decane		0.00350760	0.114300	0*	1.43934E-07	0.00107039	0.00358952	0.00105423	1.38596E-07	0.00350760	0.00105423	0.00263737	2.60352E-06	2.60352E-06	0.00263737	0.00263737	9.45216E-05	1.75302E-05	0.00623360
Mass Flow		lb/h	lb/h	lb/h	lb/h	lb/h	lb/h	lb/h	lb/h	lb/h	lb/h	lb/h	lb/h	lb/h	lb/h	lb/h	lb/h	lb/h	lb/h
Triethylene Glycol		0.0357572	8.87998E-09	0*	0.000146610	0	0	0.264213	0.0339071	0.00199665	0.264699	3124.59	3124.86	3124.86	3124.59	3124.59	42.4191	3166.97	0.0363530
Oxygen		0	0	40.4689*	0	0	0	0	0	0	0	0	0	0	0	0	0	0	0
Nitrogen		1.06113	0.00162204	0*	1.66634E-07	565.819	1.00188	564.756	1.66634E-07	0.0592526	565.795	0.0241155	8.96442E-15	8.96442E-15	0.0241155	0.0241155	4.47463E-12	4.48360E-12	0.00162221
CO2		1.14908	0.0471838	0*	0.000116840	344.807	1.08491	343.610	0.000116840	0.0641636	344.242	0.564449	1.49512E-09	1.49512E-09	0.564449	0.564449	1.15343E-07	1.16838E-07	0.0473054
Water		3.91520	5.10157	0*	96.0789	112.060	0	6.96508	99.7754	0.218622	6.97788	141.410	36.3271	36.3271	141.410	141.410	74.5696	110.896	153.498
Methane		104.652	0.570453	0*	0.000112201	52738.1	98.8086	52632.9	0.000112201	5.84370	52729.7	8.42639	1.04143E-10	1.04143E-10	8.42639	8.42639	2.40714E-08	2.41755E-08	0.570570
Ethane		46.9433	0.805477	0*	0.000152572	20779.8	44.3220	20732.0	0.000152572	2.62128	20770.1	9.62091	3.75433E-09	3.75433E-09	9.62091	9.62091	4.18629E-07	4.22383E-07	0.805636
Propane		27.9808	0.885368	0*	0.000109992	11027.4	26.4184	10998.6	0.000109992	1.56243	11018.8	8.63893	2.10622E-08	2.10622E-08	8.63893	8.63893	1.63028E-06	1.65134E-06	0.885482
i-Butane		4.32950	0.167530	0*	9.31476E-06	1710.30	4.08774	1705.80	9.31476E-06	0.241756	1708.94	1.35992	8.46135E-09	8.46135E-09	1.35992	1.35992	5.47190E-07	5.55651E-07	0.167540
n-Butane		12.0208	0.660716	0*	9.32290E-05	4238.10	11.3495	4225.42	9.32290E-05	0.671230	4233.19	4.91066	8.48410E-08	8.48410E-08	4.91066	4.91066	4.50932E-06	4.59416E-06	0.660813
i-Pentane		3.99456	0.375208	0*	2.73170E-05	1232.99	3.77151	1228.62	2.73170E-05	0.223053	1230.88	2.11026	2.33256E-07	2.33256E-07	2.11026	2.11026	8.57745E-06	8.81071E-06	0.375237
n-Pentane		5.39924	0.606738	0*	5.73021E-05	1514.09	5.09775	1508.08	5.73021E-05	0.301490	1510.86	3.23255	5.84419E-07	5.84419E-07	3.23255	3.23255	1.97184E-05	2.03029E-05	0.606797
Isohexane		2.95891	0.465647	0*	2.39694E-05	750.257	2.79369	746.832	2.39694E-05	0.165223	748.205	2.05109	1.12210E-06	1.12210E-06	2.05109	2.05109	3.08782E-05	3.20003E-05	0.465672
n-Hexane		2.43922	0.461910	0*	1.79386E-05	568.898	2.30302	565.997	1.79386E-05	0.136204	567.038	1.86024	1.71634E-06	1.71634E-06	1.86024	1.86024	4.29375E-05	4.46539E-05	0.461929
Benzene		0.204866	0.510749	0*	0.00377094	8.58199	0.193427	7.86275	0.00377094	0.0114396	7.87721	0.706362	0.00143583	0.00143583	0.706362	0.706362	0.00833577	0.00977160	0.514661
Cyclohexene		0.688710	0.815843	0*	0.000979142	53.8666	0.650253	52.3611	0.000979142	0.0384570	52.4574	1.41005	0.000816391	0.000816391	1.41005	1.41005	0.00546075	0.00627714	0.816863
Heptane, 2-Methyl-		1.33449	0.562954	0*	6.33199E-06	240.527	1.25997	238.630	6.33199E-06	0.0745167	239.069	1.45860	1.69554E-05	1.69554E-05	1.45860	1.45860	0.000265003	0.000281958	0.562961
n-Heptane		1.26424	0.422620	0*	3.86419E-06	231.712	1.19364	230.025	3.86419E-06	0.0705941	230.449	1.26383	6.07033E-06	6.07033E-06	1.26383	1.26383	0.000110038	0.000116108	0.422624
Toluene		0.417788	1.72456	0*	0.0110543	17.3827	0.394459	15.2309	0.0110543	0.0233290	15.2589	2.14120	0.0158100	0.0158100	2.14120	2.14120	0.0702191	0.0860292	1.73604
Isooctane		1.29728	0.404635	0*	4.21081E-06	254.135	1.22484	252.433	4.21081E-06	0.0724392	252.897	1.23768	4.78447E-06	4.78447E-06	1.23768	1.23768	9.42416E-05	9.90261E-05	0.404639
Octane		0.379196	0.211641	0*	4.49574E-06	61.3634	0.358022	60.7725	4.49574E-06	0.0211740	60.8843	0.479089	1.35121E-05	1.35121E-05	0.479089	0.479089	0.000180339	0.000193852	0.211646
Ethylbenzene		0.0602713	0.341546	0*	0.00130059	2.84337	0.0569058	2.44091	0.00130059	0.00336551	2.44540	0.405670	0.00704060	0.00704060	0.405670	0.405670	0.0252615	0.0323021	0.342894
o-Xylene		0.203649	1.59129	0*	0.0102976	8.94430	0.192277	7.14504	0.0102976	0.0113716	7.15818	1.86393	0.0718341	0.0718341	1.86393	1.86393	0.211363	0.283197	1.60197
Isononane		0.125384	0.0947109	0*	1.63846E-06	19.4534	0.118382	19.2334	1.63846E-06	0.00700133	19.2687	0.184737	1.28468E-05	1.28468E-05	0.184737	0.184737	0.000145038	0.000157885	0.0947126
Nonane		0.0795700	0.0769845	0*	2.04942E-06	11.4960	0.0751269	11.3394	2.04942E-06	0.00444313	11.3603	0.135724	2.11684E-05	2.11684E-05	0.135724	0.135724	0.000204939	0.000226108	0.0769867
Decane		0.0475802	0.0772769	0*	1.09225E-06	6.74232	0.0449234	6.61747	1.09225E-06	0.00265684	6.62964	0.112773	8.45543E-05	8.45543E-05	0.112773	0.112773	0.000595089	0.000679644	0.0772780

Process Streams		(726A) U Flash Fuel	Btex Vent	CombO2	77	170	173	175	370	713	714	715	716	718	719	720	721	722	723
Properties	Status:	Solved	Solved	Solved	Solved	Solved	Solved	Solved	Solved	Solved	Solved	Solved	Solved	Solved	Solved	Solved	Solved	Solved	Solved
Phase: Total	From Block:	U BP Reg	U Btex Cond	--	Blow Case	SatGastoDehy	Emissions Bal	SPLT-100	MIX-100	SPLT-101	U DeHy Glycol Contact	U DeHy Glycol Contact	U Gly Cross Ex	U Gly Pump	U GLY Rflx Coils	VLVE-103	U Gly Reb	U Gly Regen	U Gly Regen
	To Block:	SPLT-101	MIX-103	MIX-103	MIX-100	U DeHy Glycol Contact	ExsesDeHFG	DryGas	DehyPW	MIX-102	U Gly Cross Ex	U GLY Rflx Coils	RCYL-2	U Gly Cross Ex	VLVE-103	U Gly Flash	U Gly Regen	U Gly Reb	U Gly Rejen Cond
Property	**Units**																		
Temperature	°F	169.872	190	53*	190.038	99.3387	180*	104.397	189.664	169.872	101.808	100.998	121.808	212.707	127.713	130.243	400*	324.361	215.248
Pressure	psig	30*	1	0*	30*	793	30	788	30	30	791	793	1097	1100*	790	42*	4	4	1
Mass Flow	lb/h	222.983	16.9842	40.4689	96.1071	96499.7	206.801	96163.9	99.8375	12.4512	96340.8	3320.19	3161.29	3161.29	3320.19	3320.19	117.311	3278.29	165.447
Mass Fraction Vapor	%	100	100	100	0	100	100	100	0	100	100	0	0	0	0.00380907	0.949088	100	0	100
Enthalpy	MMBtu/h	-0.343521	-0.0350317	-0.000217976	-0.644705	-155.816	-0.302010	-154.543	-0.669624	-0.0191819	-154.994	-8.17959	-7.35739	-7.19074	-8.12841	-8.12841	-0.500744	-7.56251	-0.882295
Mole Fraction Vapor	%	100	100	100	0	100	100	100	0	100	100	0	0	0	0.0189590	3.52049	100	0	100
Molecular Weight	lb/lbmol	23.3886	35.7431	31.9988	18.0195	21.7976	23.5107	21.7973	18.0247	23.3886	21.7973	110.479	138.496	138.496	110.479	110.479	26.5116	120.310	18.9884
Molar Flow	lbmol/h	9.53383	0.475175	1.26470*	5.33350	4427.07	8.79605	4411.73	5.53891	0.532362	4419.84	30.0527	22.8258	22.8258	30.0527	30.0527	4.42489	27.2486	8.71301
Specific Gravity		0.807544	1.23411	1.10483	0.967884	0.752613	0.811760	0.752603	0.968062	0.807544	0.752603	1.08529	1.10022	1.04793			0.915375	0.980946	0.655620
Dynamic Viscosity	cP	0.0119367	0.0114408	0.0197627	0.322102	0.0126115	0.0120233	0.0126364	0.323098	0.0119367	0.0126223	13.7219	13.8517	3.60584			0.0159552	1.21573	0.0126740
Kinematic Viscosity	cSt	4.77603	8.78704	14.4200	0.333104	0.219163	4.86472	0.224986	0.334073	4.77603	0.221846	12.6555	12.6019	3.44416			18.3921	1.24052	19.0552
Thermal Conductivity	Btu/(h*ft*°F)	0.0204400	0.0134509	0.0143567	0.386747?	0.0213182	0.0209740	0.0214439	0.3865487	0.0204400	0.0213821	0.115160	0.113863	0.113806?			0.0189218	0.113895?	0.0155154
Std Vapor Volumetric Flow	MMSCFD	0.0868306	0.00432772	0.0115184	0.0485755	40.3201	0.0801112	40.1804	0.0504464	0.00484855	40.2543	0.273709	0.207889	0.207889	0.273709	0.273709	0.0403002	0.248170	0.0793549
Std Liquid Volumetric Flow	Mbbl/d	0.0412833	0.00163467	0.00242814	0.00658747	18.8574	0.0387226	18.8080	0.00684288	0.00230523	18.8425	0.207000	0.192103	0.192103	0.207000	0.207000	0.00770996	0.199794	0.0118103
Gross Ideal Gas Heating Value	Btu/ft^3	1365.95	1361.86	0	50.5655	1305.92	1396.57	1307.30	50.7213	1365.95	1307.30	2968.76	3763.06	3763.06	2968.76	2968.76	313.817	3202.92	122.112
CpCv Ratio		1.20959	1.15770	1.40000	1.52876	1.54569	1.20511	1.52736	1.52815	1.20959	1.53674	1.09619	1.07499	1.07984	1.09802	1.09736	1.18265	1.11349	1.30878
Compressibility		0.991717	0.989991	0.999012	0.00191354	0.816953	0.992130	0.824351	0.00191484	0.991717	0.820558	0.219102	0.359567	0.327352	0.211130	0.0488992	0.992059	0.00436957	0.991023
Mass Volume	ft^3/lb	6.40921	12.3029	11.6880	0.0165656	0.278370	6.48119	0.285202	0.0165626	6.40921	0.281534	0.0147736	0.0145731	0.0153002	0.0149701	0.0494221	18.4650	0.0163450	24.0836
Mass Density	lb/ft^3	0.156025	0.0812815	0.0855576	60.3660	3.59234	0.154293	3.50628	60.3771	0.156025	3.55196	67.6882	68.6194	65.3585	66.8000	20.2339	0.0541565	61.1806	0.0415220
Gross Liquid Heating Value	Btu/lb	22065.5	14030.2	0	5.38992	22665.2	22461.9	22690.7	8.62224	22065.5	22690.7	9901.64	10037.8	10037.8	9901.64	9901.64	3722.36	9811.82	1445.77
Net Ideal Gas Heating Value	Btu/ft^3	1241.73	1242.85	0	0.246195	1185.84	1270.63	1187.14	0.390121	1241.73	1187.14	2704.05	3437.92	3437.92	2704.05	2704.05	244.128	2919.26	68.0411

Process Streams		(726A) U Flash Fuel	Btex Vent	CombO2	720	721	722	723	724	725	725A	726	727	729	730	734	736	738	746
Composition	Status:	Solved	Solved	Solved	Solved	Solved	Solved	Solved	Solved	Solved	Solved	Solved	Solved	Solved	Solved	Solved	Solved	Solved	Solved
Phase: Total	From Block:	U BP Reg	U Btex Cond	–	VLVE-103	U Gly Reb	U Gly Regen	U Gly Regen	U Gly Rejen Cond	U Gly Flash	VLVE-100	U Gly Flash	U Gly Flash	U Rich Lean Ex	U Gly Reb	U Rich Lean Ex	VLVE-704	U TEG Make up	RCYL-2
	To Block:	SPLT-101	MIX-103	MIX-103	U Gly Flash	U Gly Regen	U Gly Reb	U Gly Rejen Cond	U Gly Regen	VLVE-100	MIX-100	U BP Reg	U Rich Lean Ex	VLVE-704	U Rich Lean Ex	U TEG Make up	U Gly Regen	U Gly Pump	U DeHy Glycol Contact
Mole Fraction		%	%	%	%	%	%	%	%	%	%	%	%	%	%	%	%	%	%
Triethylene Glycol		0.00249749	1.24442E-08	0*	69.2337	6.38362	77.3941	0.00277830	0.00830130			0.00249749	72.6671	72.6671	91.1610	91.1610	72.6671	91.1617	91.1613
Oxygen		0	0	100*	0	0	0	0	0			0	0	0	0	0	0	0	0
Nitrogen		0.397315	0.0121854	0*	0.00286450	3.60985E-12	5.87376E-13	0.000664619	9.25409E-09			0.397315	0.000202247	0.000202247	1.40207E-15	1.40207E-15	0.000202247	1.40194E-15	0
CO2		0.273864	0.225628	0*	0.0426771	5.92302E-08	9.74303E-09	0.0123366	3.70855E-06			0.273864	0.00375373	0.00375373	1.48848E-10	1.48848E-10	0.00375373	1.48834E-10	1.65265E-10
Water		2.27953	59.5949	0*	26.1189	93.5446	22.5908	97.7900	99.9913			2.27953	26.6579	26.6579	8.83486	8.83486	26.6579	8.83413	8.83425
Methane		68.4243	7.48333	0*	1.74778	3.39100E-08	5.53045E-09	0.408197	1.06298E-05			68.4243	0.124216	0.124216	2.84428E-11	2.84428E-11	0.124216	2.84402E-11	3.21486E-11
Ethane		16.3752	5.63741	0*	1.06467	3.14835E-07	5.15517E-08	0.307504	7.55951E-06			16.3752	0.0935746	0.0935746	5.47049E-10	5.47049E-10	0.0935746	5.46999E-10	6.17823E-10
Propane		6.65575	4.22546	0*	0.651900	8.35536E-07	1.37435E-07	0.230471	3.51388E-06			6.65575	0.0701333	0.0701333	2.09277E-09	2.09277E-09	0.0701333	2.09258E-09	2.36312E-09
i-Butane		0.781318	0.606593	0*	0.0778551	2.12762E-07	3.50845E-08	0.0330833	2.37703E-07			0.781318	0.0100674	0.0100674	6.37839E-10	6.37839E-10	0.0100674	6.37780E-10	7.21667E-10
n-Butane		2.16931	2.39232	0*	0.281135	1.75334E-06	2.90081E-07	0.130487	2.40790E-06			2.16931	0.0397078	0.0397078	6.39554E-09	6.39554E-09	0.0397078	6.39495E-09	7.19406E-09
i-Pentane		0.580728	1.09443	0*	0.0973250	2.68675E-06	4.48164E-07	0.0596909	5.54415E-07			0.580728	0.0181643	0.0181643	1.41650E-08	1.41650E-08	0.0181643	1.41637E-08	1.59482E-08
n-Pentane		0.784940	1.76977	0*	0.149084	6.17648E-06	1.03272E-06	0.0965265	1.20761E-06			0.784940	0.0293735	0.0293735	3.54902E-08	3.54902E-08	0.0293735	3.54870E-08	3.98416E-08
Isohexane		0.360148	1.13716	0*	0.0791989	8.09780E-06	1.36278E-06	0.0620196	4.37377E-07			0.360148	0.0188729	0.0188729	5.70507E-08	5.70507E-08	0.0188729	5.70455E-08	6.40959E-08
n-Hexane		0.296894	1.12803	0*	0.0718293	1.12603E-05	1.90165E-06	0.0615210	3.26394E-07			0.296894	0.0187212	0.0187212	8.72638E-08	8.72638E-08	0.0187212	8.72558E-08	9.81483E-08
Benzene		0.0275097	1.37606	0*	0.0300903	0.00241172	0.000459097	0.0756199	6.20122E-05			0.0275097	0.0230695	0.0230695	8.05379E-05	8.05379E-05	0.0230695	8.05305E-05	8.91459E-05
Cyclohexene		0.0879418	2.09016	0*	0.0571187	0.00150237	0.000280442	0.114132	1.69400E-05			0.0879418	0.0347640	0.0347640	4.35449E-05	4.35449E-05	0.0347640	4.35409E-05	4.85453E-05
Heptane, 2-Methyl-		0.122538	1.03716	0*	0.0424893	5.24292E-05	9.05869E-06	0.0565634	8.95909E-08			0.122538	0.0172131	0.0172131	6.50349E-07	6.50349E-07	0.0172131	6.50289E-07	7.34148E-07
n-Heptane		0.132338	0.887605	0*	0.0419691	2.48178E-05	4.25248E-06	0.0484072	4.98592E-08			0.132338	0.0147308	0.0147308	2.65430E-07	2.65430E-07	0.0147308	2.65405E-07	3.00576E-07
Toluene		0.0475607	3.93898	0*	0.0773276	0.0172231	0.00342658	0.216247	0.000157093			0.0475607	0.0663886	0.0663886	0.000751805	0.000751805	0.0663886	0.000751737	0.000827120
Isooctane		0.119122	0.745478	0*	0.0360538	1.86452E-05	3.18149E-06	0.0406561	6.47489E-08			0.119122	0.0123720	0.0123720	1.83515E-07	1.83515E-07	0.0123720	1.83498E-07	2.07031E-07
Octane		0.0348194	0.389916	0*	0.0139559	3.56791E-05	6.22802E-06	0.0212650	6.09654E-08			0.0348194	0.00647149	0.00647149	5.18277E-07	5.18277E-07	0.00647149	5.18230E-07	5.83278E-07
Ethylbenzene		0.00595473	0.677040	0*	0.0127148	0.00537743	0.00111662	0.0370690	1.53024E-05			0.00595473	0.0115104	0.0115104	0.000290564	0.000290564	0.0115104	0.000290537	0.000317996
o-Xylene		0.0201203	3.15438	0*	0.0584205	0.0449930	0.00978955	0.173183	0.000124262			0.0201203	0.0550511	0.0550511	0.00296458	0.00296458	0.0550511	0.00296430	0.00321080
Isononane		0.0102541	0.155407	0*	0.00479288	2.55567E-05	4.51773E-06	0.00847549	1.96887E-08			0.0102541	0.00257949	0.00257949	4.38868E-07	4.38868E-07	0.00257949	4.38828E-07	4.94067E-07
Nonane		0.00650740	0.126321	0*	0.00352125	3.61117E-05	6.46988E-06	0.00688926	2.42119E-08			0.00650740	0.00209702	0.00209702	7.23148E-07	7.23148E-07	0.00209702	7.23081E-07	8.12163E-07
Decane		0.00350760	0.114300	0*	0.00263737	9.45216E-05	1.75302E-05	0.00623360	1.16652E-08			0.00350760	0.00189900	0.00189900	2.60375E-06	2.60375E-06	0.00189900	2.60352E-06	2.92429E-06
Mass Flow		lb/h	lb/h	lb/h	lb/h	lb/h	lb/h	lb/h	lb/h	lb/h	lb/h	lb/h	lb/h	lb/h	lb/h	lb/h	lb/h	lb/h	lb/h
Triethylene Glycol		0.0357572	8.87998E-09	0*	3124.59	42.4191	3166.97	0.0363530	0.0362063	0	0	0.0357572	3124.55	3124.55	3124.55	3124.55	3124.55	3124.86	3124.85
Oxygen		0	0	40.4689*	0	0	0	0	0	0	0	0	0	0	0	0	0	0	0
Nitrogen		1.06113	0.00162204	0*	0.0241155	4.47463E-12	4.48360E-12	0.00162221	7.52916E-09	0	0	1.06113	0.00162220	0.00162220	8.96442E-15	8.96442E-15	0.00162220	8.96442E-15	0
CO2		1.14908	0.0471838	0*	0.564449	1.15343E-07	1.16838E-07	0.0473054	4.74021E-06	0	0	1.14908	0.0473006	0.0473006	1.49512E-09	1.49512E-09	0.0473006	1.49512E-09	1.66018E-09
Water		3.91520	5.10157	0*	141.410	74.5696	110.896	153.498	52.3179	0	0	3.91520	137.507	137.507	36.3268	36.3268	137.507	36.3271	36.3277
Methane		104.652	0.570453	0*	8.42639	2.40714E-08	2.41755E-08	0.570570	4.95269E-06	0	0	104.652	0.570565	0.570565	1.04143E-10	1.04143E-10	0.570565	1.04143E-10	1.17723E-10
Ethane		46.9433	0.805477	0*	9.62091	4.18629E-07	4.22383E-07	0.805636	6.60177E-06	0	0	46.9433	0.805629	0.805629	3.75433E-09	3.75433E-09	0.805629	3.75433E-09	4.24044E-09
Propane		27.9808	0.885368	0*	8.63893	1.63028E-06	1.65134E-06	0.885482	4.50018E-06	0	0	27.9808	0.885478	0.885478	2.10622E-08	2.10622E-08	0.885478	2.10622E-08	2.37853E-08
i-Butane		4.32950	0.167530	0*	1.35992	5.47190E-07	5.55651E-07	0.167540	4.01258E-07	0	0	4.32950	0.167540	0.167540	8.46135E-09	8.46135E-09	0.167540	8.46135E-09	9.57428E-09
n-Butane		12.0208	0.660716	0*	4.91066	4.50932E-06	4.59416E-06	0.660813	4.06470E-06	0	0	12.0208	0.660809	0.660809	8.48410E-08	8.48410E-08	0.660809	8.48410E-08	9.54428E-08
i-Pentane		3.99456	0.375208	0*	2.11026	8.57745E-06	8.81071E-06	0.375237	1.16175E-06	0	0	3.99456	0.375236	0.375236	2.33256E-07	2.33256E-07	0.375236	2.33256E-07	2.62645E-07
n-Pentane		5.39924	0.606738	0*	3.23255	1.97184E-05	2.03029E-05	0.606797	2.53048E-06	0	0	5.39924	0.606795	0.606795	5.84419E-07	5.84419E-07	0.606795	5.84419E-07	6.56135E-07
Isohexane		2.95891	0.465647	0*	2.05109	3.08782E-05	3.20003E-05	0.465672	1.09468E-06	0	0	2.95891	0.465672	0.465672	1.12210E-06	1.12210E-06	0.465672	1.12210E-06	1.26078E-06
n-Hexane		2.43922	0.461910	0*	1.86024	4.29375E-05	4.46539E-05	0.461929	8.16907E-07	0	0	2.43922	0.461930	0.461930	1.71634E-06	1.71634E-06	0.461930	1.71634E-06	1.93060E-06
Benzene		0.204866	0.510749	0*	0.706362	0.00833577	0.00977160	0.514661	0.000140683	0	0	0.204866	0.515955	0.515956	0.00143583	0.00143583	0.515956	0.00143583	0.00158945
Cyclohexene		0.688710	0.815843	0*	1.41005	0.00546075	0.00627714	0.816863	4.04142E-05	0	0	0.688710	0.817639	0.817639	0.000816391	0.000816391	0.817639	0.000816391	0.000910223
Heptane, 2-Methyl-		1.33449	0.562954	0*	1.45860	0.000265003	0.000281958	0.562961	2.97225E-07	0	0	1.33449	0.562977	0.562977	1.69554E-05	1.69554E-05	0.562977	1.69554E-05	1.91419E-05
n-Heptane		1.26424	0.422620	0*	1.26383	0.000110038	0.000116108	0.422624	1.45100E-07	0	0	1.26424	0.422630	0.422630	6.07033E-06	6.07033E-06	0.422630	6.07033E-06	6.87475E-06
Toluene		0.417788	1.72456	0*	2.14120	0.0702191	0.0860292	1.73604	0.000420382	0	0	0.417788	1.75143	1.75143	0.0158100	0.0158100	1.75143	0.0158100	0.0173955
Isooctane		1.29728	0.404635	0*	1.23768	9.42416E-05	9.90261E-05	0.404639	2.14810E-07	0	0	1.29728	0.404644	0.404644	4.78447E-06	4.78447E-06	0.404644	4.78447E-06	5.39805E-06
Octane		0.379196	0.211641	0*	0.479089	0.000180339	0.000193852	0.211646	2.02258E-07	0	0	0.379196	0.211659	0.211659	1.35121E-05	1.35121E-05	0.211659	1.35121E-05	1.52082E-05
Ethylbenzene		0.0602713	0.341546	0*	0.405670	0.0252615	0.0323021	0.342894	4.71832E-05	0	0	0.0602713	0.349888	0.349888	0.00704060	0.00704060	0.349888	0.00704060	0.00770601
o-Xylene		0.203649	1.59129	0*	1.86393	0.211363	0.283197	1.60197	0.000383148	0	0	0.203649	1.67342	1.67342	0.0718341	0.0718341	1.67342	0.0718341	0.0778075
Isononane		0.125384	0.0947109	0*	0.184737	0.000145038	0.000157885	0.0947126	7.33396E-08	0	0	0.125384	0.0947254	0.0947254	1.28468E-05	1.28468E-05	0.0947254	1.28468E-05	1.44640E-05
Nonane		0.0795700	0.0769845	0*	0.135724	0.000204939	0.000226108	0.0769867	9.01884E-08	0	0	0.0795700	0.0770078	0.0770078	2.11684E-05	2.11684E-05	0.0770078	2.11684E-05	2.37763E-05
Decane		0.0475802	0.0772769	0*	0.112773	0.000595089	0.000679644	0.0772780	4.82046E-08	0	0	0.0475802	0.0773626	0.0773626	8.45543E-05	8.45543E-05	0.0773626	8.45543E-05	9.49721E-05

Process Streams		(726A) U Flash Fuel	Btex Vent	CombO2	720	721	722	723	724	725	725A	726	727	729	730	734	736	738	746
Properties	Status:	Solved	Solved	Solved	Solved	Solved	Solved	Solved	Solved	Solved	Solved	Solved	Solved	Solved	Solved	Solved	Solved	Solved	Solved
Phase: Total	From Block:	U BP Reg	U Btex Cond	–	VLVE-103	U Gly Reb	U Gly Regen	U Gly Regen	U Gly Rejen Cond	U Gly Flash	VLVE-100	U Gly Flash	U Gly Flash	U Rich Lean Ex	U Gly Reb	U Rich Lean Ex	VLVE-704	U TEG Make up	RCYL-2
	To Block:	SPLT-101	MIX-103	MIX-103	U Gly Flash	U Gly Regen	U Gly Reb	U Gly Rejen Cond	U Gly Regen	VLVE-100	MIX-100	U BP Reg	U Rich Lean Ex	VLVE-704	U Rich Lean Ex	U TEG Make up	U Gly Regen	U Gly Pump	U DeHy Glycol Contact
Property	**Units**																		
Temperature	°F	169.872	190	53*	130.243	400*	324.361	215.248	213.642	170.691		170.691	170.691	350*	400	212.421	327.653	212.410	121.820
Pressure	psig	30*	1	0*	42*	4	4	1	1	42	30*	42	42	39	4	1	2*	1	1097
Mass Flow	lb/h	222.983	16.9842	40.4689	3320.19	117.311	3278.29	165.447	52.3552	0	0	222.983	3274.07	3274.07	3160.97	3160.97	3274.07	3161.29	3161.28
Mass Fraction Vapor	%	100	100	100	0.949088	100	0	100	0			100	0	0.132441	0	0	2.10165	0	0
Enthalpy	MMBtu/h	-0.343521	-0.0350317	-0.000217976	-8.12841	-0.500744	-7.56251	-0.882295	-0.349920	0	0	-0.343521	-7.97293	-7.59414	-6.82108	-7.19987	-7.59414	-7.20059	-7.35735
Mole Fraction Vapor	%	100	100	100	3.52049	100	0	100	0			100	0	0.562032	0	0	10.9704	0	0
Molecular Weight	lb/lbmol	23.3886	35.7431	31.9988	110.479	26.5116	120.310	18.9884	18.0265			23.3886	114.348	114.348	138.495	138.495	114.348	138.496	138.496
Molar Flow	lbmol/h	9.53383	0.475175	1.26470*	30.0527	4.42489	27.2486	8.71301	2.90434	0	0	9.53383	28.6324	28.6324	22.8237	22.8237	28.6324	22.8258	22.8259
Specific Gravity		0.807544	1.23411	1.10483		0.915375	0.980946	0.655620	0.959059			0.807544	1.06797		0.931278	1.04637		1.04637	1.10021
Dynamic Viscosity	cP	0.0119367	0.0114408	0.0197627		0.0159552	1.21573	0.0126740	0.277058			0.0119645	5.47142		0.792761	3.48226		3.48270	13.8483
Kinematic Viscosity	cSt	4.77603	8.78704	14.4200		18.3921	1.24052	19.0552	0.289158			3.77060	5.12803		0.852066	3.33110		3.33150	12.5989
Thermal Conductivity	Btu/(h*ft*°F)	0.0204400	0.0134509	0.0143567		0.0189218	0.113895?	0.0155154	0.390761?			0.0205130	0.117989		0.106799?	0.113810?		0.113810?	0.113863
Std Vapor Volumetric Flow	MMSCFD	0.0868306	0.00432772	0.0115184	0.273709	0.0403002	0.248170	0.0793549	0.0264516	0	0	0.0868306	0.260773	0.260773	0.207870	0.207870	0.260773	0.207889	0.207889
Std Liquid Volumetric Flow	Mbbl/d	0.0412833	0.00163467	0.00242814	0.207000	0.00770996	0.199794	0.0118103	0.00358813	0	0	0.0412833	0.200306	0.200306	0.192084	0.192084	0.200306	0.192103*	0.192103
Gross Ideal Gas Heating Value	Btu/ft^3	1365.95	1361.86	0	2968.76	313.817	3202.92	122.112	50.6658			1365.95	3031.64	3031.64	3763.03	3763.03	3031.64	3763.06	3763.06
CpCv Ratio		1.20959	1.15770	1.40000	1.09736	1.18265	1.11349	1.30878	1.56085			1.21163	1.09926	1.12546	1.10719	1.08319	1.10985	1.08319	1.07499
Compressibility		0.991717	0.989991	0.999012	0.0488992	0.992059	0.00436957	0.991023	0.000654645			0.989552	0.0143880	0.0172935	0.00483212	0.00461825	0.112600	0.00461832	0.359561
Mass Volume	ft^3/lb	6.40921	12.3029	11.6880	0.0494221	18.4650	0.0163450	24.0836	0.0167181			5.04819	0.0150131	0.0244728	0.0172168	0.0153231	0.498328	0.0153230	0.0145732
Mass Density	lb/ft^3	0.156025	0.0812815	0.0855576	20.2339	0.0541565	61.1806	0.0415220	59.8156			0.198091	66.6083	40.8618	58.0829	65.2608	2.00671	65.2612	68.6189
Gross Liquid Heating Value	Btu/lb	22065.5	14030.2	0	9901.64	3722.36	9811.82	1445.77	7.39525			22065.5	9764.03	9764.03	10037.8	10037.8	9764.03	10037.8	10037.8
Net Ideal Gas Heating Value	Btu/ft^3	1241.73	1242.85	0	2704.05	244.128	2919.26	68.0411	0.330087			1241.73	2761.12	2761.12	3437.89	3437.89	2761.12	3437.92	3437.92

ATTACHMENT P

Public Notice Affidavit

To Be Provided Upon Receipt of Affidavit

AIR QUALITY PERMIT NOTICE
Notice of Application

Notice is given that Triad Hunter, LLC has applied to the West Virginia Department of Environmental Protection, Division of Air Quality, for a Modification to its Permit for its Spencer Well Pad Compressor Station off of County Route 26 near Middlebourne in Tyler County, West Virginia. (Lat. 39.5395, Long. -80.6653)

The applicant estimates the following potential *increases* in potential emissions of Regulated Air Pollutants will be:

0.85 tons of Nitrogen Oxides per year
18.07 tons of Particulate Matter per year
0.05 tons of Benzene per year

The applicant estimates the following potential *decreases* in potential emissions of Regulated Air Pollutants will be:

8.76 tons of Carbon Monoxide per year
3,389 tons of Greenhouse Gases per year
15.22 tons of Volatile Organics per year
0.03 tons of Sulfur Dioxide per year
2.67 tons of Formaldehyde per year

Startup of operation is planned to begin on or about the 30th day of February 2016. Written comments will be received by the West Virginia Department of Environmental Protection, Division of Air Quality, 601 57th Street, SE, Charleston, WV 25304, for at least 30 calendar days from the date of publication of this notice.

Any questions regarding this permit application should be directed to the DAQ at (304) 926-0499, extension 1227, during normal business hours.

Dated this the **(Day)** day of **(Month)**, **(Year)**.

By: Mr. Rocky Roberts, Senior Vice President
Triad Hunter, LLC
PO Box 430
Reno, Ohio 45773