625 Liberty Ave,
Suite1700
Pittsburgh PA 15222
www.eqt.com

CERTIFIED MAIL # 7016 2140 0001 1242 1374

May 12, 2016

Mr. William Durham, Director
West Virginia Department of Environmental Protection
Division of Air Quality
601 57th Street, SE
Charleston, West Virginia, 25304

RE: EQT Production Company, PEN-15 Well Pad
Consent Order #: CO-R13-E-2016-04
Doddridge County, WV
R13 Permit Modification
R13-3339; Plant ID No. 085-00022

Dear Mr. Durham:

Enclosed are two electronic copies and one hardcopy of the PEN-15 R13 application. EQT Production Company (EQT) is submitting this R13 permit application to add an additional vapor recovery unit (VRU) and associated equipment. Please note that this site is operating under the Consent Order CO-R13-E-2016-04. The additional VRU will serve as a VRU on the second low pressure separator. This application serves as a formal request to modify the control equipment operating under the Consent Order. After issuance of this permit EQT will start the process of closing the aforementioned consent order.

If you have any questions concerning this permitting action, please contact Alex Bosiljevac at (412) 395-3699 or by email at abosiljevac@eqt.com.

Sincerely,

R. Alex Bosiljevac
EQT Production

cc: James Robertson

PROJECT REPORT

EQT Production
PEN-15 Pad

R13 Permit Application

Where energy meets innovation.

TRINITY CONSULTANTS
4500 Brooktree Drive
Suite 103
Wexford, PA 15090
(724) 935-2611

May 2017

Environmental solutions delivered uncommonly well

TABLE OF CONTENTS

1. INTRODUCTION 3

1.1. FACILITY AND PROJECT DESCRIPTION 3

1.2. SOURCE STATUS 3

1.3. R-13 APPLICATION ORGANIZATION 4

2. SAMPLE EMISSION SOURCE CALCULATIONS 5

3. R-13 APPLICATION FORMS 6

ATTACHMENT A: CURRENT BUSINESS CERTIFICATE

ATTACHMENT B: AREA MAP

ATTACHMENT C: INSTALLATION AND START UP SCHEDULE

ATTACHMENT D: REGULATORY DISCUSSION

ATTACHMENT E: PLOT PLAN

ATTACHMENT F: PROCESS FLOW DIAGRAM

ATTACHMENT G: PROCESS DESCRIPTION ATTACHMENT I: EMISSION UNITS TABLE

ATTACHMENT J: EMISSIONS POINT DATA

ATTACHMENT K: FUGITIVE EMISSIONS DATA

ATTACHMENT L: EMISSIONS UNIT DATA SHEETS

ATTACHMENT M: AIR POLLUTION CONTROL DEVICES

ATTACHMENT N: EMISSION CALCULATIONS

ATTACHMENT O: MONITORING/RECORDKEEPING/REPORTING/TESTING PLANS

ATTACHMENT P: CLASS I LEGAL NOTICE

EQT Production Company (EQT) is submitting this permit modification application (R-13) to the West Virginia Department of Environmental Protection (WVDEP) for the construction and operation of new equipment at an existing natural gas production well pad, PEN-15, located in Ritchie County, West Virginia. The facility is currently permitted under R13-3339

1.1. FACILITY AND PROJECT DESCRIPTION

The PEN-15 wellpad is a natural gas production facility that consists of ten (10) natural gas wells. Natural gas and produced water are extracted from deposits underneath the surface. Natural gas is transported from the well to a gas line for additional processing and compression, as necessary. The liquids produced are stored in storage vessels.

The PEN-15 wellpad currently consists of the following equipment:

- Twelve (12) 400 barrel (bbl) storage tanks for produced fluids, controlled by four (4) enclosed combustors, two rated at 11.66 MMBtu/hr and two rated at 19.22 MMBtu/hr,
- Ten (10) line heaters, each rated at 1.54 MMBtu/hr (heat input),
- Three (3) thermoelectric generators (TEG), each rated at 0.013 MMBtu/hr,
- Two (2) 140 bbl storage tank for sand and produced fluids from the sand separator,
- One (1) low pressure separator and associated 1 MMBtu/hr heater,
- One (1) Vapor recovery unit (VRU) powered by a natural gas-fired 440 hp engine.
- One (1) low pressure separator and associated 1 MMBtu/hr heater.
- Produced fluid truck loading (emissions of which are controlled by the aforementioned combustors), and
- Associated piping and components.

With this application, EQT is proposing to install the following equipment:

- One (1) VRU powered by a natural gas-fired 110 hp engine.

A process flow diagram is included as Attachment F.

1.2. SOURCE STATUS

WVDEP must make stationary source determinations on a case-by-case basis using the guidance under the Clean Air Act (CAA) and EPA's and WVDEP's implementing regulations. The definition of stationary source in 40 CFR 51.166(b) includes the following:

> *"(6) Building, structure, facility, or installation means all of the pollutant emitting activities which belong to the same industrial grouping, are located on or more contiguous or adjacent properties, and are under control of the same person (or persons under common control)."*

Other additional pollutant emitting facilities should be aggregated with the PEN-15 Pad for air permitting purposes if, and only if, all three elements of the "stationary source" definition above are fulfilled.

WVDEP previously determined that the PEN-15 wellpad should not be aggregated with any other sources with the issuance of the facility's existing G70 permit. There are no Marcellus facilities contiguous or adjacent to the PEN-15 Pad. The nearest wellpad, PEN-13, is located approximately 0.8 miles southwest of PEN-15. Therefore, the PEN-15 pad should continue to be considered a separate stationary source with respect to permitting programs, including Title V and Prevention of Significant Deterioration (PSD). As discussed in this application, the facility is a minor source of air emissions with respect to New Source Review (NSR) and Title V permitting.

1.3. R-13 APPLICATION ORGANIZATION

This West Virginia Code of State Regulations, Title 45 (CSR) Series 13 (45 CSR 13) R-13 permit application is organized as follows:

- Section 2: Sample Emission Source Calculations;
- Section 3: R-13 and Permission to Commence Construction Application Forms;
- Attachment A: Business Certificate;
- Attachment B: Area Map;
- Attachment C: Installation and Start Up Schedule;
- Attachment D: Regulatory Discussion;
- Attachment E: Plot Plan;
- Attachment F: Detailed Process Flow Diagram;
- Attachment G: Process Description;
- Attachment I: Emission Units Table;
- Attachment J: Emission Points Data Summary Sheet;
- Attachment K: Fugitive Emissions Data Summary Sheet;
- Attachment L: Emissions Unit Data Sheets;
- Attachment M: Air Pollution Control Device Sheets:
- Attachment N: Supporting Emission Calculations;
- Attachment O: Monitoring/Recordkeeping/Reporting/Testing Plans; and
- Attachment P: Legal Notice.

Emissions from the proposed project will result from natural gas combustion in the VRU engines, heaters, TEGs, and enclosed combustors. In addition, emissions will also result from the storage of organic liquids in storage tanks and loading of organic liquids into tank trucks. Fugitive emissions will result from component leaks from the operation of the station. The methods by which emissions from each of these source types, as well as the existing source types, are calculated are summarized below. Detailed emission calculations are presented in Attachment N of this application.

- **Line Heaters, LPS Heaters, TEGs, and Combustors:** Potential emissions of criteria pollutants and hazardous air pollutants (HAPs) are calculated using U.S. EPA's AP-42 factors for natural gas external combustion.[1] These calculations assume a heat content of natural gas of 1,050 Btu/scf (conservatively lower than the estimated Btu content). Greenhouse gas emissions are calculated according to 40 CFR 98 Subpart C.

- **VRU Engines:** Emissions of NO_X, VOC, and CO from the engines are calculated using manufacturer's specifications. Greenhouse gas emissions are calculated according to 40 CFR 98 Subpart C. The remainder of the emissions are calculated using U.S. EPA's AP-42 factors for natural gas stationary internal combustion.[2]

- **Fugitive Equipment Leaks:** Emissions of VOC and HAPs from leaking equipment components have been estimated using facility estimated component counts and types along with *Protocol for Equipment Leak Emission Estimates, EPA 453/R-95-017, November 1995.* Greenhouse gas emissions from component leaks are calculated according to the procedures in 40 CFR 98 Subpart W.

- **Storage Tanks:** Working, breathing and flashing emissions of VOC and HAPs from the condensate and produced water stored in the tanks at the facility are calculated using Bryan Research Engineering ProMax® Software. Controlled calculations assume an overall control efficiency (capture and destruction) of 98%. The throughput for the condensate and produced water tanks are based on the maximum monthly condensate and produced water at the PEN15 well pad, respectively, annualized (i.e., the maximum monthly throughput for the pad times 12). The throughput for the produced fluids tanks assumes the maximum monthly throughput for condensate and produced water, annualized, and includes an additional 200 percent compliance margin. The composition for the analysis was from a sample taken at PEN15. Emissions of VOC and HAP from the sand separator tank are calculated using E&P Tank v2.0. The produced fluid throughput is calculated as follows:

$$Proeduced\ Fluids\ Tank\ Throughput\ \left(\frac{bbl}{yr}\right) = 2\ x\left(Produced\ Water\ Throughput\ \left(\frac{bbl}{month}\right) * Condensate\ Throughput\ \left(\frac{bbl}{month}\right)\right) x\ 12\left(\frac{month}{yr}\right)$$

- **Tank Truck Loading:** Emissions of VOC and HAPs from the loading of organic liquids from storage tanks to tank truck are calculated using Bryan Research Engineering ProMax® Software. Truck loading are controlled by the enclosed combustors.

- **Haul Roads:** Fugitive dust emitted from facility roadways has been estimated using projected vehicle miles traveled along with U.S. EPA's AP-42 factors for unpaved haul roads.[3]

[1] U.S. EPA, AP 42, Fifth Edition, Volume I, Chapter 1.4, Natural Gas Combustion, Supplement D, July 1998.

[2] U.S. EPA, AP 42, Fifth Edition, Volume I, Chapter 3.2, Natural Gas-fired Reciprocating Engines, Supplement D, August 2000.

[3] U.S. EPA, AP 42, Fifth Edition, Volume I, Section 13.2.2, Unpaved Roads, November 2006.

3. R-13 APPLICATION FORMS

The WVDEP permit application forms contained in this application include all applicable R-13 application forms including the required attachments.

WEST VIRGINIA DEPARTMENT OF ENVIRONMENTAL PROTECTION

DIVISION OF AIR QUALITY

601 57th Street, SE
Charleston, WV 25304
(304) 926-0475
www.dep.wv.gov/daq

APPLICATION FOR NSR PERMIT AND TITLE V PERMIT REVISION (OPTIONAL)

PLEASE CHECK ALL THAT APPLY TO **NSR (45CSR13)** (IF KNOWN):

☐ **CONSTRUCTION** ☒ **MODIFICATION** ☐ **RELOCATION**
☐ **CLASS I ADMINISTRATIVE UPDATE** ☐ **TEMPORARY**
☐ **CLASS II ADMINISTRATIVE UPDATE** ☐ **AFTER-THE-FACT**

PLEASE CHECK TYPE OF **45CSR30 (TITLE V)** REVISION (IF ANY):

☐ **ADMINISTRATIVE AMENDMENT** ☐ **MINOR MODIFICATION**
☐ **SIGNIFICANT MODIFICATION**

IF ANY BOX ABOVE IS CHECKED, INCLUDE TITLE V REVISION INFORMATION AS **ATTACHMENT S** TO THIS APPLICATION

FOR TITLE V FACILITIES ONLY: Please refer to "Title V Revision Guidance" in order to determine your Title V Revision options (Appendix A, "Title V Permit Revision Flowchart") and ability to operate with the changes requested in this Permit Application.

Section I. General

1. Name of applicant *(as registered with the WV Secretary of State's Office):*
EQT Production Company

2. Federal Employer ID No. ***(FEIN):***
25-0724685

3. Name of facility *(if different from above):*
PEN 15 Wellpad

4. The applicant is the:
☐ **OWNER** ☐ **OPERATOR** ☒ **BOTH**

5A. Applicant's mailing address:
625 Liberty Avenue, Suite 1700
Pittsburgh, PA 15222

5B. Facility's present physical address:
Pennsboro, Ritchie County, West Virginia

6. **West Virginia Business Registration.** Is the applicant a resident of the State of West Virginia? ☒ **YES** ☐ **NO**

- If **YES,** provide a copy of the **Certificate of Incorporation/Organization/Limited Partnership** (one page) including any name change amendments or other Business Registration Certificate as **Attachment A.**
- If **NO,** provide a copy of the **Certificate of Authority/Authority of L.L.C./Registration** (one page) including any name change amendments or other Business Certificate as **Attachment A.**

7. If applicant is a subsidiary corporation, please provide the name of parent corporation: EQT Corporation

8. Does the applicant own, lease, have an option to buy or otherwise have control of the *proposed site?* ☒ **YES** ☐ **NO**

- If **YES,** please explain: Applicant owns the site.
- If **NO,** you are not eligible for a permit for this source.

9. Type of plant or facility (stationary source) to be **constructed, modified, relocated, administratively updated** or **temporarily permitted** (e.g., coal preparation plant, primary crusher, etc.): Natural Gas Production Wellsite

10. North American Industry Classification System **(NAICS)** code for the facility:
211111

11A. DAQ Plant ID No. (for existing facilities only):
085 – 00022

11B. List all current 45CSR13 and 45CSR30 (Title V) permit numbers associated with this process (for existing facilities only):
G70-A044B, R13-2997, R13-3339

All of the required forms and additional information can be found under the Permitting Section of DAQ's website, or requested by phone.

12A.

- For **Modifications, Administrative Updates** or **Temporary permits** at an existing facility, please provide directions to the *present location* of the facility from the nearest state road;
- For **Construction** or **Relocation permits,** please provide directions to the *proposed new site location* from the nearest state road. Include a **MAP** as **Attachment B**.

From Pennsboro, WV, go east on Old US 50 for approximately 1 mile and then turn right onto Pullman Drive (Route 74) and go approximately 1.5 miles. Turn left onto access road to the site.

12.B. New site address (if applicable):	12C. Nearest city or town: Pennsboro	12D. County: Ritchie
12.E. UTM Northing (KM): 4,345.8	12F. UTM Easting (KM): 504.4	12G. UTM Zone: 17

13. Briefly describe the proposed change(s) at the facility:
EQT is proposing to install one (1) vapor recovery unit powered by an 110 bhp natural gas fired engine at the PEN-15 wellpad

14A. Provide the date of anticipated installation or change: 2016 (Upon permit issuance) – If this is an **After-The-Fact** permit application, provide the date upon which the proposed change did happen:	14B. Date of anticipated Start-Up if a permit is granted: 2017

14C. Provide a **Schedule** of the planned **Installation** of/**Change** to and **Start-Up** of each of the units proposed in this permit application as **Attachment C** (if more than one unit is involved).

15. Provide maximum projected **Operating Schedule** of activity/activities outlined in this application:
Hours Per Day 24 Days Per Week 7 Weeks Per Year 52

16. Is demolition or physical renovation at an existing facility involved? ☐ **YES** ☒ **NO**

17**. Risk Management Plans.** If this facility is subject to 112(r) of the 1990 CAAA, or will become subject due to proposed changes (for applicability help see www.epa.gov/ceppo), submit your **Risk Management Plan (RMP)** to U. S. EPA Region III.

18**. Regulatory Discussion.** List all Federal and State air pollution control regulations that you believe are applicable to the proposed process *(if known).* A list of possible applicable requirements is also included in Attachment S of this application (Title V Permit Revision Information). Discuss applicability and proposed demonstration(s) of compliance *(if known).* Provide this information as **Attachment D.**

Section II. Additional attachments and supporting documents.

19. Include a check payable to WVDEP – Division of Air Quality with the appropriate **application fee** (per 45CSR22 and 45CSR13).

20. Include a **Table of Contents** as the first page of your application package.

21. Provide a **Plot Plan,** e.g. scaled map(s) and/or sketch(es) showing the location of the property on which the stationary source(s) is or is to be located as **Attachment E** (Refer to ***Plot Plan Guidance***) **.**

– Indicate the location of the nearest occupied structure (e.g. church, school, business, residence).

22. Provide a **Detailed Process Flow Diagram(s)** showing each proposed or modified emissions unit, emission point and control device as **Attachment F.**

23. Provide a **Process Description** as **Attachment G.**

– Also describe and quantify to the extent possible all changes made to the facility since the last permit review (if applicable).

All of the required forms and additional information can be found under the Permitting Section of DAQ's website, or requested by phone.

24. Provide **Material Safety Data Sheets (MSDS)** for all materials processed, used or produced as **Attachment H.**

– For chemical processes, provide a MSDS for each compound emitted to the air.

25. Fill out the **Emission Units Table** and provide it as **Attachment I.**

26. Fill out the **Emission Points Data Summary Sheet (Table 1 and Table 2)** and provide it as **Attachment J.**

27. Fill out the **Fugitive Emissions Data Summary Sheet** and provide it as **Attachment K.**

28. Check all applicable **Emissions Unit Data Sheets** listed below:

☐ Bulk Liquid Transfer Operations	☐ Haul Road Emissions	☐ Quarry
☐ Chemical Processes	☐ Hot Mix Asphalt Plant	☐ Solid Materials Sizing, Handling and Storage Facilities
☐ Concrete Batch Plant	☐ Incinerator	☐ Storage Tanks
☐ Grey Iron and Steel Foundry	☐ Indirect Heat Exchanger	

☒ General Emission Unit, specify Internal combustion engines

Fill out and provide the **Emissions Unit Data Sheet(s)** as **Attachment L.**

29. Check all applicable **Air Pollution Control Device Sheets** listed below:

☐ Absorption Systems	☐ Baghouse	☐ Flare
☐ Adsorption Systems	☐ Condenser	☐ Mechanical Collector
☐ Afterburner	☐ Electrostatic Precipitator	☐ Wet Collecting System

☐ Other Collectors, specify

Fill out and provide the **Air Pollution Control Device Sheet(s)** as **Attachment M.**

30. Provide all **Supporting Emissions Calculations** as **Attachment N,** or attach the calculations directly to the forms listed in Items 28 through 31.

31. **Monitoring, Recordkeeping, Reporting and Testing Plans.** Attach proposed monitoring, recordkeeping, reporting and testing plans in order to demonstrate compliance with the proposed emissions limits and operating parameters in this permit application. Provide this information as **Attachment O.**

- Please be aware that all permits must be practically enforceable whether or not the applicant chooses to propose such measures. Additionally, the DAQ may not be able to accept all measures proposed by the applicant. If none of these plans are proposed by the applicant, DAQ will develop such plans and include them in the permit.

32. **Public Notice.** At the time that the application is submitted, place a **Class I Legal Advertisement** in a newspaper of general circulation in the area where the source is or will be located (See 45CSR§13-8.3 through 45CSR§13-8.5 and ***Example Legal Advertisement*** for details). Please submit the **Affidavit of Publication** as **Attachment P** immediately upon receipt.

33**. Business Confidentiality Claims.** Does this application include confidential information (per 45CSR31)?

☐ **YES** ☒ **NO**

- If **YES,** identify each segment of information on each page that is submitted as confidential and provide justification for each segment claimed confidential, including the criteria under 45CSR§31-4.1, and in accordance with the DAQ's ***"Precautionary Notice – Claims of Confidentiality"*** guidance found in the ***General Instructions*** as **Attachment Q.**

Section III. Certification of Information

34. **Authority/Delegation of Authority.** Only required when someone other than the responsible official signs the application. Check applicable **Authority Form** below:

☐ Authority of Corporation or Other Business Entity	☐ Authority of Partnership
☐ Authority of Governmental Agency	☐ Authority of Limited Partnership

Submit completed and signed **Authority Form** as **Attachment R.**

All of the required forms and additional information can be found under the Permitting Section of DAQ's website, or requested by phone.

35A. **Certification of Information.** To certify this permit application, a Responsible Official (per 45CSR§13-2.22 and 45CSR§30-2.28) or Authorized Representative shall check the appropriate box and sign below.

Certification of Truth, Accuracy, and Completeness

I, the undersigned ☒ **Responsible Official** / ☐ **Authorized Representative,** hereby certify that all information contained in this application and any supporting documents appended hereto, is true, accurate, and complete based on information and belief after reasonable inquiry I further agree to assume responsibility for the construction, modification and/or relocation and operation of the stationary source described herein in accordance with this application and any amendments thereto, as well as the Department of Environmental Protection, Division of Air Quality permit issued in accordance with this application, along with all applicable rules and regulations of the West Virginia Division of Air Quality and W.Va. Code § 22-5-1 et seq. (State Air Pollution Control Act). If the business or agency changes its Responsible Official or Authorized Representative, the Director of the Division of Air Quality will be notified in writing within 30 days of the official change.

Compliance Certification

Except for requirements identified in the Title V Application for which compliance is not achieved, I, the undersigned hereby certify that, based on information and belief formed after reasonable inquiry, all air contaminant sources identified in this application are in compliance with all applicable requirements.

SIGNATURE _____ DATE: 5/11/17
(Please use blue ink) *(Please use blue ink)*

35B. Printed name of signee: Mike Gavin		35C. Title: Vice President
35D. E-mail: gavinm@eqt.com	36E. Phone:	36F. FAX:
36A. Printed name of contact person (if different from above): Alex Bosiljevac		36B. Title: Environmental Coordinator
36C. E-mail: abosiljevac@eqt.com	36D. Phone: 412-395-3699	36E. FAX: 412-395-3699

PLEASE CHECK ALL APPLICABLE ATTACHMENTS INCLUDED WITH THIS PERMIT APPLICATION:

- ☒ **Attachment A: Business Certificate**
- ☒ **Attachment B: Map(s)**
- ☒ **Attachment C: Installation and Start Up Schedule**
- ☒ **Attachment D: Regulatory Discussion**
- ☒ **Attachment E: Plot Plan**
- ☒ **Attachment F: Detailed Process Flow Diagram(s)**
- ☒ **Attachment G: Process Description**
- ☐ **Attachment H: Material Safety Data Sheets (MSDS)**
- ☒ **Attachment I: Emission Units Table**
- ☒ **Attachment J: Emission Points Data Summary Sheet**
- ☒ **Attachment K: Fugitive Emissions Data Summary Sheet**
- ☒ **Attachment L: Emissions Unit Data Sheet(s)**
- ☒ **Attachment M: Air Pollution Control Device Sheet(s)**
- ☒ **Attachment N: Supporting Emissions Calculations**
- ☒ **Attachment O: Monitoring/Recordkeeping/Reporting/Testing Plans**
- ☒ **Attachment P: Public Notice**
- ☐ **Attachment Q: Business Confidential Claims**
- ☐ **Attachment R: Authority Forms**
- ☐ **Attachment S: Title V Permit Revision Information**
- ☒ **Application Fee**

Please mail an original and three (3) copies of the complete permit application with the signature(s) to the DAQ, Permitting Section, at the address listed on the first page of this application. Please DO NOT fax permit applications.

FOR AGENCY USE ONLY – IF THIS IS A TITLE V SOURCE:

- ☐ ***Forward 1 copy of the application to the Title V Permitting Group and:***
- ☐ ***For Title V Administrative Amendments:***
  - ☐ ***NSR permit writer should notify Title V permit writer of draft permit,***
- ☐ ***For Title V Minor Modifications:***
  - ☐ ***Title V permit writer should send appropriate notification to EPA and affected states within 5 days of receipt,***
  - ☐ ***NSR permit writer should notify Title V permit writer of draft permit.***
- ☐ ***For Title V Significant Modifications processed in parallel with NSR Permit revision:***
  - ☐ ***NSR permit writer should notify a Title V permit writer of draft permit,***
  - ☐ ***Public notice should reference both 45CSR13 and Title V permits,***
  - ☐ ***EPA has 45 day review period of a draft permit.***

All of the required forms and additional information can be found under the Permitting Section of DAQ's website, or requested by phone.

ATTACHMENT A

Current Business Certificate

WEST VIRGINIA
STATE TAX DEPARTMENT
BUSINESS REGISTRATION CERTIFICATE

ISSUED TO:
EQT PRODUCTION COMPANY
625 LIBERTY AVE 1700
PITTSBURGH, PA 15222-3114

BUSINESS REGISTRATION ACCOUNT NUMBER: **1022-8081**

This certificate is issued on: 08/4/2010

This certificate is issued by
the West Virginia State Tax Commissioner
in accordance with Chapter 11, Article 12, of the West Virginia Code

The person or organization identified on this certificate is registered to conduct business in the State of West Virginia at the location above.

This certificate is not transferrable and must be displayed at the location for which issued.

This certificate shall be permanent until cessation of the business for which the certificate of registration was granted or until it is suspended, revoked or cancelled by the Tax Commissioner.

Change in name or change of location shall be considered a cessation of the business and a new certificate shall be required.

TRAVELING/STREET VENDORS: Must carry a copy of this certificate in every vehicle operated by them. CONTRACTORS, DRILLING OPERATORS, TIMBER/LOGGING OPERATIONS: Must have a copy of this certificate displayed at every job site within West Virginia.

atL006 v.3
L0553297664

ATTACHMENT B

Area Map

ATTACHMENT B: AREA MAP

Figure 1 - Map of PEN-15 Location

UTM Northing (KM):	4,345.858
UTM Easting (KM):	504.160
Elevation:	~1,120 ft

ATTACHMENT C

Installation and Start Up Schedule

ATTACHMENT C

Schedule of Planned Installation and Start-Up

Proposed Unit	Date of Installation
Back-up Vapor Recover Unit Engine - Rated at 110 brake horsepower - S033	**2017**

ATTACHMENT D

Regulatory Discussion

ATTACHMENT D – REGULATORY APPLICABILITY

This section documents the applicability determinations made for Federal and State air quality regulations. The monitoring, recordkeeping, reporting, and testing plan is presented in Attachment O. In this section, applicability or non-applicability of the following regulatory programs is addressed:

- Prevention of Significant Deterioration (PSD) permitting;
- Title V of the 1990 Clean Air Act Amendments;
- New Source Performance Standards (NSPS);
- National Emission Standards for Hazardous Air Pollutants (NESHAP); and
- West Virginia State Implementation Plan (SIP) regulations.

In addition to providing a summary of applicable requirements, this section of the application also provides non-applicability determinations for certain regulations, allowing the WVDEP to confirm that identified regulations are not applicable to the well pad. Note that explanations of non-applicability are limited to those regulations for which there may be some question of applicability specific to the operations at the well pad. Regulations that are categorically non-applicable are not discussed (e.g., NSPS Subpart J, Standards of Performance for Petroleum Refineries).

Prevention of Significant Deterioration (PSD) Source Classification

Federal construction permitting programs regulate new and modified sources of attainment pollutants under Prevention of Significant Deterioration (PSD) and new and modified sources of non-attainment pollutants under Non-Attainment New Source Review (NNSR). PSD and NNSR regulations apply when a major source makes a change, such as installing new equipment or modifying existing equipment, and a significant increase in emissions results from the change. The site will remain a minor source with respect to the NSR program after the project since potential emissions are below all the NNSR/PSD thresholds. As such, NNSR/PSD permitting is not triggered by this construction activity. EQT will monitor future construction activities at the site closely and will compare any future increase in emissions with the NSR/PSD thresholds to ensure these activities will not trigger this program.

Title V Operating Permit Program

Title 40 of the Code of Federal Regulations Part 70 (40 CFR 70) establishes the federal Title V operating permit program. West Virginia has incorporated the provisions of this federal program in its Title V operating permit program in West Virginia Code of State Regulations (CSR) 45-30. The major source thresholds with respect to the West Virginia Title V operating permit program regulations are 10 tons per year (tpy) of a single HAP, 25 tpy of any combination of HAP, and 100 tpy of all other regulated pollutants.[1] The potential emissions of all regulated pollutants are below the corresponding threshold(s) at this facility after the proposed project. Therefore, the well pad is not a major source for Title V purposes.

New Source Performance Standards

New Source Performance Standards (NSPS), located in 40 CFR 60, require new, modified, or reconstructed sources to control emissions to the level achievable by the best-demonstrated technology as specified in the applicable provisions. Moreover, any source subject to an NSPS is also subject to the general provisions of NSPS Subpart A, except where expressly noted. The following is a summary of applicability and non-applicability determinations for NSPS regulations of relevance to the well pad. The following NSPS could potentially apply to the well pad:

---

[1] On June 23, 2014, the U.S Supreme Court decision in the case of *Utility Air Regulatory Group v. EPA* effectively changed the permitting procedures for GHGs under the PSD and Title V programs.

- 40 CFR Part 60 Subparts D/Da/Db/Dc – Steam Generating Units
- 40 CFR Part 60 Subpart K/Ka/Kb – Storage Vessels for Petroleum Liquids/Volatile Organic Liquids
- 40 CFR Part 60 Subpart JJJJ – Stationary Spark Ignition Internal Combustion Engines
- 40 CFR Part 60 Subpart OOOO – Crude Oil and Natural Gas Production, Transmission, and Distribution
- 40 CFR Part 60 Subpart OOOOa – Crude Oil and Natural Gas Facilities

NSPS Subparts D, Da, Db, and Dc – Steam Generating Units

These subparts apply to steam generating units of various sizes, all greater than 10 MMBtu/hr. The proposed project does not include any steam generating units with a heat input greater than 10 MMBtu/hr, therefore the requirements of these subparts do not apply.

NSPS Subpart K, Ka, and Kb – Storage Vessels for Petroleum Liquids/Volatile Organic Liquids

These subparts apply to storage tanks of certain sizes constructed, reconstructed, or modified during various time periods. Subpart K applies to storage tanks constructed, reconstructed, or modified prior to 1978, and Subpart Ka applies to those constructed, reconstructed, or modified prior to 1984. Both Subparts K and Ka apply to storage tanks with a capacity greater than 40,000 gallons. Subpart Kb applies to volatile organic liquid (VOL) storage tanks constructed, reconstructed, or modified after July 23, 1984 with a capacity equal to or greater than 75 m^3 (~19,813 gallons). All of the tanks at the well pad have a capacity of 19,813 gallons or less. As such, Subparts K, Ka, and Kb do not apply to the storage tanks at the PEN 15 facility.

NSPS Subpart JJJJ – Stationary Spark Ignition Internal Combustion Engines

New Source Performance Standards 40 CFR Part 60 Subpart JJJJ (NSPS JJJJ) affects owners and operators of stationary spark ignition internal combustion engines (SI ICE) that commence construction, reconstruction or modification after June 12, 2006. Applicability dates are based on the date the engine was ordered by the operator. The proposed 110 HP VRU engine (S033) is four stroke rich burn unit manufactured after January 1st, 2011 and subject to this subpart. The engine has been certified to meet the applicable emission limited in Table 1 of Subpart JJJJ. EQT will operate this engine according to the manufacturer's recommended practices and demonstrate compliance with the requirements specified in 40 CFR§60.4243 (maintenance plan/records) for certified affected SI ICE at the facility. No stack testing is required for certified engines.

NSPS Subpart OOOO—Crude Oil and Natural Gas Production, Transmission, and Distribution

Subpart OOOO, Standards of Performance for Crude Oil and Natural Gas Production, Transmission, and Distribution, applies to affected facilities that commenced construction, reconstruction, or modification after August 23, 2011 and or before September 18, 2015. This NSPS was published in the Federal Register on August 16, 2012, and subsequently amended. The proposed project does not include any construction, reconstruction or modification prior determination dates related to NSPS Subpart OOOO. Therefore, this subpart is not applicable to the proposed project. Note that EPA recently finalized 40 CFR 60 Subpart OOOOa; applicability of Subpart OOOOa is discussed in the following section.

NSPS Subpart OOOOa—Crude Oil and Natural Gas Production, Transmission, and Distribution

Subpart OOOOa, Standards of Standards of Performance for Crude Oil and Natural Gas Facilities, applies to affected facilities that commenced construction, reconstruction, or modification after September 18, 2015. The regulation was published final in the Federal Register on June 3, 2016. The rule includes provisions for the following facilities:

- Hydraulically fractured wells;
- Centrifugal compressors located between the wellhead and the point of custody transfer to the natural gas distribution segment;

- Reciprocating compressors located between the wellhead and the point of custody transfer to the natural gas distribution segment;
- Continuous bleed natural gas-driven pneumatic controllers with a bleed rate of > 6 scfh located in the production, gathering, processing, or transmission and storage segments (excluding natural gas processing plants);
- Continuous bleed natural gas-driven pneumatic controllers located at natural gas processing plants;
- Pneumatic pumps located in the production and processing segments;
- Storage vessels located in the production, gathering, processing, or transmission and storage segments;
- The collection of fugitive emissions components at a well site;
- The collection of fugitive emissions components at a compressor station; and
- Sweetening units located onshore that process natural gas produced from either onshore or offshore wells.

Based on the rule, the following paragraphs describe the applicability of the facilities to be located at the proposed facility.

40 CFR 60.5385 requires owners and operators of affected reciprocating compressors to change the rod packing prior to operating 26,000 hours or prior to 36 months since start-up or the last packing replacement. However, according to §60.5365a, compressors located at well sites are not affected facilities under Subpart OOOOa. Therefore, the VRU compressor is not subject to this requirement.

There are twelve (12) produced fluid storage vessels and two (2) sand separator storage vessels at the well pad. These tanks were installed prior to the applicability date of OOOOa. Furthermore, the storage vessels at both facilities will each have potential VOC emissions less than 6 tpy based on the permit application materials and enforceable limits to be included in the R-13 permit. As such, per §60.5365a(e), the tanks will not be storage vessel affected facilities under the rule.

Note that the proposed changes to the well pad do not meet the definition of modification under §60.5365a(i)(3)(i). Therefore, EQT will be not be subject to the leak detection and repair program under OOOOa.

The new pneumatic controllers will potentially be subject to NSPS OOOOa. Per §60.5365a(d)(1), a pneumatic controller affected facility is a single continuous bleed natural gas-driven pneumatic controller operating at a natural gas bleed rate greater than 6 scfh. No pneumatic controllers installed will meet the definition of a pneumatic controller affected facility. Therefore, these units are not subject to the requirements of Subpart OOOOa

Non-Applicability of All Other NSPS

NSPS are developed for particular industrial source categories. Other than NSPS developed for natural gas processing plants (Subpart OOOO) and the applicability of a particular NSPS to the well pad can be readily ascertained based on the industrial source category covered. All other NSPS are categorically not applicable to the proposed project.

National Emission Standards for Hazardous Air Pollutants (NESHAP)

Part 63 NESHAP allowable emission limits are established on the basis of a maximum achievable control technology (MACT) determination for a particular major source. A HAP major source is defined as having potential emissions in excess of 25 tpy for total HAP and/or potential emissions in excess of 10 tpy for any individual HAP. The well pad is an Area (minor) source of HAP since its potential emissions of HAP are less than the 10/25 major source thresholds. NESHAP apply to sources in specifically regulated industrial source categories (Clean Air Act Section 112(d)) or on a case-by-case basis (Section 112(g)) for facilities not regulated as a specific industrial source type. Besides 40 CFR 63 Subpart A (NESHAP Subpart A), which is similar to 40 CFR 60 Subpart A (NSPS Subpart A), the following NESHAP could potentially apply to the well pad:

- 40 CFR Part 63 Subpart HH – Oil and Natural Gas Production Facilities
- 40 CFR Part 63 Subpart ZZZZ – Stationary Reciprocating Internal Combustion Engines

> 40 CFR Part 63 Subpart JJJJJJ – Industrial, Commercial, and Institutional Boilers

NESHAP Subpart HH — Oil and Natural Gas Production Facilities

This standard contains requirements for both major and area sources of HAP. At area sources, the only affected source is a triethylene glycol dehydration unit (§63.760(b)(2)). The well pad does not include a triethylene glycol dehydration unit; therefore the requirements of this subpart do not apply.

NESHAP Subpart ZZZZ - Stationary Reciprocating Internal Engines

This rule affects reciprocating internal combustion engines (RICE) located at a major and area sources of HAP. 40 CFR §63.6590(c) states that a new or reconstructed stationary RICE located at an area HAP source must meet the requirements of NESHAP Subpart ZZZZ by meeting the requirements of NSPS Subpart JJJJ. No further requirements apply for such engines under NESHAP Subpart ZZZZ. The PEN-15 well pad is a minor (area) source of hazardous air pollutants and the VRU engine is considered a new stationary RICE. Therefore, the requirements contained in §63.6590(c) are applicable. EQT will be in compliance with applicable requirements of 40 CFR 63 Subpart ZZZZ by meeting the applicable requirements of 40 CFR 60 Subpart JJJJ.

NESHAP Subpart JJJJJJ - Industrial, Commercial, and Institutional Boilers

This MACT standard applies to industrial, commercial, and institutional boilers of various sizes and fuel types at area sources. The line heaters are natural gas-fired and are specifically exempt from this subpart. Therefore, no sources at the well pad are subject to any requirements under 40 CFR 63 Subpart JJJJJJ.

West Virginia SIP Regulations

The well pad is potentially subject to regulations contained in the West Virginia Code of State Regulations, Chapter 45 (Code of State Regulations). The Code of State Regulations fall under two main categories, those regulations that are generally applicable (e.g., permitting requirements), and those that have specific applicability (e.g., PM standards for manufacturing equipment).

45 CSR 2: To Prevent and Control Particulate Air Pollution from Combustion of Fuel in Indirect Heat Exchangers

45 CSR 2 applies to fuel burning units, defined as equipment burning fuel "for the primary purpose of producing heat or power by indirect heat transfer". The TEGs, line heaters and LPS heaters are fuel burning units and therefore must comply with this regulation. Per 45 CSR 2-3, opacity of emissions from units shall not exceed 10 percent.

45 CSR 4: To Prevent and Control the Discharge of Air Pollutants into the Air Which Causes or Contributes to an Objectionable Odor

According to 45 CSR 4-3:

No person shall cause, suffer, allow or permit the discharge of air pollutants which cause or contribute to an objectionable odor at any location occupied by the public.

The well pad is generally subject to this requirement. However, due to the nature of the process at the well pad, production of objectionable odor from the well pad during normal operation is unlikely.

45 CSR 6: To Prevent and Control the Air Pollution from the Combustion of Refuse

45 CSR 6 applies to activities involving incineration of refuse, defined as "the destruction of combustible refuse by burning in a furnace designed for that purpose. For the purposes of this rule, the destruction of any combustible liquid

or gaseous material by burning in a flare or flare stack, thermal oxidizer or thermal catalytic oxidizer stack shall be considered incineration." The enclosed combustors are incinerators and therefore must comply with this regulation. Per 45 CSR 6-4.3, opacity of emissions from this unit shall not exceed 20 percent, except as provided by 4.4. PM emissions from this unit will not exceed the levels calculated in accordance with 6-4.1.

45 CSR 16: Standards of Performance for New Stationary Sources

45 CSR 16-1 incorporates the federal Clean Air Act (CAA) standards of performance for new stationary sources set forth in 40 CPR Part 60 by reference. As such, by complying with all applicable requirements of 40 CFR Part 60 at the well pad, EQT will be complying with 45 CSR 16.

45 CSR 17: To Prevent and Control Particulate Matter Air Pollution from Materials Handling, Preparation, Storage and Other Sources of Fugitive Particulate Matter

According to 45 CSR 17-3.1:

No person shall cause, suffer, allow or permit fugitive particulate matter to be discharged beyond the boundary lines of the property lines of the property on which the discharge originates or at any public or residential location, which causes or contributes to statutory air pollution.

Due to the nature of the activities at the well pad, it is unlikely that fugitive particulate matter emissions will be emitted under normal operating conditions. However, EQT will take measures to ensure any fugitive particulate matter emissions will not cross the property boundary should any such emissions occur.

45 CSR 21-28: Petroleum Liquid Storage in Fixed Roof Tanks

45 CSR 21-28 applies to any fixed roof petroleum liquid storage tank with a capacity greater than 40,000 gallons. The capacity of each storage tank proposed for the well pad is less than 40,000 gallons; therefore, 45 CSR 21-28 will not apply to the petroleum liquid storage tanks at this well pad.

45 CSR 34: Emissions Standards for Hazardous Air Pollutants

45 CSR 34-1 incorporates the federal Clean Air Act (CAA) national emissions standards for hazardous air pollutants (NESHAPs) as set forth in 40 CPR Parts 61 and 63 by reference. As such, by complying with all applicable requirements of 40 CFR Parts 61 and 63 at the well pad, EQT will be complying with 45 CSR 34. Note that there are no applicable requirements under 40 CFR Parts 61 and 63 for the well pad.

Non-Applicability of Other SIP Rules

A thorough examination of the West Virginia SIP rules with respect to applicability at the well pad reveals many SIP regulations that do not apply or impose additional requirements on operations. Such SIP rules include those specific to a particular type of industrial operation that is categorically not applicable to the well pad.

ATTACHMENT E

Plot Plan

NOTE: This diagram is not to scale. Locations and distances between equipment are unknown at this time.

Entrance to PEN-15 pad

Tanks
400 bbl each
(12)

Sand Separator Tanks
140 bbl each

Wellheads
(10)

Vapor Recovery Unit

Back-up Vapor Recovery Unit
110 bhp

Thermoelectric Generators
24V each (3)

Low Pressure Separator Heater
1.00 MMBtu/hr

Low Pressure Separator Heater
1.00 MMBtu/hr

Line Heaters
(10)
1.54 MMBtu/hr each

Combustor
11.66
MMBTU/hr

Combustor
11.66
MMBTU/hr

Combustor
19.22
MMBTU/hr

Combustor
19.22
MMBTU/hr

ATTACHMENT E
PEN-15 Well Pad Plot Plan

ATTACHMENT F

Detailed Process Flow Diagram

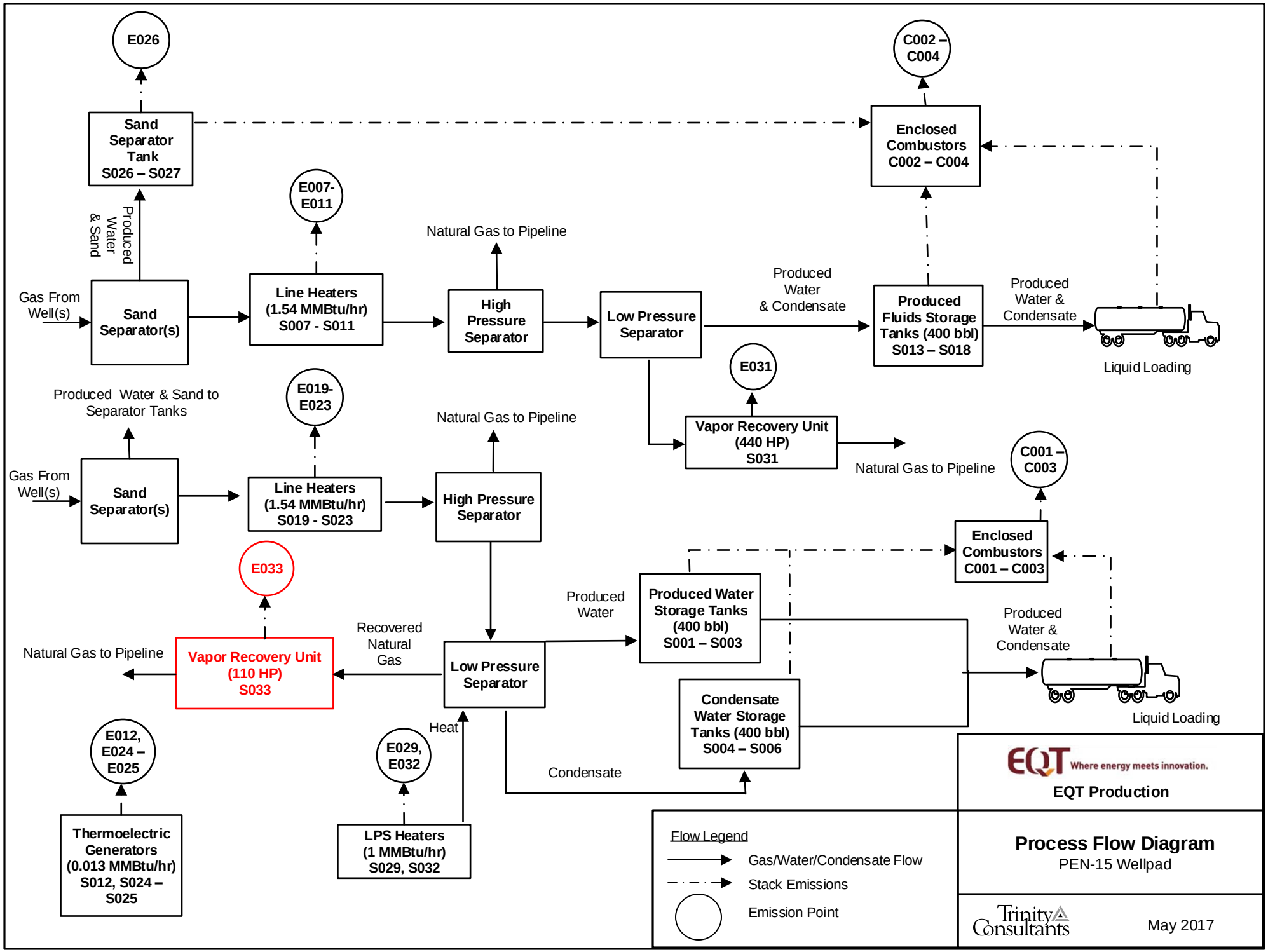
E026
C002 – C004
Sand Separator Tank S026 – S027
Enclosed Combustors C002 – C004
E007-E011
Natural Gas to Pipeline
Produced Water & Sand
Gas From Well(s)
Sand Separator(s)
Line Heaters (1.54 MMBtu/hr) S007 - S011
High Pressure Separator
Low Pressure Separator
Produced Water & Condensate
Produced Fluids Storage Tanks (400 bbl) S013 – S018
Produced Water & Condensate
Liquid Loading
E031
Vapor Recovery Unit (440 HP) S031
Natural Gas to Pipeline
Produced Water & Sand to Separator Tanks
E019-E023
Natural Gas to Pipeline
C001 – C003
Gas From Well(s)
Sand Separator(s)
Line Heaters (1.54 MMBtu/hr) S019 - S023
High Pressure Separator
Enclosed Combustors C001 – C003
E033
Produced Water
Produced Water Storage Tanks (400 bbl) S001 – S003
Produced Water & Condensate
Recovered Natural Gas
Natural Gas to Pipeline
Vapor Recovery Unit (110 HP) S033
Low Pressure Separator
Condensate Water Storage Tanks (400 bbl) S004 – S006
Liquid Loading
Heat
E012, E024 – E025
E029, E032
Condensate
Thermoelectric Generators (0.013 MMBtu/hr) S012, S024 – S025
LPS Heaters (1 MMBtu/hr) S029, S032
Flow Legend
Gas/Water/Condensate Flow
Stack Emissions
Emission Point
EQT Where energy meets innovation.
EQT Production
Process Flow Diagram
PEN-15 Wellpad
Trinity Consultants
May 2017

ATTACHMENT G

Process Description

ATTACHMENT G: PROCESS DESCRIPTION

EQT is submitting this application to install an additional natural gas fired VRU engine at the PEN-15 wellpad. The PEN-15 wellpad is an existing natural gas production facility that consists of ten (10) wells.

The incoming gas stream from the underground wells passes through a sand separator, where sand, water, and residual solids are displaced and transferred to the sand separator tanks. The gas stream will then pass through a line heater to raise/maintain temperature of the stream and prevent hydrate formation. The gas then flows into a high pressure separator which separates produced fluids (water and condensate) from the gas stream. The outlet gas stream from the high pressure separator flows into the sales pipeline to be transported downstream.

For one set of wells, the liquid stream from the high pressure separator flows into one of two low pressure separators where it is heated via low pressure separator heaters rated at 1 MMBtu/hr to volatilize (flash off) lighter hydrocarbons and separate condensate from water in the combined liquid stream. The flash gas from the condensate stream is recovered by the Vapor Recovery Unit (VRU), utilizing a natural gas-fired engine to raise the pressure of the flash gas and route it back into the natural gas pipeline. The condensate is then transferred to the condensate storage tanks and the produced water is transferred to the produced water tanks.

There are two (2) tank batteries at the PEN-15 wellpad. The first tank battery (six [6] produced fluids tank) stores condensate and water combined. The second tank battery (three (3) condensate tanks and three (3) produced water tanks) stores the condensate and produced water separately.

Once the tanks are filled, the contents are loaded into trucks for transport using vapor balanced loading. Vapors from the produced water tanks, the condensate tanks and liquid loading operations are controlled by the enclosed combustors.

Facility electricity is provided by thermoelectric generators. A process flow diagram is included as Attachment F.

ATTACHMENT I

Emission Units Table

Attachment I

Emission Units Table

(includes all emission units and air pollution control devices that will be part of this permit application review, regardless of permitting status)

Emission Unit ID[1]	Emission Point ID[2]	Emission Unit Description	Year Installed/ Modified	Design Capacity	Type[3] and Date of Change	Control Device[4]
S001	C001, C003	Produced Water Storage Tank	2013	400 bbl	Existing; No change	C001, C003
S002	C001, C003	Produced Water Storage Tank	2013	400 bbl	Existing; No change	C001, C003
S003	C001, C003	Produced Water Storage Tank	2013	400 bbl	Existing; No change	C001, C003
S004	C001, C003	Condensate Storage Tank	2013	400 bbl	Existing; No change	C001, C003
S005	C001, C003	Condensate Storage Tank	2013	400 bbl	Existing; No change	C001, C003
S006	C001, C003	Condensate Storage Tank	2013	400 bbl	Existing; No change	C001, C003
S007	E007	Line Heater	2013	1.54 MMBtu/hr	Existing; No change	None
S008	E008	Line Heater	2013	1.54 MMBtu/hr	Existing; No change	None
S009	E009	Line Heater	2013	1.54 MMBtu/hr	Existing; No change	None
S010	E010	Line Heater	2013	1.54 MMBtu/hr	Existing; No change	None
S011	E011	Line Heater	2013	1.54 MMBtu/hr	Existing; No change	None
S012	E012	Thermoelectric Generator	2013	0.013 MMBtu/hr	Existing; No change	None
S013	C002, C004	Produced Fluid Storage Tank	2014	400 bbl	Existing; No change	C002, C004
S014	C002, C004	Produced Fluid Storage Tank	2014	400 bbl	Existing; No change	C002, C004
S015	C002, C004	Produced Fluid Storage Tank	2014	400 bbl	Existing; No change	C002, C004
S016	C002, C004	Produced Fluid Storage Tank	2014	400 bbl	Existing; No change	C002, C004
S017	C002, C004	Produced Fluid Storage Tank	2014	400 bbl	Existing; No change	C002, C004
S018	C002, C004	Produced Fluid Storage Tank	2014	400 bbl	Existing; No change	C002, C004
S019	E019	Line Heater	2014	1.54 MMBtu/hr	Existing; No change	None

S020	E020	Line Heater	2014	1.54 MMBtu/hr	Existing; No change	None
S021	E021	Line Heater	2014	1.54 MMBtu/hr	Existing; No change	None
S022	E022	Line Heater	2014	1.54 MMBtu/hr	Existing; No change	None
S023	E023	Line Heater	2014	1.54 MMBtu/hr	Existing; No change	None
S024	E024	Thermoelectric Generator	2014	0.013 MMBtu/hr	Existing; No change	None
S025	E025	Thermoelectric Generator	2015	0.013 MMBtu/hr	Existing; No change	None
S026	E026	Sand Separator Tank	2015	140 bbl	Existing; No change	None
S027	C002, C004	Sand Separator Tank	2015	140 bbl	Existing; No change	C002, C004
S028	C001 – C004	Liquid Loading	2013	31,175,500 gal/yr	Existing – Increased Throughput	C001 – C004
S028	E028	Liquid Loading (Uncaptured)	2013	31,175,500 gal/yr	Existing – Increased Throughput	None
C001	C001	Combustor	2013	11.66 MMBTU/hr	Existing; No change	NA
C002	C002	Combustor	2014	11.66 MMBTU/hr	Existing; No change	NA
C003	C003	Combustor	2015	19.22 MMBTU/hr	Existing; No change	NA
C004	C004	Combustor	2015	19.22 MMBTU/hr	Existing; No change	NA
S029	E029	LPS Heater	2015	1 MMBtu/hr	Existing; No change	None
S030	E030	Ford VRU Engine	2016	110 HP	Removed	None
S031	E031	VRU Engine	2017	440 HP	Existing; No change	None
S032	E032	LPS Heater	2017	1 MMBtu/hr	Existing; No change	None
S033	E033	VRU Engine	TBD	110 HP	New	None

[1] For Emission Units (or Sources) use the following numbering system:1S, 2S, 3S,... or other appropriate designation.
[2] For Emission Points use the following numbering system:1E, 2E, 3E, ... or other appropriate designation.
[3] New, modification, removal
[4] For Control Devices use the following numbering system: 1C, 2C, 3C,... or other appropriate designation.

ATTACHMENT J

Emission Points Data Summary Sheet

Attachment J
EMISSION POINTS DATA SUMMARY SHEET

Table 1: Emissions Data

Emission Point ID No. *(Must match Emission Units Table & Plot Plan)*	Emission Point Type[1]	Emission Unit Vented Through This Point *(Must match Emission Units Table & Plot Plan)*		Air Pollution Control Device *(Must match Emission Units Table & Plot Plan)*		Vent Time for Emission Unit *(chemical processes only)*		All Regulated Pollutants - Chemical Name/CAS[3] *(Speciate VOCs & HAPS)*	Maximum Potential Uncontrolled Emissions [4]		Maximum Potential Controlled Emissions [5]		Emission Form or Phase *(At exit conditions, Solid, Liquid or Gas/Vapor)*	Est. Method Used [6]	Emission Concentration [7] (ppmv or mg/m^4)
		ID No.	Source	ID No.	Device Type	Short Term[2]	Max (hr/yr)		lb/hr	ton/yr	lb/hr	ton/yr			
C001	Upward Vert Stack	S001-S006, S028	Produced water/ condensate tanks, liquid loading	C001	Enclosed Combustor			NO_X	1.15	5.03	1.15	5.03	Gas	BRE ProMax	
								CO	0.96	4.22	0.96	4.22			
								VOC	197.5	129.1	1.63	1.98			
								SO_2	0.01	0.03	0.01	0.03			
								PM_{10}	0.09	0.38	0.09	0.38			
								$PM_{2.5}$	0.09	0.38	0.09	0.38			
								CO_2e	1,407	6,162	1,371	6,007			
								HAP	10.2	7.36	0.09	0.12			
								Toluene	0.19	0.15	<0.01	<0.01			
								n-hexane	9.91	7.08	0.08	0.11			
C002	Upward Vert Stack	S013-S018, S027, S028	Produced water/ Condensate tanks, liquid loading	C002	Enclosed Combustor			NO_X	1.15	5.03	1.15	5.03	Gas	BRE ProMax	
								CO	0.96	4.22	0.96	4.22			
								VOC	197.5	129.1	1.63	1.98			
								SO_2	0.01	0.03	0.01	0.03			
								PM_{10}	0.09	0.38	0.09	0.38			
								$PM_{2.5}$	0.09	0.38	0.09	0.38			
								CO_2e	1,407	6,162	1,371	6,007			
								HAP	10.2	7.36	0.09	0.12			
								Toluene	0.19	0.15	<0.01	<0.01			
								n-hexane	9.91	7.08	0.08	0.11			
C003	Upward Vert Stack	S001-S006, S028	Produced fluids storage tanks, sand separator tank, liquid loading	C003	Enclosed Combustor			NO_X	1.89	8.28	1.89	8.28	Gas	BRE ProMax	
								CO	1.59	6.95	1.59	6.95			
								VOC	197.5	129.1	1.65	2.08			
								SO_2	0.01	0.05	0.01	0.05			
								PM_{10}	0.14	0.63	0.14	0.63			
								$PM_{2.5}$	0.14	0.63	0.14	0.63			
								CO_2e	3,048	13,350	2,257	9,884			
								HAP	10.2	7.36	0.09	0.12			
								Toluene	0.19	0.15	<0.01	0.01			
								n-hexane	9.91	7.08	0.08	0.11			
C004	Upward Vert Stack	S013-S018, S027, S028	Produced fluids storage tanks, sand separator tank, liquid loading	C004	Enclosed Combustor			NO_X	1.89	8.28	1.89	8.28	Gas	BRE ProMax	
								CO	1.59	6.95	1.59	6.95			
								VOC	197.5	129.1	1.65	2.08			
								SO_2	0.01	0.05	0.01	0.05			
								PM_{10}	0.14	0.63	0.14	0.63			
								$PM_{2.5}$	0.14	0.63	0.14	0.63			
								CO_2e	3,048	13,350	2,257	9,884			
								HAP	10.2	7.36	0.09	0.12			
								Toluene	0.19	0.15	<0.01	0.01			
								n-hexane	9.91	7.08	0.08	0.11			

E007-E023 (each)	Upward Vert Stack	S007-S023	Line Heaters	N/A	N/A			NO_X CO VOC SO_2 PM_{10} $PM_{2.5}$ CO_2e HAP	0.15 0.12 0.01 <0.01 0.01 0.01 180 <0.01	0.64 0.54 0.04 <0.01 0.05 0.05 789 0.01	0.15 0.12 0.01 <0.01 0.01 0.01 180 <0.01	0.64 0.54 0.04 <0.01 0.05 0.05 789 0.01	Gas	AP-42	
E029, E032 (each)	Upward Vert Stack	S029, S032	LPS Heater	N/A	N/A			NO_X CO VOC SO_2 PM_{10} $PM_{2.5}$ CO_2e HAP	0.10 0.08 0.01 <0.01 0.01 0.01 117 <0.01	0.42 0.35 0.02 <0.01 0.03 0.03 513 0.01	0.10 0.08 0.01 <0.01 0.01 0.01 117 <0.01	0.42 0.35 0.02 <0.01 0.03 0.03 513 0.01	Gas	AP-42	
E012, E024-E025 (each)	Upward Vert Stack	S012, S024-S025	TEG	N/A	N/A			NO_X CO_2e	<0.01 1.52	<0.01 6.64	<0.01 1.52	<0.01 6.64	Gas	AP-42	
E026	Upward Vert Stack	S026	Sand Trap tank	N/A	N/A			VOC CO_2e HAP	0.05 0.15 <0.01	0.20 0.70 0.01	0.05 0.15 <0.01	0.20 0.70 0.01	Gas	E&P Tank	
E031	Upward Vert Stack	S031	Caterpillar Vapor Recovery Unit (VRU)	N/A	N/A			NO_X CO VOC SO_2 PM_{10} $PM_{2.5}$ CO_2e HAP	1.94 1.26 0.33 <0.01 0.06 0.06 395 0.10	8.50 5.52 1.42 0.01 0.26 0.26 1,731 0.44	1.94 1.26 0.33 <0.01 0.06 0.06 395 0.10	8.50 5.52 1.42 0.01 0.26 0.26 1,731 0.44	Gas	AP-42, Manufacturer Specs	
E033	Upward Vert Stack	S033	EDI Vapor Recovery Unit (VRU)	N/A	N/A			NO_X CO VOC SO_2 PM_{10} $PM_{2.5}$ CO_2e HAP	0.24 0.49 0.18 <0.01 0.01 0.01 84 0.02	1.06 2.12 0.81 <0.01 0.06 0.06 367 0.10	0.24 0.49 0.18 <0.01 0.01 0.01 84 0.02	1.06 2.12 0.81 <0.01 0.06 0.06 367 0.10	Gas	AP-42, Manufacturer Specs	
E028	Fugitive	S028	Uncaptured liquid loading	N/A	N/A			VOC HAP n-Hexane	357.34 18.12 17.62	92.91 4.71 4.58	107.20 5.44 5.29	27.87 1.41 1.37	Gas	BRE ProMax	

*Note – Only pollutants with controlled emissions > 0.01 tpy are presented in this table.

The EMISSION POINTS DATA SUMMARY SHEET provides a summation of emissions by emission unit. Note that uncaptured process emission unit emissions are not typically considered to be fugitive and must be accounted for on the appropriate EMISSIONS UNIT DATA SHEET and on the EMISSION POINTS DATA SUMMARY SHEET. Please note that total emissions from the source are equal to all vented emissions, all fugitive emissions, plus all other emissions (e.g. uncaptured emissions). Please complete the FUGITIVE EMISSIONS DATA SUMMARY SHEET for fugitive emission activities.

[1] Please add descriptors such as upward vertical stack, downward vertical stack, horizontal stack, relief vent, rain cap, etc.

[2] Indicate by "C" if venting is continuous. Otherwise, specify the average short-term venting rate with units, for intermittent venting (ie., 15 min/hr). Indicate as many rates as needed to clarify frequency of venting (e.g., 5 min/day, 2 days/wk).

[3] List all regulated air pollutants. Speciate VOCs, including all HAPs. Follow chemical name with Chemical Abstracts Service (CAS) number. **LIST** Acids, CO, CS_2, VOCs, H_2S, Inorganics, Lead, Organics, O_3, NO, NO_2, SO_2, SO_3, all applicable Greenhouse Gases (including CO_2 and methane), etc. **DO NOT LIST** H_2, H_2O, N_2, O_2, and Noble Gases.

[4] Give maximum potential emission rate with no control equipment operating. If emissions occur for less than 1 hr, then record emissions per batch in minutes (e.g. 5 lb VOC/20 minute

batch).

[5] Give maximum potential emission rate with proposed control equipment operating. If emissions occur for less than 1 hr, then record emissions per batch in minutes (e.g. 5 lb VOC/20 minute batch).

[6] Indicate method used to determine emission rate as follows: MB = material balance; ST = stack test (give date of test); EE = engineering estimate; O = other (specify).

[7] Provide for all pollutant emissions. Typically, the units of parts per million by volume (ppmv) are used. If the emission is a mineral acid (sulfuric, nitric, hydrochloric or phosphoric) use units of milligram per dry cubic meter (mg/m^3) at standard conditions (68 °F and 29.92 inches Hg) (see 45CSR7). If the pollutant is SO_2, use units of ppmv (See 45CSR10).

Attachment J
EMISSION POINTS DATA SUMMARY SHEET

Table 2: Release Parameter Data								
Emission Point ID No. *(Must match Emission Units Table)*	Inner Diameter (ft.)	Exit Gas			Emission Point Elevation (ft)		UTM Coordinates (km)	
		Temp. (°F)	Volumetric Flow [1] (acfm) *at operating conditions*	Velocity (fps)	Ground Level *(Height above mean sea level)*	Stack Height [2] *(Release height of emissions above ground level)*	Northing	Easting
No change								

[1] Give at operating conditions. Include inerts.
[2] Release height of emissions above ground level.

ATTACHMENT K

Fugitive Emissions Data Summary Sheet

Attachment K

FUGITIVE EMISSIONS DATA SUMMARY SHEET

The FUGITIVE EMISSIONS SUMMARY SHEET provides a summation of fugitive emissions. Fugitive emissions are those emissions which could not reasonably pass through a stack, chimney, vent or other functionally equivalent opening. Note that uncaptured process emissions are not typically considered to be fugitive, and must be accounted for on the appropriate EMISSIONS UNIT DATA SHEET and on the EMISSION POINTS DATA SUMMARY SHEET.

Please note that total emissions from the source are equal to all vented emissions, all fugitive emissions, plus all other emissions (e.g. uncaptured emissions).

APPLICATION FORMS CHECKLIST - FUGITIVE EMISSIONS
1.) Will there be haul road activities? ☐ Yes ☒ No (no change to existing) ☐ If YES, then complete the HAUL ROAD EMISSIONS UNIT DATA SHEET.
2.) Will there be Storage Piles? ☐ Yes ☒ No ☐ If YES, complete Table 1 of the NONMETALLIC MINERALS PROCESSING EMISSIONS UNIT DATA SHEET.
3.) Will there be Liquid Loading/Unloading Operations? ☒ Yes (No Emissions Increase) ☐ No ☐ If YES, complete the BULK LIQUID TRANSFER OPERATIONS EMISSIONS UNIT DATA SHEET.
4.) Will there be emissions of air pollutants from Wastewater Treatment Evaporation? ☐ Yes ☒ No ☐ If YES, complete the GENERAL EMISSIONS UNIT DATA SHEET.
5.) Will there be Equipment Leaks (e.g. leaks from pumps, compressors, in-line process valves, pressure relief devices, open-ended valves, sampling connections, flanges, agitators, cooling towers, etc.)? ☒ Yes ☐ No ☐ If YES, complete the LEAK SOURCE DATA SHEET section of the CHEMICAL PROCESSES EMISSIONS UNIT DATA SHEET.
6.) Will there be General Clean-up VOC Operations? ☐ Yes ☒ No ☐ If YES, complete the GENERAL EMISSIONS UNIT DATA SHEET.
7.) Will there be any other activities that generate fugitive emissions? ☐ Yes ☒ No ☐ If YES, complete the GENERAL EMISSIONS UNIT DATA SHEET or the most appropriate form.
If you answered “NO” to all of the items above, it is not necessary to complete the following table, “Fugitive Emissions Summary.”

FUGITIVE EMISSIONS SUMMARY	All Regulated Pollutants - Chemical Name/CAS [1]	Maximum Potential Uncontrolled Emissions [2]		Maximum Potential Controlled Emissions [3]		Est. Method Used [4]
		lb/hr	ton/yr	lb/hr	ton/yr	
Haul Road/Road Dust Emissions Paved Haul Roads	NA	---	---	---	---	---
Unpaved Haul Roads	PM PM_{10} $PM_{2.5}$	---	16.78 4.28 0.43	---	16.78 4.28 0.43	C
Storage Pile Emissions	NA	---	---	---	---	---
Loading/Unloading Operations (Uncaptured Emissions)	VOC HAP Benzene Toluene Xylene n-hexane	357.34 18.12 0.19 0.33 0.16 17.62	92.91 4.71 0.05 0.08 0.04 4.58	107.20 5.44 0.06 0.10 0.05 5.29	27.87 1.41 0.01 0.03 0.01 1.37	B
Wastewater Treatment Evaporation & Operations	NA	---	---	---	---	---
Equipment Leaks	VOC HAP CO_2e Benzene Toluene Xylene n-hexane	N/A	22.61 0.96 499.83 0.01 0.03 0.04 0.35	N/A	22.61 0.96 499.83 0.01 0.03 0.04 0.35	A
General Clean-up VOC Emissions	NA	---	---	---	---	---
Venting Emissions	VOC HAP CO_2e Benzene Toluene Xylene n-hexane	N/A	3.67 0.16 426.68 <0.01 0.01 0.01 0.06	N/A	3.67 0.16 426.68 <0.01 0.01 0.01 0.06	EE

A –*Protocol for Equipment Leak Emission Estimates*, EPA 453/R-95-017, Table 2-1, November 1995. 40 CFR 98 Subpart W.
B- Bryan Research Engineering ProMax Software
C – AP-42 Chapter 13

[1] List all regulated air pollutants. Speciate VOCs, including all HAPs. Follow chemical name with Chemical Abstracts Service (CAS) number. LIST Acids, CO, CS_2, VOCs, H_2S, Inorganics, Lead, Organics, O_3, NO, NO_2, SO_2, SO_3, all applicable Greenhouse Gases (including CO_2 and methane), etc. DO NOT LIST H_2, H_2O, N_2, O_2, and Noble Gases.

[2] Give rate with no control equipment operating. If emissions occur for less than 1 hr, then record emissions per batch in minutes (e.g. 5 lb VOC/20 minute batch).

[3] Give rate with proposed control equipment operating. If emissions occur for less than 1 hr, then record emissions per batch in minutes (e.g. 5 lb VOC/20 minute batch).

[4] Indicate method used to determine emission rate as follows: MB = material balance; ST = stack test (give date of test); EE = engineering estimate; O = other (specify).

ATTACHMENT L

Emissions Unit Data Sheet

Attachment L
EMISSIONS UNIT DATA SHEET
GENERAL

To be used for affected sources other than asphalt plants, foundries, incinerators, indirect heat exchangers, and quarries.

Identification Number (as assigned on *Equipment List Form*): S033

1. Name or type and model of proposed affected source:

   Vapor Recovery Unit Engine – One (1) Ford CSG-637 natural gas fired engine

2. On a separate sheet(s), furnish a sketch(es) of this affected source. If a modification is to be made to this source, clearly indicated the change(s). Provide a narrative description of all features of the affected source which may affect the production of air pollutants.

3. Name(s) and maximum amount of proposed process material(s) charged per hour:

   NA

4. Name(s) and maximum amount of proposed material(s) produced per hour:

   Does not produce any materials. Recovers flash gas from storage vessels and compresses flash gas to pipeline.

5. Give chemical reactions, if applicable, that will be involved in the generation of air pollutants:

   Internal combustion of natural gas.

* The identification number which appears here must correspond to the air pollution control device identification number appearing on the *List Form*.

6. Combustion Data (if applicable):

(a) Type and amount in appropriate units of fuel(s) to be burned:

Pipeline quality natural gas – 682 scf/hr, 6.0MMscf/yr (each engine)

(b) Chemical analysis of proposed fuel(s), excluding coal, including maximum percent sulfur and ash:

Natural gas with negligible H_2S and ash content.

(c) Theoretical combustion air requirement (ACF/unit of fuel):

@ °F and psia.

(d) Percent excess air: Unknown

(e) Type and BTU/hr of burners and all other firing equipment planned to be used:

0.72 MMBtu/h4 four stroke rich burn spark ignition engine

(f) If coal is proposed as a source of fuel, identify supplier and seams and give sizing of the coal as it will be fired:

NA

(g) Proposed maximum design heat input: 0.72 × 10^6 BTU/hr.

7. Projected operating schedule:

Hours/Day	24	Days/Week	7	Weeks/Year	52

8. Projected amount of pollutants that would be emitted from this affected source if no control devices were used:

@ 857 °F and 14.7 psia

a.	NO_X	0.24	lb/hr	grains/ACF
b.	SO_2	<0.01	lb/hr	grains/ACF
c.	CO	0.49	lb/hr	grains/ACF
d.	PM_{10}	0.01	lb/hr	grains/ACF
e.	Hydrocarbons		lb/hr	grains/ACF
f.	VOCs (Includes CH2O)	0.18	lb/hr	grains/ACF
g.	Pb	NA	lb/hr	grains/ACF
h.	Specify other(s)			
	Benzene	1.1E-03	lb/hr	grains/ACF
	Toluene	4.0E-04	lb/hr	grains/ACF
	Xylene	1.4E-04	lb/hr	grains/ACF
	Formaldehyde	0.01	lb/hr	grains/ACF

NOTE: (1) An Air Pollution Control Device Sheet must be completed for any air pollution device(s) used to control emissions from this affected source.

(2) Complete the Emission Points Data Sheet.

9. Proposed Monitoring, Recordkeeping, Reporting, and Testing
Please propose monitoring, recordkeeping, and reporting in order to demonstrate compliance with the proposed operating parameters. Please propose testing in order to demonstrate compliance with the proposed emissions limits.

MONITORING	RECORDKEEPING
Hours of Operation	Maintain records of maintenance conducted on the engine Maintain records of the amount of natural gas consumed in each engine Maintain documentation that the engine meets the emission standards of 40 CFR 60.4233(e) Maintain records of the hours of operation of each engine
REPORTING	TESTING
None	None

MONITORING. PLEASE LIST AND DESCRIBE THE PROCESS PARAMETERS AND RANGES THAT ARE PROPOSED TO BE MONITORED IN ORDER TO DEMONSTRATE COMPLIANCE WITH THE OPERATION OF THIS PROCESS EQUIPMENT OPERATION/AIR POLLUTION CONTROL DEVICE.

RECORDKEEPING. PLEASE DESCRIBE THE PROPOSED RECORDKEEPING THAT WILL ACCOMPANY THE MONITORING.

REPORTING. PLEASE DESCRIBE THE PROPOSED FREQUENCY OF REPORTING OF THE RECORDKEEPING.

TESTING. PLEASE DESCRIBE ANY PROPOSED EMISSIONS TESTING FOR THIS PROCESS EQUIPMENT/AIR POLLUTION CONTROL DEVICE.

10. Describe all operating ranges and maintenance procedures required by Manufacturer to maintain warranty
See attached manufacturer specification sheet

Installation Drawings

Front End View

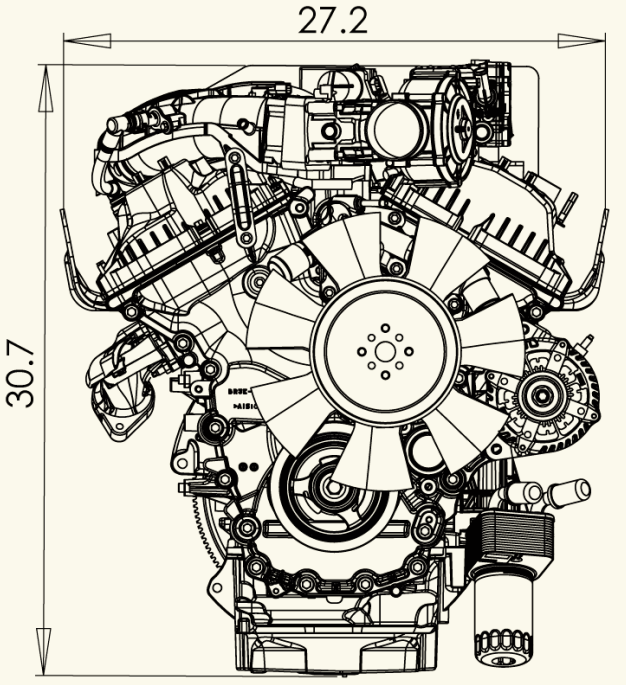

Left Side View

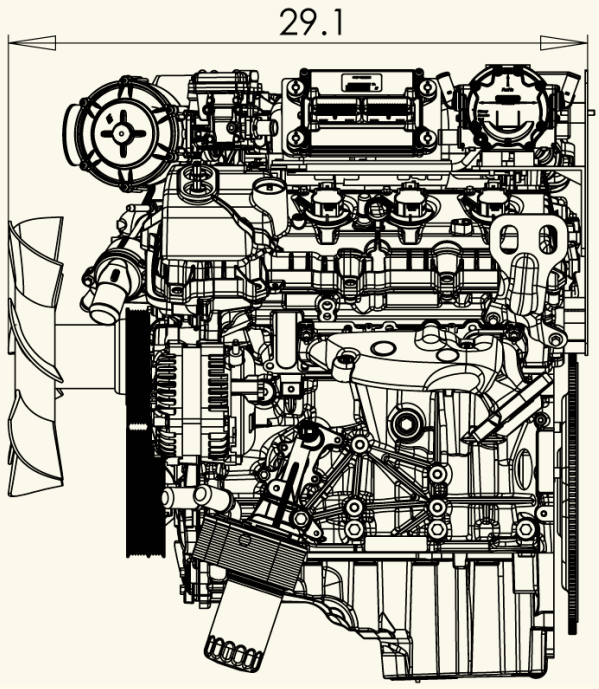

Power Curves (corrected per SAE J1349)

Gasoline

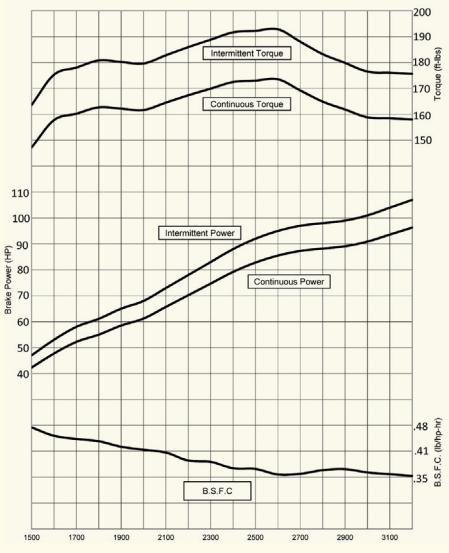

Natural Gas

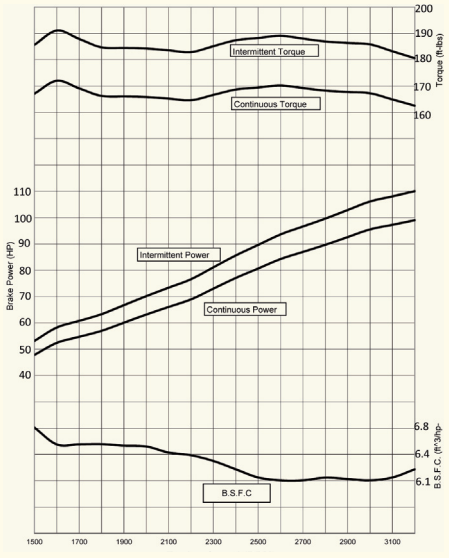

Liquefied Petroleum Gas

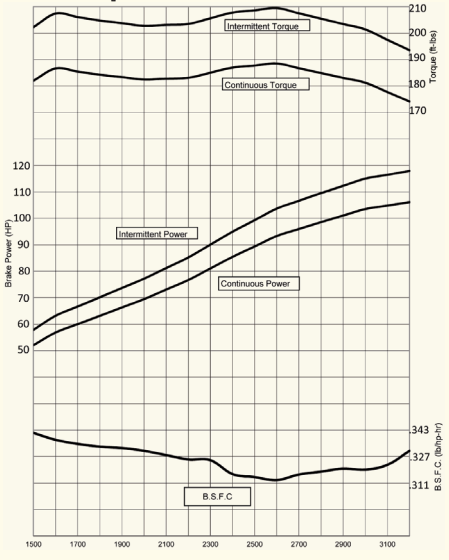

Ford Power Products

Powertrain Assemblies & Components Provided By Ford Component Sales

For additional information Contact:

ENGINE DISTRIBUTORS INC.

400 University Ct • Blackwood NJ 08012
856/228-7298 • Fax:856/228-5531
www.edi-dist.com

CSG-637 EFI

3.7 Liter
6-Cylinder

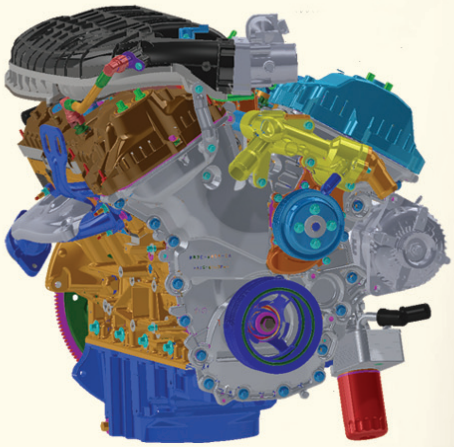

Options

Engine Cooling Fans
- 14" (355mm) diameter suction
- 14" (355mm) diameter pusher

Flywheels
- 11.5" (292mm) SAE over-center clutch
- flat face flywheel

Flywheel Housings
- SAE #3

Exhaust Manifold
- rear dump down

Power Steering Pump
Air Conditioning
Wiring Harnesses
Discrete Speed Switch
Variable Speed Hand Throttle
Variable Speed Foot Pedal
Engine Mounts
- Automotive with insulators
- Open power unit

Electronic Instrument Panel, Gauges
Three Way Catalyst / Muffler Standard

Transmissions

6R80 electronic shift

Emissions Information

California Air Resources Board (CARB)
Environmental Protection Agency (EPA)
Emission Certified Packages

Warranty

Contact Engine Distributors, Inc
for warranty details.

Power Products

Powertrain Assemblies & Components Provided By Ford Component Sales

Specifications

Engine Type	V-6
Bore and Stroke	3.7" x 3.4" (94mm x 86mm)
Displacement	3.7L Liter (225.7 CID)
Compression Ratio	10.5:1
Oil Capacity	6 qts. including filter
Net Weight	355 Lbs. with accessories (161 Kgs.)
Dimensions	L 25.4" x W 29.5" x H 29.4" (646 mm x 751 mm x 748 mm)

Gasoline (corrected per SAE J1349)

Unleaded 87 or 89 octane

Intermittent Power	107 [HP] @ 3200rpm	(80 [kW] @ 3200rpm)
Continuous Power	96 [HP] @ 3200rpm	(72 [kW] @ 3200rpm)
Intermittent Torque	193 [ft-lbs] @ 2600rpm	(261 [N-m] @ 2600rpm)
Continuous Torque	173 [ft-lbs] @ 2600rpm	(235 [N-m] @ 3200rpm)

Natural Gas (corrected per SAE J1349)

Fuel Specification	1050 BTU/FT3	
Intermittent Power	110 [HP] @ 3200rpm	(82 [kW] @ 3200rpm)
Continuous Power	99 [HP] @ 3200rpm	(74 [kW] @ 3200rpm)
Intermittent Torque	191 [ft-lbs] @1600rpm	(259 [N-m] @ 1600rpm)
Continuous Torque	172 [ft-lbs] @1600rpm	(233 [N-m] @ 1600rpm)

Liquefied Petroleum Gas (corrected per SAE J1349)

Fuel Specification	HD-5	
Intermittent Power	118 [HP] @ 3200rpm	(88 [kW] @ 3200rpm)
Continuous Power	106 [HP] @ 3200rpm	(79 [kW] @ 3200rpm)
Intermittent Torque	209 [ft-lbs] @ 2600rpm	(284 [N-m] @ 2600rpm)
Continuous Torque	188 [ft-lbs] @ 2600rpm	(255 [N-m] @ 2600rpm)

Standard Features / Benefits

Set-for-life valvetrain

Deep skirted, ribbed cylinder block casting for rigidity

150 AMP Alternator

Aluminum cylinder block and heads.

Chain driven dual camshafts with automatic tensioning system

Structural front cover and deep sump oil pan

Alternate fuel ready valvetrain components

Individual coil on plug electronic ignition

Four main bolts with side bolts through block for strength and durability

Gasoline Sequential Port Fuel Injection

Closed loop fuel control for all fuels

Electronic engine management system with built-in engine protection against detonation, high coolant temperature, low oil pressure, over speed shutdown and starter lockout

Next generation governing – discrete speeds, variable speeds, drive by wire – using the highest quality components.

Variable CAM Timing for intake camshafts - advances or retards timing to maximize engine power and fuel efficiency

Forged steel crankshaft

UNITED STATES ENVIRONMENTAL PROTECTION AGENCY
2015 MODEL YEAR
CERTIFICATE OF CONFORMITY
WITH THE CLEAN AIR ACT

OFFICE OF TRANSPORTATION AND AIR QUALITY
ANN ARBOR, MICHIGAN 48105

Certificate Issued To: **Engine Distributors, Inc.**
(U.S. Manufacturer or Importer)

Certificate Number: FEDIB03.7CSG-006

Effective Date: 06/08/2015

Expiration Date: 12/31/2015

Byron J. Bunker, Division Director
Compliance Division

Issue Date: 06/08/2015

Revision Date: N/A

Manufacturer: Engine Distributors, Inc.
Engine Family: FEDIB03.7CSG
Mobile/Stationary Certification Type: Mobile and Stationary
Fuel : LPG/Propane
Gasoline (up to and including 10% Ethanol)
Natural Gas (CNG/LNG)
Emission Standards :
Mobile Part 1048
HC + NOx (g/kW-hr) : 0.8
NMHC + NOx (g/kW-hr) : 0.8
CO (g/kW-hr) : 20.6
Part 60 Subpart JJJ Table 1
NOx (g/kW-hr) : 1.3
HC + NOx (g/kW-hr) : 0.8
CO (g/kW-hr) : 2.7
CO (g/kW-hr) : 20.6
VOC (g/kW-hr) : 0.9
Emergency Use Only : N

Pursuant to Section 213 of the Clean Air Act (42 U.S.C. section 7547) and 40 CFR Part 60, 40 CFR Part 1048, 1065, 1068, and 60 (stationary only and combined stationary and mobile) and subject to the terms and conditions prescribed in those provisions, this certificate of conformity is hereby issued with respect to the test engines which have been found to conform to applicable requirements and which represent the following nonroad engines, by engine family, more fully described in the documentation required by 40 CFR Part 60, 40 CFR Part 1048 and produced in the stated model year.

This certificate of conformity covers only those new nonroad spark-ignition engines which conform in all material respects to the design specifications that applied to those engines described in the documentation required by 40 CFR Part 60, 40 CFR Part 1048 and which are produced during the model year stated on this certificate of the said manufacturer, as defined in 40 CFR Part 60, 40 CFR Part 1048. This certificate of conformity does not cover nonroad engines imported prior to the effective date of the certificate.

It is a term of this certificate that the manufacturer shall consent to all inspections described in 40 CFR 1068.20 and authorized in a warrant or court order. Failure to comply with the requirements of such a warrant or court order may lead to revocation or suspension of this certificate for reasons specified in 40 CFR Part 60, 40 CFR Part 1048. It is also a term of this certificate that this certificate may be revoked or suspended or rendered void *ab initio* for other reasons specified in 40 CFR Part 60, 40 CFR Part 1048.

This certificate does not cover large nonroad engines sold, offered for sale, or introduced, or delivered for introduction, into commerce in the U.S. prior to the effective date of the certificate.

ATTACHMENT M

Air Pollution Control Devices – *Not Applicable*

ATTACHMENT N

Supporting Emission Calculations

Company Name: EQT Production, LLC
Facility Name: PEN15 Wellpad
Project Description: R13 Application

Facility-Wide Emission Summary - Controlled

Wells	10	per pad
Storage Tanks	12	per pad
Sand Separator Tank	2	per pad
Line Heaters	10	per pad
TEGs	3	per pad
Dehy Reboiler	0	per pad
Glycol Dehy	0	per pad
Dehy Drip Tank	0	per pad
Dehy Combustor	0	per pad
Compressor	0	per pad
High Pressure Separator	10	per pad
Low Pressure Separator	2	per pad
Vapor Recovery Unit	2	per pad
Tank Combustor - 11.66 MMBtu/hr	2	per pad
Tank Combustor - 19.22 MMBtu/hr	2	per pad
Length of lease road	2,630	feet

Carbon equivalent emissions (CO_2e) are based on the following Global Warming Potentials (GWP) from 40 CFR Part 98, Table A-1:

CO_2	1
CH_4	25
N_2O	298

Emission Point ID #	Emission Source ID#s	Emission Source Description	NO_x		CO		VOC		SO_2		PM_{10}		$PM_{2.5}$		CH4		CO_2e	
			lb/hr	tpy	lb/hr	tpy	lb/hr	tpy	lb/hr	tpy	lb/hr	tpy	lb/hr	tpy	lb/hr	tpy	lb/hr	tpy
		Produced Water/Condensate																
C001, C003	S001-S006	Storage Tanks	---	---	---	---	0.75	3.31	---	---	---	---	---	---	0.03	0.13	0.75	3.30
C002, C004	S013-S018	Produced Fluids Storage Tanks	---	---	---	---	0.75	3.31	---	---	---	---	---	---	0.03	0.13	0.75	3.30
C001-C004	S028	Captured Liquid Loading	---	---	---	---	5.00	1.30	---	---	---	---	---	---			---	---
C002, C004	S027	Sand Separator Tank	---	---	---	---	0.05	0.20	---	---	---	---	---	---	0.01	0.03	0.15	0.70
C001	C001	Tank Combustor	1.15	5.03	0.96	4.22	2.8E-04	1.2E-03	0.01	0.03	0.09	0.38	0.09	0.38	0.00	0.00	1371.10	6005.43
C002	C002	Tank Combustor	1.15	5.03	0.96	4.22	2.8E-04	1.2E-03	0.01	0.03	0.09	0.38	0.09	0.38	0.00	0.00	1371.10	6005.43
C003	C003	Tank Combustor	1.89	8.28	1.59	6.95	2.8E-04	1.2E-03	0.01	0.05	0.14	0.63	0.14	0.63	0.00	0.00	2256.10	9881.72
C004	C004	Tank Combustor	1.89	8.28	1.59	6.95	2.8E-04	1.2E-03	0.01	0.05	0.14	0.63	0.14	0.63	0.00	0.00	2256.10	9881.72
C001	**S001-S006, S028, C001**	**---**	**1.15**	**5.03**	**0.96**	**4.22**	**1.63**	**1.98**	**0.01**	**0.03**	**0.09**	**0.38**	**0.09**	**0.38**	---	---	**1371.48**	**6007.08**
C002	**S013-S018, S027, S028, C002**	**---**	**1.15**	**5.03**	**0.96**	**4.22**	**1.63**	**1.98**	**0.01**	**0.03**	**0.09**	**0.38**	**0.09**	**0.38**	---	---	**1371.48**	**6007.08**
C003	**S001-S006, S028, C003**	**---**	**1.89**	**8.28**	**1.59**	**6.95**	**1.65**	**2.08**	**0.01**	**0.05**	**0.14**	**0.63**	**0.14**	**0.63**	---	---	**2256.55**	**9883.72**
C004	**S013-S018, S027, S028, C004**	**---**	**1.89**	**8.28**	**1.59**	**6.95**	**1.65**	**2.08**	**0.01**	**0.05**	**0.14**	**0.63**	**0.14**	**0.63**	---	---	**2256.55**	**9883.72**
E007	S007	Line Heater	0.15	0.64	0.12	0.54	0.01	0.04	8.8E-04	3.9E-03	0.01	0.05	0.01	0.05	0.00	0.01	180.18	789.20
E008	S008	Line Heater	0.15	0.64	0.12	0.54	0.01	0.04	8.8E-04	3.9E-03	0.01	0.05	0.01	0.05	0.00	0.01	180.18	789.20
E009	S009	Line Heater	0.15	0.64	0.12	0.54	0.01	0.04	8.8E-04	3.9E-03	0.01	0.05	0.01	0.05	0.00	0.01	180.18	789.20
E010	S010	Line Heater	0.15	0.64	0.12	0.54	0.01	0.04	8.8E-04	3.9E-03	0.01	0.05	0.01	0.05	0.00	0.01	180.18	789.20
E011	S011	Line Heater	0.15	0.64	0.12	0.54	0.01	0.04	8.8E-04	3.9E-03	0.01	0.05	0.01	0.05	0.00	0.01	180.18	789.20
E019	S019	Line Heater	0.15	0.64	0.12	0.54	0.01	0.04	8.8E-04	3.9E-03	0.01	0.05	0.01	0.05	0.00	0.01	180.18	789.20
E020	S020	Line Heater	0.15	0.64	0.12	0.54	0.01	0.04	8.8E-04	3.9E-03	0.01	0.05	0.01	0.05	0.00	0.01	180.18	789.20
E021	S021	Line Heater	0.15	0.64	0.12	0.54	0.01	0.04	8.8E-04	3.9E-03	0.01	0.05	0.01	0.05	0.00	0.01	180.18	789.20
E022	S022	Line Heater	0.15	0.64	0.12	0.54	0.01	0.04	8.8E-04	3.9E-03	0.01	0.05	0.01	0.05	0.00	0.01	180.18	789.20
E023	S023	Line Heater	0.15	0.64	0.12	0.54	0.01	0.04	8.8E-04	3.9E-03	0.01	0.05	0.01	0.05	0.00	0.01	180.18	789.20
E029	S029	LPS Heater	0.10	0.42	0.08	0.35	0.01	0.02	5.7E-04	2.5E-03	0.01	0.03	0.01	0.03	0.00	0.01	117.12	512.98
E032	S032	LPS Heater	0.10	0.42	0.08	0.35	0.01	0.02	5.7E-04	2.5E-03	0.01	0.03	0.01	0.03	0.00	0.01	117.12	512.98
E012	S012	TEG	1.2E-03	0.01	1.0E-03	4.5E-03	6.8E-05	3.0E-04	7.4E-06	3.2E-05	9.4E-05	4.1E-04	9.4E-05	4.1E-04	0.00	0.00	1.52	6.64
E024	S024	TEG	1.2E-03	0.01	1.0E-03	4.5E-03	6.8E-05	3.0E-04	7.4E-06	3.2E-05	9.4E-05	4.1E-04	9.4E-05	4.1E-04	0.00	0.00	1.52	6.64
E025	S025	TEG	1.2E-03	0.01	1.0E-03	4.5E-03	6.8E-05	3.0E-04	7.4E-06	3.2E-05	9.4E-05	4.1E-04	9.4E-05	4.1E-04	0.00	0.00	1.52	6.64
E026	S026	Sand Separator Tank	---	---	---	---	0.05	0.20	---	---	---	---	---	---	0.01	0.03	0.15	0.70
E031	S031	VRU Engine	1.94	8.50	1.26	5.52	0.33	1.42	1.8E-03	0.01	0.06	0.26	0.06	0.26	1.39	6.08	395.23	1731.12
E033	S033	VRU Engine	0.24	1.06	0.49	2.12	0.18	0.81	4.2E-04	1.8E-03	0.01	0.06	0.01	0.06	0.00	0.01	83.87	367.34
E028	S028	Uncaptured Liquid Loading	---	---	---	---	107.20	27.87	---	---	---	---	---	---	---	---	---	---
---	---	Fugitives	---	---	---	---	---	26.28	---	---	---	---	---	---	---	37.05	---	926.51
---	---	Haul Roads	---	---	---	---	---	---	---	---	---	4.28	---	0.43	---	---	---	---
Facility Total			9.92	43.44	8.24	36.11	114.41	65.10	0.05	0.21	0.66	7.17	0.66	3.33	1.43	43.33	9775.92	43745.11
Facility Total (excluding fugitive emissions)			9.92	43.44	8.24	36.11	114.41	38.81	0.05	0.21	0.66	2.90	0.66	2.90	1.43	6.28	9775.92	42818.60

1. Emissions routed to combustors are divided evenly by the total number of combustors (i.e., Combustor Point Emissions = [storage tanks emissions + captured loading emissions] / [number of combustors] + combustor emissions)

Emission Point ID #	Emission Source ID#s	Emission Source Description	Formaldehyde		Benzene		Toluene		Ethylbenzene		Xylenes		n-Hexane		Total BTEX		Total HAP	
			lb/hr	tpy	lb/hr	tpy	lb/hr	tpy	lb/hr	tpy	lb/hr	tpy	lb/hr	tpy	lb/hr	tpy	lb/hr	tpy
		Produced Water/Condensate																
C001, C003	S001-S006	Storage Tanks	---	---	3.5E-04	1.5E-03	9.7E-04	4.3E-03	5.0E-05	2.2E-04	5.7E-04	2.5E-03	0.04	0.19	1.9E-03	8.51E-03	0.05	0.20
C002, C004	S013-S018	Produced Fluids Storage Tanks	---	---	3.5E-04	1.5E-03	9.7E-04	4.3E-03	5.0E-05	2.2E-04	5.7E-04	2.5E-03	0.04	0.19	1.9E-03	8.51E-03	0.05	0.20
C001-C004	S028	Captured Liquid Loading	---	---	<0.01	<0.01	<0.01	<0.01	4.6E-03	1.2E-03	2.2E-03	5.7E-04	0.25	0.06	6.76E-03	1.8E-03	0.25	0.07
C002, C004	S027	Sand Separator Tank	---	---	---	---	---	---	---	---	---	---	1.0E-03	6.0E-03	---	---	2.0E-03	1.0E-02
C001	C001	Tank Combustor	---	---	---	---	---	---	---	---	---	---	---	---	---	---	---	---
C002	C002	Tank Combustor	---	---	---	---	---	---	---	---	---	---	---	---	---	---	---	---
C003	C003	Tank Combustor	---	---	---	---	---	---	---	---	---	---	---	---	---	---	---	---
C004	C004	Tank Combustor	---	---	---	---	---	---	---	---	---	---	---	---	---	---	---	---
C001	**S001-S006, S028, C001**	**---**	**---**	**---**	**1.7E-04**	**7.7E-04**	**4.9E-04**	**2.1E-03**	**1.2E-03**	**4.1E-04**	**8.3E-04**	**1.4E-03**	**0.08**	**0.11**	**2.7E-03**	**4.7E-03**	**0.09**	**0.12**
C002	**S013-S018, S027, S028, C002**	**---**	**---**	**---**	**1.7E-04**	**7.7E-04**	**4.9E-04**	**2.1E-03**	**1.2E-03**	**4.1E-04**	**8.3E-04**	**1.4E-03**	**0.08**	**0.11**	**2.7E-03**	**4.7E-03**	**0.09**	**0.12**
C003	**S001-S006, S028, C003**	**---**	**---**	**---**	**1.7E-04**	**7.7E-04**	**4.9E-04**	**2.1E-03**	**1.2E-03**	**4.1E-04**	**8.3E-04**	**1.4E-03**	**0.08**	**0.11**	**2.7E-03**	**4.7E-03**	**0.09**	**0.12**
C004	**S013-S018, S027, S028, C004**	**---**	**---**	**---**	**1.7E-04**	**7.7E-04**	**4.9E-04**	**2.1E-03**	**1.2E-03**	**4.1E-04**	**8.3E-04**	**1.4E-03**	**0.08**	**0.11**	**2.7E-03**	**4.7E-03**	**0.09**	**0.12**
E007	S007	Line Heater	1.1E-04	4.8E-04	3.1E-06	1.3E-05	5.0E-06	2.2E-05	---	---	---	---	2.6E-03	0.01	8.1E-06	3.5E-05	2.8E-03	0.01
E008	S008	Line Heater	1.1E-04	4.8E-04	3.1E-06	1.3E-05	5.0E-06	2.2E-05	---	---	---	---	2.6E-03	0.01	8.1E-06	3.5E-05	2.8E-03	0.01
E009	S009	Line Heater	1.1E-04	4.8E-04	3.1E-06	1.3E-05	5.0E-06	2.2E-05	---	---	---	---	2.6E-03	0.01	8.1E-06	3.5E-05	2.8E-03	0.01
E010	S010	Line Heater	1.1E-04	4.8E-04	3.1E-06	1.3E-05	5.0E-06	2.2E-05	---	---	---	---	2.6E-03	0.01	8.1E-06	3.5E-05	2.8E-03	0.01
E011	S011	Line Heater	1.1E-04	4.8E-04	3.1E-06	1.3E-05	5.0E-06	2.2E-05	---	---	---	---	2.6E-03	0.01	8.1E-06	3.5E-05	2.8E-03	0.01
E019	S019	Line Heater	1.1E-04	4.8E-04	3.1E-06	1.3E-05	5.0E-06	2.2E-05	---	---	---	---	2.6E-03	0.01	8.1E-06	3.5E-05	2.8E-03	0.01
E020	S020	Line Heater	1.1E-04	4.8E-04	3.1E-06	1.3E-05	5.0E-06	2.2E-05	---	---	---	---	2.6E-03	0.01	8.1E-06	3.5E-05	2.8E-03	0.01
E021	S021	Line Heater	1.1E-04	4.8E-04	3.1E-06	1.3E-05	5.0E-06	2.2E-05	---	---	---	---	2.6E-03	0.01	8.1E-06	3.5E-05	2.8E-03	0.01
E022	S022	Line Heater	1.1E-04	4.8E-04	3.1E-06	1.3E-05	5.0E-06	2.2E-05	---	---	---	---	2.6E-03	0.01	8.1E-06	3.5E-05	2.8E-03	0.01
E023	S023	Line Heater	1.1E-04	4.8E-04	3.1E-06	1.3E-05	5.0E-06	2.2E-05	---	---	---	---	2.6E-03	0.01	8.1E-06	3.5E-05	2.8E-03	0.01
E029	S029	LPS Heater	7.1E-05	3.1E-04	2.0E-06	8.8E-06	3.2E-06	1.4E-05	---	---	---	---	1.7E-03	0.01	5.2E-06	2.3E-05	1.8E-03	0.01
E032	S032	LPS Heater	7.1E-05	3.1E-04	2.0E-06	8.8E-06	3.2E-06	1.4E-05	---	---	---	---	1.7E-03	0.01	5.2E-06	2.3E-05	1.8E-03	0.01
E012	S012	TEG	9.3E-07	4.1E-06	2.6E-08	1.1E-07	4.2E-08	1.8E-07	---	---	---	---	2.2E-05	9.7E-05	6.8E-08	3.0E-07	2.3E-05	1.0E-04
E024	S024	TEG	9.3E-07	4.1E-06	2.6E-08	1.1E-07	4.2E-08	1.8E-07	---	---	---	---	2.2E-05	9.7E-05	6.8E-08	3.0E-07	2.3E-05	1.0E-04
E025	S025	TEG	9.3E-07	4.1E-06	2.6E-08	1.1E-07	4.2E-08	1.8E-07	---	---	---	---	2.2E-05	9.7E-05	6.8E-08	3.0E-07	2.3E-05	1.0E-04
E026	S026	Sand Separator Tank	---	---	---	---	---	---	---	---	---	---	1.0E-03	6.0E-03	---	---	2.0E-03	1.0E-02
E031	S031	VRU Engine	0.06	0.28	4.9E-03	2.1E-02	3.7E-05	7.5E-03	7.6E-05	3.3E-04	6.0E-04	2.6E-03	---	---	5.58E-03	3.18E-02	0.10	0.44
E033	S033	VRU Engine	0.01	0.06	1.1E-03	5.0E-03	4.0E-04	1.8E-03	1.8E-05	7.8E-05	1.4E-04	6.1E-04	---	---	1.7E-03	7.40E-03	0.02	0.10
E028	S028	Uncaptured Liquid Loading	---	---	<0.01	<0.01	<0.01	<0.01	9.8E-02	2.5E-02	0.05	1.2E-02	5.29	1.37	1.45E-01	3.77E-02	5.44	1.41
---	---	Fugitives	---	---	---	0.01	---	0.04	---	---	---	0.05	---	0.41	---	9.89E-02	---	1.12
---	---	Haul Roads	---	---	---	---	---	---	---	---	---	---	---	---	---	---	---	---
Facility Total			0.08	0.35	0.01	0.04	2.4E-03	0.06	0.10	0.03	0.05	0.07	5.65	2.37	0.16	0.19	5.94	3.69
Facility Total (excluding fugitive emissions)			0.08	0.35	0.01	0.03	2.4E-03	0.02	0.10	0.03	0.05	0.02	5.65	1.96	0.16	0.10	5.94	2.58

1. Emissions routed to combustors are divided evenly by the total number of combustors (i.e., Combustor Point Emissions = [storage tanks emissions + captured loading emissions] / [number of combustors] + combustor emissions)

Company Name: EQT Production, LLC
Facility Name: PEN15 Wellpad
Project Description: R13 Application

Produced Water and Condensate Storage Vessels (S001-S006)

Potential Throughput

Operational Hours	8,760	hrs/yr
Maximum Condensate Throughput[1]	8,237	bbl/month
Maximum Produced Water Throughput[1]	22,411	bbl/month

[1] Based on the highest monthly throughput recorded at the site (July 2015) and includes a safety factor of 200 percent.

Overall Control Efficiency of Combustor 98%

Storage Tanks - Uncontrolled

	Breathing		Working		Flashing		Total Emissions	
	lb/hr	tpy	lb/hr	tpy	lb/hr	tpy	lb/hr	tpy
Methane	<0.001	<0.001	<0.001	<0.001	1.506	6.594	1.506	6.594
Ethane	<0.001	<0.001	<0.001	<0.001	3.452	15.120	3.452	15.120
Propane	0.120	0.526	2.253	9.869	12.891	56.463	15.264	66.858
Isobutane	0.029	0.129	0.413	1.809	3.370	14.762	3.813	16.700
n-Butane	0.065	0.285	0.957	4.193	7.531	32.984	8.553	37.462
Isopentane	0.020	0.088	0.265	1.161	2.444	10.704	2.729	11.953
n-Pentane	0.019	0.085	0.253	1.109	2.473	10.831	2.746	12.026
n-Hexane	0.016	0.068	0.202	0.886	1.970	8.627	2.188	9.581
Cyclohexane	0.001	0.003	0.009	0.040	0.109	0.479	0.119	0.522
Methylcyclopentane	<0.001	<0.001	<0.001	<0.001	<0.001	<0.001	<0.001	<0.001
n-Heptane	0.006	0.028	0.082	0.357	0.831	3.640	0.919	4.025
n-Octane	0.002	0.011	0.032	0.139	0.331	1.449	0.365	1.600
n-Nonane	3.40E-04	0.001	0.004	0.019	0.047	0.206	0.052	0.227
n-Decane	1.76E-04	0.001	0.002	0.010	0.025	0.112	0.028	0.122
n-Undecane	<0.001	<0.001	<0.001	<0.001	<0.001	<0.001	<0.001	<0.001
Dodecane	<0.001	<0.001	<0.001	<0.001	<0.001	<0.001	<0.001	<0.001
Triethylene Glycol	<0.001	<0.001	<0.001	<0.001	<0.001	<0.001	<0.001	<0.001
Cyclopentane	<0.001	<0.001	<0.001	<0.001	<0.001	<0.001	<0.001	<0.001
Isohexane	0.006	0.028	0.082	0.360	0.784	3.433	0.872	3.821
3-Methylpentane	<0.001	<0.001	<0.001	<0.001	<0.001	<0.001	<0.001	<0.001
Neohexane	<0.001	<0.001	<0.001	<0.001	<0.001	<0.001	<0.001	<0.001
2,3-Dimethylbutane	<0.001	<0.001	<0.001	<0.001	<0.001	<0.001	<0.001	<0.001
Methylcyclohexane	<0.001	<0.001	<0.001	<0.001	<0.001	<0.001	<0.001	<0.001
Decane, 2-Methyl-	<0.001	<0.001	<0.001	<0.001	<0.001	<0.001	<0.001	<0.001
Benzene	6.47E-05	2.84E-04	0.004	0.017	0.014	0.060	0.017	0.077
Toluene	1.98E-04	0.001	0.005	0.022	0.043	0.190	0.049	0.213
Ethylbenzene	1.13E-05	4.97E-05	1.86E-04	0.001	0.002	0.010	0.002	0.011
m-Xylene	1.27E-04	0.001	0.002	0.009	0.026	0.116	0.029	0.125
Isooctane	<0.001	<0.001	<0.001	<0.001	<0.001	<0.001	<0.001	<0.001
Total VOC Emissions:	0.29	1.25	4.57	20.00	32.89	144.07	37.74	165.32
Total HAP Emissions:	1.6E-02	0.07	0.21	0.94	2.06	9.00	2.28	10.01

[1] Uncontrolled emissions calculation using Promax (sum of produced water and condensate). Non-methane emissions are taken from the tank emissions stencil. Methane emissions are taken from the flash stream composition.
[2] Composition of condensate from PEN 15 sample from 4/11/13.

Storage Tanks - Controlled

	Breathing		Working		Flashing		Total Emissions	
	lb/hr	tpy			lb/hr	tpy	lb/hr	tpy
Methane	<0.001	<0.001	<0.001	<0.001	0.030	0.132	0.030	0.132
Ethane	<0.001	<0.001	<0.001	<0.001	0.069	0.302	0.069	0.302
Propane	0.002	0.011	0.045	0.197	0.258	1.129	0.305	1.337
Isobutane	0.001	0.003	0.008	0.036	0.067	0.295	0.076	0.334
n-Butane	0.001	0.006	0.019	0.084	0.151	0.660	0.171	0.749
Isopentane	4.00E-04	0.002	0.005	0.023	0.049	0.214	0.055	0.239
n-Pentane	3.89E-04	0.002	0.005	0.022	0.049	0.217	0.055	0.241
n-Hexane	3.12E-04	0.001	0.004	0.018	0.039	0.173	0.044	0.192
Cyclohexane	1.31E-05	5.74E-05	1.80E-04	0.001	0.002	0.010	0.002	0.010
Methylcyclopentane	<0.001	<0.001	<0.001	<0.001	<0.001	<0.001	<0.001	<0.001
n-Heptane	1.26E-04	0.001	0.002	0.007	0.017	0.073	0.018	0.081
n-Octane	4.92E-05	2.16E-04	0.001	0.003	0.007	0.029	0.007	0.032
n-Nonane	6.80E-06	2.98E-05	8.80E-05	3.86E-04	0.001	0.004	0.001	0.005
n-Decane	3.51E-06	1.54E-05	4.55E-05	1.99E-04	0.001	0.002	0.001	0.002
n-Undecane	<0.001	<0.001	<0.001	<0.001	<0.001	<0.001	<0.001	<0.001
Dodecane	<0.001	<0.001	<0.001	<0.001	<0.001	<0.001	<0.001	<0.001
Triethylene Glycol	<0.001	<0.001	<0.001	<0.001	<0.001	<0.001	<0.001	<0.001
Cyclopentane	<0.001	<0.001	<0.001	<0.001	<0.001	<0.001	<0.001	<0.001
Isohexane	1.27E-04	0.001	0.002	0.007	0.016	0.069	0.017	0.076
3-Methylpentane	<0.001	<0.001	<0.001	<0.001	<0.001	<0.001	<0.001	<0.001
Neohexane	<0.001	<0.001	<0.001	<0.001	<0.001	<0.001	<0.001	<0.001
2,3-Dimethylbutane	<0.001	<0.001	<0.001	<0.001	<0.001	<0.001	<0.001	<0.001
Methylcyclohexane	<0.001	<0.001	<0.001	<0.001	<0.001	<0.001	<0.001	<0.001
Decane, 2-Methyl-	<0.001	<0.001	<0.001	<0.001	<0.001	<0.001	<0.001	<0.001
Benzene	1.29E-06	5.67E-06	7.60E-05	3.33E-04	2.72E-04	0.001	3.50E-04	0.002
Toluene	3.96E-06	1.73E-05	1.03E-04	4.50E-04	0.001	0.004	0.001	0.004
Ethylbenzene	2.27E-07	9.93E-07	3.71E-06	1.63E-05	4.59E-05	2.01E-04	4.99E-05	2.18E-04
m-Xylene	2.53E-06	1.11E-05	3.97E-05	1.74E-04	0.001	0.002	0.001	0.002
Isooctane	<0.001	<0.001	<0.001	<0.001	<0.001	<0.001	<0.001	<0.001
Total VOC Emissions:	0.01	0.03	0.09	0.40	0.66	2.88	0.75	3.31
Total HAP Emissions:	3.2E-04	0.00	0.00	0.02	0.04	0.18	0.05	0.20

Company Name: EQT Production, LLC
Facility Name: PEN15 Wellpad
Project Description: R13 Application

Produced Fluids Storage Vessels (S013-S018)

Potential Throughput

Operational Hours	8,760	hrs/yr
Maximum Condensate Throughput[1]	8,237	bbl/month
Maximum Produced Water Throughput[1]	22,411	bbl/month

[1] Based on the highest monthly throughput recorded at the site (July 2015). Includes a safety factor of 200 percent

Overall Control Efficiency of Combustor 98%

Storage Tanks - Uncontrolled

	Breathing		Working		Flashing		Total Emissions	
	lb/hr	tpy	lb/hr	tpy	lb/hr	tpy	lb/hr	tpy
Methane	<0.001	<0.001	<0.001	<0.001	1.506	6.594	1.506	6.594
Ethane	<0.001	<0.001	<0.001	<0.001	3.452	15.120	3.452	15.120
Propane	0.120	0.526	2.253	9.869	12.891	56.463	15.264	66.858
Isobutane	0.029	0.129	0.413	1.809	3.370	14.762	3.813	16.700
n-Butane	0.065	0.285	0.957	4.193	7.531	32.984	8.553	37.462
Isopentane	0.020	0.088	0.265	1.161	2.444	10.704	2.729	11.953
n-Pentane	0.019	0.085	0.253	1.109	2.473	10.831	2.746	12.026
n-Hexane	0.016	0.068	0.202	0.886	1.970	8.627	2.188	9.581
Cyclohexane	0.001	0.003	0.009	0.040	0.109	0.479	0.119	0.522
Methylcyclopentane	<0.001	<0.001	<0.001	<0.001	<0.001	<0.001	<0.001	<0.001
n-Heptane	0.006	0.028	0.082	0.357	0.831	3.640	0.919	4.025
n-Octane	0.002	0.011	0.032	0.139	0.331	1.449	0.365	1.600
n-Nonane	3.40E-04	0.001	0.004	0.019	0.047	0.206	0.052	0.227
n-Decane	1.76E-04	0.001	0.002	0.010	0.025	0.112	0.028	0.122
n-Undecane	<0.001	<0.001	<0.001	<0.001	<0.001	<0.001	<0.001	<0.001
Dodecane	<0.001	<0.001	<0.001	<0.001	<0.001	<0.001	<0.001	<0.001
Triethylene Glycol	<0.001	<0.001	<0.001	<0.001	<0.001	<0.001	<0.001	<0.001
Cyclopentane	<0.001	<0.001	<0.001	<0.001	<0.001	<0.001	<0.001	<0.001
Isohexane	0.006	0.028	0.082	0.360	0.784	3.433	0.872	3.821
3-Methylpentane	<0.001	<0.001	<0.001	<0.001	<0.001	<0.001	<0.001	<0.001
Neohexane	<0.001	<0.001	<0.001	<0.001	<0.001	<0.001	<0.001	<0.001
2,3-Dimethylbutane	<0.001	<0.001	<0.001	<0.001	<0.001	<0.001	<0.001	<0.001
Methylcyclohexane	<0.001	<0.001	<0.001	<0.001	<0.001	<0.001	<0.001	<0.001
Decane, 2-Methyl-	<0.001	<0.001	<0.001	<0.001	<0.001	<0.001	<0.001	<0.001
Benzene	6.47E-05	2.84E-04	0.004	0.017	0.014	0.060	0.017	0.077
Toluene	1.98E-04	0.001	0.005	0.022	0.043	0.190	0.049	0.213
Ethylbenzene	1.13E-05	4.97E-05	1.86E-04	0.001	0.002	0.010	0.002	0.011
m-Xylene	1.27E-04	0.001	0.002	0.009	0.026	0.116	0.029	0.125
Isooctane	<0.001	<0.001	<0.001	<0.001	<0.001	<0.001	<0.001	<0.001
Total VOC Emissions:	0.29	1.25	4.57	20.00	32.89	144.07	37.74	165.32
Total HAP Emissions:	1.6E-02	0.07	0.21	0.94	2.06	9.00	2.28	10.01

[1] Uncontrolled emissions calculation using Promax (sum of produced water and condensate). Non-methane emissions are taken from the tank emissions stencil. Methane emissions are taken from the flash stream composition.
[2] Composition of condensate from PEN 15 sample from 4/11/13.

Storage Tanks - Controlled

	Breathing		Working		Flashing		Total Emissions	
	lb/hr	tpy			lb/hr	tpy	lb/hr	tpy
Methane	<0.001	<0.001	<0.001	<0.001	0.030	0.132	0.030	0.132
Ethane	<0.001	<0.001	<0.001	<0.001	0.069	0.302	0.069	0.302
Propane	0.002	0.011	0.045	0.197	0.258	1.129	0.305	1.337
Isobutane	0.001	0.003	0.008	0.036	0.067	0.295	0.076	0.334
n-Butane	0.001	0.006	0.019	0.084	0.151	0.660	0.171	0.749
Isopentane	4.00E-04	0.002	0.005	0.023	0.049	0.214	0.055	0.239
n-Pentane	3.89E-04	0.002	0.005	0.022	0.049	0.217	0.055	0.241
n-Hexane	3.12E-04	0.001	0.004	0.018	0.039	0.173	0.044	0.192
Cyclohexane	1.31E-05	5.74E-05	1.80E-04	0.001	0.002	0.010	0.002	0.010
Methylcyclopentane	<0.001	<0.001	<0.001	<0.001	<0.001	<0.001	<0.001	<0.001
n-Heptane	1.26E-04	0.001	0.002	0.007	0.017	0.073	0.018	0.081
n-Octane	4.92E-05	2.16E-04	0.001	0.003	0.007	0.029	0.007	0.032
n-Nonane	6.80E-06	2.98E-05	8.80E-05	3.86E-04	0.001	0.004	0.001	0.005
n-Decane	3.51E-06	1.54E-05	4.55E-05	1.99E-04	0.001	0.002	0.001	0.002
n-Undecane	<0.001	<0.001	<0.001	<0.001	<0.001	<0.001	<0.001	<0.001
Dodecane	<0.001	<0.001	<0.001	<0.001	<0.001	<0.001	<0.001	<0.001
Triethylene Glycol	<0.001	<0.001	<0.001	<0.001	<0.001	<0.001	<0.001	<0.001
Cyclopentane	<0.001	<0.001	<0.001	<0.001	<0.001	<0.001	<0.001	<0.001
Isohexane	1.27E-04	0.001	0.002	0.007	0.016	0.069	0.017	0.076
3-Methylpentane	<0.001	<0.001	<0.001	<0.001	<0.001	<0.001	<0.001	<0.001
Neohexane	<0.001	<0.001	<0.001	<0.001	<0.001	<0.001	<0.001	<0.001
2,3-Dimethylbutane	<0.001	<0.001	<0.001	<0.001	<0.001	<0.001	<0.001	<0.001
Methylcyclohexane	<0.001	<0.001	<0.001	<0.001	<0.001	<0.001	<0.001	<0.001
Decane, 2-Methyl-	<0.001	<0.001	<0.001	<0.001	<0.001	<0.001	<0.001	<0.001
Benzene	1.29E-06	5.67E-06	7.60E-05	3.33E-04	2.72E-04	0.001	3.50E-04	0.002
Toluene	3.96E-06	1.73E-05	1.03E-04	4.50E-04	0.001	0.004	0.001	0.004
Ethylbenzene	2.27E-07	9.93E-07	3.71E-06	1.63E-05	4.59E-05	2.01E-04	4.99E-05	2.18E-04
m-Xylene	2.53E-06	1.11E-05	3.97E-05	1.74E-04	0.001	0.002	0.001	0.002
Isooctane	<0.001	<0.001	<0.001	<0.001	<0.001	<0.001	<0.001	<0.001
Total VOC Emissions:	0.01	0.03	0.09	0.40	0.66	2.88	0.75	3.31
Total HAP Emissions:	3.2E-04	0.00	0.00	0.02	0.04	0.18	0.05	0.20

Company Name: EQT Production, LLC
Facility Name: PEN15 Wellpad
Project Description: R13 Application

Sand Separator Tank

Throughput Parameter	Value	Units
Tank Capacity	5,880	gallons
Operational Hours	8,760	hrs/yr
Throughput	280	bbl/month
Percent Produced Water	50%	
Total Produced Water Throughput	140	bbl/month

[1] Conservatively assumes 2 turnovers/month of sand and produced water.

Description	Potential Throughput (gal/yr)
Produced Water and Sand	141,120

Sand Separator Tank (140 bbl) - Uncontrolled *(Per tank)*

Constituent	Total Emissions [1] lb/hr	tpy
Methane	0.006	0.028
Ethane	0.003	0.015
Propane	0.012	0.054
Isobutane	0.005	0.020
n-Butane	0.013	0.055
Isopentane	0.004	0.019
n-Pentane	0.005	0.020
Hexanes	0.002	0.008
Heptanes	0.002	0.007
Octane	<0.001	<0.001
Nonane	<0.001	<0.001
Decane	<0.001	<0.001
Benzene	<0.001	<0.001
Toluene	<0.001	<0.001
Ethylbenzene	<0.001	<0.001
Xylenes	<0.001	<0.001
n-Hexane	0.001	0.006
2,2,4-Trimethylpentane	0.001	0.004
Total HC Emissions:	0.055	0.240
Total VOC Emissions:	0.045	0.196
Total HAP Emissions:	0.002	0.010

[1] E&P TANK 2.0 calculates working, breathing and flashing losses and reports the sum as one total.

Sand Separator Tank (140 bbl) - Controlled *(Per tank)*

Constituent	Total Emissions lb/hr	tpy
Methane	0.006	0.028
Ethane	0.003	0.015
Propane	0.012	0.054
Isobutane	0.005	0.020
n-Butane	0.013	0.055
Isopentane	0.004	0.019
n-Pentane	0.005	0.020
Hexanes	0.002	0.008
Heptanes	0.002	0.007
Octane	<0.001	<0.001
Nonane	<0.001	<0.001
Decane	<0.001	<0.001
Benzene	<0.001	<0.001
Toluene	<0.001	<0.001
Ethylbenzene	<0.001	<0.001
Xylenes	<0.001	<0.001
n-Hexane	0.001	0.006
2,2,4-Trimethylpentane	0.001	0.004
Total Emissions:	0.054	0.236
Total VOC Emissions:	0.045	0.196
Total HAP Emissions:	0.002	0.010

[1] Even though the sand seaprator tanks are controlled, no control effieincy is assumed.

Company Name: EQT Production, LLC
Facility Name: PEN15 Wellpad
Project Description: R13 Application

VRU Engine

Engine Information:

Manufacturer:	Waukesha
Model No.:	F18GL
Engine ID	S031
Stroke Cycle:	4-stroke
Type of Burn:	Rich
Rated Horsepower (bhp):	440

Engine Fuel Information:

Fuel Type:	Natural Gas
Higher Heating Value (HHV) (Btu/scf):	1,050
Specific Fuel Consumption (Btu/bhp-hr):	7,000
Maximum Fuel Consumption at 100% Load (scf/hr):	2,933
Heat Input (MMBtu/hr):	3.08
Potential Fuel Consumption (MMBtu/yr):	26,981
Max. Fuel Consumption at 100%(MMscf/hr):	0.0029
Max. Fuel Consumption (MMscf/yr):	25.7
Max. Annual Hours of Operation (hr/yr):	8,760

Engine Emissions Data:

Pollutant	Emission Factor	Units	Maximum Potential Emissions		Estimation Basis / Emission Factor Source
			lbs/hr	tpy	
NO_X	2.00	g/bhp-hr	1.94	8.50	Manufacturer's Specs
NMHC (excludes HCHO)	0.27	g/bhp-hr	0.26	1.15	Manufacturer's Specs
NMHC + HCHO	---	---	0.33	1.42	NMHC + HCHO
CO	1.30	g/bhp-hr	1.26	5.52	Manufacturer's Specs
SO_X	0.001	lb/MMBtu	0.00	0.01	AP-42, Table 3.2-3 (Aug-2000)
PM_{10}	0.02	lb/MMBtu	0.06	0.26	AP-42, Table 3.2-3 (Aug-2000)
$PM_{2.5}$	0.02	lb/MMBtu	0.06	0.26	AP-42, Table 3.2-3 (Aug-2000)
Formaldehyde (HCHO)	0.02	lb/MMBtu	0.06	0.28	AP-42, Table 3.2-3 (Aug-2000)
GHG (CO_2e)	See Table Below		395	1,731	40 CFR 98, Tables C-1 & C-2
Other (Total HAP)	See Table Below		0.10	0.44	AP-42, Table 3.2-3 (Aug-2000)

Notes:

1. PM_{10} and $PM_{2.5}$ are total values (filterable + condensable).
2. GHG (CO_2e) is carbon dioxide equivalent, which is the summation of CO_2 (GWP = 1) + CH_4 (GWP = 25) + N_2O (GWP = 298).
3. Total HAP is the summation of all hazardous air pollutants for which there is a published emission factor for this source type.

Greenhouse Gas (GHG) & Hazardous Air Pollutant (HAP) Emissions Calculations:

Pollutant	Emission Factor	Units	Maximum Potential Emissions		Estimation Basis / Emission Factor Source
			lbs/hr	tpy	
GHGs:					
CO_2	53.06	kg/MMBtu	360.35	1578.34	40 CFR 98, Table C-1
CH_4	1.43	g/bhp-hr	1.39	6.08	Manufacturer's Specs (THC-NMHC)
N_2O	0.0001	kg/MMBtu	6.8E-04	3.0E-03	40 CFR 98, Table C-2
GHG (CO_2e)			**395**	**1,731**	
Organic HAPs:					
1,1,2,2-Tetrachloroethane	2.53E-05	lb/MMBtu	7.8E-05	3.4E-04	AP-42, Table 3.2-3 (Aug-2000)
1,1,2-Trichloroethane	1.53E-05	lb/MMBtu	4.7E-05	2.1E-04	AP-42, Table 3.2-3 (Aug-2000)
1,3-Butadiene	6.63E-04	lb/MMBtu	2.0E-03	8.9E-03	AP-42, Table 3.2-3 (Aug-2000)
1,3-Dichloropropene	1.27E-05	lb/MMBtu	3.9E-05	1.7E-04	AP-42, Table 3.2-3 (Aug-2000)
Acetaldehyde	2.79E-03	lb/MMBtu	8.6E-03	3.8E-02	AP-42, Table 3.2-3 (Aug-2000)
Acrolein	2.63E-03	lb/MMBtu	8.1E-03	3.5E-02	AP-42, Table 3.2-3 (Aug-2000)
Benzene	1.58E-03	lb/MMBtu	4.9E-03	2.1E-02	AP-42, Table 3.2-3 (Aug-2000)
Carbon Tetrachloride	1.77E-05	lb/MMBtu	5.5E-05	2.4E-04	AP-42, Table 3.2-3 (Aug-2000)
Chlorobenzene	1.29E-05	lb/MMBtu	4.0E-05	1.7E-04	AP-42, Table 3.2-3 (Aug-2000)
Chloroform	1.37E-05	lb/MMBtu	4.2E-05	1.8E-04	AP-42, Table 3.2-3 (Aug-2000)
Ethylbenzene	2.48E-05	lb/MMBtu	7.6E-05	3.3E-04	AP-42, Table 3.2-3 (Aug-2000)
Ethylene Dibromide	2.13E-05	lb/MMBtu	6.6E-05	2.9E-04	AP-42, Table 3.2-3 (Aug-2000)
Methanol	3.06E-03	lb/MMBtu	9.4E-03	4.1E-02	AP-42, Table 3.2-3 (Aug-2000)
Methylene Chloride	4.12E-05	lb/MMBtu	1.3E-04	5.6E-04	AP-42, Table 3.2-3 (Aug-2000)
Naphthalene	9.71E-05	lb/MMBtu	3.0E-04	1.3E-03	AP-42, Table 3.2-3 (Aug-2000)
PAH	1.41E-04	lb/MMBtu	4.3E-04	1.9E-03	AP-42, Table 3.2-3 (Aug-2000)
Styrene	1.19E-05	lb/MMBtu	3.7E-05	1.6E-04	AP-42, Table 3.2-3 (Aug-2000)
Toluene	5.58E-04	lb/MMBtu	1.7E-03	7.5E-03	AP-42, Table 3.2-3 (Aug-2000)
Vinyl Chloride	7.18E-06	lb/MMBtu	2.2E-05	9.7E-05	AP-42, Table 3.2-3 (Aug-2000)
Xylene	1.95E-04	lb/MMBtu	6.0E-04	2.6E-03	AP-42, Table 3.2-3 (Aug-2000)
Total HAP			**0.10**	**0.44**	

Company Name: EQT Production, LLC
Facility Name: PEN15 Wellpad
Project Description: R13 Application

VRU Engine

Engine Information:

Manufacturer:	Ford
Model No.:	CSG-637
Engine ID	S033
Stroke Cycle:	4-stroke
Type of Burn:	Rich
Rated Horsepower (bhp):	110

Engine Fuel Information:

Fuel Type:	Natural Gas
Higher Heating Value (HHV) (Btu/scf):	1,050
Specific Fuel Consumption (Btu/bhp-hr):	6,510
Maximum Fuel Consumption at 100% Load (scf/hr):	682
Heat Input (MMBtu/hr):	0.72
Potential Fuel Consumption (MMBtu/yr):	6,273
Max. Fuel Consumption at 100%(MMscf/hr):	0.0007
Max. Fuel Consumption (MMscf/yr):	6.0
Max. Annual Hours of Operation (hr/yr):	8,760

Engine Emissions Data:

Pollutant	Emission Factor	Units	Maximum Potential Emissions		Estimation Basis / Emission Factor Source
			lbs/hr	tpy	
NO_X	1.00	g/bhp-hr	0.24	1.06	Manufacturer's Specs
NMHC (excludes HCHO)	0.70	g/bhp-hr	0.17	0.74	Manufacturer's Specs
NMHC + HCHO	---	---	0.18	0.81	NMHC + HCHO
CO	2.00	g/bhp-hr	0.49	2.12	Manufacturer's Specs
SO_X	0.001	lb/MMBtu	0.00	0.00	AP-42, Table 3.2-3 (Aug-2000)
PM_{10}	0.02	lb/MMBtu	0.01	0.06	AP-42, Table 3.2-3 (Aug-2000)
$PM_{2.5}$	0.02	lb/MMBtu	0.01	0.06	AP-42, Table 3.2-3 (Aug-2000)
Formaldehyde (HCHO)	0.02	lb/MMBtu	0.01	0.06	AP-42, Table 3.2-3 (Aug-2000)
GHG (CO_2e)	See Table Below		84	367	40 CFR 98, Tables C-1 & C-2
Other (Total HAP)	See Table Below		0.02	0.10	AP-42, Table 3.2-3 (Aug-2000)

Notes:

1. PM_{10} and $PM_{2.5}$ are total values (filterable + condensable).
2. GHG (CO_2e) is carbon dioxide equivalent, which is the summation of CO_2 (GWP = 1) + CH_4 (GWP = 25) + N_2O (GWP = 298).
3. Total HAP is the summation of all hazardous air pollutants for which there is a published emission factor for this source type.

Greenhouse Gas (GHG) & Hazardous Air Pollutant (HAP) Emissions Calculations:

Pollutant	Emission Factor	Units	Maximum Potential Emissions		Estimation Basis / Emission Factor Source
			lbs/hr	tpy	
GHGs:					
CO_2	53.06	kg/MMBtu	83.78	366.96	40 CFR 98, Table C-1
CH_4	0.001	kg/MMBtu	0.00	0.01	40 CFR 98, Table C-2
N_2O	0.0001	kg/MMBtu	1.6E-04	6.9E-04	40 CFR 98, Table C-2
GHG (CO_2e)			**84**	**367**	
Organic HAPs:					
1,1,2,2-Tetrachloroethane	2.53E-05	lb/MMBtu	1.8E-05	7.9E-05	AP-42, Table 3.2-3 (Aug-2000)
1,1,2-Trichloroethane	1.53E-05	lb/MMBtu	1.1E-05	4.8E-05	AP-42, Table 3.2-3 (Aug-2000)
1,3-Butadiene	6.63E-04	lb/MMBtu	4.7E-04	2.1E-03	AP-42, Table 3.2-3 (Aug-2000)
1,3-Dichloropropene	1.27E-05	lb/MMBtu	9.1E-06	4.0E-05	AP-42, Table 3.2-3 (Aug-2000)
Acetaldehyde	2.79E-03	lb/MMBtu	2.0E-03	8.8E-03	AP-42, Table 3.2-3 (Aug-2000)
Acrolein	2.63E-03	lb/MMBtu	1.9E-03	8.2E-03	AP-42, Table 3.2-3 (Aug-2000)
Benzene	1.58E-03	lb/MMBtu	1.1E-03	5.0E-03	AP-42, Table 3.2-3 (Aug-2000)
Carbon Tetrachloride	1.77E-05	lb/MMBtu	1.3E-05	5.6E-05	AP-42, Table 3.2-3 (Aug-2000)
Chlorobenzene	1.29E-05	lb/MMBtu	9.2E-06	4.0E-05	AP-42, Table 3.2-3 (Aug-2000)
Chloroform	1.37E-05	lb/MMBtu	9.8E-06	4.3E-05	AP-42, Table 3.2-3 (Aug-2000)
Ethylbenzene	2.48E-05	lb/MMBtu	1.8E-05	7.8E-05	AP-42, Table 3.2-3 (Aug-2000)
Ethylene Dibromide	2.13E-05	lb/MMBtu	1.5E-05	6.7E-05	AP-42, Table 3.2-3 (Aug-2000)
Methanol	3.06E-03	lb/MMBtu	2.2E-03	9.6E-03	AP-42, Table 3.2-3 (Aug-2000)
Methylene Chloride	4.12E-05	lb/MMBtu	3.0E-05	1.3E-04	AP-42, Table 3.2-3 (Aug-2000)
Naphthalene	9.71E-05	lb/MMBtu	7.0E-05	3.0E-04	AP-42, Table 3.2-3 (Aug-2000)
PAH	1.41E-04	lb/MMBtu	1.0E-04	4.4E-04	AP-42, Table 3.2-3 (Aug-2000)
Styrene	1.19E-05	lb/MMBtu	8.5E-06	3.7E-05	AP-42, Table 3.2-3 (Aug-2000)
Toluene	5.58E-04	lb/MMBtu	4.0E-04	1.8E-03	AP-42, Table 3.2-3 (Aug-2000)
Vinyl Chloride	7.18E-06	lb/MMBtu	5.1E-06	2.3E-05	AP-42, Table 3.2-3 (Aug-2000)
Xylene	1.95E-04	lb/MMBtu	1.4E-04	6.1E-04	AP-42, Table 3.2-3 (Aug-2000)
Total HAP			**0.02**	**0.10**	

Company Name: EQT Production, LLC
Facility Name: PEN15 Wellpad
Project Description: R13 Application

Tank Combustor

Source Designation:	C001 & C002
Pilot Fuel Used:	Natural Gas
Higher Heating Value (HHV) (Btu/scf):	1,050
Pilot Rating (MMBtu/hr)	0.05
Combustor Rating (MMBtu/hr) [1]	11.66
Pilot Fuel Consumption (scf/hr):	50.00
Potential Annual Hours of Operation (hr/yr):	8,760

[1] Maximum heat input for 48" model from Leed Enclosed Combustor Operations Manual

Enclosed Combustor Emissions

Pollutant	Emission Factors [1] (lb/MMBtu)	Combustor (lb/hr)	Combustor (tpy)	Pilot (lb/hr)	Pilot (tpy)	Total (lb/hr)	Total (tpy)
NO_x	0.10	1.14	5.01	5.1E-03	0.02	1.15	5.03
CO	0.08	0.96	4.21	4.3E-03	0.02	0.96	4.22
VOC	5.4E-03	---	---	2.8E-04	1.2E-03	0.00	0.00
SO_2	5.9E-04	0.01	0.03	3.1E-05	1.4E-04	0.01	0.03
PM/PM_{10}	0.01	0.09	0.38	3.9E-04	1.7E-03	0.09	0.38
CO_2	117.00	1364.189	5975.146	6.14	26.90	1370.33	6002.05
CH_4	2.2E-03	---	---	1.2E-04	5.1E-04	0.00	0.00
N_2O	2.2E-04	2.6E-03	0.01	1.2E-05	5.1E-05	2.6E-03	0.01

[1] Emission factors from AP-42 Ch. 1.4 for natural gas combustion were used as they were determined to be most representative of the process. Ch. 5.3 (Natural Gas Processing) was consulted, however, factors contained there are appropriate for amine gas sweetening processes, which is not the case at the PEN-15 Pad. Also, Ch. 13.5 (Industrial Flares) was consulted, but since the control device in this case is an enclosed combustor vs. an elevated flare, these factors were also determined to be inappropriate. Non-pilot VOC and methane emissions calculated using Promax.

Company Name: EQT Production, LLC
Facility Name: PEN15 Wellpad
Project Description: R13 Application

Tank Combustor

Source Designation:	**C003 & C004**
Pilot Fuel Used:	Natural Gas
Higher Heating Value (HHV) (Btu/scf):	1,050
Pilot Rating (MMBtu/hr)	0.05
Combustor Rating (MMBtu/hr)[1]	19.22
Pilot Fuel Consumption (scf/hr):	50.00
Potential Annual Hours of Operation (hr/yr):	8,760

[1] Maximum heat input for 60" model from Leed Enclosed Combustor specifications.

Enclosed Combustor Emissions

	Emission Factors[1]	Combustor		Pilot		Total	
Pollutant	**(lb/MMBtu)**	**(lb/hr)**	**(tpy)**	**(lb/hr)**	**(tpy)**	**(lb/hr)**	**(tpy)**
NO_x	0.10	1.88	8.25	5.1E-03	0.02	1.89	8.28
CO	0.08	1.58	6.93	4.3E-03	0.02	1.59	6.95
VOC	5.4E-03	---	---	2.8E-04	1.2E-03	0.00	0.00
SO_2	5.9E-04	0.01	0.05	3.1E-05	1.4E-04	0.01	0.05
PM/PM_{10}	0.01	0.14	0.63	3.9E-04	1.7E-03	0.14	0.63
CO_2[2]	116.997	2248.688	9849.254	6.14	26.90	2254.83	9876.16
CH_4[2]	2.2E-03	---	---	1.2E-04	5.1E-04	0.00	0.00
N_2O[2]	2.2E-04	4.2E-03	0.02	1.2E-05	5.1E-05	4.2E-03	0.02

[1] Emission factors from AP-42 Ch. 1.4 for natural gas combustion were used as they were determined to be most representative of the process. Ch. 5.3 (Natural Gas Processing) was consulted, however, factors contained there are appropriate for amine gas sweetening processes, which is not the case at the PEN-15 Pad. Also, Ch. 13.5 (Industrial Flares) was consulted, but since the control device in this case is an enclosed combustor vs. an elevated flare, these factors were also determined to be inappropriate. Non-pilot VOC and methane emissions calculated using Promax.

Company Name: EQT Production, LLC
Facility Name: PEN15 Wellpad
Project Description: R13 Application

Line Heater - 1.54 MMBtu/hr

Source Designation:	**S007-S011, S019-S023**
Fuel Used:	Natural Gas
Higher Heating Value (HHV) (Btu/scf):	1,050
Heat Input (MMBtu/hr)	1.54
Fuel Consumption (MMscf/hr):	1.47E-03
Potential Annual Hours of Operation (hr/yr):	8,760

Criteria and Manufacturer Specific Pollutant Emission Rates:

Pollutant	**Emission Factor (lb/MMscf)[1, 4]**	**Potential Emissions**	
		(lb/hr)[2]	**(tons/yr)[3]**
NO_x	100	0.15	0.64
CO	84	0.12	0.54
VOC	5.5	0.01	0.04
SO_2	0.6	8.8E-04	3.9E-03
PM Total	7.6	0.01	0.05
PM Condensable	5.7	0.01	0.04
PM_{10} (Filterable)	1.9	2.8E-03	0.01
$PM_{2.5}$ (Filterable)	1.9	2.8E-03	0.01
Lead	5.00E-04	7.3E-07	3.2E-06
CO_2	117.0	180.00	788.38
CH_4	2.21E-03	3.4E-03	1.5E-02
N_2O	2.21E-04	3.4E-04	1.5E-03

Hazardous Air Pollutant (HAP) Potential Emissions:

Pollutant	Emission Factor (lb/MMscf)[1]	Potential Emissions	
		(lb/hr)[2]	(tons/yr)[3]
HAPs:			
2-Methylnaphthalene	2.4E-05	3.5E-08	1.5E-07
3-Methylchloranthrene	1.8E-06	2.6E-09	1.2E-08
7,12-Dimethylbenz(a)anthracene	1.6E-05	2.3E-08	1.0E-07
Acenaphthene	1.8E-06	2.6E-09	1.2E-08
Acenaphthylene	1.8E-06	2.6E-09	1.2E-08
Anthracene	2.4E-06	3.5E-09	1.5E-08
Benz(a)anthracene	1.8E-06	2.6E-09	1.2E-08
Benzene	2.1E-03	3.1E-06	1.3E-05
Benzo(a)pyrene	1.2E-06	1.8E-09	7.7E-09
Benzo(b)fluoranthene	1.8E-06	2.6E-09	1.2E-08
Benzo(g,h,i)perylene	1.2E-06	1.8E-09	7.7E-09
Benzo(k)fluoranthene	1.8E-06	2.6E-09	1.2E-08
Chrysene	1.8E-06	2.6E-09	1.2E-08
Dibenzo(a,h) anthracene	1.2E-06	1.8E-09	7.7E-09
Dichlorobenzene	1.2E-03	1.8E-06	7.7E-06
Fluoranthene	3.0E-06	4.4E-09	1.9E-08
Fluorene	2.8E-06	4.1E-09	1.8E-08
Formaldehyde	7.5E-02	1.1E-04	4.8E-04
Hexane	1.8E+00	2.6E-03	1.2E-02
Indo(1,2,3-cd)pyrene	1.8E-06	2.6E-09	1.2E-08
Naphthalene	6.1E-04	8.9E-07	3.9E-06
Phenanthrene	1.7E-05	2.5E-08	1.1E-07
Pyrene	5.0E-06	7.3E-09	3.2E-08
Toluene	3.4E-03	5.0E-06	2.2E-05
Arsenic	2.0E-04	2.9E-07	1.3E-06
Beryllium	1.2E-05	1.8E-08	7.7E-08
Cadmium	1.1E-03	1.6E-06	7.1E-06
Chromium	1.4E-03	2.1E-06	9.0E-06
Cobalt	8.4E-05	1.2E-07	5.4E-07
Manganese	3.8E-04	5.6E-07	2.4E-06
Mercury	2.6E-04	3.8E-07	1.7E-06
Nickel	2.1E-03	3.1E-06	1.3E-05
Selenium	2.4E-05	3.5E-08	1.5E-07
Total HAP		**2.8E-03**	**1.2E-02**

[1] Emission factors from AP-42 Section 1.4 "Natural Gas Combustion" Tables 1.4-1, 1.4-2, & 1.4-3

[2] Emission Rate (lb/hr) = Rated Capacity (MMscf/hr) × Emission Factor (lb/MMscf).

[3] Annual Emissions $(tons/yr)_{Potential}$ = $(lb/hr)_{Emissions}$ × (Maximum Allowable Operating Hours, 8760 hr/yr) × (1 ton/2000 lb).

[4] GHG Emission factors from Tables C-1 and C-2, 40 CFR 98, Subpart C.

Company Name: EQT Production, LLC
Facility Name: PEN15 Wellpad
Project Description: R13 Application

LPS Heater

Source Designation:	**S029, S032**
Fuel Used:	Natural Gas
Higher Heating Value (HHV) (Btu/scf):	1,050
Heat Input (MMBtu/hr)	1.00
Fuel Consumption (MMscf/hr):	9.52E-04
Potential Annual Hours of Operation (hr/yr):	8,760

Criteria and Manufacturer Specific Pollutant Emission Rates:

Pollutant	Emission Factor (lb/MMscf)[1, 4]	Potential Emissions	
		(lb/hr)[2]	(tons/yr)[3]
NO_x	100	0.10	0.42
CO	84	0.08	0.35
VOC	5.5	0.01	0.02
SO_2	0.6	5.7E-04	2.5E-03
PM Total	7.6	0.01	0.03
PM Condensable	5.7	0.01	0.02
PM_{10} (Filterable)	1.9	1.8E-03	0.01
$PM_{2.5}$ (Filterable)	1.9	1.8E-03	0.01
Lead	5.00E-04	4.8E-07	2.1E-06
CO_2	117.0	117.00	512.45
CH_4	2.21E-03	2.2E-03	9.7E-03
N_2O	2.21E-04	2.2E-04	9.7E-04

Hazardous Air Pollutant (HAP) Potential Emissions:

Pollutant	Emission Factor (lb/MMscf)[1]	Potential Emissions	
		(lb/hr)[2]	(tons/yr)[3]
HAPs:			
2-Methylnaphthalene	2.4E-05	2.3E-08	1.0E-07
3-Methylchloranthrene	1.8E-06	1.7E-09	7.5E-09
7,12-Dimethylbenz(a)anthracene	1.6E-05	1.5E-08	6.7E-08
Acenaphthene	1.8E-06	1.7E-09	7.5E-09
Acenaphthylene	1.8E-06	1.7E-09	7.5E-09
Anthracene	2.4E-06	2.3E-09	1.0E-08
Benz(a)anthracene	1.8E-06	1.7E-09	7.5E-09
Benzene	2.1E-03	2.0E-06	8.8E-06
Benzo(a)pyrene	1.2E-06	1.1E-09	5.0E-09
Benzo(b)fluoranthene	1.8E-06	1.7E-09	7.5E-09
Benzo(g,h,i)perylene	1.2E-06	1.1E-09	5.0E-09
Benzo(k)fluoranthene	1.8E-06	1.7E-09	7.5E-09
Chrysene	1.8E-06	1.7E-09	7.5E-09
Dibenzo(a,h) anthracene	1.2E-06	1.1E-09	5.0E-09
Dichlorobenzene	1.2E-03	1.1E-06	5.0E-06
Fluoranthene	3.0E-06	2.9E-09	1.3E-08
Fluorene	2.8E-06	2.7E-09	1.2E-08
Formaldehyde	7.5E-02	7.1E-05	3.1E-04
Hexane	1.8E+00	1.7E-03	7.5E-03
Indo(1,2,3-cd)pyrene	1.8E-06	1.7E-09	7.5E-09
Naphthalene	6.1E-04	5.8E-07	2.5E-06
Phenanthrene	1.7E-05	1.6E-08	7.1E-08
Pyrene	5.0E-06	4.8E-09	2.1E-08
Toluene	3.4E-03	3.2E-06	1.4E-05
Arsenic	2.0E-04	1.9E-07	8.3E-07
Beryllium	1.2E-05	1.1E-08	5.0E-08
Cadmium	1.1E-03	1.0E-06	4.6E-06
Chromium	1.4E-03	1.3E-06	5.8E-06
Cobalt	8.4E-05	8.0E-08	3.5E-07
Manganese	3.8E-04	3.6E-07	1.6E-06
Mercury	2.6E-04	2.5E-07	1.1E-06
Nickel	2.1E-03	2.0E-06	8.8E-06
Selenium	2.4E-05	2.3E-08	1.0E-07
Total HAP		**1.8E-03**	**7.9E-03**

[1] Emission factors from AP-42 Section 1.4 "Natural Gas Combustion" Tables 1.4-1, 1.4-2, & 1.4-3

[2] Emission Rate (lb/hr) = Rated Capacity (MMscf/hr) × Emission Factor (lb/MMscf).

[3] Annual Emissions $(tons/yr)_{Potential}$ = $(lb/hr)_{Emissions}$ × (Maximum Allowable Operating Hours, 8760 hr/yr) × (1 ton/2000 lb).

[4] GHG Emission factors from Tables C-1 and C-2, 40 CFR 98, Subpart C.

Company Name: EQT Production, LLC
Facility Name: PEN15 Wellpad
Project Description: R13 Application

Thermoelectric Generator

Source Designation:	**S024-S025, S012**
Fuel Used:	Natural Gas
Higher Heating Value (HHV) (Btu/scf):	1,050
Heat Input (MMBtu/hr) [1]	0.013
Fuel Consumption (MMscf/hr):	1.23E-05
Potential Annual Hours of Operation (hr/yr):	8,760

[1] Global Themorelectric specification sheet states 311 ft^3/day at 1000 BTU/ft^3.

Criteria and Manufacturer Specific Pollutant Emission Rates:

Pollutant	**Emission Factor (lb/MMscf)[2, 5]**	**Potential Emissions**	
		(lb/hr)[3]	**(tons/yr)[4]**
NO_x	100	1.2E-03	0.01
CO	84	1.0E-03	4.5E-03
VOC	5.5	6.8E-05	3.0E-04
SO_2	0.6	7.4E-06	3.2E-05
PM Total	7.6	9.4E-05	4.1E-04
PM Condensable	5.7	7.0E-05	3.1E-04
PM_{10} (Filterable)	1.9	2.3E-05	1.0E-04
$PM_{2.5}$ (Filterable)	1.9	2.3E-05	1.0E-04
Lead	5.00E-04	6.2E-09	2.7E-08
CO_2	116.9	1.51	6.64
CH_4	2.21E-03	2.9E-05	1.3E-04
N_2O	2.21E-04	2.9E-06	1.3E-05

Hazardous Air Pollutant (HAP) Potential Emissions:

Pollutant	Emission Factor (lb/MMscf)[2]	Potential Emissions	
		(lb/hr)[3]	(tons/yr)[4]
HAPs:			
2-Methylnaphthalene	2.4E-05	3.0E-10	1.3E-09
3-Methylchloranthrene	1.8E-06	2.2E-11	9.7E-11
7,12-Dimethylbenz(a)anthracene	1.6E-05	2.0E-10	8.6E-10
Acenaphthene	1.8E-06	2.2E-11	9.7E-11
Acenaphthylene	1.8E-06	2.2E-11	9.7E-11
Anthracene	2.4E-06	3.0E-11	1.3E-10
Benz(a)anthracene	1.8E-06	2.2E-11	9.7E-11
Benzene	2.1E-03	2.6E-08	1.1E-07
Benzo(a)pyrene	1.2E-06	1.5E-11	6.5E-11
Benzo(b)fluoranthene	1.8E-06	2.2E-11	9.7E-11
Benzo(g,h,i)perylene	1.2E-06	1.5E-11	6.5E-11
Benzo(k)fluoranthene	1.8E-06	2.2E-11	9.7E-11
Chrysene	1.8E-06	2.2E-11	9.7E-11
Dibenzo(a,h) anthracene	1.2E-06	1.5E-11	6.5E-11
Dichlorobenzene	1.2E-03	1.5E-08	6.5E-08
Fluoranthene	3.0E-06	3.7E-11	1.6E-10
Fluorene	2.8E-06	3.5E-11	1.5E-10
Formaldehyde	7.5E-02	9.3E-07	4.1E-06
Hexane	1.8E+00	2.2E-05	9.7E-05
Indo(1,2,3-cd)pyrene	1.8E-06	2.2E-11	9.7E-11
Naphthalene	6.1E-04	7.5E-09	3.3E-08
Phenanthrene	1.7E-05	2.1E-10	9.2E-10
Pyrene	5.0E-06	6.2E-11	2.7E-10
Toluene	3.4E-03	4.2E-08	1.8E-07
Arsenic	2.0E-04	2.5E-09	1.1E-08
Beryllium	1.2E-05	1.5E-10	6.5E-10
Cadmium	1.1E-03	1.4E-08	5.9E-08
Chromium	1.4E-03	1.7E-08	7.6E-08
Cobalt	8.4E-05	1.0E-09	4.5E-09
Manganese	3.8E-04	4.7E-09	2.1E-08
Mercury	2.6E-04	3.2E-09	1.4E-08
Nickel	2.1E-03	2.6E-08	1.1E-07
Selenium	2.4E-05	3.0E-10	1.3E-09
Total HAP		**2.3E-05**	**1.0E-04**

[2] Emission factors from AP-42 Section 1.4 "Natural Gas Combustion" Tables 1.4-1, 1.4-2, & 1.4-3

[3] Emission Rate (lb/hr) = Rated Capacity (MMscf/hr) × Emission Factor (lb/MMscf).

[4] Annual Emissions $(tons/yr)_{Potential}$ = $(lb/hr)_{Emissions}$ × (Maximum Allowable Operating Hours, 8760 hr/yr) × (1 ton/2000 lb).

[5] GHG Emission factors from Tables C-1 and C-2, 40 CFR 98, Subpart C.

Company Name: **EQT Production, LLC**
Facility Name: **PEN15 Wellpad**
Project Description: **R13 Application**

Liquid Loading

Throughput 31,175,000 gal/yr
Capture Efficiency 70% non-tested tanker trucks
Control Efficiency 98% Combustor destruction efficiency

Liquid Loading Emissions

	Uncontrolled Emissions		Uncaptured Emissions		Controlled Emissions	
	lb/hr	tpy	lb/hr	tpy	lb/hr	tpy
Propane	163.44	42.49	49.03	12.75	2.29	0.59
Isobutane	34.47	8.96	10.34	2.69	0.48	0.13
n-Butane	77.98	20.27	23.39	6.08	1.09	0.28
Isopentane	22.79	5.92	6.84	1.78	0.32	0.08
n-Pentane	21.98	5.72	6.59	1.71	0.31	0.08
n-Hexane	17.62	4.58	5.29	1.37	0.25	0.06
Methylcyclopentane	<0.01	<0.01	<0.01	<0.01	<0.01	<0.01
Benzene	0.19	0.05	0.06	0.01	2.7E-03	7.0E-04
Cyclohexane	0.76	0.20	0.23	0.06	0.01	2.8E-03
n-Heptane	7.10	1.85	2.13	0.55	0.10	0.03
n-Octane	2.77	0.72	0.83	0.22	0.04	0.01
n-Nonane	0.38	0.10	0.12	0.03	0.01	1.4E-03
n-Decane	0.20	0.05	0.06	0.02	2.8E-03	7.2E-04
n-Undecane	<0.01	<0.01	<0.01	<0.01	<0.01	<0.01
Dodecane	<0.01	<0.01	<0.01	<0.01	<0.01	<0.01
Triethylene Glycol	<0.01	<0.01	<0.01	<0.01	<0.01	<0.01
Cyclopentane	<0.01	<0.01	<0.01	<0.01	<0.01	<0.01
Isohexane	7.16	1.86	2.15	0.56	0.10	0.03
3-Methylpentane	<0.01	<0.01	<0.01	<0.01	<0.01	<0.01
Neohexane	<0.01	<0.01	<0.01	<0.01	<0.01	<0.01
2,3-Dimethylbutane	<0.01	<0.01	<0.01	<0.01	<0.01	<0.01
Methylcyclohexane	<0.01	<0.01	<0.01	<0.01	<0.01	<0.01
Isooctane	<0.01	<0.01	<0.01	<0.01	<0.01	<0.01
Decane, 2-Methyl-	<0.01	<0.01	<0.01	<0.01	<0.01	<0.01
Toluene	0.33	0.08	0.10	0.03	4.6E-03	1.2E-03
m-Xylene	0.16	0.04	0.05	0.01	2.2E-03	5.7E-04
Ethylbenzene	0.01	3.7E-03	4.3E-03	1.1E-03	2.0E-04	5.2E-05
Total VOC Emissions:	357.34	92.91	107.20	27.87	5.00	1.30
Total HAP Emissions:	18.12	4.71	5.44	1.41	0.25	0.07

[1] Uncontrolled emissions calculation using Promax (sum of produced water and condensate).
[2] Hourly emissions assume two hours of loading per day, five days per week.

Company Name: EQT Production, LLC
Facility Name: PEN15 Wellpad
Project Description: R13 Application

Fugitive Emissions

Fugitive Emissions from Component Leaks

Facility Equipment Type[1]	Valves	Connectors	Open-Ended Lines	Pressure Relief Devices
Wellhead	8	38	0.5	0
Separators	1	6	0	0
Meters/Piping	12	45	0	0
Compressors	12	57	0	0
In-line heaters	14	65	2	1
Dehydrators	24	90	2	2

[1] Table W-1B to Subpart W of Part 98 —Default Average Component Counts for Major Onshore Natural Gas Production

Fugitive VOC/Total Emissions from Component Leaks

Equipment Type	Service	Emission Factors[1] (kg/hr/source)	Facility Equipment Count[2] (units)	TOC Annual Fugitive Emissions (tpy)	Weight Fraction VOC	Weight Fraction HAP	VOC Emissions[3] (tpy)	HAP Emissions[3] (tpy)
Pumps	Light Liquid	0.01990	14	2.69	1.00	0.04	2.69	0.11
Compressor	Gas	0.22800	2	4.40	0.14	0.01	0.61	0.03
Valves	Gas	0.00597	528	30.44	0.14	0.01	4.25	0.18
Pressure Relief Valves	Gas	0.10400	43	43.18	0.14	0.01	6.02	0.26
Open-Ended Lines	All	0.00170	38	0.62	0.14	0.01	0.09	3.7E-03
Connectors	All	0.00183	2,328	41.14	0.14	0.01	5.74	0.24
Intermittent Pneumatic Devices[4]	Gas	6.0	50	23.04	0.14	0.01	3.21	0.14
			Emission Totals:	**122.47**	**---**	**---**	**22.61**	**0.96**

[1] U.S. EPA. Office of Air Quality Planning and Standards. *Protocol for Equipment Leak Emission Estimates.* Table 2-1. (Research Triangle Park, NC: U.S. EPA EPA-453/R-95-017, 1995). SOCMI factors were used as it was representative of natural gas liquids extraction. The pneumatic controller value is from 40 CFR 98 Subpart W, Table W-1A (scf/hr) - intermittent devices. Pneumatics assume operations 1/3 of the year.

[2] Assumes one pump for each tank and one meter per wellhead. Pressure relief valves count includes one Emergency Pressure Relief valve and one lock-down hatch for each storage tank. Pneumatic devices assume 5 per well. A 50% compliance margin is added to the component counts based on Subpart W counts.

[3] Potential emissions VOC/HAP (tpy) = Emission factor (kg/hr/source) * Number of Sources * Weight % VOC/HAP x 2.2046 (lb/kg) x 8,760 (hr/yr) ÷ 2,000 (lb/ton)
Potential emissions VOC/HAP (tpy) = Gas volume vented (scf/yr) * Molar weight of natural gas (lb/lb-mol) * Weight % VOC/HAP ÷ 100 ÷ 379 (scf/lb-mol) ÷ 2,000 (lb/ton)

Fugitive Specific HAP Emissions from Component Leaks

Equipment Type	Service	Emission Factors[1] (kg/hr/source)	Facility Equipment Count[2] (units)	TOC Annual Fugitive Emissions (tpy)	Benzene Emissions[3] (tpy)	Toluene Emissions[3] (tpy)	Ethylbenzene Emissions[3] (tpy)	Xylene Emissions[3] (tpy)	n-Hexane Emissions[4] (tpy)
Pumps	Light Liquid	0.01990	14	2.69	2.1E-04	6.2E-04	<0.001	7.2E-04	0.01
Compressor	Gas	0.22800	2	4.40	3.5E-04	1.0E-03	<0.001	1.2E-03	0.01
Valves	Gas	0.00597	528	30.44	2.4E-03	0.01	<0.001	0.01	0.07
Pressure Relief Valves	Gas	0.10400	43	43.18	3.4E-03	0.01	<0.001	0.01	0.10
Open-Ended Lines	All	0.00170	38	0.62	4.8E-05	1.4E-04	<0.001	1.6E-04	1.5E-03
Connectors	All	0.00183	2,328	41.14	3.2E-03	0.01	<0.001	0.01	0.10
Intermittent Pneumatic Devices[4]	Gas	6.0	50	23.04	1.8E-03	0.01	<0.001	0.01	0.05
			Emission Totals:	**122.47**	**0.01**	**0.03**	**<0.001**	**0.04**	**0.35**

[1] U.S. EPA. Office of Air Quality Planning and Standards. *Protocol for Equipment Leak Emission Estimates.* Table 2-1. (Research Triangle Park, NC: U.S. EPA EPA-453/R-95-017, 1995). SOCMI factors were used as it was representative of natural gas liquids extraction. The pneumatic controller value is from 40 CFR 98 Subpart W, Table W-1A (scf/hr) - intermittent devices. Pneumatics assume operations 1/3 of the year.

[2] Assumes one pump for each tank and one meter per wellhead. Pressure relief valves count includes one Emergency Pressure Relief valve and one lock-down hatch for each storage tank. Pneumatic devices assume 5 per well. A 50% compliance margin is added to the component counts based on Subpart W counts.

[3] Potential emissions HAP (tpy) = Emission factor (kg/hr/source) * Number of Sources * Weight % HAP x 2.2046 (lb/kg) x 8,760 (hr/yr) ÷ 2,000 (lb/ton)

[4] Potential emissions VOC/HAP (tpy) = Gas volume vented (scf/yr) * Molar weight of natural gas (lb/lb-mol) * Weight % VOC/HAP ÷ 100 ÷ 379 (scf/lb-mol) ÷ 2,000 (lb/ton)

GHG Fugitive Emissions from Component Leaks

Component	Component Count	GHG Emission Factor[1] scf/hr/component	CH_4 Emissions[2,3] (tpy)	CO_2 Emissions[2,3] (tpy)	CO_2e Emissions[4] (tpy)
Pumps	14	0.01	0.02	1.7E-04	0.52
Compressor	2	4.17	1.25	0.01	31.17
Valves	528	0.027	2.13	0.02	53.28
Pressure Relief Devices	43	0.04	0.26	2.1E-03	6.43
Open-Ended Lines	38	0.061	0.34	2.8E-03	8.55
Connectors	2,328	0.003	1.04	0.01	26.10
Intermittent Pneumatic Devices	50	6.0	14.95	0.12	373.77
Total			**19.99**	**0.16**	**499.83**

[1] Population emission factors for gas service in the Eastern U.S. from *Table W-1A (Table W-5 for compressors) of Subpart W - Default Whole Gas Emission Factors for Onshore Production* , 40 CFR 98, Subpart W. Pneumatics assume operation 1/3 of year.

[2] Calculated in accordance with Equations W-32a, W-35 and W-36 in Subpart W of 40 CFR 98. See footnote 4 above for sample calculation.

[3] Potential emissions VOC/HAP (tpy) = Gas volume vented (scf/yr) * Molar weight of natural gas (lb/lb-mol) * Weight % VOC/HAP ÷ 100 ÷ 379 (scf/lb-mol) ÷ 2,000 (lb/ton)
Mole fractions of CH_4 and CO_2 based on gas analysis:
CH_4: 81% CO_2: 0.24%

[4] Carbon equivalent emissions (CO_2e) are based on the following Global Warming Potentials (GWP) from 40 CFR Part 98, Table A-1:
Carbon Dioxide (CO_2): 1
Methane (CH_4): 25

Fugitive Emissions from Venting

Source	Volume (scf/yr)	VOC Emissions (tpy)	Benzene Emissions (tpy)	Toluene Emissions (tpy)	Ethylbenzene Emissions (tpy)	Xylene Emissions (tpy)	n-Hexane Emissions (tpy)	HAP Emissions (tpy)	CH_4 Emissions (tpy)	CO_2 Emissions (tpy)	CO_2e Emissions (tpy)
Miscellaneous Gas Venting	1,000,000	3.67	2.1E-03	0.01	<0.001	0.01	0.06	0.16	17.06	0.14	426.68
Total		**3.67**	**2.1E-03**	**0.01**	**<0.001**	**0.01**	**0.06**	**0.16**	**17.06**	**0.14**	**426.68**

[1] VOC and HAP emissions are based on sum of the fractions of the pollutants in the site-specific gas analysis in those classifications, and are calculated in accordance with standard conversion methodology and factors.

[2] CH_4 and CO_2 emissions are based on fractions of these pollutants in the site-specific gas analysis, and are calculated in accordance with Equations W-35 and W-36 in Subpart W of 40 CFR 98.

[3] GHG (CO_2e) is carbon dioxide equivalent, which is the summation of CO_2 (GWP = 1) + CH_4 (GWP = 25) + N_2O (GWP = 298).

[4] Total gas volume emitted (and thus subsequent emissions values) is estimated based on engineering judgement and is conservative.

[5] Total gas volume emitted includes blowdowns and other venting activities.

[6] Potential emissions VOC/HAP (tpy) = Gas volume vented (scf/yr) * Molar weight of natural gas (lb/lb-mol) * Weight % VOC/HAP ÷ 100 ÷ 379 (scf/lb-mol) ÷ 2,000 (lb/ton)

[7] Potential emissions CH_4/CO_2 (tpy) = Gas volume vented (scf/yr) * Mole % CH_4/CO_2 ÷ 100 * Density CH_4/CO_2 (kg/scf) * 1,000 (g/kg) ÷ 453.6 (g/lb) ÷ 2,000 (lb/ton)

Company Name: EQT Production, LLC
Facility Name: PEN15 Wellpad
Project Description: R13 Application

Haul Roads

Estimated Potential Road Fugitive Emissions

Unpaved Road Emissions

Unpaved Roads: $E\ (lb/VMT) = k(s/12)^a(W/3)^b*[(365-p)/365]$

	PM	PM_{10}	$PM_{2.5}$	
k Factor (lb/VMT)	4.9	1.5	0.15	AP-42 Table 13.2.2-2 (Final, 11/06)
Silt content, s	4.8 %			AP-42 Table 13.2.2-1 (11/06), for Sand and Gravel Processing
Number of Rain Days, p	150			AP-42 Figure 13.2.1-2
a	0.7	0.9	0.9	AP-42 Table 13.2.2-2 (Final, 11/06)
b	0.45	0.45	0.45	AP-42 Table 13.2.2-2 (Final, 11/06)

Description	Weight of Empty Truck (tons)	Weight of Truck w/ Max Load (tons)	Mean Vehicle Weight (tons)	Length of Unpaved Road Traveled (mile)	Trips Per Year	Mileage Per Year	Control (%)	Emissions (tpy) PM	PM_{10}	$PM_{2.5}$
Liquids Hauling	20	40	30	0.50	7,794	7,764	0	16.63	4.24	0.42
Employee Vehicles	3	3	3	0.50	200	199	0	0.15	0.04	0.00
Total Potential Emissions								**16.78**	**4.28**	**0.43**

Company Name: **EQT Production, LLC**
Facility Name: **PEN15 Wellpad**
Project Description: **R13 Application**

Gas Analysis

Sample Location: WEU-1 Gas Analysis
Sample Date: 5/20/2013
HHV (Btu/scf): 1,217 Note: A conservatively low BTU content of 1050 was used for calculations

Constituent	Natural Gas Stream Speciation (Mole %)	Molecular Weight	Molar Weight	Average Weight Fraction	Natural Gas Stream Speciation (Wt. %)
Carbon Dioxide	0.240	44.01	1.1E-01	5.3E-03	5.3E-01
Nitrogen	0.428	28.01	1.2E-01	6.0E-03	6.0E-01
Methane	80.616	16.04	1.3E+01	6.5E-01	6.5E+01
Ethane	13.296	30.07	4.0E+00	2.0E-01	2.0E+01
Propane	3.541	44.10	1.6E+00	7.8E-02	7.8E+00
Isobutane	0.426	58.12	2.5E-01	1.2E-02	1.2E+00
n-Butane	0.746	58.12	4.3E-01	2.2E-02	2.2E+00
Isopentane	0.191	72.15	1.4E-01	6.9E-03	6.9E-01
n-Pentane	0.164	72.15	1.2E-01	5.9E-03	5.9E-01
n-Hexane	0.055	86.18	4.7E-02	2.4E-03	2.4E-01
Cyclohexane	0.009	84.16	7.6E-03	3.8E-04	3.8E-02
Other Hexanes	0.091	86.18	7.8E-02	3.9E-03	3.9E-01
Heptanes	0.029	100.21	2.9E-02	1.4E-03	1.4E-01
2,2,4-Trimethylpentane	0.052	114.23	5.9E-02	3.0E-03	3.0E-01
Benzene*	0.002	78.11	1.6E-03	7.8E-05	7.8E-03
Toluene*	0.005	92.14	4.6E-03	2.3E-04	2.3E-02
Ethylbenzene*	<0.001	106.17	<0.001	<0.001	<0.001
Xylenes*	0.005	106.16	5.3E-03	2.7E-04	2.7E-02
C8 + Heavies	0.043	114.23	4.9E-02	2.5E-03	2.5E-01
Totals	100		19.94	1.00	100

TOC (Total)	99.27	98.87
VOC (Total)	5.36	13.95
HAP (Total)	0.12	0.59

PEN 15
Plant Schematic

Client Name:	EQT Production	Job: V1.0
Location:	PEN-15 Wellpad	
Flowsheet:	PEN 15	

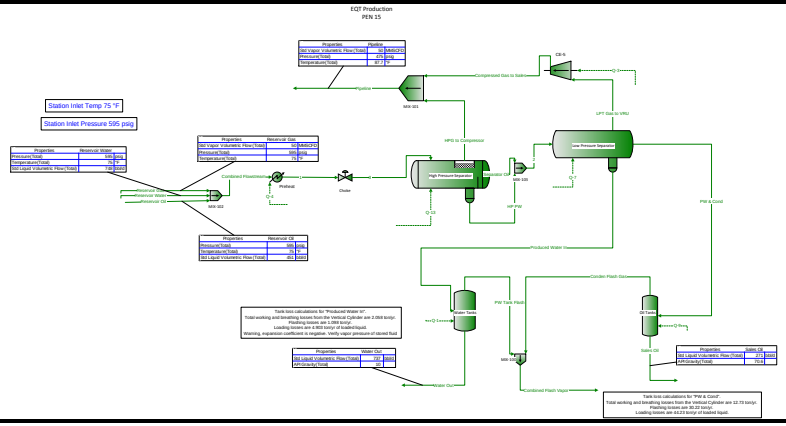

* User Specified Values
? Extrapolated or Approximate Values

ProMax 4.0.16071.0
Copyright © 2002-2016 BRE Group, Ltd.
Licensed to Trinity Consultants, Inc. and Affiliates

Process Streams Report
All Streams
Tabulated by Total Phase

Client Name:	EQT Production	Job: V1.0
Location:	PEN-15 Wellpad	
Flowsheet:	PEN 15	

Connections

	Combined Flash Vapor	Combined Flowstream	Compressed Gas to Sales	Conden Flash Gas	HP PW
From Block	MIX-100	MIX-102	CE-5	Oil Tanks	High Pressure Separator
To Block	--	Preheat	MIX-101	MIX-100	MIX-103

Stream Composition

Mole Fraction	Combined Flash Vapor	Combined Flowstream	Compressed Gas to Sales	Conden Flash Gas	HP PW
Nitrogen	0.000254809	0.00412542	0.000589905	0.000243093	1.73507E-06
Methane	0.245667	0.706822	0.279201	0.241135	0.000544246
CO2	0.00179543	0.00126665	0.00150013	0.00177977	1.72035E-05
Ethane	0.300536	0.128637	0.214895	0.301818	0.000117223
Propane	0.198073	0.0348546	0.15219	0.199594	1.82095E-05
Isobutane	0.0401851	0.00467459	0.0363521	0.0408157	1.47304E-06
n-Butane	0.092541	0.00936843	0.089112	0.0928553	4.23482E-06
Isopentane	0.0262899	0.00227299	0.0309818	0.0265139	5.27175E-07
n-Pentane	0.0271928	0.0023274	0.0343657	0.0273763	2.35903E-07
n-Hexane	0.0226279	0.00230726	0.0390694	0.0228426	1.33033E-07
Methylcyclopentane	0	0	0	0	0
Benzene	0.000135867	1.31601E-05	0.000219039	0.000134261	4.18541E-07
Cyclohexane	0.00106101	0.000106936	0.00174549	0.0010456	8.30288E-08
n-Heptane	0.00787855	0.00135486	0.0178121	0.0079885	2.9875E-08
n-Octane	0.00316024	0.00122799	0.00947823	0.00321856	4.34232E-09
n-Nonane	0.000438245	0.000471006	0.0017689	0.000448969	5.58118E-10
n-Decane	0.000224456	0.000712695	0.00118434	0.000230797	9.29732E-11
n-Undecane	0	0	0	0	0
Dodecane	0	0	0	0	0
Water	0.0243883	0.0986412	0.0773682	0.0243871	0.999293
Triethylene Glycol	0	0	0	0	0
Oxygen	0	0	0	0	0
Argon	0	0	0	0	0
Carbon Monoxide	0	0	0	0	0
Cyclopentane	0	0	0	0	0
Isohexane	0.00681269	0.000622781	0.0103997	0.00685553	5.2073E-08
3-Methylpentane	0	0	0	0	0
Neohexane	0	0	0	0	0
2,3-Dimethylbutane	0	0	0	0	0
Methylcyclohexane	0	0	0	0	0
Isooctane	0	0	0	0	0
Decane, 2-Methyl-	0	0	0	0	0
Toluene	0.00044316	7.3208E-05	0.000937956	0.000433776	1.02603E-06
m-Xylene	0.000270979	0.000111506	0.000762745	0.000260282	3.96885E-07
Ethylbenzene	2.32929E-05	9.14115E-06	6.60833E-05	2.27393E-05	4.60369E-08

Mass Flow	Combined Flash Vapor lb/h	Combined Flowstream lb/h	Compressed Gas to Sales lb/h	Conden Flash Gas lb/h	HP PW lb/h
Nitrogen	0.00272679	710.093	0.365465	0.00251978	0.0291133
Methane	1.50552	69672.6	99.0571	1.43138	5.22968
CO2	0.0301845	342.52	1.46007	0.0289823	0.453495
Ethane	3.45213	23766.5	142.904	3.35805	2.11126
Propane	3.33651	9443.58	148.415	3.25661	0.480953
Isobutane	0.892231	1669.43	46.7271	0.877794	0.0512822
n-Butane	2.05469	3345.72	114.545	1.99697	0.14743
Isopentane	0.724582	1007.65	49.435	0.707823	0.0227821
n-Pentane	0.749468	1031.77	54.8344	0.730847	0.0101947
n-Hexane	0.744898	1221.69	74.4591	0.72837	0.00686674
Methylcyclopentane	0	0	0	0	0
Benzene	0.00405416	6.31623	0.378386	0.00388052	0.0195823

ProMax 4.0.16071.0
Copyright © 2002-2016 BRE Group, Ltd.
Licensed to Trinity Consultants, Inc. and Affiliates

Process Streams Report
All Streams
Tabulated by Total Phase

Client Name:	EQT Production	Job: V1.0
Location:	PEN-15 Wellpad	
Flowsheet:	PEN 15	

Mass Flow	Combined Flash Vapor lb/h	Combined Flowstream lb/h	Compressed Gas to Sales lb/h	Conden Flash Gas lb/h	HP PW lb/h
Cyclohexane	0.0341108	55.2977	3.24877	0.0325606	0.00418544
n-Heptane	0.301573	834.165	39.4721	0.296186	0.00179305
n-Octane	0.1379	861.886	23.9442	0.136038	0.000297102
n-Nonane	0.0214715	371.178	5.01738	0.0213066	4.28756E-05
n-Decane	0.0121998	623.066	3.7267	0.0121507	7.92348E-06
n-Undecane	0	0	0	0	0
Dodecane	0	0	0	0	0
Water	0.167839	10918.9	30.8249	0.162564	10783.1
Triethylene Glycol	0	0	0	0	0
Oxygen	0	0	0	0	0
Argon	0	0	0	0	0
Carbon Monoxide	0	0	0	0	0
Cyclopentane	0	0	0	0	0
Isohexane	0.22427	329.761	19.82	0.218599	0.00268785
3-Methylpentane	0	0	0	0	0
Neohexane	0	0	0	0	0
2,3-Dimethylbutane	0	0	0	0	0
Methylcyclohexane	0	0	0	0	0
Isooctane	0	0	0	0	0
Decane, 2-Methyl-	0	0	0	0	0
Toluene	0.0155981	41.4458	1.91127	0.0147887	0.0566255
m-Xylene	0.0109897	72.7381	1.79085	0.0102246	0.025238
Ethylbenzene	0.000944661	5.96298	0.155157	0.000893267	0.0029275

Volumetric Flow	Combined Flash Vapor ft^3/h	Combined Flowstream ft^3/h	Compressed Gas to Sales ft^3/h	Conden Flash Gas ft^3/h	HP PW gpm
Nitrogen	0.0372953	254.669	0.270274	0.0344669	7.87207E-05
Methane	35.7742	38342.6	122.217	34.0145	0.0258368
CO2	0.260438	60.4196	0.635684	0.250078	0.000716324
Ethane	43.3258	5102.59	86.1061	42.146	0.00711711
Propane	28.3136	984.237	56.8996	27.6352	0.00138568
Isobutane	5.70362	92.5346	12.7806	5.61105	0.000135037
n-Butane	13.1132	155.458	30.7544	12.7441	0.000383282
Isopentane	3.69947	20.6992	9.99422	3.6136	5.51232E-05
n-Pentane	3.82073	18.0614	10.9241	3.72545	2.4713E-05
n-Hexane	3.14921	7.7653	11.272	3.0789	1.58172E-05
Methylcyclopentane	0	0	0	0	0
Benzene	0.0190533	0.0704082	0.0644559	0.0182355	3.67113E-05
Cyclohexane	0.148242	0.455958	0.501128	0.141488	8.50115E-06
n-Heptane	1.08735	6.14482	4.65742	1.06774	3.99511E-06
n-Octane	0.432287	11.2456	2.2256	0.426353	6.41024E-07
n-Nonane	0.0593358	6.31926	0.365663	0.0588641	9.03106E-08
n-Decane	0.0301237	11.7182	0.214558	0.0299933	1.64243E-08
n-Undecane	0	0	0	0	0
Dodecane	0	0	0	0	0
Water	3.54606	210.827	32.2599	3.43481	21.6293
Triethylene Glycol	0	0	0	0	0
Oxygen	0	0	0	0	0
Argon	0	0	0	0	0
Carbon Monoxide	0	0	0	0	0
Cyclopentane	0	0	0	0	0
Isohexane	0.950109	2.47475	3.06343	0.925959	6.2006E-06
3-Methylpentane	0	0	0	0	0
Neohexane	0	0	0	0	0
2,3-Dimethylbutane	0	0	0	0	0
Methylcyclohexane	0	0	0	0	0
Isooctane	0	0	0	0	0
Decane, 2-Methyl-	0	0	0	0	0
Toluene	0.0615774	0.301941	0.247922	0.058374	0.000105066

Copyright © 2002-2016 BRE Group, Ltd.
Licensed to Trinity Consultants, Inc. and Affiliates

Process Streams Report
All Streams
Tabulated by Total Phase

Client Name:	EQT Production	Job: V1.0
Location:	PEN-15 Wellpad	
Flowsheet:	PEN 15	

Volumetric Flow	Combined Flash Vapor ft^3/h	Combined Flowstream ft^3/h	Compressed Gas to Sales ft^3/h	Conden Flash Gas ft^3/h	HP PW gpm
m-Xylene	0.0373113	0.821877	0.18047	0.0347073	4.64443E-05
Ethylbenzene	0.00321004	0.0660139	0.0158365	0.00303484	5.35859E-06

Stream Properties

Property	Units	Combined Flash Vapor	Combined Flowstream	Compressed Gas to Sales	Conden Flash Gas	HP PW
Temperature	°F	69.9993	74.4428	404.136	70	85
Pressure	psig	0.25	595	475 *	0.25 *	475
Mole Fraction Vapor		1	0.890458	1	1	0
Mole Fraction Light Liquid		0	0.0115318	0	0	1
Mole Fraction Heavy Liquid		0	0.09801	0	0	0
Molecular Weight	lb/lbmol	37.7583	20.5605	38.9993	37.9131	18.017
Mass Density	lb/ft^3	0.100464	2.78944	2.23646	0.100886	62.1023
Mass Flow	lb/h	14.4239	126332	862.492	14.0285	10791.7
Vapor Volumetric Flow	ft^3/h	143.572	45289.5	385.65	139.053	173.774
Liquid Volumetric Flow	gpm	17.8999	5646.48	48.0811	17.3365	21.6653
Std Vapor Volumetric Flow	MMSCFD	0.00347916	55.9611	0.20142	0.00336998	5.45524
Specific Gravity		1.30369		1.34654	1.30904	0.995723
API Gravity						10.0595
Net Ideal Gas Heating Value	Btu/ft^3	1966.59	1027.52	1973.26	1974.4	0.7563
Net Liquid Heating Value	Btu/lb	19613.9	18818.4	19029.1	19610.9	-1043.02
Std Liquid Volumetric Flow	sgpm	0.0623079	696.049	3.51189	0.0604988	21.607

Remarks

ProMax 4.0.16071.0
Copyright © 2002-2016 BRE Group, Ltd.
Licensed to Trinity Consultants, Inc. and Affiliates

Process Streams Report
All Streams
Tabulated by Total Phase

Client Name:	EQT Production	Job: V1.0
Location:	PEN-15 Wellpad	
Flowsheet:	PEN 15	

Connections

	HPG to Compressor	LPT Gas to VRU	Pipeline	Produced Water In	PW & Cond
From Block	High Pressure Separator	Low Pressure Separator	MIX-101	Low Pressure Separator	Low Pressure Separator
To Block	MIX-101	CE-5	--	Water Tanks	Oil Tanks

Stream Composition

Mole Fraction	HPG to Compressor	LPT Gas to VRU	Pipeline	Produced Water In	PW & Cond
Nitrogen	0.00460771	0.000589905	0.00459161	2.01649E-08	3.67415E-06
Methane	0.788717	0.279201	0.786676	1.76088E-05	0.00453893
CO2	0.00140905	0.00150013	0.00140942	1.25456E-06	5.03633E-05
Ethane	0.142814	0.214895	0.143103	1.53752E-05	0.014112
Propane	0.0381982	0.15219	0.0386548	7.03082E-06	0.02813
Isobutane	0.00500876	0.0363521	0.00513432	8.37076E-07	0.0139652
n-Butane	0.00988479	0.089112	0.0102022	4.01244E-06	0.0458083
Isopentane	0.00225026	0.0309818	0.00236536	7.4462E-07	0.0335424
n-Pentane	0.00224077	0.0343657	0.00236946	5.93652E-07	0.0450636
n-Hexane	0.00174739	0.0390694	0.00189691	4.30996E-07	0.136895
Methylcyclopentane	0	0	0	0	0
Benzene	9.8826E-06	0.000219039	1.07205E-05	6.91347E-07	0.000785827
Cyclohexane	7.65626E-05	0.00174549	8.32484E-05	1.8228E-07	0.00729347
n-Heptane	0.000682401	0.0178121	0.000751024	1.11698E-07	0.154415
n-Octane	0.000321911	0.00947823	0.000358592	2.94528E-08	0.205666
n-Nonane	5.30337E-05	0.0017689	5.99076E-05	2.34533E-09	0.0947223
n-Decane	3.42323E-05	0.00118434	3.88397E-05	5.91923E-10	0.153896
n-Undecane	0	0	0	0	0
Dodecane	0	0	0	0	0
Water	0.00136669	0.0773682	0.00167116	0.999947	0.00304617
Triethylene Glycol	0	0	0	0	0
Oxygen	0	0	0	0	0
Argon	0	0	0	0	0
Carbon Monoxide	0	0	0	0	0
Cyclopentane	0	0	0	0	0
Isohexane	0.000515358	0.0103997	0.000554955	1.57252E-07	0.0281904
3-Methylpentane	0	0	0	0	0
Neohexane	0	0	0	0	0
2,3-Dimethylbutane	0	0	0	0	0
Methylcyclohexane	0	0	0	0	0
Isooctane	0	0	0	0	0
Decane, 2-Methyl-	0	0	0	0	0
Toluene	3.49027E-05	0.000937956	3.85204E-05	2.27655E-06	0.00871379
m-Xylene	2.50274E-05	0.000762745	2.79827E-05	1.16027E-06	0.0195838
Ethylbenzene	2.1707E-06	6.60833E-05	2.42674E-06	1.08355E-07	0.00157809

Mass Flow	HPG to Compressor lb/h	LPT Gas to VRU lb/h	Pipeline lb/h	Produced Water In lb/h	PW & Cond lb/h
Nitrogen	709.724	0.365465	710.089	0.000337134	0.00278532
Methane	69571.4	99.0571	69670.5	0.168594	1.97051
CO2	340.967	1.46007	342.427	0.0329517	0.059981
Ethane	23611.8	142.904	23754.7	0.275919	11.4832
Propane	9261.41	148.415	9409.82	0.18503	33.5675
Isobutane	1600.7	46.7271	1647.43	0.0290367	21.9655
n-Butane	3158.99	114.545	3273.53	0.139185	72.0509
Isopentane	892.688	49.435	942.123	0.032063	65.4903
n-Pentane	888.923	54.8344	943.757	0.0255624	87.9849
n-Hexane	827.966	74.4591	902.426	0.0221665	319.244
Methylcyclopentane	0	0	0	0	0
Benzene	4.2445	0.378386	4.62289	0.0322295	1.66111

Copyright © 2002-2016 BRE Group, Ltd.
Licensed to Trinity Consultants, Inc. and Affiliates

Process Streams Report
All Streams
Tabulated by Total Phase

Client Name:	EQT Production	Job: V1.0
Location:	PEN-15 Wellpad	
Flowsheet:	PEN 15	

Mass Flow	HPG to Compressor lb/h	LPT Gas to VRU lb/h	Pipeline lb/h	Produced Water In lb/h	PW & Cond lb/h
Cyclohexane	35.429	3.24877	38.6778	0.00915553	16.6108
n-Heptane	375.971	39.4721	415.444	0.00667978	418.715
n-Octane	202.185	23.9442	226.129	0.0020079	635.755
n-Nonane	37.3995	5.01738	42.4169	0.000179523	328.761
n-Decane	26.7808	3.7267	30.5076	5.02638E-05	592.558
n-Undecane	0	0	0	0	0
Dodecane	0	0	0	0	0
Water	135.379	30.8249	166.203	10751.2	1.48508
Triethylene Glycol	0	0	0	0	0
Oxygen	0	0	0	0	0
Argon	0	0	0	0	0
Carbon Monoxide	0	0	0	0	0
Cyclopentane	0	0	0	0	0
Isohexane	244.192	19.82	264.012	0.00808761	65.7413
3-Methylpentane	0	0	0	0	0
Neohexane	0	0	0	0	0
2,3-Dimethylbutane	0	0	0	0	0
Methylcyclohexane	0	0	0	0	0
Isooctane	0	0	0	0	0
Decane, 2-Methyl-	0	0	0	0	0
Toluene	17.6823	1.91127	19.5936	0.125187	21.7271
m-Xylene	14.6095	1.79085	16.4004	0.0735158	56.2642
Ethylbenzene	1.26713	0.155157	1.42228	0.00686546	4.53383

Volumetric Flow	HPG to Compressor ft^3/h	LPT Gas to VRU ft^3/h	Pipeline ft^3/h	Produced Water In gpm	PW & Cond gpm
Nitrogen	317.313	1.60872	319.091	9.77055E-07	1.15632E-05
Methane	49455.4	751.334	49835	0.000886019	0.014288
CO2	81.0339	3.99433	82.0048	5.50257E-05	9.38941E-05
Ethane	7250.66	563.6	7364.41	0.000977873	0.0544874
Propane	1582.76	390.477	1629.69	0.000557458	0.137871
Isobutane	172.041	91.5756	180.206	7.97561E-05	0.0839658
n-Butane	313.044	223.394	330.825	0.000377107	0.26636
Isopentane	54.7238	76.2439	59.38	8.07153E-05	0.226789
n-Pentane	51.0734	84.2231	55.8795	6.44464E-05	0.301752
n-Hexane	23.45	93.3796	27.0351	5.30308E-05	1.03503
Methylcyclopentane	0	0	0	0	0
Benzene	0.193602	0.531814	0.218029	6.25173E-05	0.00391788
Cyclohexane	1.21162	4.20534	1.3824	1.92578E-05	0.0450781
n-Heptane	2.87512	41.557	3.8609	1.54443E-05	1.30692
n-Octane	-1.25855	21.5797	-0.974715	4.49285E-06	1.91022
n-Nonane	-0.722697	3.91523	-0.686383	3.92005E-07	0.959254
n-Decane	-0.781387	2.55538	-0.696344	1.07988E-07	1.69526
n-Undecane	0	0	0	0	0
Dodecane	0	0	0	0	0
Water	82.1539	206.209	90.7205	21.944	-0.00260107
Triethylene Glycol	0	0	0	0	0
Oxygen	0	0	0	0	0
Argon	0	0	0	0	0
Carbon Monoxide	0	0	0	0	0
Cyclopentane	0	0	0	0	0
Isohexane	8.15936	24.9913	9.23772	1.9385E-05	0.215831
3-Methylpentane	0	0	0	0	0
Neohexane	0	0	0	0	0
2,3-Dimethylbutane	0	0	0	0	0
Methylcyclohexane	0	0	0	0	0
Isooctane	0	0	0	0	0
Decane, 2-Methyl-	0	0	0	0	0
Toluene	0.337601	2.2202	0.403807	0.000240148	0.0516837

Copyright © 2002-2016 BRE Group, Ltd.
Licensed to Trinity Consultants, Inc. and Affiliates

Process Streams Report
All Streams
Tabulated by Total Phase

Client Name:	EQT Production	Job: V1.0
Location:	PEN-15 Wellpad	
Flowsheet:	PEN 15	

Volumetric Flow	HPG to Compressor ft^3/h	LPT Gas to VRU ft^3/h	Pipeline ft^3/h	Produced Water In gpm	PW & Cond gpm
m-Xylene	0.0414641	1.7602	0.0744466	0.000139823	0.133922
Ethylbenzene	0.00538514	0.1529	0.00838919	1.29868E-05	0.0107707

Stream Properties

Property	Units	HPG to Compressor	LPT Gas to VRU	Pipeline	Produced Water In	PW & Cond
Temperature	°F	85 *	155.244	87.7435	155.244	155.244
Pressure	psig	475 *	40	475	40	40 *
Mole Fraction Vapor		1	1	0.999771	0	0
Mole Fraction Light Liquid		0	0	4.69245E-05	1	1
Mole Fraction Heavy Liquid		0	0	0.000182448	0	0
Molecular Weight	lb/lbmol	20.3621	38.9993	20.4368	18.0163	101.902
Mass Density	lb/ft^3	1.88504	0.333072	1.88077	61.0801	40.6831
Mass Flow	lb/h	111960	862.492	112822	10752.4	2757.63
Vapor Volumetric Flow	ft^3/h	59393.8	2589.51	59987.1	176.038	67.7833
Liquid Volumetric Flow	gpm	7404.94	322.848	7478.91	21.9476	8.4509
Std Vapor Volumetric Flow	MMSCFD	50.0776	0.20142	50.279	5.43557	0.246467
Specific Gravity		0.703049	1.34654		0.979333	0.652296
API Gravity					10.0011	70.6824
Net Ideal Gas Heating Value	Btu/ft^3	1114.86	1973.26	1118.3	0.099342	5166.39
Net Liquid Heating Value	Btu/lb	20719.2	19029.1	20706.2	-1057.57	19080.1
Std Liquid Volumetric Flow	sgpm	663.08	3.51189	666.591	21.4975	7.95997

Remarks

ProMax 4.0.16071.0
Copyright © 2002-2016 BRE Group, Ltd.
Licensed to Trinity Consultants, Inc. and Affiliates

Process Streams Report
All Streams
Tabulated by Total Phase

Client Name:	EQT Production	Job: V1.0
Location:	PEN-15 Wellpad	
Flowsheet:	PEN 15	

Connections

	PW Tank Flash	Reservoir Gas	Reservoir Oil	Reservoir Water	Sales Oil
From Block	Water Tanks	--	--	--	Oil Tanks
To Block	MIX-100	MIX-102	MIX-102	MIX-102	--

Stream Composition

Mole Fraction	PW Tank Flash	Reservoir Gas	Reservoir Oil	Reservoir Water	Sales Oil
Nitrogen	0.000616419	0.00461725 *	0 *	0 *	3.55143E-07
Methane	0.385536	0.790795 *	0.03336 *	0 *	0.00125906
CO2	0.00227863	0.00141608 *	0.00018 *	0 *	2.63889E-05
Ethane	0.260978	0.143887 *	0.00973 *	0 *	0.0101237
Propane	0.151133	0.0387181 *	0.03309 *	0 *	0.0257531
Isobutane	0.0207195	0.00503928 *	0.02184 *	0 *	0.0135929
n-Butane	0.0828392	0.00975454 *	0.08286 *	0 *	0.0451561
Isopentane	0.019376	0.00201911 *	0.05951 *	0 *	0.0336399
n-Pentane	0.0215292	0.0018671 *	0.08365 *	0 *	0.0453088
n-Hexane	0.0159994	0.0018861 *	0.07894 *	0 *	0.138476
Methylcyclopentane	0	0 *	0 *	0 *	0
Benzene	0.000185437	0 *	0.00167 *	0 *	0.00079486
Cyclohexane	0.00153659	0 *	0.01357 *	0 *	0.00738008
n-Heptane	0.00448488	0 *	0.17193 *	0 *	0.156445
n-Octane	0.00136017	0 *	0.15583 *	0 *	0.208472
n-Nonane	0.000107242	0 *	0.05977 *	0 *	0.0960292
n-Decane	2.87388E-05	0 *	0.09044 *	0 *	0.156027
n-Undecane	0	0 *	0 *	0 *	0
Dodecane	0	0 *	0 *	0 *	0
Water	0.0244281	0 *	0 *	1 *	0.00275033
Triethylene Glycol	0	0 *	0 *	0 *	0
Oxygen	0	0 *	0 *	0 *	0
Argon	0	0 *	0 *	0 *	0
Carbon Monoxide	0	0 *	0 *	0 *	0
Cyclopentane	0	0 *	0 *	0 *	0
Isohexane	0.00549021	0 *	0.07903 *	0 *	0.0284862
3-Methylpentane	0	0 *	0 *	0 *	0
Neohexane	0	0 *	0 *	0 *	0
2,3-Dimethylbutane	0	0 *	0 *	0 *	0
Methylcyclohexane	0	0 *	0 *	0 *	0
Isooctane	0	0 *	0 *	0 *	0
Decane, 2-Methyl-	0	0 *	0 *	0 *	0
Toluene	0.000732782	0 *	0.00929 *	0 *	0.00882857
m-Xylene	0.000601162	0 *	0.01415 *	0 *	0.0198517
Ethylbenzene	4.0382E-05	0 *	0.00116 *	0 *	0.00159965

Mass Flow	PW Tank Flash lb/h	Reservoir Gas lb/h	Reservoir Oil lb/h	Reservoir Water lb/h	Sales Oil lb/h
Nitrogen	0.000207009	710.093 *	0 *	0 *	0.000265548
Methane	0.0741451	69646.7 *	25.9132 *	0 *	0.539127
CO2	0.00120218	342.136 *	0.383569 *	0 *	0.0309986
Ethane	0.0940741	23752.3 *	14.1663 *	0 *	8.12514
Propane	0.0798917	9372.93 *	70.6507 *	0 *	30.3109
Isobutane	0.0144367	1607.96 *	61.4637 *	0 *	21.0877
n-Butane	0.0577198	3112.53 *	233.191 *	0 *	70.0539
Isopentane	0.0167587	799.751 *	207.895 *	0 *	64.7824
n-Pentane	0.0186211	739.541 *	292.226 *	0 *	87.2541
n-Hexane	0.0165285	892.306 *	329.386 *	0 *	318.516
Methylcyclopentane	0	0 *	0 *	0 *	0
Benzene	0.000173644	0 *	6.31623 *	0 *	1.65723
Cyclohexane	0.00155028	0 *	55.2977 *	0 *	16.5782

Copyright © 2002-2016 BRE Group, Ltd.
Licensed to Trinity Consultants, Inc. and Affiliates

Process Streams Report
All Streams
Tabulated by Total Phase

Client Name:	EQT Production	Job: V1.0
Location:	PEN-15 Wellpad	
Flowsheet:	PEN 15	

Mass Flow	PW Tank Flash lb/h	Reservoir Gas lb/h	Reservoir Oil lb/h	Reservoir Water lb/h	Sales Oil lb/h
n-Heptane	0.00538733	0 *	834.165 *	0 *	418.419
n-Octane	0.00186258	0 *	861.886 *	0 *	635.619
n-Nonane	0.000164888	0 *	371.178 *	0 *	328.74
n-Decane	4.9019E-05	0 *	623.066 *	0 *	592.546
n-Undecane	0	0 *	0 *	0 *	0
Dodecane	0	0 *	0 *	0 *	0
Water	0.00527568	0 *	0 *	10918.9 *	1.32251
Triethylene Glycol	0	0 *	0 *	0 *	0
Oxygen	0	0 *	0 *	0 *	0
Argon	0	0 *	0 *	0 *	0
Carbon Monoxide	0	0 *	0 *	0 *	0
Cyclopentane	0	0 *	0 *	0 *	0
Isohexane	0.00567178	0 *	329.761 *	0 *	65.5227
3-Methylpentane	0	0 *	0 *	0 *	0
Neohexane	0	0 *	0 *	0 *	0
2,3-Dimethylbutane	0	0 *	0 *	0 *	0
Methylcyclohexane	0	0 *	0 *	0 *	0
Isooctane	0	0 *	0 *	0 *	0
Decane, 2-Methyl-	0	0 *	0 *	0 *	0
Toluene	0.000809399	0 *	41.4458 *	0 *	21.7123
m-Xylene	0.000765103	0 *	72.7381 *	0 *	56.254
Ethylbenzene	5.13945E-05	0 *	5.96298 *	0 *	4.53294

Volumetric Flow	PW Tank Flash ft^3/h	Reservoir Gas ft^3/h	Reservoir Oil gpm	Reservoir Water gpm	Sales Oil gpm
Nitrogen	0.0028248	255.038	0	0	8.44425E-07
Methane	1.75892	38470.8	0.156958	0	0.00311251
CO2	0.0103596	60.9495	0.000517916	0	3.68493E-05
Ethane	1.18027	5168.6	0.0590103	0	0.0329322
Propane	0.678495	1008.01	0.260846	0	0.11045
Isobutane	0.0924557	93.5142	0.213451	0	0.0729504
n-Butane	0.369091	153.019	0.786518	0	0.235213
Isopentane	0.0858121	16.0084	0.662071	0	0.206461
n-Pentane	0.095224	11.7685	0.924052	0	0.275878
n-Hexane	0.0701952	-6.84247	0.992198	0	0.962021
Methylcyclopentane	0	0	0	0	0
Benzene	0.000818746	0	0.0140626	0	0.00368718
Cyclohexane	0.00676336	0	0.140829	0	0.0424254
n-Heptane	0.0195339	0	2.43277	0	1.22604
n-Octane	0.0058799	0	2.43045	0	1.80305
n-Nonane	0.000459579	0	1.02	0	0.909548
n-Decane	0.000122228	0	1.68318	0	1.61286
n-Undecane	0	0	0	0	0
Dodecane	0	0	0	0	0
Water	0.111278	0	0	21.8629	0.00197209
Triethylene Glycol	0	0	0	0	0
Oxygen	0	0	0	0	0
Argon	0	0	0	0	0
Carbon Monoxide	0	0	0	0	0
Cyclopentane	0	0	0	0	0
Isohexane	0.0241311	0	1.00341	0	0.200048
3-Methylpentane	0	0	0	0	0
Neohexane	0	0	0	0	0
2,3-Dimethylbutane	0	0	0	0	0
Methylcyclohexane	0	0	0	0	0
Isooctane	0	0	0	0	0
Decane, 2-Methyl-	0	0	0	0	0
Toluene	0.00320974	0	0.0935102	0	0.0491584
m-Xylene	0.00261309	0	0.164807	0	0.128146

Copyright © 2002-2016 BRE Group, Ltd.
Licensed to Trinity Consultants, Inc. and Affiliates

Process Streams Report
All Streams
Tabulated by Total Phase

Client Name:	EQT Production	Job: V1.0
Location:	PEN-15 Wellpad	
Flowsheet:	PEN 15	

Volumetric Flow	PW Tank Flash ft^3/h	Reservoir Gas ft^3/h	Reservoir Oil gpm	Reservoir Water gpm	Sales Oil gpm
Ethylbenzene	0.000175662	0	0.0134774	0	0.0103108

Stream Properties

Property	Units	PW Tank Flash	Reservoir Gas	Reservoir Oil	Reservoir Water	Sales Oil
Temperature	°F	70 *	75 *	75 *	75 *	70 *
Pressure	psig	0.25 *	595 *	595 *	595 *	0.25
Mole Fraction Vapor		1	1	0	0	0
Mole Fraction Light Liquid		0	0	1	1	0.997662
Mole Fraction Heavy Liquid		0	0	0	0	0.0023376
Molecular Weight	lb/lbmol	32.9784	20.2146	91.6377	18.0153	102.789
Mass Density	lb/ft^3	0.0874925	2.45355	42.3836	62.2664	43.3739
Mass Flow	lb/h	0.395346	110976	4437.09	10918.9	2743.6
Vapor Volumetric Flow	ft^3/h	4.51863	45230.9	104.689	175.358	63.2547
Liquid Volumetric Flow	gpm	0.563361	5639.18	13.0521	21.8629	7.8863
Std Vapor Volumetric Flow	MMSCFD	0.000109182	50 *	0.44099	5.52006	0.243097
Specific Gravity		1.13866	0.697955	0.679562	0.998355	0.69544
API Gravity				74.4658	9.92683	70.5732
Net Ideal Gas Heating Value	Btu/ft^3	1725.72	1108.92	4659.63	0	5210.64
Net Liquid Heating Value	Btu/lb	19718.5	20761.4	19138	-1059.76	19077.4
Std Liquid Volumetric Flow	sgpm	0.00180901	661.073	13.1484 *	21.8277 *	7.89947

Remarks

ProMax 4.0.16071.0
Copyright © 2002-2016 BRE Group, Ltd.
Licensed to Trinity Consultants, Inc. and Affiliates

Process Streams Report
All Streams
Tabulated by Total Phase

Client Name:	EQT Production	Job: V1.0
Location:	PEN-15 Wellpad	
Flowsheet:	PEN 15	

Connections

	Separator Oil	Water Out	1	2	8
From Block	High Pressure Separator	Water Tanks	Preheat	MIX-103	Choke
To Block	MIX-103	--	Choke	Low Pressure Separator	High Pressure Separator

Stream Composition

Mole Fraction	Separator Oil	Water Out	1	2	8
Nitrogen	0.000257738	7.78331E-09	0.00412542	2.03679E-05	0.00412542
Methane	0.127229	9.86491E-06	0.706822	0.00976484	0.706822
CO2	0.000531362	1.20881E-06	0.00126665	5.46258E-05	0.00126665
Ethane	0.107904	1.01333E-05	0.128637	0.00796231	0.128637
Propane	0.0876327	3.99516E-06	0.0348546	0.00639511	0.0348546
Isobutane	0.0251284	4.209E-07	0.00467459	0.0018303	0.00467459
n-Butane	0.0682777	2.34853E-06	0.00936843	0.00497342	0.00936843
Isopentane	0.0338813	3.55428E-07	0.00227299	0.00246649	0.00227299
n-Pentane	0.0421059	1.61206E-07	0.0023274	0.00306484	0.0023274
n-Hexane	0.097172	1.09625E-07	0.00230726	0.00707265	0.00230726
Methylcyclopentane	0	0	0	0	0
Benzene	0.000558764	6.87636E-07	1.31601E-05	4.10569E-05	1.31601E-05
Cyclohexane	0.00502012	1.51418E-07	0.000106936	0.000365459	0.000106936
n-Heptane	0.0972545	2.16125E-08	0.00135486	0.00707856	0.00135486
n-Octane	0.122832	2.13163E-09	0.00122799	0.00894014	0.00122799
n-Nonane	0.0553505	1.91205E-10	0.000471006	0.00402861	0.000471006
n-Decane	0.0891339	1.46585E-11	0.000712695	0.00648749	0.000712695
n-Undecane	0	0	0	0	0
Dodecane	0	0	0	0	0
Water	0.000559358	0.999967	0.0986412	0.926601	0.0986412
Triethylene Glycol	0	0	0	0	0
Oxygen	0	0	0	0	0
Argon	0	0	0	0	0
Carbon Monoxide	0	0	0	0	0
Cyclopentane	0	0	0	0	0
Isohexane	0.0211183	4.69734E-08	0.000622781	0.00153712	0.000622781
3-Methylpentane	0	0	0	0	0
Neohexane	0	0	0	0	0
2,3-Dimethylbutane	0	0	0	0	0
Methylcyclohexane	0	0	0	0	0
Isooctane	0	0	0	0	0
Decane, 2-Methyl-	0	0	0	0	0
Toluene	0.00547233	2.26188E-06	7.3208E-05	0.000399247	7.3208E-05
m-Xylene	0.0116401	1.14822E-06	0.000111506	0.000847579	0.000111506
Ethylbenzene	0.000940158	1.07546E-07	9.14115E-06	6.84708E-05	9.14115E-06

Mass Flow	Separator Oil lb/h	Water Out lb/h	1 lb/h	2 lb/h	8 lb/h
Nitrogen	0.339474	0.000130126	710.093	0.368587	710.093
Methane	95.9665	0.0944488	69672.6	101.196	69672.6
CO2	1.09951	0.0317495	342.52	1.553	342.52
Ethane	152.552	0.181845	23766.5	154.663	23766.5
Propane	181.687	0.105138	9443.58	182.168	9443.58
Isobutane	68.6704	0.0146	1669.43	68.7217	1669.43
n-Butane	186.588	0.0814648	3345.72	186.735	3345.72
Isopentane	114.935	0.0153043	1007.65	114.957	1007.65
n-Pentane	142.835	0.00694134	1031.77	142.845	1031.77
n-Hexane	393.719	0.00563801	1221.69	393.726	1221.69
Methylcyclopentane	0	0	0	0	0
Benzene	2.05214	0.0320559	6.31623	2.07172	6.31623
Cyclohexane	19.8645	0.00760525	55.2977	19.8687	55.2977
n-Heptane	458.192	0.00129245	834.165	458.194	834.165

Copyright © 2002-2016 BRE Group, Ltd.
Licensed to Trinity Consultants, Inc. and Affiliates

Process Streams Report
All Streams
Tabulated by Total Phase

Client Name:	EQT Production
Location:	PEN-15 Wellpad
Flowsheet:	PEN 15

Job: V1.0

Mass Flow	Separator Oil lb/h	Water Out lb/h	1 lb/h	2 lb/h	8 lb/h
n-Octane	659.701	0.000145318	861.886	659.701	861.886
n-Nonane	333.778	1.46354E-05	371.178	333.778	371.178
n-Decane	596.285	1.24471E-06	623.066	596.285	623.066
n-Undecane	0	0	0	0	0
Dodecane	0	0	0	0	0
Water	0.473798	10751.2	10918.9	10783.6	10918.9
Triethylene Glycol	0	0	0	0	0
Oxygen	0	0	0	0	0
Argon	0	0	0	0	0
Carbon Monoxide	0	0	0	0	0
Cyclopentane	0	0	0	0	0
Isohexane	85.5667	0.00241583	329.761	85.5694	329.761
3-Methylpentane	0	0	0	0	0
Neohexane	0	0	0	0	0
2,3-Dimethylbutane	0	0	0	0	0
Methylcyclohexane	0	0	0	0	0
Isooctane	0	0	0	0	0
Decane, 2-Methyl-	0	0	0	0	0
Toluene	23.7069	0.124378	41.4458	23.7635	41.4458
m-Xylene	58.1034	0.0727507	72.7381	58.1286	72.7381
Ethylbenzene	4.69293	0.00681407	5.96298	4.69586	5.96298

Volumetric Flow	Separator Oil gpm	Water Out gpm	1 ft^3/h	2 gpm	8 ft^3/h
Nitrogen	0.00139948	3.47527E-07	257.483	0.0014782	258.212
Methane	0.682582	0.000461586	38943.7	0.708419	39068.7
CO2	0.0018513	4.96608E-05	61.7297	0.00256763	61.953
Ethane	0.696895	0.000607833	5259.17	0.704012	5281.49
Propane	0.707476	0.000300692	1036.24	0.708861	1042.07
Isobutane	0.246163	3.81833E-05	100.228	0.246298	100.967
n-Butane	0.647818	0.000210381	171.092	0.648202	172.543
Isopentane	0.371411	3.67973E-05	24.1863	0.371466	24.5047
n-Pentane	0.457796	1.67221E-05	21.4291	0.457821	21.7435
n-Hexane	1.19025	1.29099E-05	8.90643	1.19026	9.15423
Methylcyclopentane	0	0	0	0	0
Benzene	0.00454144	5.97781E-05	0.0825367	0.00457815	0.0839003
Cyclohexane	0.0501701	1.53638E-05	0.519639	0.0501786	0.530437
n-Heptane	1.33169	2.86319E-06	5.55458	1.3317	5.66971
n-Octane	1.84498	3.11777E-07	10.4095	1.84498	10.4813
n-Nonane	0.906471	3.0657E-08	6.08397	0.906471	6.1006
n-Decane	1.58795	2.56602E-09	11.5375	1.58795	11.5527
n-Undecane	0	0	0	0	0
Dodecane	0	0	0	0	0
Water	-0.000255538	21.5218	218.114	21.6291	218.231
Triethylene Glycol	0	0	0	0	0
Oxygen	0	0	0	0	0
Argon	0	0	0	0	0
Carbon Monoxide	0	0	0	0	0
Cyclopentane	0	0	0	0	0
Isohexane	0.261605	5.53966E-06	2.96589	0.261611	3.03786
3-Methylpentane	0	0	0	0	0
Neohexane	0	0	0	0	0
2,3-Dimethylbutane	0	0	0	0	0
Methylcyclohexane	0	0	0	0	0
Isooctane	0	0	0	0	0
Decane, 2-Methyl-	0	0	0	0	0
Toluene	0.0526573	0.0002296	0.299858	0.0527624	0.305255
m-Xylene	0.128927	0.000133209	0.784312	0.128974	0.789344
Ethylbenzene	0.010378	1.24105E-05	0.0630384	0.0103834	0.0634654

Copyright © 2002-2016 BRE Group, Ltd.
Licensed to Trinity Consultants, Inc. and Affiliates

Process Streams Report
All Streams
Tabulated by Total Phase

Client Name:	EQT Production
Location:	PEN-15 Wellpad
Flowsheet:	PEN 15
Job:	V1.0

Stream Properties

Property	Units	Separator Oil	Water Out	1	2	8
Temperature	°F	85	70	79.4428	85	79.3315
Pressure	psig	475	0.25	593	475	591
Mole Fraction Vapor		0	0	0.891853	0	0.891852
Mole Fraction Light Liquid		1	1	0.010271	0.0727836	0.010271
Mole Fraction Heavy Liquid		0	0	0.0978762	0.927216	0.0978767
Molecular Weight	lb/lbmol	76.1586	18.016	20.5605	22.2487	20.5605
Mass Density	lb/ft^3	39.922	62.2799	2.73799	54.5513	2.72867
Mass Flow	lb/h	3580.81	10752	126332	14372.5	126332
Vapor Volumetric Flow	ft^3/h	89.695	172.64	46140.6	263.469	46298.1
Liquid Volumetric Flow	gpm	11.1828	21.524	5752.59	32.848	5772.23
Std Vapor Volumetric Flow	MMSCFD	0.42822	5.43547	55.9611	5.88346	55.9611
Specific Gravity		0.640094	0.998572		0.874653	
API Gravity		84.7127	10.0029		28.9157	
Net Ideal Gas Heating Value	Btu/ft^3	3893.35	0.0646794	1027.52	284.074	1027.52
Net Liquid Heating Value	Btu/lb	19245.1	-1058.33	18818.4	4011.61	18818.4
Std Liquid Volumetric Flow	sgpm	11.3623	21.4956	696.049	32.9693	696.049

Remarks

ProMax 4.0.16071.0
Copyright © 2002-2016 BRE Group, Ltd.
Licensed to Trinity Consultants, Inc. and Affiliates

Energy Stream Report

Client Name:	EQT Production
Location:	PEN-15 Wellpad
Flowsheet:	PEN 15

Job: V1.0

Energy Streams

Energy Stream	Energy Rate	Power	From Block	To Block
Q-1	-889308 Btu/h	-349.511 hp	--	Water Tanks
Q-3	103442 Btu/h	40.6541 hp	--	CE-5
Q-4	457544 Btu/h	179.821 hp	--	Preheat
Q-7	1000000 * Btu/h	393.015 * hp	--	Low Pressure Separator
Q-9	-125654 Btu/h	-49.384 hp	--	Oil Tanks
Q-13	1.07734E+06 Btu/h	423.41 hp	--	High Pressure Separator

Remarks

ProMax 4.0.16071.0
Copyright © 2002-2016 BRE Group, Ltd.
Licensed to Trinity Consultants, Inc. and Affiliates

User Value Sets Report

Client Name:	EQT Production	Job: V1.0
Location:	PEN-15 Wellpad	

Tank Losses.53

User Value [ShellLength]

* Parameter	20	ft	Upper Bound	ft
* Lower Bound	0	ft	* Enforce Bounds	False

User Value [ShellDiam]

* Parameter	12	ft	Upper Bound	ft
* Lower Bound	0	ft	* Enforce Bounds	False

User Value [BreatherVP]

* Parameter	0.3	psig	Upper Bound	psig
Lower Bound		psig	* Enforce Bounds	False

User Value [BreatherVacP]

* Parameter	-0.7	psig	Upper Bound	psig
Lower Bound		psig	* Enforce Bounds	False

User Value [DomeRadius]

Parameter		ft	Upper Bound	ft
Lower Bound		ft	* Enforce Bounds	False

User Value [OpPress]

* Parameter	0	psig	Upper Bound	psig
Lower Bound		psig	* Enforce Bounds	False

User Value [AvgPercentLiq]

* Parameter	50	%	Upper Bound	%
Lower Bound		%	* Enforce Bounds	False

User Value [MaxPercentLiq]

* Parameter	90	%	Upper Bound	%
Lower Bound		%	* Enforce Bounds	False

User Value [AnnNetTP]

* Parameter	266.821	bbl/day	Upper Bound	bbl/day
* Lower Bound	0	bbl/day	* Enforce Bounds	False

User Value [OREff]

* Parameter	0	%	Upper Bound	%
Lower Bound		%	* Enforce Bounds	False

User Value [AtmPressure]

* Parameter	14.2535	psia	Upper Bound	psia
Lower Bound		psia	* Enforce Bounds	False

User Value [MaxLiqSurfaceT]

* Parameter	61.4758	°F	Upper Bound	°F
Lower Bound		°F	* Enforce Bounds	False

User Value [TotalLosses]

* Parameter	12.7279	ton/yr	Upper Bound	ton/yr
Lower Bound		ton/yr	* Enforce Bounds	False

User Value [WorkingLosses]

* Parameter	2.00129	ton/yr	Upper Bound	ton/yr
Lower Bound		ton/yr	* Enforce Bounds	False

Copyright © 2002-2016 BRE Group, Ltd.
Licensed to Trinity Consultants, Inc. and Affiliates

User Value Sets Report

Client Name:	EQT Production	Job: V1.0
Location:	PEN-15 Wellpad	

User Value [StandingLosses]

* Parameter	0.120019	ton/yr	Upper Bound	ton/yr
Lower Bound		ton/yr	* Enforce Bounds	False

User Value [RimSealLosses]

* Parameter	0	ton/yr	Upper Bound	ton/yr
Lower Bound		ton/yr	* Enforce Bounds	False

User Value [WithdrawalLoss]

* Parameter	0	ton/yr	Upper Bound	ton/yr
Lower Bound		ton/yr	* Enforce Bounds	False

User Value [LoadingLosses]

* Parameter	44.2257	ton/yr	Upper Bound	ton/yr
Lower Bound		ton/yr	* Enforce Bounds	False

User Value [DeckFittingLosses]

* Parameter	0	ton/yr	Upper Bound	ton/yr
Lower Bound		ton/yr	* Enforce Bounds	False

User Value [DeckSeamLosses]

* Parameter	0	ton/yr	Upper Bound	ton/yr
Lower Bound		ton/yr	* Enforce Bounds	False

User Value [FlashingLosses]

* Parameter	30.2232	ton/yr	Upper Bound	ton/yr
Lower Bound		ton/yr	* Enforce Bounds	False

User Value [GasMoleWeight]

* Parameter	0.0551334	kg/mol	Upper Bound	kg/mol
Lower Bound		kg/mol	* Enforce Bounds	False

Remarks
This User Value Set was programmatically generated. GUID={5524AB8C-40B1-4354-9DD7-EED65770BF87}

Tank Losses.331

User Value [ShellLength]

* Parameter	20	ft	Upper Bound	ft
* Lower Bound	0	ft	* Enforce Bounds	False

User Value [ShellDiam]

* Parameter	12	ft	Upper Bound	ft
* Lower Bound	0	ft	* Enforce Bounds	False

User Value [BreatherVP]

* Parameter	0.3	psig	Upper Bound	psig
Lower Bound		psig	* Enforce Bounds	False

User Value [BreatherVacP]

* Parameter	-0.7	psig	Upper Bound	psig
Lower Bound		psig	* Enforce Bounds	False

ProMax 4.0.16071.0
Copyright © 2002-2016 BRE Group, Ltd.
Licensed to Trinity Consultants, Inc. and Affiliates

User Value Sets Report

Client Name:	EQT Production	Job: V1.0
Location:	PEN-15 Wellpad	

User Value [DomeRadius]

	Parameter	ft		Upper Bound	ft
	Lower Bound	ft	*	Enforce Bounds	False

User Value [OpPress]

*	Parameter	0 psig		Upper Bound	psig
	Lower Bound	psig	*	Enforce Bounds	False

User Value [AvgPercentLiq]

*	Parameter	50 %		Upper Bound	%
	Lower Bound	%	*	Enforce Bounds	False

User Value [MaxPercentLiq]

*	Parameter	90 %		Upper Bound	%
	Lower Bound	%	*	Enforce Bounds	False

User Value [AnnNetTP]

*	Parameter	5.27769 bbl/day		Upper Bound	bbl/day
*	Lower Bound	0 bbl/day	*	Enforce Bounds	False

User Value [OREff]

*	Parameter	0 %		Upper Bound	%
	Lower Bound	%	*	Enforce Bounds	False

User Value [AtmPressure]

*	Parameter	14.2535 psia		Upper Bound	psia
	Lower Bound	psia	*	Enforce Bounds	False

User Value [MaxLiqSurfaceT]

*	Parameter	75.9425 °F		Upper Bound	°F
	Lower Bound	°F	*	Enforce Bounds	False

User Value [TotalLosses]

*	Parameter	2.05774 ton/yr		Upper Bound	ton/yr
	Lower Bound	ton/yr	*	Enforce Bounds	False

User Value [WorkingLosses]

*	Parameter	0.342957 ton/yr		Upper Bound	ton/yr
	Lower Bound	ton/yr	*	Enforce Bounds	False

User Value [StandingLosses]

*	Parameter	0 ton/yr		Upper Bound	ton/yr
	Lower Bound	ton/yr	*	Enforce Bounds	False

User Value [RimSealLosses]

*	Parameter	0 ton/yr		Upper Bound	ton/yr
	Lower Bound	ton/yr	*	Enforce Bounds	False

User Value [WithdrawalLoss]

*	Parameter	0 ton/yr		Upper Bound	ton/yr
	Lower Bound	ton/yr	*	Enforce Bounds	False

User Value [LoadingLosses]

*	Parameter	4.90333 ton/yr		Upper Bound	ton/yr
	Lower Bound	ton/yr	*	Enforce Bounds	False

ProMax 4.0.16071.0
Copyright © 2002-2016 BRE Group, Ltd.
Licensed to Trinity Consultants, Inc. and Affiliates

User Value Sets Report

Client Name:	EQT Production	Job: V1.0
Location:	PEN-15 Wellpad	

User Value [DeckFittingLosses]

* Parameter	0	ton/yr	Upper Bound	ton/yr
Lower Bound		ton/yr	* Enforce Bounds	False

User Value [DeckSeamLosses]

* Parameter	0	ton/yr	Upper Bound	ton/yr
Lower Bound		ton/yr	* Enforce Bounds	False

User Value [FlashingLosses]

* Parameter	1.098	ton/yr	Upper Bound	ton/yr
Lower Bound		ton/yr	* Enforce Bounds	False

User Value [GasMoleWeight]

* Parameter	0.0466465	kg/mol	Upper Bound	kg/mol
Lower Bound		kg/mol	* Enforce Bounds	False

Remarks
This User Value Set was programmatically generated. GUID={23417019-6BCF-4B6A-8C2C-C51E3F9510A8}

ProMax 4.0.16071.0
Copyright © 2002-2016 BRE Group, Ltd.
Licensed to Trinity Consultants, Inc. and Affiliates

```
*******************************************************************************
******
*     Project Setup Information
    *
*******************************************************************************
******
Project File              : \\tsclient\Z\Client\EQT Corporation\West Virginia\WV
Production Wells\163901.0058 WV Wellpads 2016\PEN 15\2016-0718_EQT_PEN15_G70
Mod\Attach I - Emission Calcs\E&P Tank\2016-0718_PEN-15_Sand Separator Tank.ept
Flowsheet Selection       : Oil Tank with Separator
Calculation Method        : RVP Distillation
Control Efficiency        : 0.0%
Known Separator Stream    : Low Pressure Oil
Entering Air Composition  : No

Filed Name                : PEN-15 Wellpad
Well Name                 : Sand Separator Tank:
Date                      2016.07.18


*******************************************************************************
******
*     Data Input
    *
*******************************************************************************
******

Separator Pressure        : 595.00[psig]
Separator Temperature     : 60.00[F]
Ambient Pressure          : 14.70[psia]
Ambient Temperature       : 70.00[F]
C10+ SG                   : 0.7550
C10+ MW                   : 156.475

-- Low Pressure Oil
-------------------------------------------------------------------------
   No.    Component             mol %
   1      H2S                    0.0000
   2      O2                     0.0000
   3      CO2                    0.0180
   4      N2                     0.0000
   5      C1                     3.3360
   6      C2                     0.9730
   7      C3                     3.3090
   8      i-C4                   2.1840
   9      n-C4                   8.2860
   10     i-C5                   5.9510
   11     n-C5                   8.3650
   12     C6                     7.9030
   13     C7                    17.1930
   14     C8                     3.4250
   15     C9                     5.9770
   16     C10+                   9.0440
   17     Benzene                0.1670
   18     Toluene                0.9290
   19     E-Benzene              0.1160
   20     Xylenes                1.4150
   21     n-C6                   7.8940
   22     224Trimethylp         12.1580

-- Sales Oil
-------------------------------------------------------------------------
```

Production Rate : 0.1[bbl/day]
Days of Annual Operation : 365 [days/year]
API Gravity : 59.11
Reid Vapor Pressure : 10.60[psia]

****
******
* Calculation Results
*
****
******

-- Emission Summary

Item	Uncontrolled [ton/yr]	Uncontrolled [lb/hr]	Controlled [ton/yr]	Controlled [lb/hr]
Total HAPs	0.010	0.002	0.010	0.002

Total HC	0.240	0.055	0.240	0.055
VOCs, C2+	0.212	0.048	0.212	0.048
VOCs, C3+	0.196	0.045	0.196	0.045

Uncontrolled Recovery Info.

Vapor	11.7400 x1E-3	[MSCFD]
HC Vapor	11.7200 x1E-3	[MSCFD]
GOR	117.40	[SCF/bbl]

-- Emission Composition

No	Component	Uncontrolled [ton/yr]	Uncontrolled [lb/hr]	Controlled [ton/yr]	Controlled [lb/hr]
1	H2S	0.000	0.000	0.000	0.000
2	O2	0.000	0.000	0.000	0.000
3	CO2	0.000	0.000	0.000	0.000
4	N2	0.000	0.000	0.000	0.000
5	C1	0.028	0.006	0.028	0.006
6	C2	0.015	0.003	0.015	0.003
7	C3	0.054	0.012	0.054	0.012
8	i-C4	0.020	0.005	0.020	0.005
9	n-C4	0.055	0.013	0.055	0.013
10	i-C5	0.019	0.004	0.019	0.004
11	n-C5	0.020	0.005	0.020	0.005
12	C6	0.008	0.002	0.008	0.002
13	C7	0.007	0.002	0.007	0.002
14	C8	0.000	0.000	0.000	0.000
15	C9	0.000	0.000	0.000	0.000
16	C10+	0.000	0.000	0.000	0.000
17	Benzene	0.000	0.000	0.000	0.000
18	Toluene	0.000	0.000	0.000	0.000
19	E-Benzene	0.000	0.000	0.000	0.000
20	Xylenes	0.000	0.000	0.000	0.000
21	n-C6	0.006	0.001	0.006	0.001
22	224Trimethylp	0.004	0.001	0.004	0.001
	Total	0.236	0.054	0.236	0.054

-- Stream Data

No.	Component	MW	LP Oil	Flash Oil	Sale Oil	Flash Gas	W&S Gas	Total Emissions
			mol %	mol %	mol %	mol %	mol %	

mol %							
1	H2S	34.80	0.0000	0.0000	0.0000	0.0000	0.0000
0.0000							
2	O2	32.00	0.0000	0.0000	0.0000	0.0000	0.0000
0.0000							
3	CO2	44.01	0.0180	0.0036	0.0000	0.1957	0.1037
0.1683							
4	N2	28.01	0.0000	0.0000	0.0000	0.0000	0.0000
0.0000							
5	C1	16.04	3.3360	0.2539	0.0000	41.3358	7.2693
31.1964							
6	C2	30.07	0.9730	0.3338	0.0053	8.9045	9.4110
9.0553							
7	C3	44.10	3.3090	2.2911	1.1089	16.2573	34.9590
21.8236							
8	i-C4	58.12	2.1840	1.9617	1.7311	5.2757	8.3348
6.1862							
9	n-C4	58.12	8.2860	7.8859	7.3945	14.6371	21.4660
16.6696							
10	i-C5	72.15	5.9510	6.1746	6.1864	4.3130	5.8490
4.7702							
11	n-C5	72.15	8.3650	8.8091	8.9071	4.4880	6.1016
4.9683							
12	C6	86.16	7.9030	8.5458	8.7784	1.5314	2.1176
1.7059							
13	C7	100.20	17.1930	18.7768	19.3999	1.0818	1.5612
1.2245							
14	C8	114.23	3.4250	3.7529	3.8850	0.0658	0.1001
0.0760							
15	C9	128.28	5.9770	6.5554	6.7903	0.0384	0.0651
0.0464							
16	C10+	156.48	9.0440	9.9233	10.2818	0.0096	0.0171
0.0118							
17	Benzene	78.11	0.1670	0.1813	0.1867	0.0236	0.0331
0.0265							
18	Toluene	92.13	0.9290	1.0165	1.0513	0.0358	0.0528
0.0408							
19	E-Benzene	106.17	0.1160	0.1272	0.1317	0.0014	0.0022
0.0017							
20	Xylenes	106.17	1.4150	1.5515	1.6067	0.0150	0.0235
0.0175							
21	n-C6	86.18	7.8940	8.5644	8.8143	1.1857	1.6603
1.3269							
22	224Trimethylp	114.24	12.1580	13.2913	13.7407	0.6043	0.8725
0.6842							
	MW		91.84	96.21	97.83	38.74	51.44
42.52							
	Stream Mole Ratio		1.0000	0.9239	0.8916	0.0761	0.0323
0.1084							
	Heating Value	[BTU/SCF]				2217.35	2898.76
2420.16							
	Gas Gravity	[Gas/Air]				1.34	1.78
1.47							
	Bubble Pt. @ 100F	[psia]	116.98	22.57	11.29		
	RVP @ 100F	[psia]	36.70	15.08	10.57		

	Spec. Gravity @ 100F		0.661	0.668	0.671		

CERTIFICATE OF ANALYSIS

Number : 2013040013-002A

LAFAYETTE AREA LABORATORY
4790 N.E. EVANGELINE THRUWAY
CARENCRO, LA 70520
PHONE (337) 896-3055
FAX (337) 896-3077

Gas Analytical Services
Chuck Honaker
PO Box 1028

Bridgeport, WV 26330

Field:	EQT Production	**Report Date:**	04/11/13
Station:	513040	**Sample Of:**	Condensate
Station No.:		**Sample Date:**	03/25/2013 16:00
Sample Point:	Pen 15 Pad	**Sample Conditions:**	595 psi @ N.G. °F
Cylinder # :	GAS	**PO / Ref. No.:**	

Comments:

ANALYTICAL DATA

Components	Mol %	Wt%	LV%	Method	Lab Tech.	Date Analyzed
				GPA-2186	CC	04/11/13
Nitrogen	NIL	NIL	NIL	(MC10)		
Methane	3.336	0.582	1.328			
Carbon Dioxide	0.018	0.009	0.008			
Ethane	0.973	0.319	0.613			
Propane	3.309	1.587	2.142			
iso Butane	2.184	1.380	1.678			
n-Butane	8.286	5.239	6.138			
iso Pentane	5.951	4.671	5.114			
n-Pentane	8.365	6.565	7.124			
i-Hexanes	7.903	7.403	7.706			
n-Hexane	7.894	7.456	7.787			
Benzene	0.167	0.144	0.115			
Cyclohexane	1.357	1.251	1.106			
i-Heptanes	10.777	11.701	11.611			
n-Heptane	6.416	7.055	7.115			
Toluene	0.929	0.936	0.746			
i-Octanes	12.158	14.493	13.655			
n-Octane	3.425	4.298	4.221			
*e-Benzene	0.116	0.131	0.106			
*m,o,&p-Xylene	1.415	1.648	1.312			
i-Nonanes	4.293	5.856	5.410			
n-Nonane	1.684	2.368	2.276			
i-Decanes	3.287	4.936	4.476			
n-Decane Plus	0.805	1.262	1.194			
	4.952	8.710	7.019			
Totals	100.000	100.000	100.000			

Calculated Values	TOTAL	C10+
Molecular Weight	91.924	156.475
BTU / Lb.	20691	20457
BTU / Gal.	118060	128683
Cu. Ft. / Gal. At 14.73 Psia, 60°F	23.502	8113.6
Lbs. / Gal. (Absolute Density)	5.7061	6.2945
Lbs. / Gal. (Weight in Air)	5.6998	6.2875
Specific Gravity at 60°F (Water = 1)	0.6844	0.7550
API Gravity at 60°F	75.244	55.921

Brian Gaspard
Data Reviewer

ATTACHMENT O

Monitoring/Recordkeeping/Reporting/Testing Plans

ATTACHMENT O: MONITORING, RECORDING, REPORTING, AND TESTING PLANS

There is no change in monitoring, recording, reporting and testing requirements for all the existing sources at PEN-15 wellpad.

The new VRU engine is subject to 40 CFR 60 Subpart JJJJ §60.4243(a)(2)(ii) which requires the owner/operator to keep a maintenance plan and records of conducted maintenance and, to the extent practicable, maintain and operate the engine in a manner consistent with good air pollution control practice for minimizing emissions. No stack testing is required for this engine since it is a certified engine.

ATTACHMENT P

Class I Legal Notice

AIR QUALITY PERMIT NOTICE
Notice of Application

Notice is given that EQT Production Company has applied to the West Virginia Department of Environmental Protection, Division of Air Quality, for a modification permit (R-13) for an existing natural gas production wellpad operation (PEN 15), currently permitted under R13-3339 located off Pullman Drive (Route 74), near Pennsboro, in Ritchie County, West Virginia. The latitude and longitude coordinates are: 39.26205°, -80.95179°.

The applicant estimates the potential to discharge the following Regulated Air Pollutants will be:

Pollutant	Emissions in tpy (tons per year)
NOx	43.44
CO	36.11
VOC	38.81
SO_2	0.21
PM	2.90
Total HAPs	3.69
Benzene	0.04
Toluene	0.06
Ethylbenzene	0.03
Carbon Dioxide Equivalents (CO_2e)	42,819

The application seeks to add one (1) additional vapor recovery unit (VRU) at the wellpad. Written comments will be received by the West Virginia Department of Environmental Protection, Division of Air Quality, 601 57th Street, SE, Charleston, WV 25304, for at least 30 calendar days from the date of publication of this notice.

Any questions regarding this permit application should be directed to the DAQ at (304) 926-0499, extension 1250, during normal business hours.
Dated this the **(Day)** day of **(Month)**, 2016.

By: EQT Production Company
Mike Gavin, Vice President
625 Liberty Ave Suite 1700
Pittsburgh, PA 15222