CONESTOGA-ROVERS
& ASSOCIATES

6320 Rothway, Suite 100, Houston, Texas 77040
Telephone: (713) 734-3090 Fax: (713) 734-3391
www.CRAworld.com

April 29, 2015 Reference No. 082715

Mr. Jay Fedczak
Assistant Director for Permitting
Division of Air Quality
WV Department of Environmental Protection
601 57th Street, SE
Charleston, West Virginia 25304

Dear Mr. Jay Fedczak:

Re: General Permit G70A Class I Administrative Update Application
Mulvay Well Pad
Antero Resources Corporation

Conestoga-Rovers & Associates (CRA) would like to submit this General Permit Class I Administrative Update application that we prepared on behalf of Antero Resources Corporation for an oil and gas facility identified as Mulvay Well Pad.

The Class I Administrative Update is requested due to the proposed change in the manufacturer of the enclosed combustor from Abutec to Cimarron. This change will not result in any changes to the nature and quantity of emissions.

Enclosed are the following documents:

- Original copy of the G70-A General Permit Class I Administrative Update Application
- One CD copy of the G70-A General Permit Class I Administrative Update Application

Please let us know if you have any questions or require additional information.

Sincerely,

CONESTOGA-ROVERS & ASSOCIATES

Manuel Bautista

Encl.

cc: Barry Schatz, Antero Resources Corporation

Equal
Employment Opportunity
Employer

CONESTOGA-ROVERS & ASSOCIATES

www.CRAworld.com

General Permit Application G70-A
Class I Administrative Update

Change in enclosed combustor from Abutec to Cimarron brand

Mulvay Well Pad

Prepared for: Antero Resources Corporation

Conestoga-Rovers & Associates

6320 Rothway, Suite 100
Houston, Texas 77040

April 2015 • 082715 • Report No. 178

Partners in Sustainability

Table of Contents

G70-A General Permit Class I Administrative Update

Attachment G	G70-A Section Applicability Form
Attachment H	Air Pollution Control Device Data Sheet
Attachment O	Emissions Summary Sheet

* Note: Except for Attachments G and O, other attachments with no changes from previous permit application or not applicable were not included in this submittal. Attachments G and O were included only for easy reference.

The Attachment letter identifiers consistent with the G70-A application guidance and instructions were maintained for easier identification/reference.

WEST VIRGINIA
DEPARTMENT OF ENVIRONMENTAL PROTECTION
DIVISION OF AIR QUALITY
601 57th Street, SE
Charleston, WV 25304
Phone: (304) 926-0475 • *www.dep.wv.gov/daq*

APPLICATION FOR GENERAL PERMIT REGISTRATION

CONSTRUCT, MODIFY, RELOCATE OR ADMINISTRATIVELY UPDATE

A STATIONARY SOURCE OF AIR POLLUTANTS

☐ CONSTRUCTION ☐ MODIFICATION ☐ RELOCATION ☒ CLASS I ADMINISTRATIVE UPDATE
☐ CLASS II ADMINISTRATIVE UPDATE

CHECK WHICH TYPE OF GENERAL PERMIT REGISTRATION YOU ARE APPLYING FOR:

- ☐ **G10-D –** Coal Preparation and Handling
- ☐ **G20-B –** Hot Mix Asphalt
- ☐ **G30-D –** Natural Gas Compressor Stations
- ☐ **G33-A –** Spark Ignition Internal Combustion Engines
- ☐ **G35-A –** Natural Gas Compressor Stations (Flare/Glycol Dehydration Unit)
- ☐ **G40-C –** Nonmetallic Minerals Processing
- ☐ **G50-B –** Concrete Batch
- ☐ **G60-C –** Class II Emergency Generator
- ☐ **G65-C –** Class I Emergency Generator
- ☒ **G70-A –** Class II Oil and Natural Gas Production Facility

SECTION I. GENERAL INFORMATION

1. Name of applicant (as registered with the WV Secretary of State's Office):
Antero Resources Corporation

2. Federal Employer ID No. **(FEIN):**
80-0162034

3. Applicant's mailing address:
1615 Wynkoop Street
Denver, CO, 80202

4. Applicant's physical address:
0.3 mile southeast of the Short Run Road and
Burton Run Road Intersection in Ritchie County, WV

5. If applicant is a subsidiary corporation, please provide the name of parent corporation:

6. **WV BUSINESS REGISTRATION.** Is the applicant a resident of the State of West Virginia? ☐ **YES** ☒ **NO**

– IF **YES,** provide a copy of the Certificate of **Incorporation/ Organization / Limited Partnership** (one page) including any name change amendments or other Business Registration Certificate as **Attachment A**.

– IF **NO,** provide a copy of the **Certificate of Authority / Authority of LLC / Registration** (one page) including any name change amendments or other Business Certificate as **Attachment A**.

SECTION II. FACILITY INFORMATION

7. Type of plant or facility (stationary source) to be constructed, modified, relocated or administratively updated (e.g., coal preparation plant, primary crusher, etc.):
Natural Gas and Oil Production facility

8a. Standard Industrial Classification AND 8b. North American Industry
Classification (SIC) code: 1311 System (NAICS) code: 211111

9. DAQ Plant ID No. (for existing facilities only):
0 8 5 - 0 0 0 4 0

10. List all current 45CSR13 and other General Permit numbers associated with this process (for existing facilities only):
G70-A111

A: PRIMARY OPERATING SITE INFORMATION

11A. Facility name of primary operating site:	12A. Address of primary operating site:
Mulvay Well Pad	Mailing: N/A Physical: From the intersection of Short Run Road and Burton Run Road, head for 0.3 mi southeast on Short Run Road. The entrance to the facility will be towards left.

13A. Does the applicant own, lease, have an option to buy, or otherwise have control of the proposed site? ☒ **YES** ☐ **NO**

- IF **YES**, please explain: Antero is leasing the mineral rights for this site
- IF **NO**, YOU ARE NOT ELIGIBLE FOR A PERMIT FOR THIS SOURCE.

14A.
- For **Modifications or Administrative Updates** at an existing facility, please provide directions to the present location of the facility from the nearest state road;
- For Construction or Relocation permits, please provide directions to the proposed new site location from the nearest state road. Include a **MAP** as **Attachment F**.

From the intersection of Short Run Road and Burton Run Road, head for 0.3 mi southeast on Short Run Road. The entrance to the facility will be towards left.

15A. Nearest city or town:	16A. County:	17A. UTM Coordinates:
Pennsboro	Ritchie	Northing (KM): 4,352.5814 Easting (KM): 508.6967 Zone: 17N

18A. Briefly describe the proposed new operation or change (s) to the facility:	19A. Latitude & Longitude Coordinates (NAD83, Decimal Degrees to 5 digits):
Change in manufacturer of enclosed combustor from Abutec to Cimarron	Latitude: 39.322597 Longitude: -80.899107

B: 1ST ALTERNATE OPERATING SITE INFORMATION (only available for G20, G40, & G50 General Permits)

11B. Name of 1st alternate operating site:	12B. Address of 1st alternate operating site:
	Mailing: Physical:

13B. Does the applicant own, lease, have an option to buy, or otherwise have control of the proposed site? ☐ **YES** ☐ **NO**

- IF **YES**, please explain:
- IF **NO**, YOU ARE NOT ELIGIBLE FOR A PERMIT FOR THIS SOURCE.

14B.
- For **Modifications or Administrative Updates** at an existing facility, please provide directions to the present location of the facility from the nearest state road;
- For Construction or Relocation permits, please provide directions to the proposed new site location from the nearest state road. Include a **MAP** as **Attachment F**.

15B. Nearest city or town:	16B. County:	17B. UTM Coordinates: Northing (KM): _____ Easting (KM): _____ Zone: _____
18B. Briefly describe the proposed new operation or change (s) to the facility:		19B. Latitude & Longitude Coordinates (NAD83, Decimal Degrees to 5 digits): Latitude: _____ Longitude: _____

C: 2ND ALTERNATE OPERATING SITE INFORMATION (only available for G20, G40, & G50 General Permits):

11C. Name of 2nd alternate operating site: _____ _____	12C. Address of 2nd alternate operating site: Mailing:_____ Physical:_____ _____

13C. Does the applicant own, lease, have an option to buy, or otherwise have control of the proposed site? ☐ **YES** ☐ **NO**

- IF **YES**, please explain: _____

  _____

- IF **NO**, YOU ARE NOT ELIGIBLE FOR A PERMIT FOR THIS SOURCE.

14C.
- For **Modifications or Administrative Updates** at an existing facility, please provide directions to the present location of the facility from the nearest state road;
- For Construction or Relocation permits, please provide directions to the proposed new site location from the nearest state road. Include a **MAP** as **Attachment F**.

_____

_____

_____

15C. Nearest city or town:	16C. County:	17C. UTM Coordinates: Northing (KM): _____ Easting (KM): _____ Zone: _____
18C. Briefly describe the proposed new operation or change (s) to the facility:		19C. Latitude & Longitude Coordinates (NAD83, Decimal Degrees to 5 digits): Latitude: _____ Longitude: _____

20. Provide the date of anticipated installation or change: 05/01/2015 ☐ If this is an **After-The-Fact** permit application, provide the date upon which the proposed change did happen: : _____/_____/_____	21. Date of anticipated Start-up if registration is granted: 06/01/2015

22. Provide maximum projected **Operating Schedule** of activity/activities outlined in this application if other than 8760 hours/year. (Note: anything other than 24/7/52 may result in a restriction to the facility's operation).

Hours per day_____ Days per week _____ Weeks per year _____ Percentage of operation _____

SECTION III. ATTACHMENTS AND SUPPORTING DOCUMENTS

23. Include a check payable to WVDEP – Division of Air Quality with the appropriate **application fee** (per 45CSR22 and 45CSR13).

24. Include a **Table of Contents** as the first page of your application package.

All of the required forms and additional information can be found under the Permitting Section (General Permits) of DAQ's website, or requested by phone.

25. Please check all attachments included with this permit application. Please refer to the appropriate reference document for an explanation of the attachments listed below.

- ☐ ATTACHMENT A : CURRENT BUSINESS CERTIFICATE
- ☐ ATTACHMENT B: PROCESS DESCRIPTION
- ☐ ATTACHMENT C: DESCRIPTION OF FUGITIVE EMISSIONS
- ☐ ATTACHMENT D: PROCESS FLOW DIAGRAM
- ☐ ATTACHMENT E: PLOT PLAN
- ☐ ATTACHMENT F: AREA MAP
- ☒ ATTACHMENT G: EQUIPMENT DATA SHEETS AND REGISTRATION SECTION APPLICABILITY FORM
- ☒ ATTACHMENT H: AIR POLLUTION CONTROL DEVICE SHEETS
- ☐ ATTACHMENT I: EMISSIONS CALCULATIONS
- ☐ ATTACHMENT J: CLASS I LEGAL ADVERTISEMENT
- ☐ ATTACHMENT K: ELECTRONIC SUBMITTAL
- ☐ ATTACHMENT L: GENERAL PERMIT REGISTRATION APPLICATION FEE
- ☐ ATTACHMENT M: SITING CRITERIA WAIVER
- ☐ ATTACHMENT N: MATERIAL SAFETY DATA SHEETS (MSDS)
- ☒ ATTACHMENT O: EMISSIONS SUMMARY SHEETS
- ☐ OTHER SUPPORTING DOCUMENTATION NOT DESCRIBED ABOVE (Equipment Drawings, Aggregation Discussion, etc.)

Please mail an original and two copies of the complete General Permit Registration Application with the signature(s) to the DAQ Permitting Section, at the address shown on the front page of this application. Please DO NOT fax permit applications. For questions regarding applications or West Virginia Air Pollution Rules and Regulations, please refer to the website shown on the front page of the application or call the phone number also provided on the front page of the application.

SECTION IV. CERTIFICATION OF INFORMATION

This General Permit Registration Application shall be signed below by a Responsible Official. A Responsible Official is a President, Vice President, Secretary, Treasurer, General Partner, General Manager, a member of a Board of Directors, or Owner, depending on business structure. A business may certify an Authorized Representative who shall have authority to bind the Corporation, Partnership, Limited Liability Company, Association, Joint Venture or Sole Proprietorship. Required records of daily throughput, hours of operation and maintenance, general correspondence, Emission Inventory, Certified Emission Statement, compliance certifications and all required notifications must be signed by a Responsible Official or an Authorized Representative. If a business wishes to certify an Authorized Representative, the official agreement below shall be checked off and the appropriate names and signatures entered. Any administratively incomplete or improperly signed or unsigned Registration Application will be returned to the applicant.

FOR A CORPORATION (domestic or foreign)

☐ I certify that I am a President, Vice President, Secretary, Treasurer or in charge of a principal business function of the corporation

FOR A PARTNERSHIP

☐ I certify that I am a General Partner

FOR A LIMITED LIABILITY COMPANY

☐ I certify that I am a General Partner or General Manager

FOR AN ASSOCIATION

☐ I certify that I am the President or a member of the Board of Directors

FOR A JOINT VENTURE

☐ I certify that I am the President, General Partner or General Manager

FOR A SOLE PROPRIETORSHIP

☐ I certify that I am the Owner and Proprietor

☐ *I hereby certify that* (please print or type) _____

is an Authorized Representative and in that capacity shall represent the interest of the business (e.g., Corporation, Partnership, Limited Liability Company, Association Joint Venture or Sole Proprietorship) and may obligate and legally bind the business. If the business changes its Authorized Representative, a Responsible Official shall notify the Director of the Office of Air Quality immediately, and/or,

I hereby certify that all information contained in this General Permit Registration Application and any supporting documents appended hereto is, to the best of my knowledge, true, accurate and complete, and that all reasonable efforts have been made to provide the most comprehensive information possible

Signature _____
(please use blue ink) Responsible Official Date

Name & Title Barry Schatz, Senior Environmental & Regulatory Manager
(please print or type)

Signature Barry Schatz 4-29-15
(please use blue ink) Authorized Representative (if applicable) Date

Applicant's Name Antero Resources Corporation

Phone & Fax 303-357-7276 303-357-7315
Phone Fax

Email bschatz@anteroresources.com

Attachment R
AUTHORITY OF CORPORATION
OR OTHER BUSINESS ENTITY (DOMESTIC OR FOREIGN)

TO: The West Virginia Department of Environmental Protection, Division of Air Quality

DATE: January 23, 2015

ATTN.: Director

Corporation's / other business entity's Federal Employer I.D. Number 80-0162034

The undersigned hereby files with the West Virginia Department of Environmental Protection, Division of Air Quality, a permit application and hereby certifies that the said name is a trade name which is used in the conduct of an incorporated business or other business entity.

Further, the corporation or the business entity certifies as follows:

(1) Barry Schatz (is/are) the authorized representative(s) and in that capacity may represent the interest of the corporation or the business entity and may obligate and legally bind the corporation or the business entity.

(2) The corporation or the business entity is authorized to do business in the State of West Virginia.

(3) If the corporation or the business entity changes its authorized representative(s), the corporation or the business entity shall notify the Director of the West Virginia Department of Environmental Protection, Division of Air Quality, immediately upon such change.

President or Other Authorized Officer
(Vice President, Secretary, Treasurer or other official in charge of a principal business function of the corporation or the business entity)

(If not the President, then the corporation or the business entity must submit certified minutes or bylaws stating legal authority of other authorized officer to bind the corporation or the business entity).

Secretary

Name of Corporation or business entity

Attachment G

G70-A Section Applicability Form

General Permit G70-A Registration
Section Applicability Form

General Permit G70-A was developed to allow qualified applicants to seek registration for a variety of sources. These sources include natural gas well affected facilities, storage tanks, natural gas-fired compressor engines (RICE), natural gas producing units, natural gas-fired in-line heaters, pneumatic controllers, heater treaters, tank truck loading, glycol dehydration units, completion combustion devices, flares, enclosed combustion devices, and vapor recovery systems. All registered facilities will be subject to Sections 1.0, 2.0, 3.0, and 4.0.

General Permit G70-A allows the registrant to choose which sections of the permit they are seeking registration under. Therefore, please mark which additional sections that you are applying for registration under. If the applicant is seeking registration under multiple sections, please select all that apply. Please keep in mind, that if this registration is approved, the issued registration will state which sections will apply to your affected facility.

Section 5	Natural Gas Well Affected Facility	☐
Section 6	Storage Vessels*	☐
Section 7	Gas Producing Units, In-Line Heaters, Heater Treaters, and Glycol Dehydration Reboilers	☐
Section 8	Pneumatic Controllers Affected Facility (NSPS, Subpart OOOO)	☐
Section 9	*Reserved*	☐
Section 10	Natural gas-fired Compressor Engine(s) (RICE) **	☐
Section 11	Tank Truck Loading Facility ***	☐
Section 12	Standards of Performance for Storage Vessel Affected Facilities (NSPS, Subpart OOOO)	☐
Section 13	Standards of Performance for Stationary Spark Ignition Internal Combustion Engines (NSPS, Subpart JJJJ)	☐
Section 14	Control Devices not subject to NSPS, Subpart OOOO	☐
Section 15	National Emissions Standards for Hazardous Air Pollutants for Stationary Reciprocating Internal Combustion Engines (40CFR63, Subpart ZZZZ)	☐
Section 16	Glycol Dehydration Units	☐
Section 17	Dehydration Units With Exemption from NESHAP Standard, Subpart HH § 63.764(d) (40CFR63, Subpart HH)	☐
Section 18	Dehydration Units Subject to NESHAP Standard, Subpart HH and Not Located Within an UA/UC (40CFR63, Subpart HH)	☐
Section 19	Dehydration Units Subject to NESHAP Standard, Subpart HH and Located Within an UA/UC (40CFR63, Subpart HH)	☐

* *Applicants that are subject to Section 6 may also be subject to Section 12 if the applicant is subject to the NSPS, Subpart OOOO control requirements or the applicable control device requirements of Section 14.*

** *Applicants that are subject to Section 10 may also be subject to the applicable RICE requirements of Section 13 and/or Section 15.*

*** *Applicants that are subject to Section 11 may also be subject to control device requirements of Section 14.*

Attachment H

Air Pollution Control Device Data Sheet

Attachment H: Air Pollution Control Device

Vapor Combustion Control Device Sheet

Complete this vapor combustion control device sheet for each enclosed combustion device, flare, thermal oxidizer, or completion combustion device that is located at the natural gas production pad for the purpose of thermally destructing waste gas to control emissions of regulated pollutants to the atmosphere.

IMPORTANT: READ THE INSTRUCTIONS ACCOMPANYING THIS FORM BEFORE COMPLETING.

General Information

1. Control Device ID#: EC001	2. Installation Date: New	
3. Maximum Rated Total Flow Capacity: 131,000 scfd	4. Maximum Design Heat Input: 6.6 MMBtu/hr	5. Design Heat Content: 2300 BTU/scf

Control Device Information

6. Select the type of vapor combustion control device being used: Elevated Flare

7. Manufacturer: Model No. Cimarron Model No. 48" HV ECD	8. Hours of operation per year: 8760

9. List the emission units whose emissions are controlled by this vapor combustion control device: (Emission Point ID#:)

10. Emission Unit ID#	Emission Source Description:	Emission Unit ID#	Emission Source Description:
TANKCOND001-010	Condensate Tank		
TANKPW001-002	PW Tanks		

If this vapor combustor controls emissions from more than six emission units, please attach additional pages.

11. Assist Type	12. Flare Height (ft)	13. Tip Diameter (ft)	14. Was the design per §60.18?
Steam - Air - Pressure - X Non -	25	3.33	Yes

Waste Gas Information

15. Maximum waste gas flow rate (scfm):	16. Heat value of waste gas stream (BTU/ft3)	17. Temperature of the emissions stream (°F)	18. Exit Velocity of the emissions stream (ft/s)
75.87	2,084.81	900	1.45E-01

19. Provide an attachment with the characteristics of the waste gas stream to be burned.

Pilot Information

20. Type/Grade of pilot fuel:	21. Number of pilot lights:	22. Fuel flow rate to pilot flame per pilot (scf/hr):	23. Heat input per pilot (BTU/hr):	24. Will automatic re-ignition be used?
Natural Gas	1	12.6	12800	Yes

25. If automatic re-ignition will be used, describe the method: Based on a monitoring system

26. Describe the method of controlling flame: Flame Rectification, a thermocouple equivalent

27. Is pilot flame equipped with a monitor to detect the presence of the flame? Yes	28. If yes, what type? Thermocouple

29. Pollutant(s) Controlled	30. % Capture Efficiency	31. Manufacturer's Guaranteed Control Efficiency (%)
F/W/B Emissions from TANKCOND	98	98
F/W/B Emissions from TANKPW	98	98

Attachment H: Air Pollution Control Device

Vapor Combustion Control Device Sheet

Complete this vapor combustion control device sheet for each enclosed combustion device, flare, thermal oxidizer, or completion combustion device that is located at the natural gas production pad for the purpose of thermally destructing waste gas to control emissions of regulated pollutants to the atmosphere.

32. Has the control device been tested by the manufacturer and certified? Yes, see spec sheet.

33. Describe all operating ranges and maintenance procedures required by the manufacturer to maintain warranty: See spec sheet for operating ranges.

MONITORING

1) Report any period when visible emissions exceeded 5 minutes during any two-hour period.
2) Monitor the presence of pilot flame at all times with the Flame rectification system, a thermocouple equivalent.
3) Monitor visible emissions from the vapor combustor.
4) Monitor throughput to the vapor combustor.

RECORDKEEPING

1) Record the times and duration of periods when the pilot flame was not present.
2) Records of throughput to the vapor combustor.
3) Records of vapor combustor malfunction or shutdown which resulted in excess emissions.
4) Records of vapor combustor inspection and maintenance activities conducted.

REPORTING

1) Report any period when visible emissions exceeded 5 minutes during any two-hour period.

34. Additional Information Attached? **YES**

Please attach a copy of manufacturer's data sheet. Please attach a copy of manufacturer's drawing.
Please attach a copy of the manufacturer's performance testing.

If any of the requested information is not available, please contact the manufacturer.

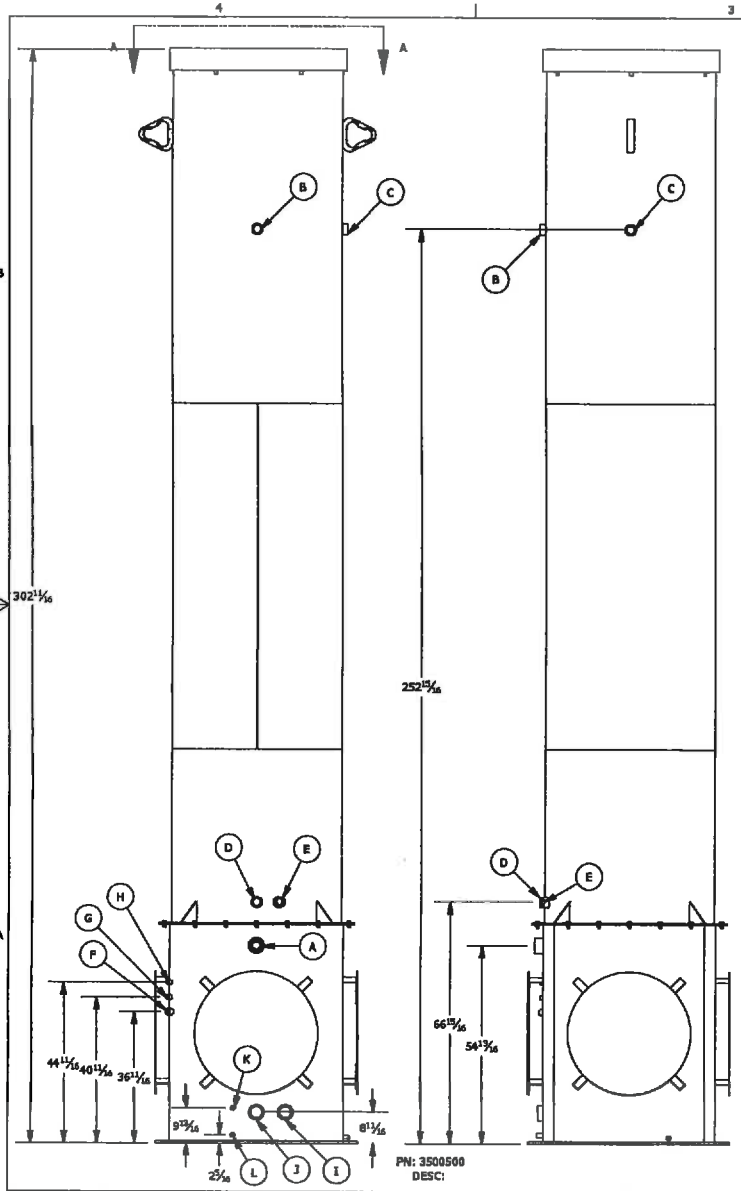

48" DIA x 302 5/8" HEIGHT, 88 ORIFICES
EMISSION CONTROL DEVICE

* >98% TVOC DRE, CERTIFIED USEPA 40 CFR 60, APPENDIX A, SOURCE EMMISIONS TEST METHODS REFERENCED. MEETS ALL EPA & CDPHE REGULATIONS.
* DESTROYS OIL/CONDENSATE PRODUCTION TANK VAPORS W/ NO VISIBLE FLAME.
* EXCELLENT OPACITY AND SMOKELESS OPERATION.
* RELIABLE AND CUSTOMIZABLE IGNITION.
* VERY LOW CAPITAL AND OPERATING COST.
* EASY TO OPERATE AND MAINTAIN.
* FIELD TESTED TO DESTROY UP TO 119.5 MDSCFD (131 MCFD) @ 10 oz/in^2; 2300 BTU/CF WASTE GAS (SG 1.45)
* STRUCTURE CERTIFIED FOR 90 MPH 3-SEC WIND GUST PER ASCE 7-05 & IBC 2006 STANDARDS. HIGHER WIND LOAD RATED STRUCTURES AVAILABLE.

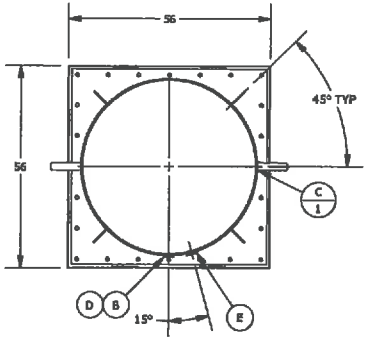

VIEW A-A

PN: 3500500
DESC:

SCHEDULE OF NOZZLES				
MARK	QTY	DESCRIPTION	SERIES	SERVICE
A	1	3" HALF COUPLING	2000#	BURNER WASTE GAS IN
B	1	2" FULL COUPLING	3000#	FLOW TEST/AUTOMATION
C	1	2" FULL COUPLING	3000#	FLOW TEST/AUTOMATION
D	1	2" FULL COUPLING	3000#	SIGHT GLASS
E	1	2" FULL COUPLING	3000#	MANUAL LIGHTING
F	1	1" FULL COUPLING	3000#	PILOT GAS IN
G	1	1/2" FULL COUPLING	3000#	IGNITOR CABLE
H	1	1/2" FULL COUPLING	3000#	AUTOMATION
I	1	3" HALF COUPLING	3000#	DRIP TANK WASTE GAS IN
J	1	3" HALF COUPLING	3000#	DRIP TANK WASTE GAS OUT
K	1	1/2" FULL COUPLING	3000#	AUTOMATION
L	1	1/2" FULL COUPLING	3000#	LIQUID DRAIN

UNLESS OTHERWISE SPECIFIED

1. REMOVE ALL BURRS AND SHARP CORNERS.
2. COR. RAD .03
3. DO NOT SCALE DRAWING.
4. ALL DIMENSIONS ARE IN INCHES.
5. MACHINE FIN.
6. FABRICATION
   .X = ± 0.25
   .XX = ± 0.125
   .XXX = ± 0.06
   ANGLES ± 3°
7. MACHINE
   .X = ±0.030
   .XX = ±0.015
   .XXX = ±0.005
   ANGLES ±1/2°
   CONTRICITY WITHIN 0.010 TIR

APPROVED FOR A.S.M.E CODE, SECTION VIII DIV 1
_____ED,_____ ADDENDA BY_____ DATE_____

CIMARRON
Energy Inc.

TITLE:
48" HIGH VOLUME ECD

DATE: | WO No.: | SHEET: 1 OF 1

DRAWN BY: TDS | REV. | DRAW NO.: 3500500

Attachment O

Emissions Summary Sheet

Attachment O: G70-A Emissions Summary Sheet

Emission Points Data Summary Sheet

Table 1: Emissions Data												
Emission Point ID No. *(Must match Emission Units Table & Plot Plan)*	Emission Point Type[1]	Emission Unit Vented Through This Point *(Must match Emission Units Table & Plot Plan)*		Air Pollution Control Device *(Must match Emission Units Table & Plot Plan)*		All Regulated Pollutants - Chemical Name/CAS[3] *(Speciate VOCs & HAPS)*	Maximum Potential Uncontrolled Emissions [4]		Maximum Potential Controlled Emissions [5]		Emission Form or Phase *(At exit conditions, Solid, Liquid or Gas/Vapor)*	Est. Method Used [6]
		ID No.	Source	ID No.	Device Type		lb/hr	ton/yr	lb/hr	ton/yr		
EP-H001, EP-H002, EP-H003, EP-H004, EP-H005, EP-H006, EP-H007, EP-H008, EP-H009	Vertical Stack	H001, H002, H003, H004, H005, H006, H007, H008, H009	Gas Production Unit Heater	N/A		CO (630080)	0.88	3.83	0.88	3.83	Gas/Vapor /Solid (for PM)	MB AP-42
						NOx (10102439)	1.04	4.56	1.04	4.56		
						CO2 Equivalent N2O (10024972), CO2 (124389), CH4 (74828)	1257.61	5508.34	1257.61	5508.34		
						PM, PM10, PM2.5	0.08	0.35	0.08	0.35		
						Hexane (110543)	0.02	0.08	0.02	0.08		
						Total VOCs	0.06	0.25	0.06	0.25		
F001	n/a	F001	Fugitives	N/A		Benzene (71432)	0.01	0.03	0.01	0.03	Gas/Vapor	MB
						Toluene (108883)	0.02	0.08	0.02	0.08		
						Ethyl benzene (100414)	0.01	0.06	0.01	0.06		
						Hexane (110543)	0.31	1.36	0.31	1.36		
						o,m,p-xylenes (95476,108383,106423)	0.04	0.19	0.04	0.19		
						CO2 Equivalent CO2 (124389)), CH4	70.64	309.40	70.64	309.40		
						VOCs	3.56	15.58	3.56	15.58		
						TAPs (benzene)	0.01	0.03	0.01	0.03		
EP-L001, EP-L002	n/a	L001, L002	Loading (Condensate), Loading (Water)	N/A		VOCs	9.69	2.66	9.69	2.66	Gas/Vapor	MB
						hexane (110543)	0.13	0.03	0.13	0.03		
						CO2 Equivalent CO2 (124389), CH4	9.05	5.39	9.05	5.39		
EP-HR001	n/a	HR001	Haul Truck	N/A		PM, PM10, PM2.5	2.68	5.57	1.34	2.79	Solid	MB
EP-EC001	n/a	TANKCOND001-010, TANKPW001-002, EC001	Condensate Tanks, PW Tanks, and Enclosed Combustor	N/A	Enclosed Combustor	CO (630080)	0.00	0.00	0.38	1.68	Gas/Vapor/ Solid (for PM)	MB
						NOx (10102439)	0.00	0.00	0.46	2.00		
						CO2 Equivalent N2O (10024972), CO2 (124389), CH4	1346.93	5899.56	1589.47	6961.88		
						PM, PM10, PM2.5	0.00	0.00	0.03	0.15		
						Benzene (71432)	0.11	0.48	0.00	0.01		
						Toluene (108883)	0.21	0.93	0.00	0.02		
						ethyl benzene (100414)	0.08	0.36	0.00	0.01		
						hexane (110543)	60.32	264.21	1.21	5.28		
						o,m,p-xylenes (95476,108383,106423)	0.21	0.94	0.00	0.02		
						VOCs	346.93	1519.57	6.94	30.39		
EP-PCV	valve	PCV	Pneumatic CV	N/A		hexane (110543)	0.01	0.05	0.01	0.05	Gas/Vapor	MB
						CO2 Equivalent CO2 (124389)), CH4	8.13	35.61	8.13	35.61		
						VOCs	0.10	0.45	0.10	0.45		
EP-ENG001	Vertical Stack	ENG001	Compressor Engine	N/A		CO (630080)	5.64	24.72	5.64	24.72	Gas/Vapor/ Solid (for PM)	MB
						NOx (10102439)	0.32	1.38	0.32	1.38		
						CO2 Equivalent N2O (10024972), CO2 (124389), CH4 (74828)	28.86	126.42	28.86	126.42		
						PM, PM10, PM2.5	0.00	0.01	0.00	0.01		
						TAPs Formaldehyde (50000)	0.01	0.02	0.01	0.02		
						Total VOCs	0.01	0.03	0.01	0.03		