Dominion Resource Services, Inc.
5000 Dominion Boulevard, Glen Allen, VA 23060
dom.com

RECEIVED
MAY 08 2015
WV DEP / DIV OF AIR QUALITY

Dominion®

April 29, 2015

BY: U.S. CERTIFIED MAIL, RETURN RECEIPT REQUESTED
7012 3460 0003 4189 8055

William F. Durham
Director, Division of Air Quality
WVDEP
601 57th Street
Charleston, WV 25304

RE: **Dominion Transmission, Inc.**
Madison City Plant
Permit Determination Request

Dear Mr. Durham:

Dominion Transmission, Inc. (Dominion) is submitting this request for permit determination for the addition of a natural gas auxiliary generator at our Madison City Plant, an existing administrative and warehousing building to support delivery operations located near Danville, Boone County, West Virginia.

Based on the response from DEP dated December 16, 2013 (enclosed) for a similar unit, Dominion believes a permit is not necessary for the installation and operation of a Generac QT036 auxiliary generator at the Madison City Plant. Information on the unit is included below:

Engine Manufacturer and Model: Generac QT036, manufactured 8/2014
Manufacturer's Rated bhp: 62 bhp
Subject to NSPS Subpart JJJJ? Yes, certified
Subject to NESHAP Subpart ZZZZ? Yes, new source, area source
Fuel Type: Pipeline Quality Natural Gas

Potential Emissions (Based on 8,760 hours)

Pollutant	Source	lbs/hr	tons/yr
NO_X	AP-42	1.14	5.00
CO	AP-42	1.87	8.20
VOC	AP-42	0.18	0.79
SO_2	AP-42	2.96E-04	1.30E-03
PM (filterable)	AP-42	4.78E-03	2.09E-02
PM10 (filterable)	AP-42	4.78E-03	2.09E-02
PM2.5 (filterable)	AP-42	4.78E-03	2.09E-02
PM (condensibles)	AP-42	4.98E-03	2.18E-02
Formaldehyde	AP-42	1.03E-02	4.52E-02
Total HAP	AP-42	0.05	0.23

The auxiliary generator is not deemed to be a stationary source since there are no substantive requirements and the potential emission are below permitting thresholds. 40 CFR 60 Subpart JJJJ applies to the generator which requires Dominion to purchase an engine certified to emission standards in 40 CFR 1048.101(c); therefore, no performance tests are required. The engine is EPA certified and by meeting Subpart JJJJ requirements, the engine also meets 40 CFR Part 63, Subpart ZZZZ requirements. Dominion will meet the requirements of Subpart JJJJ by complying with the following requirements:

- Maintaining records of maintenance conducted in accordance with the manufacturer's instructions or per the facility maintenance plan;
- Maintaining records of the hours of operation including number of hours of emergency usage with reason and number of hours of non-emergency usage; and
- Maintaining a copy of the engine certification.

If you require any additional information, please contact Rebekah Remick at 804-273-3536 or via email at Rebekah.J.Remick@dom.com.

Sincerely,

Amanda B. Tornabene
Director, Gas Environmental Services

Enclosures

Appendix A: Permit Determination for Madison City Plant

Appendix B: Previous Review for Similar Unit

Appendix A

Permit Determination for Madison City Plant

WEST VIRGINIA DEPARTMENT OF ENVIRONMENTAL PROTECTION DIVISION OF AIR QUALITY 601 57th Street, SE Charleston, WV 25304 Phone: (304) 926-0475 www.dep.wv.gov/daq	***PERMIT DETERMINATION FORM (PDF)*** **FOR AGENCY USE ONLY:** PLANT I.D. # _____ PDF # _____ PERMIT WRITER: _____

1. NAME OF APPLICANT (AS REGISTERED WITH THE WV SECRETARY OF STATE'S OFFICE):
   Dominion Transmissions, Inc.

2. NAME OF FACILITY (IF DIFFERENT FROM ABOVE):	3. NORTH AMERICAN INDUSTRY CLASSIFICATION SYSTEM (**NAICS**) CODE:
Madison City Plant	551114

4A. MAILING ADDRESS:	4B. PHYSICAL ADDRESS:
445 West Main Street, Clarksburg, WV 26301	1676 Lick Creek Road, Danville, WV 25053

5A. DIRECTIONS TO FACILITY (PLEASE PROVIDE **MAP** AS **ATTACHMENT A**):
I-79 South to I-77 South. Take exit 101 and merge onto I-64 West. Take exit 58A and merge onto US-119 South. Left onto Old Co 7/Riverside Dr; left onto Lick Creek Road. Plant on the right.

5B. NEAREST ROAD:	5C. NEAREST CITY OR TOWN:	5D. COUNTY:
Lick Creek Road	Danville, WV	Boone
5E. UTM NORTHING (KM):	**5F. UTM EASTING (KM):**	**5G. UTM ZONE:**
4214691.4	423255.9	17

6A. INDIVIDUAL TO CONTACT IF MORE INFORMATION IS REQUIRED:		6B. TITLE:
Rebekah Remick		Environmental Specialist III
6C. TELEPHONE:	**6D. FAX:**	**6E. E-MAIL:**
804-273-3536	804-273-2964	Rebekah.J.Remick@dom.com

7A. DAQ PLANT I.D. NO. (FOR AN EXISTING FACILITY ONLY):	7B. PLEASE LIST ALL CURRENT 45CSR13, 45CSR14, 45CSR19 AND/OR TITLE V (45CSR30) PERMIT NUMBERS ASSOCIATED WITH **THIS** PROCESS (FOR AN EXISTING FACILITY ONLY):
___ ___ ___ – ___ ___ ___ ___ ___	N/A

7C. IS THIS PDF BEING SUBMITTED AS THE RESULT OF AN ENFORCEMENT ACTION? IF YES, PLEASE LIST: No

8A. TYPE OF EMISSION SOURCE (CHECK ONE):	8B. IF ADMINISTRATIVE UPDATE, DOES DAQ HAVE THE APPLICANT'S CONSENT TO UPDATE THE EXISTING PERMIT WITH THE INFORMATION CONTAINED HEREIN?
☒ **NEW SOURCE** ☐ **ADMINISTRATIVE UPDATE** ☐ **MODIFICATION** ☐ **OTHER** (PLEASE EXPLAIN IN 11B)	☐ **YES** ☐ **NO**

9. IS *DEMOLITION* OR PHYSICAL *RENOVATION* AT AN EXISTING FACILITY INVOLVED? ☐ **YES** ☒ **NO**

10A. DATE OF ANTICIPATED INSTALLATION OR CHANGE:	10B. DATE OF ANTICIPATED START-UP:
5/30/2015	6/2015

11A. PLEASE PROVIDE A **DETAILED PROCESS FLOW DIAGRAM** SHOWING EACH PROPOSED OR MODIFIED PROCESS EMISSION POINT AS **ATTACHMENT B**.

11B. PLEASE PROVIDE A **DETAILED PROCESS DESCRIPTION** AS **ATTACHMENT C**.

12. PLEASE PROVIDE **MATERIAL SAFETY DATA SHEETS (MSDS)** FOR ALL MATERIALS PROCESSED, USED OR PRODUCED AS **ATTACHMENT D**. FOR CHEMICAL PROCESSE, PLEASE PROVIDE A MSDS FOR EACH COMPOUND EMITTED TO AIR.

13A. **REGULATED AIR POLLUTANT EMISSIONS:**

⇒ **FOR A NEW FACILITY,** PLEASE PROVIDE PLANT WIDE EMISSIONS BASED ON THE POTENTIAL TO EMIT (PTE) FOR THE FOLLOWING AIR POLLUTANTS INCLUDING ALL PROCESSES.

⇒ **FOR AN EXISTING FACILITY,** PLEASE PROVIDE THE PROPOSED CHANGE IN EMISSIONS BASED ON THE PTE OF ALL PROCESS CHANGES FOR THE FOLLOWING AIR POLLUTANTS.

PTE FOR A GIVEN POLLUTANT IS TYPICALLY BEFORE AIR POLLUTION CONTROL DEVICES AND IS COLLECTED BASED ON THE MAXIMUM DESIGN CAPACITY OF PROCESS EQUIPMENT.

POLLUTANT	HOURLY PTE (LB/HR)	YEARLY PTE (TON/YR) (HOURLY PTE MULTIPLIED BY 8760 HR/YR) DIVIDED BY 2000 LB/TON
PM	4.78E-03	2.09E-02
PM_{10}	4.78E-03	2.09E-02
VOCs	0.18	0.79
CO	1.87	8.20
NO_x	1.14	5.00
SO_2	2.96E-04	1.30E-03
Pb		
HAPs (AGGREGATE AMOUNT)	0.05	0.23
TAPs (INDIVIDUALLY)*		
OTHER (INDIVIDUALLY)*		

* ATTACH ADDITIONAL PAGES AS NEEDED

13B. PLEASE PROVIDE ALL **SUPPORTING CALCULATIONS** AS **ATTACHMENT E**.

CALCULATE AN HOURLY AND YEARLY PTE OF EACH PROCESS EMISSION POINT (SHOWN IN YOUR DETAILED PROCESS FLOW DIAGRAM) FOR ALL AIR POLLUTANTS LISTED ABOVE INCLUDING INDIVIDUAL HAP'S (LISTED IN SECTION 112[b] OF THE 1990 CAAA), TAP'S (LISTED IN 45CSR27), AND OTHER AIR POLLUTANTS (E.G. POLLUTANTS LISTED IN TABLE 45-13A OF 45CSR13, MINERAL ACIDS PER 45CSR7, ETC.).

14. **CERTIFICATION OF DATA**

I, JEFF MURPHY (*TYPE NAME*) ATTEST THAT ALL THE REPRESENTATIONS CONTAINED IN THIS APPLICATION, OR APPENDED HERETO, ARE TRUE, ACCURATE, AND COMPLETE TO THE BEST OF MY KNOWLEDGE BASED ON INFORMATION AND BELIEF AFTER REASONABLE INQUIRY, AND THAT I AM A ***RESPONSIBLE OFFICIAL*** (*PRESIDENT, VICE PRESIDENT, SECRETARY OR TREASURER, GENERAL PARTNER OR SOLE PROPRIETOR*) OF THE APPLICANT.

SIGNATURE OF RESPONSIBLE OFFICIAL: Jeffrey L. Murphy

TITLE: VP AND GENERAL MANAGER DOMINION EAST OHIO DATE: 04 / 27 / 2015.

** THE DEFINITION OF THE PHRASE '***RESPONSIBLE OFFICIAL***' CAN BE FOUND AT 45CSR13, SECTION 2.23.

NOTE: PLEASE CHECK ENCLOSED ATTACHMENTS:

☒ **ATTACHMENT A** ☒ **ATTACHMENT B** ☒ **ATTACHMENT C** ☐ **ATTACHMENT D** ☒ **ATTACHMENT E**

RECORDS ON ALL CHANGES ARE REQUIRED TO BE KEPT AND MAINTAINED ON-SITE FOR TWO (2) YEARS.

THE PERMIT DETERMINATION FORM WITH THE INSTRUCTIONS CAN BE FOUND ON DAQ'S PERMITTING SECTION WEB SITE:

www.dep.wv.gov/daq

Attachment A

Facility Location

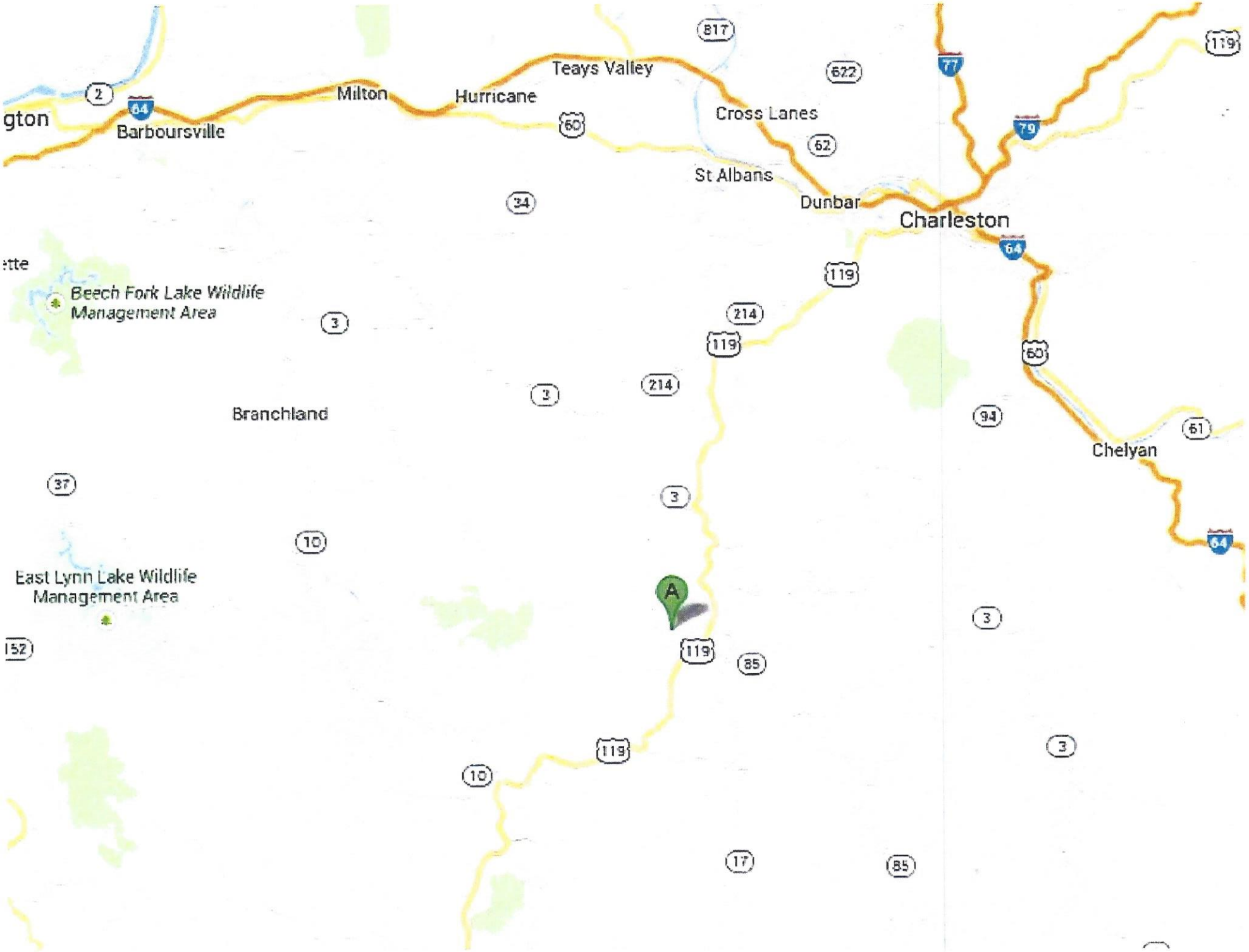
gton
Barboursville
Milton
Hurricane
Teays Valley
Cross Lanes
St Albans
Dunbar
Charleston
Chelyan
Branchland
Beech Fork Lake Wildlife Management Area
East Lynn Lake Wildlife Management Area
A
817
622
119
77
79
2
64
60
62
34
3
214
94
61
37
10
152
85
17

Rd
119/07
Horse Branch
Lick Creek
Georgia Ln
A
Lick Creek Rd
Yates Ln
7/03

Attachment B

Process Flow Diagram

Process Flow Diagram for the Emergency Auxiliary Generator

Madison City Plant

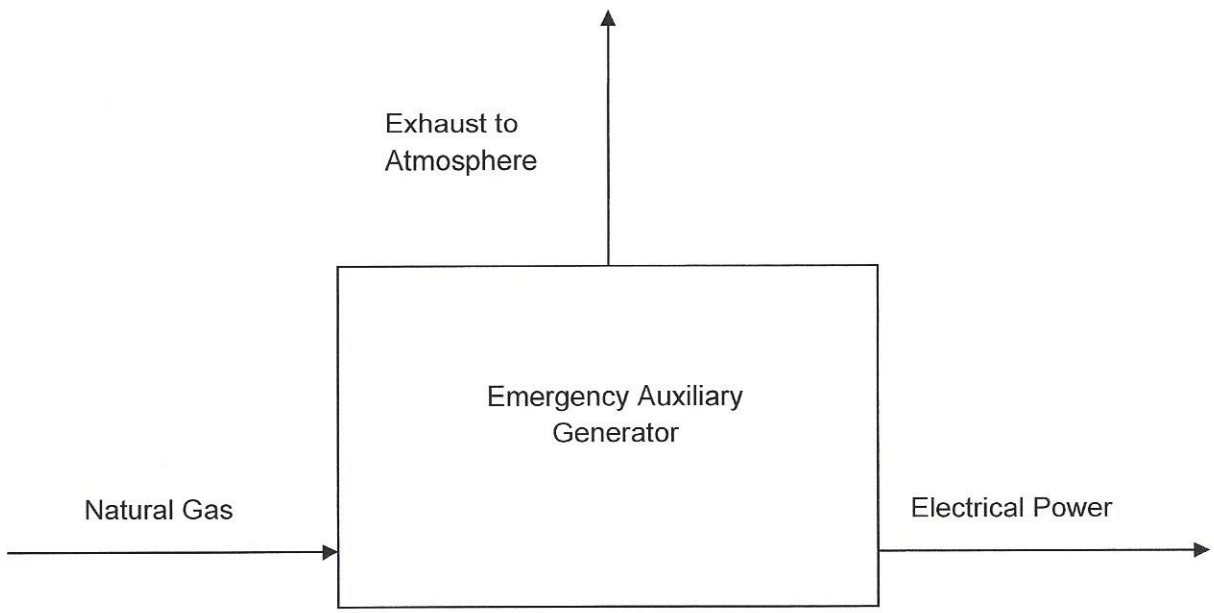

Attachment C

Process Description

Process Description

Madison City Plant is an existing office/warehouse storage area for Dominion Hope employees to support delivery operations located near Danville, Boone County, West Virginia. This permit determination is for a new natural gas emergency generator to supply power to the facility in the event of a power loss.

Attachment E

Supporting Calculations

Company Name:	Dominion Transmission, Inc.		
Facility/Division:	Madison City Plant		
Prepared By:	Becky Remick		
Input Data:	Generac QT036		
Design Class:	4-stroke rich burn		
Engine Power:	62	bhp	
Rated Elctrical Output:	36	kW	
Fuel Consumption:	503	cf/hr	(Worse case at 100% load from manufacturer spec sheet)
Fuel Input:	0.50	MMBtu/hr	
Maximum Hours of Operation:	8,760	hrs/yr	
	500	hrs/yr	
Heating Value:	1,000	Btu/cf	

Emission Calculations

Pollutant	Emission Factor		Emissions at 8760 hrs/yr (lb/hr)	(lb/day)	(tons/yr)	Emissions at 500 hrs/yr (tons/yr)
Criteria Pollutants						
PM (filterable)	9.50E-03	lb/MMBtu	4.78E-03	0.11	2.09E-02	1.19E-03
PM-10 (filterable)	9.50E-03	lb/MMBtu	4.78E-03	0.11	2.09E-02	1.19E-03
PM-2.5 (filterable)	9.50E-03	lb/MMBtu	4.78E-03	0.11	2.09E-02	1.19E-03
PM (condensibles)	9.91E-03	lb/MMBtu	4.98E-03	0.12	2.18E-02	1.25E-03
SO2	5.88E-04	lb/MMBtu	2.96E-04	0.01	1.30E-03	7.39E-05
CO	3.72	lb/MMBtu	1.87	44.91	8.20	4.68E-01
NO_x	2.27	lb/MMBtu	1.14	27.40	5.00	2.85E-01
VOC	0.358	lb/MMBtu	0.18	4.32	0.79	4.50E-02
Greenhouse Gases						
CO_2	117.0	lb/MMBtu	58.84	--	257.72	14.71
CH_4	2.20E-03	lb/MMBtu	0.00	--	0.00	0.00
N_2O	2.20E-04	lb/MMBtu	0.00	--	0.00	0.00
CO_2e	117.1	lb/MMBtu	58.90	--	257.98	14.73
Hazardous Air Pollutants						
1,1,2,2-Tetrachloroethane	2.53E-05	lb/MMBtu	1.27E-05	--	5.57E-05	3.18E-06
1,1,2-Trichloroethane	1.53E-05	lb/MMBtu	7.70E-06	--	3.37E-05	1.92E-06
1,1-Dichloroethane	1.13E-05	lb/MMBtu	5.68E-06	--	2.49E-05	1.42E-06
1,2-Dichloroethane	1.13E-05	lb/MMBtu	5.68E-06	--	2.49E-05	1.42E-06
1,2-Dichloropropane	1.30E-05	lb/MMBtu	6.54E-06	--	2.86E-05	1.63E-06
1,3-Butadiene	6.63E-04	lb/MMBtu	3.33E-04	--	1.46E-03	8.34E-05
1,3-Dichloropropene	1.27E-05	lb/MMBtu	6.39E-06	--	2.80E-05	1.60E-06
Acrolein	2.63E-03	lb/MMBtu	1.32E-03	--	5.79E-03	3.31E-04
Acetaldehyde	2.79E-03	lb/MMBtu	1.40E-03	--	6.15E-03	3.51E-04
Benzene	1.58E-03	lb/MMBtu	7.95E-04	--	3.48E-03	1.99E-04
Butr/isobutyraldehyde	4.86E-05	lb/MMBtu	2.44E-05	--	1.07E-04	6.11E-06
Carbon Tetrachloride	1.77E-05	lb/MMBtu	8.90E-06	--	3.90E-05	2.23E-06
Chlorobenzene	1.29E-05	lb/MMBtu	6.49E-06	--	2.84E-05	1.62E-06
Chloroform	1.37E-05	lb/MMBtu	6.89E-06	--	3.02E-05	1.72E-06
Ethane	7.04E-02	lb/MMBtu	3.54E-02	--	1.55E-01	8.85E-03
Ethylbenzene	2.48E-05	lb/MMBtu	1.25E-05	--	5.46E-05	3.12E-06
Ethylene Dibromide	2.13E-05	lb/MMBtu	1.07E-05	--	4.69E-05	2.68E-06
Formaldehyde	2.05E-02	lb/MMBtu	1.03E-02	--	4.52E-02	2.58E-03
Methanol	3.06E-03	lb/MMBtu	1.54E-03	--	6.74E-03	3.85E-04
Methylene Chloride	4.12E-05	lb/MMBtu	2.07E-05	--	9.08E-05	5.18E-06
Naphthalene (POM)	9.71E-05	lb/MMBtu	4.88E-05	--	2.14E-04	1.22E-05
PAH	1.41E-04	lb/MMBtu	7.09E-05	--	3.11E-04	1.77E-05
Styrene	1.19E-05	lb/MMBtu	5.99E-06	--	2.62E-05	1.50E-06
Toluene	5.58E-04	lb/MMBtu	2.81E-04	--	1.23E-03	7.02E-05
Vinyl Chloride	7.18E-06	lb/MMBtu	3.61E-06	--	1.58E-05	9.03E-07
Xylene	1.95E-04	lb/MMBtu	9.81E-05	--	4.30E-04	2.45E-05
TOTAL HAP:			**0.052**		**0.227**	**0.013**

(1) All emission factors from AP-42, Section 3.2, Natural Gas-Fired Reciprocating Engines, Table 3.2-3, 7/00

(2) GHG lb/MMBtu numbers based on 40 CFR Part 98 Tables C-1 and C-2 for natural gas

For example: CO_2 = (53.06 kg CO_2/MMBtu) / (0.453592 kg/lb) = 117.0 lb/MMBtu

(3) Global Warming Potentials = 25 for CH_4 and 298 for N_2O (per 40 CFR Part 98 Table A-1 to Subpart A)

For example: CO_2e = (117.0 lb/MMBtu) + (0.0022 lb/MMBtu * 25) + (0.00022 lb/MMBtu * 298) = 117.1 lb/MMBtu

Quietsource® Series

GENERAC®

QUIETSOURCE® SERIES

Standby Generators
Liquid-Cooled Gas Engine

INCLUDES:

- Two Line LCD Tri-Lingual Digital Nexus™ Controller
- Isochronous Electronic Governor
- Sound Attenuated Enclosure
- Closed Coolant Recovery System
- Smart Battery Charger
- UV/Ozone Resistant Hoses
- ±1% Voltage Regulation
- Natural Gas or LP Operation
- 2 Year Limited Warranty
- UL 2200 Listed

Standby Power Rating

Model QT022 (Aluminum - Gray) - 22 kW 60 Hz
Model QT027 (Aluminum - Gray) - 27 kW 60 Hz
Model QT036 (Aluminum - Gray) - 36 kW 60 Hz
Model QT048 (Aluminum - Gray) - 48 kW 60 Hz

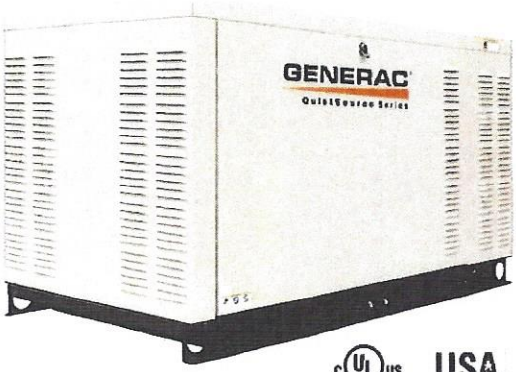

c UL us LISTED USA QUIET TEST

Meets EPA Emission Regulations
22 & 27 kW are CA/MA emissions compliant
48 kW meets CA/MA emissions requirements with optional catalyst
36 kW not for sale in CA/MA

FEATURES

- **INNOVATIVE DESIGN & PROTOTYPE TESTING** are key components of GENERAC'S success in "IMPROVING POWER BY DESIGN." But it doesn't stop there. Total commitment to component testing, reliability testing, environmental testing, destruction and life testing, plus testing to applicable CSA, NEMA, EGSA, and other standards, allows you to choose GENERAC POWER SYSTEMS with the confidence that these systems will provide superior performance.

- **TEST CRITERIA:**
  - ✓ PROTOTYPE TESTED
  - ✓ SYSTEM TORSIONAL TESTED
  - ✓ NEMA MG1-22 EVALUATION
  - ✓ MOTOR STARTING ABILITY

- **SOLID-STATE, FREQUENCY COMPENSATED VOLTAGE REGULATION.** This state-of-the-art power maximizing regulation system is standard on all Generac models. It provides optimized FAST RESPONSE to changing load conditions and MAXIMUM MOTOR STARTING CAPABILITY by electronically torque-matching the surge loads to the engine. Digital voltage regulation at ±1%.

- **SINGLE SOURCE SERVICE RESPONSE** from Generac's extensive dealer network provides parts and service know-how for the entire unit, from the engine to the smallest electronic component.

- **GENERAC TRANSFER SWITCHES.** Long life and reliability are synonymous with GENERAC POWER SYSTEMS. One reason for this confidence is that the GENERAC product line includes its own transfer systems and controls for total system compatibility.

GENERAC® ISO 9001:2008

GENERAC

22 • 27 • 36 • 48 kW

application & engineering data

GENERATOR SPECIFICATIONS

Type	Synchronous
Rotor Insulation Class	H (22 & 27 kW) or F (36 & 48 kW)
Stator Insulation Class	H
Telephone Interference Factor (TIF)	<50
Alternator Output Leads 1-Phase	4 wire
Alternator Output Leads 3-Phase	6 wire
Bearings	Sealed Ball
Coupling	Flexible Disc
Excitation System	Direct

VOLTAGE REGULATION

Type	Electronic
Sensing	Single Phase
Regulation	± 1%

GOVERNOR SPECIFICATIONS

Type	Electronic
Frequency Regulation	Isochronous
Steady State Regulation	± 0.25%

ELECTRICAL SYSTEM

Battery Charge Alternator	12 Volt 30 Amp
Static Battery Charger	2 Amp
Recommended Battery	Group 26 (22, 27 & 36 kW) or Group 24F (48 kW), 525CCA
System Voltage	12 Volts

GENERATOR FEATURES

Revolving field heavy duty generator
Directly connected to the engine
Operating temperature rise 120 °C above a 40 °C ambient
Class H insulation is rated at 150 °C rise at 25 °C ambient
Class F insulation is rated at 145 °C rise at 25 °C ambient
All models fully prototyped tested

ENCLOSURE FEATURES

Aluminum weather protective enclosure	Ensures protection against mother nature. Electrostatically applied textured epoxy paint for added durability.
Enclosed critical grade muffler	Quiet, critical grade muffler is mounted inside the unit to prevent injuries.
Small, compact, attractive	Makes for an easy, eye appealing installation.
SAE	Sound attenuated enclosure ensures quiet operation.

ENGINE SPECIFICATIONS: 22, 27 & 36 kW

Make	Generac
Model	In-line
Cylinders	4
Displacement (Liters)	2.4
Bore (in/mm)	3.41/86.5
Stroke (in/mm)	3.94/100
Compression Ratio	9.5:1
Intake Air System	Naturally Aspirated (22 & 27 kW) or Turbocharged/Aftercooled (36 kW)
Lifter Type	Hydraulic

ENGINE SPECIFICATIONS: 48 kW

Make	Generac
Model	V-Type
Cylinders	8
Displacement (Liters)	5.4
Bore (in/mm)	3.55/90.2
Stroke (in/mm)	4.17/105.9
Compression Ratio	9:1
Intake Air System	Naturally Aspirated
Lifter Type	Hydraulic

ENGINE LUBRICATION SYSTEM

Oil Pump Type	Gear
Oil Filter Type	Full flow spin-on cartridge
Crankcase Capacity (qt/l)	4/3.8 (22, 27 & 36 kW) or 6/5.7 (48 kW)

ENGINE COOLING SYSTEM

Type	Closed
Water Pump	Belt driven
Fan Speed (rpm)	1980 - 22 & 27 kW 1500 - 36 kW 1954 - 48 kW
Fan Diameter (in/mm)	18.1/459.7 (22 & 27 kW) or 22/558.8 (36 & 48 kW)
Fan Mode	Pusher (22 & 27 kW) or Puller (36 & 48 kW)

FUEL SYSTEM

Fuel Type	Natural gas, propane vapor
Carburetor	Down Draft
Secondary Fuel Regulator	Standard
Fuel Shut Off Solenoid	Standard
Operating Fuel Pressure	5-14" water column/9-26 mm HG

(All ratings in accordance with BS5514, ISO3046, ISO8528, SAE J1349 and DIN6271)

22 • 27 • 36 • 48 kW

operating data

GENERATOR OUTPUT VOLTAGE/kW - 60 Hz

		kW LPG	Amp LPG	kW Nat. Gas	Amp Nat. Gas	CB Size (Both)
QT022	120/240 V, 1Ø, 1.0 pf	22	92	22	92	100
	120/208 V, 3Ø, 0.8 pf	22	76	22	76	80
	120/240 V, 3Ø, 0.8 pf	22	66	22	66	80
QT027	120/240 V, 1Ø, 1.0 pf	27	113	25	104	125
	120/208 V, 3Ø, 0.8 pf	27	94	25	87	100
	120/240 V, 3Ø, 0.8 pf	27	81	25	75	90
QT036	120/240 V, 1Ø, 1.0 pf	36	150	35	146	175
	120/208 V, 3Ø, 0.8 pf	36	125	35	121	150
	120/240 V, 3Ø, 0.8 pf	36	108	35	105	125
	277/480 V, 3Ø, 0.8 pf	36	54	35	53	60
QT048	120/240 V, 1Ø, 1.0 pf	48	200	48	200	200
	120/208 V, 3Ø, 0.8 pf	48	166.5	48	166	175
	120/240 V, 3Ø, 0.8 pf	48	144	48	144	150
	277/480 V, 3Ø, 0.8 pf	48	72	48	72	80

SURGE CAPACITY IN AMPS

		Voltage Dip @ < .4 pf	
		15%	30%
QT022	120/240 V, 1Ø	89	216
	120/208 V, 3Ø	74	180
	120/240 V, 3Ø	64	156
QT027	120/240 V, 1Ø	109	265
	120/208 V, 3Ø	91	221
	120/240 V, 3Ø	79	192
QT036	120/240 V, 1Ø	54	149
	120/208 V, 3Ø	87	210
	120/240 V, 3Ø	75	182
	277/480 V, 3Ø	36	87
QT048	120/240 V, 1Ø	69	189
	120/208 V, 3Ø	111	269
	120/240 V, 3Ø	96	233
	277/480 V, 3Ø	43	104

ENGINE FUEL CONSUMPTION

		Natural Gas		Propane	
		(ft^3/hr)	(m^3/hr)	(gal/hr)	(l/hr)
QT022	Exercise cycle	42	1.2	0.44	1.7
	25% of rated load	100	2.8	1.1	4.2
	50% of rated load	190	5.4	2.1	7.8
	75% of rated load	255	7.2	2.8	10.5
	100% of rated load	316	9	3.4	13
QT027	Exercise cycle	42	1.2	0.44	1.7
	25% of rated load	108	3.1	1.2	4.5
	50% of rated load	197	5.6	2.1	8.1
	75% of rated load	287	8.2	3.1	11.8
	100% of rated load	359	10.2	3.9	14.8
QT036	Exercise cycle	48	1.4	0.5	2
	25% of rated load	156	4.4	1.7	6.4
	50% of rated load	282	8	3.1	11.6
	75% of rated load	392	11.1	4.3	16.2
	100% of rated load	503	14.3	5.5	20.8
QT048	Exercise cycle	95	2.7	1	3.9
	25% of rated load	204	5.8	2.16	8.5
	50% of rated load	392	11.1	4.14	15.7
	75% of rated load	547	15.5	5.8	22.8
	100% of rated load	756	21.5	7.96	31.3

Note: **Fuel pipe must be sized for full load.**

For Btu content, multiply gal/hr x 90950 (LP) or ft^3/hr x 1000 (NG)

For megajoule content, multiply l/hr x 25.35 (LP) or m^3/hr x 37.26 (NG)

Refer to "Emissions Data Sheets" for maximum fuel flow for EPA and SCAQMD permitting purposes.

STANDBY RATING: Standby ratings apply to installations served by a reliable utility source. The standby rating is applicable to varying loads for the duration of a power outage. There is no overload capability for this rating. Ratings are in accordance with ISO-3046-1. Design and specifications are subject to change without notice.

GENERAC®

22 • 27 • 36 • 48 kW

operating data

ENGINE COOLING

	22 kW	27 kW	36 kW	48 kW
Air flow (inlet air including alternator and combustion air in cfm/cmm)	2400/68	2400/68	2200/62.3	4350/123.2
System coolant capacity (gal/liters)	3/11.4	3/11.4	2.5/9.5	3/11.4
Heat rejection to coolant (BTU per hr/MJ per hr)	99,000/104.5	105,000/110.8	145,000/153	186,000/196.2
Maximum operation air temperature on radiator (°C/°F)	60/150			
Maximum ambient temperature (°C/°F)	50/140			

COMBUSTION REQUIREMENTS

Flow at rated power (cfm/cmm)	68/1.9	68/1.9	106/3	163/4.6

SOUND EMISSIONS

Sound output in dB(A) at 23 ft (7 m) with generator in exercise mode*	61	61	58	63
Sound output in dB(A) at 23 ft (7 m) with generator operating at normal load*	70	70	64	68

*Sound levels are taken from the front of the generator. Sound levels taken from other sides of the generator may be higher depending on installation parameters.

EXHAUST

Exhaust flow at rated output (cfm/cmm)	165/4.7	180/5.1	300/8.5	414/11.7
Exhaust temperature at muffler outlet (°C/°F)	482/900	538/1000	579/1075	552/1025

ENGINE PARAMETERS

Rated Synchronous rpm	1800

POWER ADJUSTMENT FOR AMBIENT CONDITIONS

Temperature Deration ..... 3% for every 10 °C above 25 °C or 1.65% for every 10 °F above 77 °F
Altitude Deration (22, 27 & 48 kW) ..... 1% for every 100 m above 183 m or 3% for every 1000 ft above 600 ft
Altitude Deration (36 kW) ..... 1% for every 100 m above 915 m or 3% for every 1000 ft above 3000 ft

CONTROLLER FEATURES

2-Line Plain Text LCD Display ..... Simple user interface for ease of operation.
Mode Switch: Auto ..... Automatic Start on Utility failure. 7 day exerciser
Off ..... Stops unit. Power is removed. Control and charger still operate.
Manual ..... Start with starter control, unit stays on. If utility fails, transfer to load takes place.
Programmable start delay between 10-30 seconds ..... Standard
Engine Start Sequence ..... Cyclic cranking: 16 sec on, 7 rest (90 sec maximum duration)
Engine Warm-up ..... 5 sec
Engine Cool-Down ..... 1 min
Starter Lock-out ..... Starter cannot re-engage until 5 sec after engine has stopped.
Smart Battery Charger ..... Standard
Automatic Voltage Regulation with Over and Under Voltage Protection ..... Standard
Automatic Low Oil Pressure Shutdown ..... Standard
Overspeed Shutdown ..... Standard, 72 Hz
High Temperature Shutdown ..... Standard
Overcrank Protection ..... Standard
Safety Fused ..... Standard
Failure to Transfer Protection ..... Standard
Low Battery Protection ..... Standard
50 Event Run Log ..... Standard
Future Set Capable Exerciser ..... Standard
Incorrect Wiring Protection ..... Standard
Internal Fault Protection ..... Standard
Common External Fault Capability ..... Standard
Governor Failure Protection ..... Standard

22 • 27 • 36 • 48 kW

available accessories

Model #	Product	Description
005630-0 - 22, 27 & 36 kW 005632-0 - 48 kW	Cold Weather Kit	If the temperature regularly falls below 32 °F (0 °C), install a cold weather kit to maintain optimal battery temperature. Kit consists of battery warmer with thermostat built into the wrap.
005616-0 - 22, 27 & 36 kW 006204-0 - 48 kW	Extreme Cold Weather Kit	Recommended where the temperature regularly falls below 32 °F (0 °C) for extended periods of time. For liquid cooled units only.
005621-0	Auxiliary Transfer Switch Contact Kit	The auxiliary transfer switch contact kit allows the transfer switch to lock out a single large electrical load you may not need.
005651-0	Base Plug Kit	Add base plugs to the base of the generator to keep out debris.
005704-0	Paint Kit	If the generator enclosure is scratched or damaged, it is important to touch-up the paint to protect from future corrosion. The paint kit includes the necessary paint to properly maintain or touch-up a generator enclosure.
005656-0 - 22 & 27 kW 005984-0 - 36 kW 006205-0 - 48 kW	Scheduled Maintenance Kit	The Liquid-Cooled Scheduled Maintenance Kits offer all the hardware necessary to perform complete maintenance on Generac liquid-cooled generators.
005928-0	Wireless Remote	Completely wireless and battery powered, Generac's wireless remote monitor provides you with instant status information without ever leaving the house.
005951-0	Advanced Wireless Remote	Remotely control generator functions with the advanced model's LCD display. In addition to remote testing of the generator, set the exercise cycle and maintenance interval reminders.
006199-0	PMM Starter Kit	The PMM Starter Kit consists of a 24 VAC, field installed transformer that enables the use of the 24 VAC Power Management Modules (PMMs) and one PMM. The standard controller (without starter kit) can control two HVAC loads with no additional hardware. Not compatible with pre-wired switches.
006186-0	Power Management Module (50 Amps)	Power Management Modules are used in conjunction with the Smart Switch to increase its power management capabilities. It gives the Smart Switch additional power management flexibility not found in any other transfer switch. Not compatible with pre-wired switches. Note: PMM Starter Kit required.
006463-1	Mobile Link™	Generac's Mobile Link allows you to check the status of your generator from anywhere that you have access to an Internet connection from a PC or with any smart device. You will even be notified when a change in the generator's status occurs via e-mail or text message. Note: Harness Adapter Kit required.
006478-0	Harness Adapter Kit	The Harness Adapter Kit is required to make liquid-cooled units compatible with Mobile Link™.

GENERAC

22 • 27 • 36 • 48 kW

interconnections

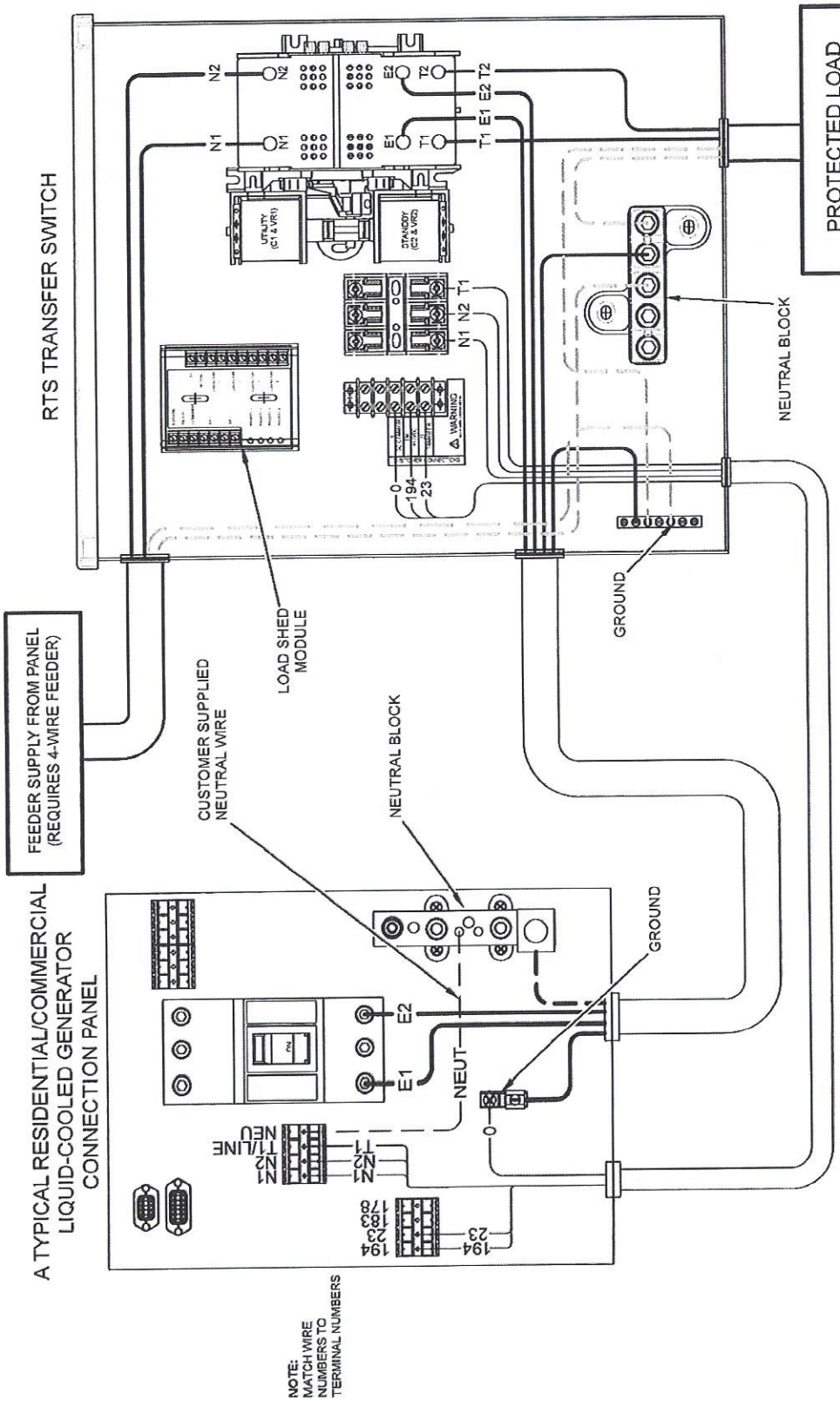

LIQUID COOLED INSTALLATION

Note: Use the generator's specific installation manual and wiring diagrams to verify generator wiring connections, as they may differ slightly from illustration.

NOTES:

1) MINIMUM RECOMMENDED CONCRETE PAD SIZE:1041 (41.0") WIDE X 1892 (74 1/2") LONG.REFERENCE INSTALLATION GUIDE SUPPLIED WITH UNIT FOR CONCRETE PAD GUIDELINES.
2) ALLOW SUFFICIENT ROOM ON ALL SIDES OF THE GENERATOR FOR MAINTENANCE AND SERVICING. THIS UNIT MUST BE INSTALLED IN ACCORDANCE WITH CURRENT APPLICABLE NFPA 37 AND NFPA 70 STANDARDS AS WELL AS ANY OTHER FEDERAL, STATE AND LOCAL CODES FOR MINIMUM DISTANCES FROM OTHER STRUCTURES.
3) CIRCUIT BREAKER INFORMATION: SEE SPECIFICATION SHEET WITHIN OWNERS MANUAL.
4) INSIDE STUB-UP AREA FOR AC LOAD LEAD CONDUIT CONNECTION, NEUTRAL CONNECTION, BATTERY CHARGER 120 VOLT AC (0.5 AMP MAX.) CONNECTION, ACCESS TO TRANSFER SWITCH CONTROL WIRES, AND TRANSFER SWITCH CONNECTION (IF SO EQUIPPED). REMOVE FRONT COVER FOR ACCESS.

4A) ONE 1-1/2" NEMA ELECTRICAL KNOCKOUT AND TWO 1/2" NEMA ELECTRICAL KNOCKOUTS PROVIDED FOR OUTSIDE AC LOAD CONDUIT CONNECTION, NEUTRAL CONNECTION, BATTERY CHARGER 120 VOLT AC (0.5 AMP MAX.) CONNECTION, ACCESS TO TRANSFER SWITCH CONTROL WIRES, AND TRANSFER SWITCH CONNECTION (IF SO EQUIPPED). REMOVE FRONT COVER FOR ACCESS.

5) REFERENCE OWNERS MANUAL FOR LIFTING WARNINGS.
6) REMOVE LIFT-OFF ENCLOSURE TO ACCESS EXHAUST MUFFLER.

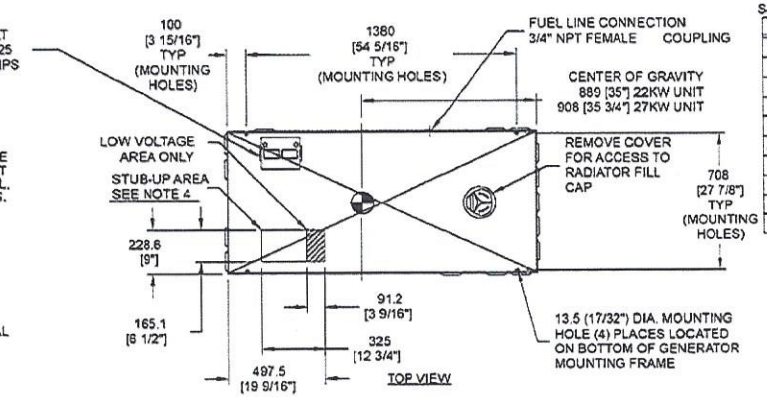

SERVICE ITEM ACCESSIBILITY CHART

SERVICE ITEM	ACCESS
OIL FILL CAP	THRU RIGHT DOOR
OIL DIP STICK	THRU RIGHT DOOR
OIL FILTER	THRU RIGHT DOOR
OIL DRAIN HOSE	THRU LEFT DOOR
RADIATOR DRAIN HOSE	THRU LEFT DOOR
AIR CLEANER ELEMENT	THRU LEFT DOOR
SPARK PLUGS	THRU LEFT DOOR
MUFFLERS	SEE NOTE 6
FAN BELT	THRU RIGHT DOOR
BATTERY	THRU LEFT DOOR

REFERENCE OWNERS MANUAL
FOR PERIODIC REPLACEMENT
PART LISTINGS

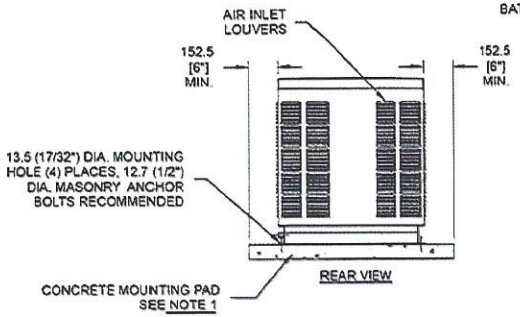

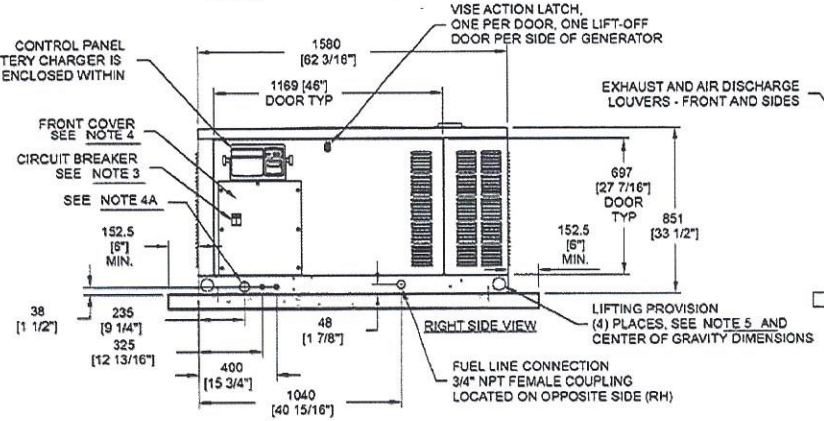

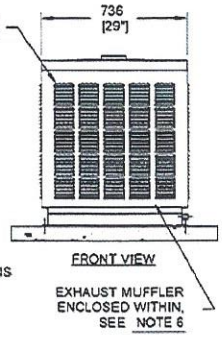

WEIGHT DATA

ENGINE/KW	ENCLOSURE MATERIAL	WEIGHT (GENSET ONLY) KG [LBS]	WEIGHT (SHIPPING CARTON/SKID) KG [LBS]	SHIPPING WEIGHT (GENSET AND CARTON) KG [LBS]
24L/22KW	ALUMINUM	393 [867]	30 [66]	423 [933]
24L/27KW	ALUMINUM	405 [893]		434 [957]

36 kW

installation layout

WEIGHT DATA			
ENCLOSURE MATERIAL	WEIGHT (GENSET ONLY) KG [LBS]	WEIGHT (WOODEN SHIPPING CRATE/SKID) KG [LBS]	SHIPPING WEIGHT (SKID AND GENSET) KG [LBS]
ALUMINUM	577 [1271]	44 [98]	621 [1369]

NOTES:

1) MINIMUM RECOMMENDED CONCRETE PAD SIZE: 1155 [45 1/2"] WIDE X 2255 [88 7/8"] LONG. REFERENCE INSTALLATION GUIDE SUPPLIED WITH UNIT FOR CONCRETE PAD GUIDELINES.
2) ALLOW SUFFICIENT ROOM ON ALL SIDES OF THE GENERATOR FOR MAINTENANCE AND SERVICING. THIS UNIT MUST BE INSTALLED IN ACCORDANCE WITH CURRENT APPLICABLE NFPA 37 AND NFPA 70 STANDARDS AS WELL AS ANY OTHER FEDERAL, STATE AND LOCAL CODES FOR MINIMUM DISTANCES FROM OTHER STRUCTURES.
3) CIRCUIT BREAKER INFORMATION: SEE SPECIFICATION SHEET WITHIN OWNERS MANUAL.
4) INSIDE STUB-UP AREA FOR AC LOAD LEAD CONDUIT CONNECTION, NEUTRAL CONNECTION, BATTERY CHARGER 120 VOLT AC (5 AMP MAX.) CONNECTION, AND ACCESS TO TRANSFER SWITCH CONTROL WIRES. REMOVE FRONT COVER FOR ACCESS.
4A) FIELD CUT HOLE IS ONLY REQUIRED FOR MOUNTING OF GENERATOR ON AN EXISTING PAD.
5) REFERENCE OWNERS MANUAL FOR LIFTING WARNINGS.
6) REMOVE EITHER LEFT OR RIGHT HAND SIDE PANEL TO ACCESS EXHAUST MUFFLER AND FAN BELT.

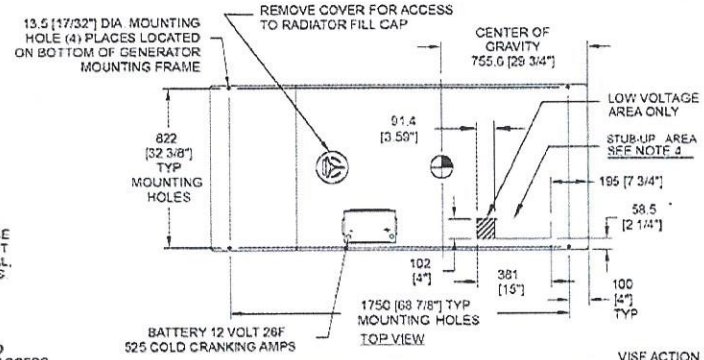

SERVICE ITEM ACCESSIBILITY CHART

SERVICE ITEM	2.4L
OIL FILL CAP	EITHER DOOR
OIL DIP STICK	THRU RIGHT DOOR
OIL FILTER	THRU RIGHT DOOR
OIL DRAIN HOSE	THRU RIGHT DOOR
RADIATOR DRAIN HOSE	THRU LEFT DOOR
AIR CLEANER ELEMENT	THRU RIGHT DOOR
SPARK PLUGS	THRU LEFT DOOR
MUFFLER	SEE NOTE 6
FAN BELT	SEE NOTE 6
BATTERY	THRU LEFT DOOR

REFERENCE OWNERS MANUAL FOR PERIODIC REPLACEMENT PART LISTINGS

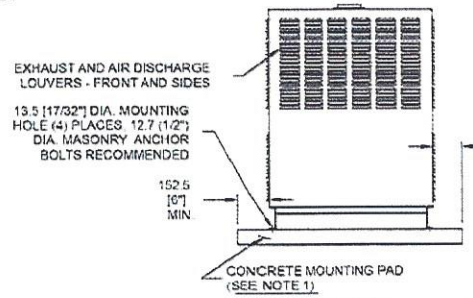

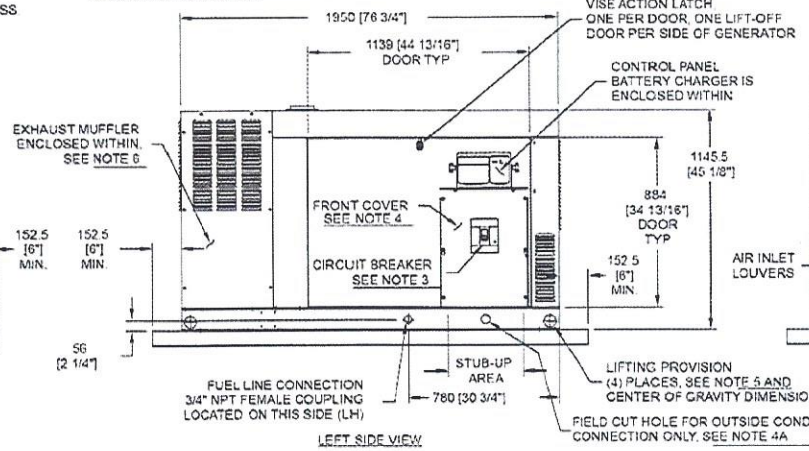

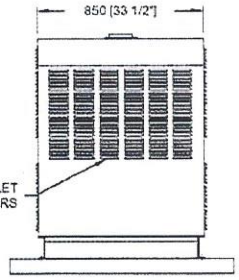

GENERAC®

48 kW

installation layout

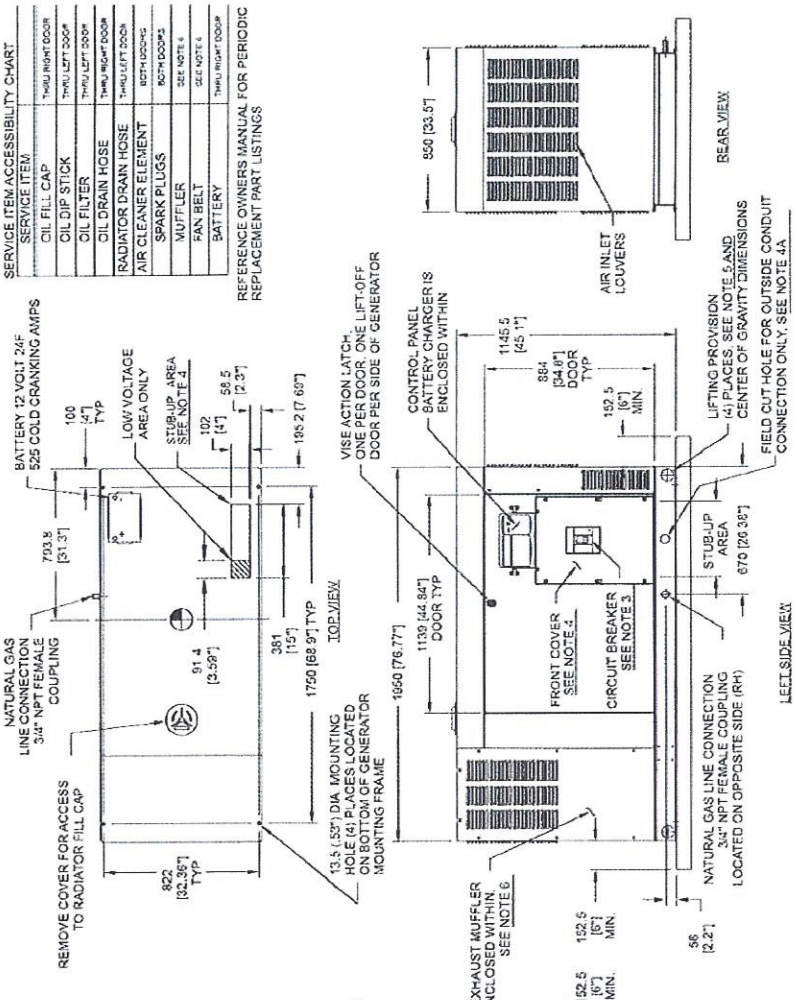

WEIGHT DATA		
WEIGHT (GENSET ONLY) KG [LBS]	WEIGHT* (WOODEN SHIPPING CRATE/SKID) KG [LBS]	SHIPPING WEIGHT (SKID AND GENSET) KG [LBS]
688 [1516]	44 [98]	732 [1614]

NOTES:

1) MINIMUM RECOMMENDED CONCRETE PAD SIZE 1155 (45.5") WIDE X 2255 (88.8") LONG. REFERENCE INSTALLATION GUIDE SUPPLIED WITH UNIT FOR CONCRETE PAD GUIDELINES.

2) ALLOW SUFFICIENT ROOM ON ALL SIDES OF THE GENERATOR FOR MAINTENANCE AND SERVICING. THIS UNIT MUST BE INSTALLED IN ACCORDANCE WITH CURRENT APPLICABLE NFPA 37 AND NFPA 70 STANDARDS AS WELLAS ANY OTHER FEDERAL, STATE AND LOCAL CODES FOR MINIMUM DISTANCES FROM OTHER STRUCTURES.

3) CIRCUIT BREAKER INFORMATION: SEE SPECIFICATION SHEET WITHIN OWNERS MANUAL

4) INSIDE STUB-UP AREA FOR AC LOAD LEAD CONDUIT CONNECTION, NEUTRAL CONNECTION, BATTERY CHARGER 120 VOLT AC (.5 AMP MAX) CONNECTION, AND ACCESS TO TRANSFER SWITCH CONTROL WIRES. REMOVE FRONT COVER FOR ACCESS.

4A) FIELD CUT HOLE IS ONLY REQUIRED FOR MOUNTING OF GENERATOR ON AN EXISTING PAD.

5) REFERENCE OWNERS MANUAL FOR LIFTING WARNINGS.

6) REMOVE EITHER LEFT OR RIGHT HAND SIDE PANEL TO ACCESS EXHAUST MUFFLER AND FAN BELT

©2013 Generac Power Systems, Inc. All rights reserved. All specifications are subject to change without notice. Bulletin 0199360SBY-C Printed in U.S.A. 11/20/13

	UNITED STATES ENVIRONMENTAL PROTECTION AGENCY **2015 MODEL YEAR** **CERTIFICATE OF CONFORMITY** **WITH THE CLEAN AIR ACT**	**OFFICE OF TRANSPORTATION** **AND AIR QUALITY** **ANN ARBOR, MICHIGAN 48105**

Certificate Issued To: Generac Power Systems, Inc. (U.S. Manufacturer or Importer) **Certificate Number: FGNXB02.42NN-005**	**Effective Date:** **11/12/2014** **Expiration Date:** **12/31/2015**	**Byron J. Bunker, Division Director** **Compliance Division**	**Issue Date:** **11/12/2014** **Revision Date:** **N/A**

Manufacturer: Generac Power Systems, Inc.
Engine Family: FGNXB02.42NN
Certification Type: Stationary (Part 60)
Fuel : Natural Gas (CNG/LNG)
Emission Standards : HC + NOx (g/kW-hr) : 13.4
NMHC + NOx (g/kW-hr) : 13.4
CO (g/kW-hr) : 519
Emergency Use Only : Y

Pursuant to Section 213 of the Clean Air Act (42 U.S.C. section 7547) and 40 CFR Part 60, 1065, 1068, and 60 (stationary only and combined stationary and mobile) and subject to the terms and conditions prescribed in those provisions, this certificate of conformity is hereby issued with respect to the test engines which have been found to conform to applicable requirements and which represent the following nonroad engines, by engine family, more fully described in the documentation required by 40 CFR Part 60 and produced in the stated model year.

This certificate of conformity covers only those new nonroad spark-ignition engines which conform in all material respects to the design specifications that applied to those engines described in the documentation required by 40 CFR Part 60 and which are produced during the model year stated on this certificate of the said manufacturer, as defined in 40 CFR Part 60. This certificate of conformity does not cover nonroad engines imported prior to the effective date of the certificate.

It is a term of this certificate that the manufacturer shall consent to all inspections described in 40 CFR 1068.20 and authorized in a warrant or court order. Failure to comply with the requirements of such a warrant or court order may lead to revocation or suspension of this certificate for reasons specified in 40 CFR Part 60. It is also a term of this certificate that this certificate may be revoked or suspended or rendered void *ab initio* for other reasons specified in 40 CFR Part 60.

This certificate does not cover large nonroad engines sold, offered for sale, or introduced, or delivered for introduction, into commerce in the U.S. prior to the effective date of the certificate.

Appendix B

Previous Review for Similar Unit

west virginia department of environmental protection

Division of Air Quality
601 57th Street SE
Charleston, WV 25304
Phone (304) 926-0475 • FAX: (304) 926-0479

Earl Ray Tomblin, Governor
Randy C. Huffman, Cabinet Secretary
www.dep.wv.gov

December 16, 2013

Jeffrey Barger
P.O. Box 2450
Clarksburg, WV 26302-2450

Re: Withdrawal of Permit Application
Dominion Transmission, Inc.
Racket Newberne M&R Facility
Cox Mills, Gilmer County, WV
Permit Application G60-C055
Plant ID No.: 021-00021

Dear Mr. Jeffrey Barger:

In accordance with your letter received on November 21, 2013, this Division hereby acknowledges the withdrawal of your company's application for a G60-C General Permit Registration for a Kohler 20 RESA, 27 bhp emergency generator/engine to be located at your Racket Newberne M&R Facility located near Cox Mills, Gilmer County, WV.

A permit registration was not needed for the generator engine because the generator was not deemed to be a stationary source and there are no substantive requirements. Although 40 CFR 60 Subpart JJJJ does apply, no performance tests are required. Dominion is aware that it must maintain maintenance records, a copy of the engine certification and fulfill any other applicable requirement(s) of Subpart JJJJ.

No further action will be taken by this Division regarding the G60-C General Permit Registration proposed in application G60-C055.

Sincerely,

John A. Benedict
Director, Division of Air Quality

JAB/jcl
cc: John Legg
Permit Writer

Meghann Quinn, Dominion Transmission, Inc.

Promoting a healthy environment.