CLASS I ADMINISTRATIVE UPDATE
REACTOR REPLACEMENT R13-2098B
PARKERSBURG FACILITY
WOOD COUNTY, WEST VIRGINIA

Prepared for:

Tetra Technologies, Inc.
401 Buckeye Street
Parkersburg, West Virginia 26101

Prepared by:

Potesta & Associates, Inc.
7012 MacCorkle Avenue, S.E.
Charleston, West Virginia 25304
Phone: (304) 342-1400 Fax: (304) 343-9031
Email: potesta@potesta.com

Project No. 0101-13-0548-010

March 2016

POTESTA

TABLE OF CONTENTS

General Applicant Information ..... SECTION I - III

Business Certificate ..... ATTACHMENT A

Area Map ..... ATTACHMENT B

Installation and Start Up Schedule ..... ATTACHMENT C

Regulatory Discussion ..... ATTACHMENT D

Plot Plan ..... ATTACHMENT E

Detailed Process Flow Diagram ..... ATTACHMENT F

Process Description ..... ATTACHMENT G

Material Safety Data Sheets ..... ATTACHMENT H

Emission Units Table ..... ATTACHMENT I

Emission Points Data Summary Sheet ..... ATTACHMENT J

Emissions Unit Data Sheets ..... ATTACHMENT L

Supporting Emissions Calculations ..... ATTACHMENT N

Monitoring/Recordkeeping/Reporting/Testing Plans ..... ATTACHMENT O

Authority Form ..... ATTACHMENT R

Attachments Not Applicable to this Application: Attachments K, M, P, Q, and S.

SECTION I - III

GENERAL APPLICANT INFORMATION

WEST VIRGINIA DEPARTMENT OF ENVIRONMENTAL PROTECTION

DIVISION OF AIR QUALITY

601 57th Street, SE
Charleston, WV 25304
(304) 926-0475
www.dep.wv.gov/daq

APPLICATION FOR NSR PERMIT AND TITLE V PERMIT REVISION (OPTIONAL)

PLEASE CHECK ALL THAT APPLY TO **NSR (45CSR13)** (IF KNOWN):

☐ **CONSTRUCTION** ☐ **MODIFICATION** ☐ **RELOCATION**
☒ **CLASS I ADMINISTRATIVE UPDATE** ☐ **TEMPORARY**
☐ **CLASS II ADMINISTRATIVE UPDATE** ☐ **AFTER-THE-FACT**

PLEASE CHECK TYPE OF **45CSR30 (TITLE V)** REVISION (IF ANY):

☐ **ADMINISTRATIVE AMENDMENT** ☐ **MINOR MODIFICATION**
☐ **SIGNIFICANT MODIFICATION**

IF ANY BOX ABOVE IS CHECKED, INCLUDE TITLE V REVISION INFORMATION AS **ATTACHMENT S** TO THIS APPLICATION

FOR TITLE V FACILITIES ONLY: Please refer to "Title V Revision Guidance" in order to determine your Title V Revision options (Appendix A, "Title V Permit Revision Flowchart") and ability to operate with the changes requested in this Permit Application.

Section I. General

1. Name of applicant *(as registered with the WV Secretary of State's Office):*
Tetra Technologies, Inc.

2. Federal Employer ID No. ***(FEIN):***
74-2148293

3. Name of facility *(if different from above):*
Parkersburg Facility

4. The applicant is the:
☐ **OWNER** ☐ **OPERATOR** ☒ **BOTH**

5A. Applicant's mailing address:
401 Buckeye Street
Parkersburg, West Virginia 26101

5B. Facility's present physical address:
401 Buckeye Street
Parkersburg, West Virginia 26101

6. **West Virginia Business Registration.** Is the applicant a resident of the State of West Virginia? ☒ **YES** ☐ **NO**

➪ If **YES,** provide a copy of the **Certificate of Incorporation/Organization/Limited Partnership** (one page) including any name change amendments or other Business Registration Certificate as **Attachment A.**

➪ If **NO,** provide a copy of the **Certificate of Authority/Authority of L.L.C./Registration** (one page) including any name change amendments or other Business Certificate as **Attachment A.**

7. If applicant is a subsidiary corporation, please provide the name of parent corporation: NA

8. Does the applicant own, lease, have an option to buy or otherwise have control of the *proposed site?* ☒ **YES** ☐ **NO**

➪ If **YES,** please explain: Applicant owns the site.

➪ If **NO,** you are not eligible for a permit for this source.

9. Type of plant or facility (stationary source) to be **constructed, modified, relocated, administratively updated** or **temporarily permitted** (e.g., coal preparation plant, primary crusher, etc.): Liquid Calcium Chloride Production Plant

10. North American Industry Classification System **(NAICS)** code for the facility:
325199

11A. DAQ Plant ID No. (for existing facilities only):
03-54-107-0113

11B. List all current 45CSR13 and 45CSR30 (Title V) permit numbers associated with this process (for existing facilities only):
R13-2098B

All of the required forms and additional information can be found under the Permitting Section of DAQ's website, or requested by phone.

12A.

- For **Modifications, Administrative Updates** or **Temporary permits** at an existing facility, please provide directions to the *present location* of the facility from the nearest state road;
- For **Construction** or **Relocation permits,** please provide directions to the *proposed new site location* from the nearest state road. Include a **MAP** as **Attachment B**.

Travel north on I-77 from Charleston to the Camden Avenue exit at Parkersburg. Take Camden Avenue into town and turn right onto Buckeye Street.

12.B. New site address (if applicable):	12C. Nearest city or town:	12D. County:
NA	Parkersburg	Wood
12.E. UTM Northing (KM): 4,345.307	12F. UTM Easting (KM): 453.678	12G. UTM Zone: 17

13. Briefly describe the proposed change(s) at the facility:
Replacement of the existing reactor (10-RX-01) with two smaller reactors (10-RX-02 and 10-RX-03).

14A. Provide the date of anticipated installation or change: 04/11/2016 ➪ If this is an **After-The-Fact** permit application, provide the date upon which the proposed change did happen: / /	14B. Date of anticipated Start-Up if a permit is granted: 04/25/2016

14C. Provide a **Schedule** of the planned **Installation** of/**Change** to and **Start-Up** of each of the units proposed in this permit application as **Attachment C** (if more than one unit is involved).

15. Provide maximum projected **Operating Schedule** of activity/activities outlined in this application:
Hours Per Day 24 Days Per Week 7 Weeks Per Year 52

16. Is demolition or physical renovation at an existing facility involved? ☒ **YES** ☐ **NO**

17. **Risk Management Plans.** If this facility is subject to 112(r) of the 1990 CAAA, or will become subject due to proposed changes (for applicability help see www.epa.gov/ceppo), submit your **Risk Management Plan (RMP)** to U. S. EPA Region III.

18. **Regulatory Discussion.** List all Federal and State air pollution control regulations that you believe are applicable to the proposed process *(if known)*. A list of possible applicable requirements is also included in Attachment S of this application (Title V Permit Revision Information). Discuss applicability and proposed demonstration(s) of compliance *(if known)*. Provide this information as **Attachment D.**

Section II. Additional attachments and supporting documents.

19. Include a check payable to WVDEP – Division of Air Quality with the appropriate **application fee** (per 45CSR22 and 45CSR13).

20. Include a **Table of Contents** as the first page of your application package.

21. Provide a **Plot Plan,** e.g. scaled map(s) and/or sketch(es) showing the location of the property on which the stationary source(s) is or is to be located as **Attachment E** (Refer to ***Plot Plan Guidance***) .
➪ Indicate the location of the nearest occupied structure (e.g. church, school, business, residence).

22. Provide a **Detailed Process Flow Diagram(s)** showing each proposed or modified emissions unit, emission point and control device as **Attachment F.**

23. Provide a **Process Description** as **Attachment G.**
➪ Also describe and quantify to the extent possible all changes made to the facility since the last permit review (if applicable).

All of the required forms and additional information can be found under the Permitting Section of DAQ's website, or requested by phone.

24. Provide **Material Safety Data Sheets (MSDS)** for all materials processed, used or produced as **Attachment H.**

➪ For chemical processes, provide a MSDS for each compound emitted to the air.

25. Fill out the **Emission Units Table** and provide it as **Attachment I.**

26. Fill out the **Emission Points Data Summary Sheet (Table 1 and Table 2)** and provide it as **Attachment J.**

27. Fill out the **Fugitive Emissions Data Summary Sheet** and provide it as **Attachment K.**

28. Check all applicable **Emissions Unit Data Sheets** listed below:

☐ Bulk Liquid Transfer Operations
☒ Chemical Processes (Reactor Sheet Only)
☐ Concrete Batch Plant
☐ Grey Iron and Steel Foundry
☐ General Emission Unit, specify
☐ Haul Road Emissions
☐ Hot Mix Asphalt Plant
☐ Incinerator
☐ Indirect Heat Exchanger
☐ Quarry
☐ Solid Materials Sizing, Handling and Storage Facilities
☐ Storage Tanks

Fill out and provide the **Emissions Unit Data Sheet(s)** as **Attachment L.**

29. Check all applicable **Air Pollution Control Device Sheets** listed below: NA

☐ Absorption Systems
☐ Adsorption Systems
☐ Afterburner
☐ Baghouse
☐ Condenser
☐ Electrostatic Precipitator
☐ Flare
☐ Mechanical Collector
☐ Wet Collecting System
☐ Other Collectors, specify

Fill out and provide the **Air Pollution Control Device Sheet(s)** as **Attachment M.**

30. Provide all **Supporting Emissions Calculations** as **Attachment N,** or attach the calculations directly to the forms listed in Items 28 through 31.

31. **Monitoring, Recordkeeping, Reporting and Testing Plans.** Attach proposed monitoring, recordkeeping, reporting and testing plans in order to demonstrate compliance with the proposed emissions limits and operating parameters in this permit application. Provide this information as **Attachment O.**

➢ Please be aware that all permits must be practically enforceable whether or not the applicant chooses to propose such measures. Additionally, the DAQ may not be able to accept all measures proposed by the applicant. If none of these plans are proposed by the applicant, DAQ will develop such plans and include them in the permit.

32. **Public Notice.** At the time that the application is submitted, place a **Class I Legal Advertisement** in a newspaper of general circulation in the area where the source is or will be located (See 45CSR§13-8.3 through 45CSR§13-8.5 and ***Example Legal Advertisement*** for details). Please submit the **Affidavit of Publication** as **Attachment P** immediately upon receipt.

33. **Business Confidentiality Claims.** Does this application include confidential information (per 45CSR31)?

☐ **YES** ☒ **NO**

➢ If **YES,** identify each segment of information on each page that is submitted as confidential and provide justification for each segment claimed confidential, including the criteria under 45CSR§31-4.1, and in accordance with the DAQ's ***"Precautionary Notice – Claims of Confidentiality"*** guidance found in the ***General Instructions*** as **Attachment Q.**

Section III. Certification of Information

34. **Authority/Delegation of Authority.** Only required when someone other than the responsible official signs the application. Check applicable **Authority Form** below:

☒ Authority of Corporation or Other Business Entity
☐ Authority of Governmental Agency
☐ Authority of Partnership
☐ Authority of Limited Partnership

Submit completed and signed **Authority Form** as **Attachment R.**

All of the required forms and additional information can be found under the Permitting Section of DAQ's website, or requested by phone.

35A. **Certification of Information.** To certify this permit application, a Responsible Official (per 45CSR§13-2.22 and 45CSR§30-2.28) or Authorized Representative shall check the appropriate box and sign below.

Certification of Truth, Accuracy, and Completeness

I, the undersigned ☐ **Responsible Official** / ☒ **Authorized Representative,** hereby certify that all information contained in this application and any supporting documents appended hereto, is true, accurate, and complete based on information and belief after reasonable inquiry I further agree to assume responsibility for the construction, modification and/or relocation and operation of the stationary source described herein in accordance with this application and any amendments thereto, as well as the Department of Environmental Protection, Division of Air Quality permit issued in accordance with this application, along with all applicable rules and regulations of the West Virginia Division of Air Quality and W.Va. Code § 22-5-1 et seq. (State Air Pollution Control Act). If the business or agency changes its Responsible Official or Authorized Representative, the Director of the Division of Air Quality will be notified in writing within 30 days of the official change.

Compliance Certification

Except for requirements identified in the Title V Application for which compliance is not achieved, I, the undersigned hereby certify that, based on information and belief formed after reasonable inquiry, all air contaminant sources identified in this application are in compliance with all applicable requirements.

SIGNATURE _____ DATE: March 11, 2016

(Please use blue ink) *(Please use blue ink)*

35B. Printed name of signee: Greg McKnight		35C. Title: Director of Manufacturing
35D. E-mail: gmcknight@tetratec.com	36E. Phone: (281) 367-1983	36F. FAX: Use email
36A. Printed name of contact person (if different from above): Rob Cline		36B. Title: Plant Manager
36C. E-mail: rcline@tetratec.com	36D. Phone: (304) 428-5811	36E. FAX: Use email

PLEASE CHECK ALL APPLICABLE ATTACHMENTS INCLUDED WITH THIS PERMIT APPLICATION:

- ☒ **Attachment A: Business Certificate**
- ☒ **Attachment B: Map(s)**
- ☒ **Attachment C: Installation and Start Up Schedule**
- ☒ **Attachment D: Regulatory Discussion**
- ☒ **Attachment E: Plot Plan**
- ☒ **Attachment F: Detailed Process Flow Diagram(s)**
- ☒ **Attachment G: Process Description**
- ☒ **Attachment H: Material Safety Data Sheets (MSDS)**
- ☒ **Attachment I: Emission Units Table**
- ☒ **Attachment J: Emission Points Data Summary Sheet**
- ☐ **Attachment K: Fugitive Emissions Data Summary Sheet**
- ☒ **Attachment L: Emissions Unit Data Sheet(s)**
- ☐ **Attachment M: Air Pollution Control Device Sheet(s)**
- ☒ **Attachment N: Supporting Emissions Calculations**
- ☒ **Attachment O: Monitoring/Reco**

ATTACHMENT A

BUSINESS CERTIFICATE

WEST VIRGINIA
STATE TAX DEPARTMENT
BUSINESS REGISTRATION CERTIFICATE

ISSUED TO:
TETRA TECHNOLOGIES INC
401 BUCKEYE ST
PARKERSBURG, WV 26101-5731

BUSINESS REGISTRATION ACCOUNT NUMBER: **1051-0673**

This certificate is issued on: 06/15/2011

This certificate is issued by
the West Virginia State Tax Commissioner
in accordance with Chapter 11, Article 12, of the West Virginia Code

The person or organization identified on this certificate is registered
to conduct business in the State of West Virginia at the location above.

This certificate is not transferrable and must be displayed at the location for which issued

This certificate shall be permanent until cessation of the business for which the certificate of registration was granted or until it is suspended, revoked or cancelled by the Tax Commissioner.

Change in name or change of location shall be considered a cessation of the business and a new certificate shall be required.

TRAVELING/STREET VENDORS: Must carry a copy of this certificate in every vehicle operated by them.
CONTRACTORS, DRILLING OPERATORS, TIMBER/LOGGING OPERATIONS: Must have a copy of this certificate displayed at every job site within West Virginia.

atL006 v.4
L0103668864

ATTACHMENT B

AREA MAP

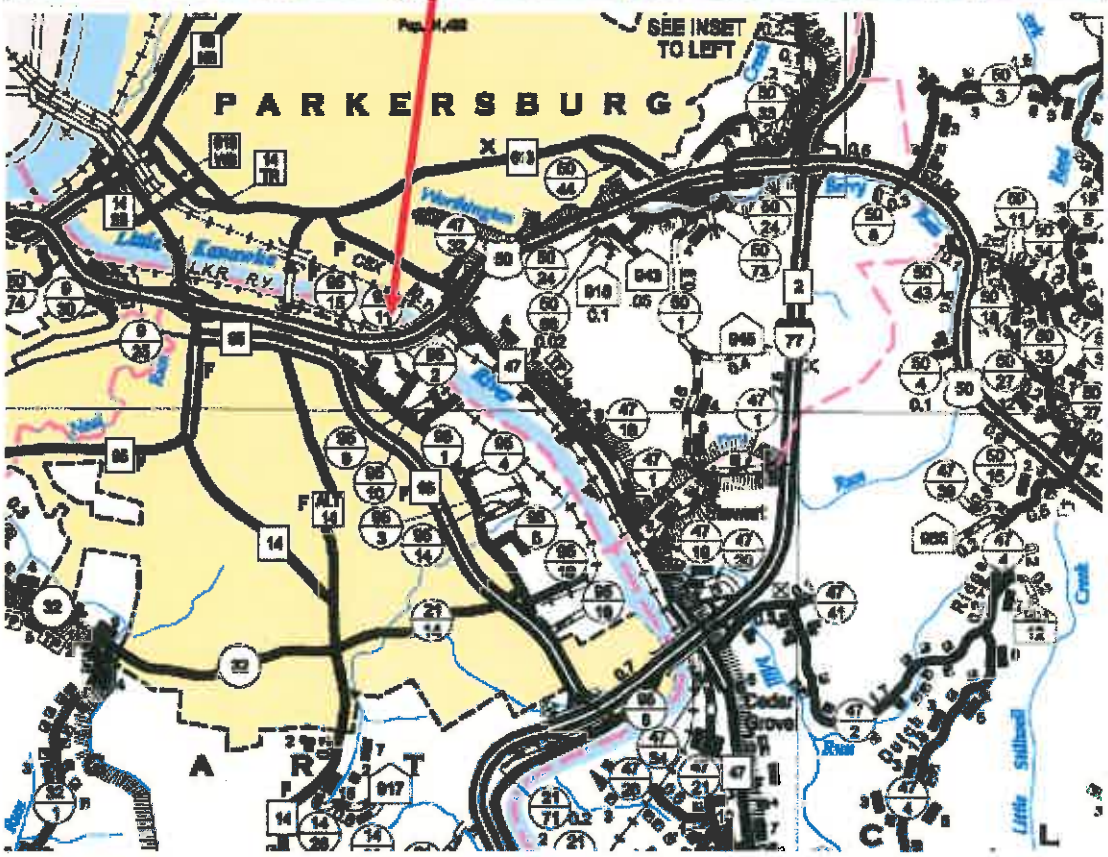

POTESTA
Engineering and Environmental Consultants
7012 MacCorkle Avenue, S.E
Charleston, West Virginia 25304
Phone: (304) 342-1400
Fax: (304) 343-9031

Area Map
Parkersburg Facility
Tetra Technologies, Inc.
Wood County, West Virginia

ATTACHMENT C

INSTALLATION AND START UP SCHEDULE

ATTACHMENT C

INSTALLATION AND STARTUP SCHEDULE

Tetra Technologies, Inc. will install the replacement reactors during April 2016. Installation of the replacement reactors is planned to commence on April 11, 2016 and should take no more than two weeks. Startup will occur immediately thereafter.

ATTACHMENT D

REGULATORY DISCUSSION

ATTACHMENT D

REGULATORY DISCUSSION

The replacement of the reactor does not change the regulatory applicability of this site.

ATTACHMENT E

PLOT PLAN

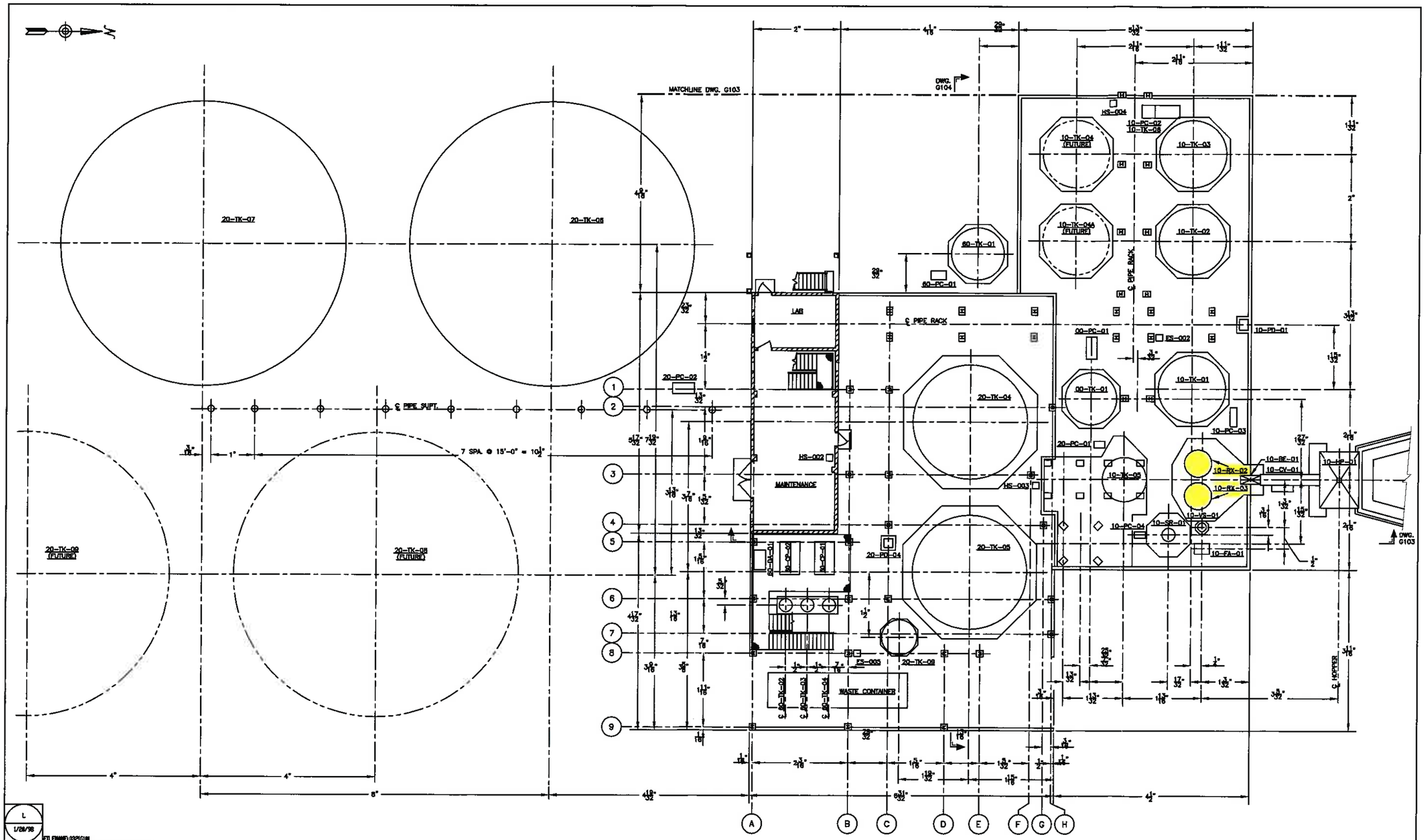

L 1/20/98 FILENAME 0321G101

NO.	REVISIONS	BY	DATE	APP'D	NO.	REVISIONS	BY	DATE	APP'D
0	RELEASED FOR CONSTRUCTION	S.F.	1/20/98	N.P.K.					

SCALE 1"=10'-0"
APP'D
DATE
DESIGNED
DRAFTED CALDART
CHECKED

PROPRIETARY & CONFIDENTIAL

This drawing, any copies of this drawing and all information contained on this drawing is and shall remain the property of TETRA TECHNOLOGIES INC. It is submitted only in connection with the transaction to which it pertains and must not be used or distributed for any purpose other than to accomplish the purpose of said transaction without the expressed written approval of TETRA TECHNOLOGIES INC. This drawing and/or any copy of this drawing is not to be copied. This drawing or any copy of this drawing must be returned to TETRA TECHNOLOGIES INC. upon request.
Copyright © TETRA TECHNOLOGIES, INC. 1998

TETRA TECHNOLOGIES
PARKERSBURG, WV
LIQUID CALCIUM CHLORIDE PLANT
GENERAL ARRANGEMENT
PLAN AT ELEVATION 598'-0"

TETRA TECHNOLOGIES, INC.

TETRA

CONTRACT NO. 20321

DRAWING NO. G101

REV. 0

Jan 21, 1998 - 10:14 am

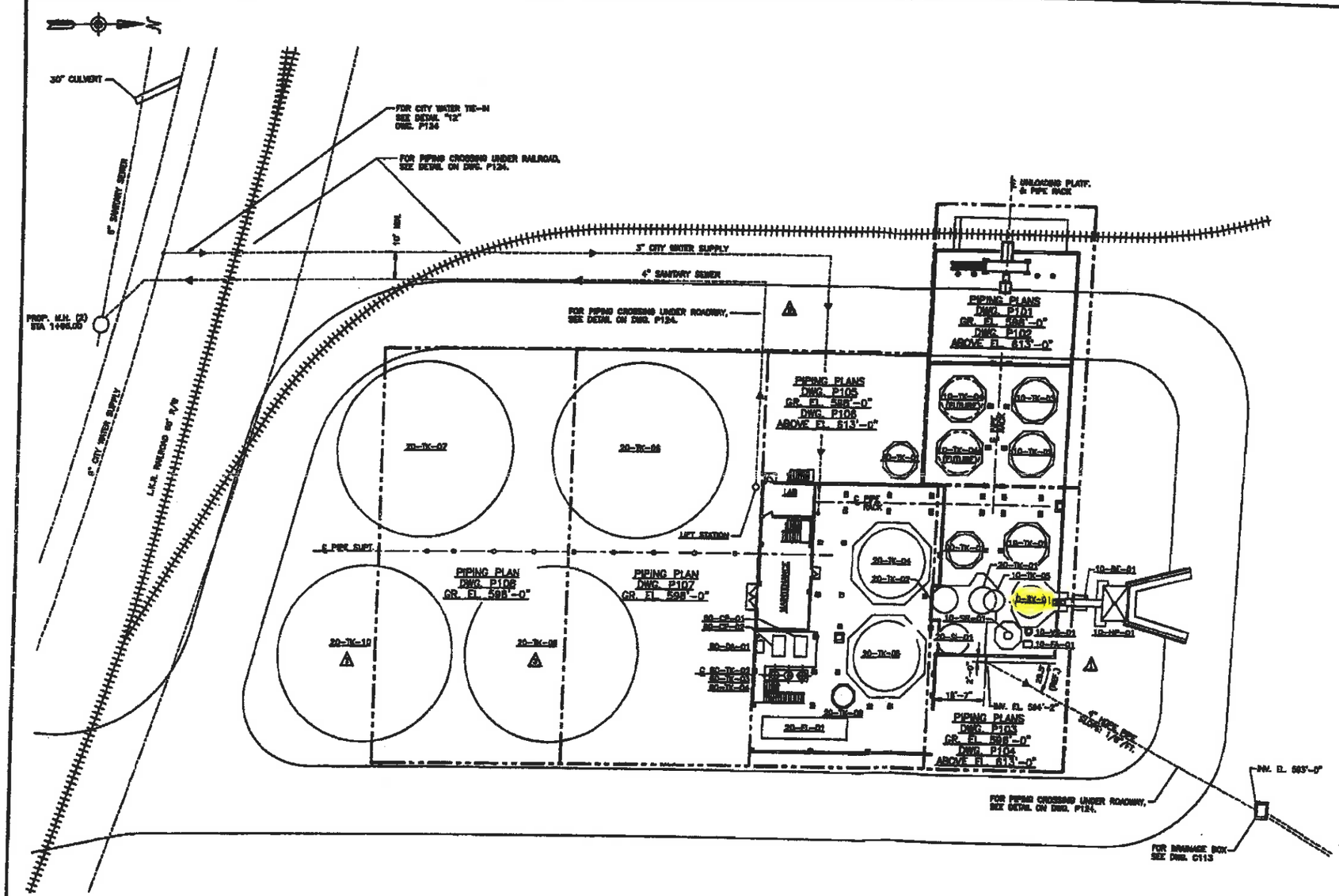

PIPING KEY PLAN
LIQUID CALCIUM CHLORIDE PLANT

PIPING DRAWING INDEX

DWG. No.	DRAWING TITLE
P100	PIPING KEY PLAN
P101	PIPING PLAN – GR. EL. 598'-0"
P102	PIPING PLAN – ABOVE EL. 613'-0"
P103	PIPING PLAN – GR. EL. 598'-0"
P104	PIPING PLAN – ABOVE EL. 613'-0"
P105	PIPING PLAN – GR. EL. 598'-0"
P106	PIPING PLAN – ABOVE EL. 613'-0"
P107	PIPING PLAN – GR. EL. 598'-0"
P108	PIPING PLAN – GR. EL. 598'-0"
P109	PIPING SECTIONS "A-A" & "B-B"
P110	PIPING SECTIONS "A-A" & "B-B"
P111	PIPING SECTION "D-C"
P112	PIPING SECTIONS "D-D", "E-E", "F-F" & "G-G"
P113	PIPING SECTION "H-H"
P114	PIPING SECTION "I-I"
P115	PIPING SECTIONS "D-D" & "H-H"
P116	PIPING SECTION "J-J"
P117	PIPING SECTION "R-R"
P118	PIPING SECTIONS "K-K" & "L-L"
P119	PIPING SECTIONS "M-M", "AA-AA", & "AB-AB"
P120	PIPING SECTION "D-D" & "AC-AC"
P121	PIPING SECTION "L-L"
P122	PIPING SECTION "V-V"
P123	PIPING SECTIONS "D-D" & "N-N" & "W-W"
P124	PIPING SECTION "T-T" & MISC. DETAILS
P125	PIPING SECTION "Y-Y"
P126	PIPING SECTION "Z-Z"
P127	PIPING DETAILS
P128	PIPE SUPPORT DETAILS
P129	PIPE SUPPORT DETAILS
P130	PLUMBING ISOMETRIC
P131	PIPE SUPPORT DETAILS
P132	PIPE SUPPORT DETAILS
P133	PIPE SUPPORT DETAILS

REFERENCE DRAWINGS:

1) FOR GENERAL ARRANGEMENT DRAWINGS, SEE G100 SERIES.
2) FOR ARCHITECTURAL DRAWINGS, SEE A100 SERIES.
3) FOR FOUNDATIONS DRAWINGS, SEE C100 SERIES
4) FOR STRUCTURAL DRAWINGS, SEE S100 SERIES.
5) FOR HVAC DRAWINGS, SEE H100 SERIES.
6) FOR ELECTRICAL DRAWINGS, SEE later.
7) FOR P&I DIAGRAM DRAWINGS, SEE D100 SERIES.

GENERAL NOTES:

1) FOR PIPING MATERIAL AND INSTALLATION SPEC., SEE TETRA TECHNOLOGIES CONSTRUCTION SPECIFICATION No. 50391-CS-01 ATTACHMENT No. 1.
2) ALL PIPING TO BE IN ACCORDANCE WITH TETRA TECH. STANDARD SPECIFICATIONS UNLESS SPECIFICALLY NOTED ON THE DRAWING OR APPROVED BY TETRA TECH.
3) NO GASKET ALLOWANCE HAS BEEN MADE ON DRAWINGS, CONTRACTOR TO ALLOW FOR GASKETS WHEN FABRICATING.
4) UNIONS SHALL BE INSTALLED ON EACH SIDE OF SCREWED CONTROLS, SCREWED VALVES, SPECIALTY ITEMS AND AT ALL OTHER LOCATIONS WHERE REQUIRED TO FACILITATE DISMANTLING OR RE-ASSEMBLE OF EQUIPMENT.
5) THE PIPING CONTRACTOR SHALL PROVIDE ALL HIGH POINT VENTS AND LOW POINT DRAINS UNLESS SPECIFIED ON DRAWINGS.
6) PIPING PASSING THROUGH SHEETING, SANDWICH SIDING, FLEXICORE ROOFING OR GRATING IS THE PIPING CONTRACTOR'S RESPONSIBILITY TO LAY OUT, CUT, AND PROVIDE FINAL SEALING AND/OR FLASHING THROUGH THE WALL.
7) ALL UNDERGROUND PIPING TO BE COATED AND WRAPPED PER TETRA TECH. STANDARDS.
8) PIPE SUPPORTS NOT DETAILED ON DRAWINGS ARE BY PIPE CONTRACTOR.
9) ALL 2" AND UNDER CARBON STL. PIPE IS SHOWN DIAGRAMMATICALLY UNLESS OTHERWISE SHOWN ON DRAWINGS AND IS TO BE INSTALLED AND SUPPORTED BY THE PIPING CONTR. TO SUIT.
10) CONTRACTOR TO FIELD ROUTE COMPRESSED AIR AND INSTRUMENT AIR BRANCH CONN. TO VALVE ACTUATORS AND AIR-OPERATED PUMPS.
11) CONTRACTOR TO VERIFY ALL EQUIPMENT WITH CERTIFIED VENDOR DRAWINGS PRIOR TO PIPE INSTALLATION.
12) CONTRACTOR TO INSTALL ALL OWNER FURNISHED EQUIPMENT AS PER MANUFACTURER'S RECOMMENDATIONS.
13) THE CONTRACTOR SHALL INSTALL A CATHODIC PROTECTION FLANGE ISOLATION GASKET ON ALL LINES COMING FROM UNDERGROUND.
14) PROCESS WTR. LOOP PIPING TO BE INSULATED FOR HEAT CONSERVATION. ALL PROCESS WTR. BRANCH CONN. PIPING TO BE ELECTRIC HEAT TRACED & INSULATED.
15) CITY WTR. PIPING (OUTSIDE) TO BE ELECTRIC HEAT TRACED & INSULATED.

4
7/2/98

NO.	REVISIONS	BY	DATE	APP'D	NO.	REVISIONS	BY	DATE	APP'D
A	RELEASED FOR BID	STU	1/30/98						
B	RELEASED FOR CONSTRUCTION	STU	2/19/98						
1	REVISED AS NOTED	STU	3/6/98						
2	ADDED DRAWING NO.	STU	3/12/98						
3	ADDED FUTURE 20-TK-08 & 10	SS	7/17/00	NPK					

SCALE 1"=60'-0"
APP'D
DATE
DESIGNED
DRAFTED CAL DART
CHECKED SJF

TETRA TECHNOLOGIES
PARKERSBURG, WV
LIQUID CALCIUM CHLORIDE PLANT
PIPING KEY PLAN

TETRA TECHNOLOGIES, INC.
TETRA
DRAWING NO. P100
REV. 3

ATTACHMENT F

DETAILED PROCESS FLOW DIAGRAM

Simple Flow Diagram
Liquid $CaCl_2$ Process

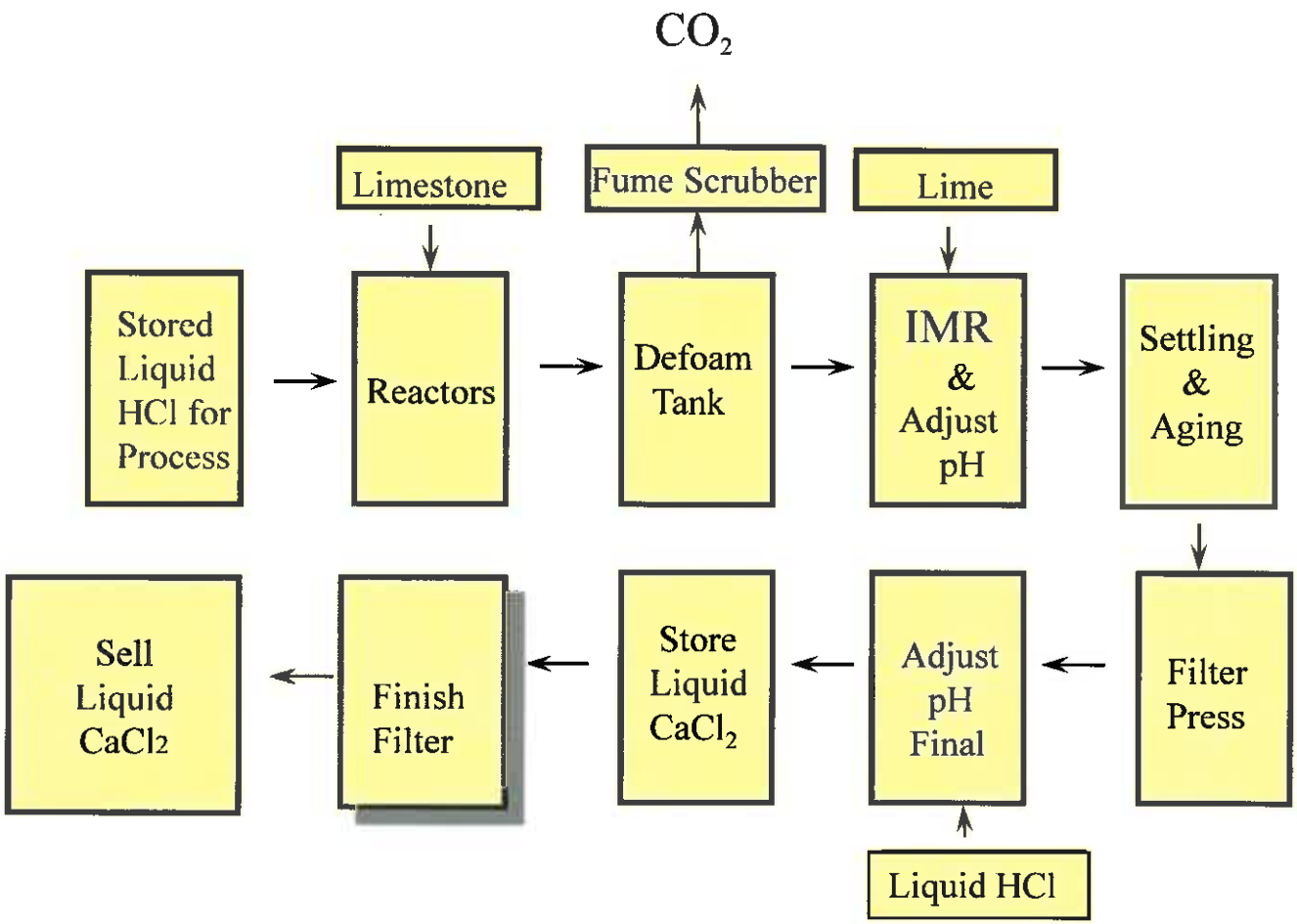

ATTACHMENT G

PROCESS DESCRIPTION

ATTACHMENT G

PROCESS DESCRIPTION

Tetra Technologies, Inc. produces calcium chloride ($CaCl_2$) at 401 Buckeye St., Parkersburg, West Virginia. The plant uses hydrochloric acid (HCl) and neutralizes it by reaction with limestone to produce calcium chloride brine ($CaCl_2$ and H_2O). This reaction occurs in the reactor(s). The reactor(s) are filled with limestone and then continuously fed limestone and HCl to produce calcium chloride brine. Calcium chloride brine will be produced as long as there is limestone in the reactor(s) and HCl is fed into the reactor(s) to react and form the brine.

During an upcoming and planned facility outage in April, the existing reactor will be removed and the two new reactors will be installed. The new reactors will be located within the same footprint as the existing reactor and fed from the existing limestone feed conveyor.

The purpose of this project is to replace the existing single 14' diameter by 30' tall reactor (10-RX-01) with two new 5'- 3" diameter by 30' tall vertical reactors (10-RX-02 and 10-RX-03). The new reactors will be constructed from High Density Polyethylene (HDPE) P-100 material. The shell thickness is 1.94" with the top and bottom plate constructed from HDPE P100, 2" thick. Design pressures for these reactors range from a -15 WC Vac. to 10 psig, the reactors operate at atmospheric pressure. Both units will have fixed roofs.

This project is designed to improve equipment and production reliability. The new reactors will be fed from the existing limestone feed conveyor/hopper and supplied hydrochloric acid from the existing pump and piping systems.

Emissions from the process will remain the same and unchanged from levels established in the current permit due to no increase in production rates. Emission from the process is carbon dioxide (CO_2). Currently, the existing reactor is vented via a scrubber (10-SR-01) with emission point VS-01. The new reactors will vent to the same scrubber. The existing scrubber will not require any modification resulting from the installation of the new reactors.

It is important to note that CO_2 is not controlled by the scrubber (10-SR-01). The scrubber controls multiple sources and the main design of the scrubber is to remove HCl mist. The amount of CO_2 produced and emitted from the reactors is based on the chemical reaction and is provided in Amendment J and estimated in Attachment N.

ATTACHMENT H

MATERIAL SAFETY DATA SHEETS

HYDROCHLORIC ACID

This MSDS complies with the style format specified by ANSI Z400 1-1993

SECTION 1: CHEMICAL PRODUCT - COMPANY IDENTIFICATION

TETRA Technologies, Inc.
25025 I-45 North
The Woodlands, Texas 77380

(281) 367-1983
(800) 327-7817

(800) 424-9300 **CHEMTREC (24-Hour Emergency Response)**
(800) 222-1222 **POISON CONTROL**

SUBSTANCE: Hydrochloric Acid
SYNONYMS: Chlorohydric acid; Hydrogen chloride; Muriatic acid
CHEMICAL FAMILY: Inorganic acid
MSDS CREATION DATE: 10 JUL 95
MSDS REVISION DATE: 19 MAY 03

SECTION 2: COMPOSITION, INFORMATION ON INGREDIENTS

COMPONENTS	CAS NUMBER	PERCENTAGE
Hydrochloric Acid	7647-01-0	8-38%
Water	7732-18-5	62-92%

SECTION 3: HAZARDS IDENTIFICATION

NFPA and HMIS RATINGS: (SCALE 0-4): HEALTH=3 FIRE=0 REACTIVITY=1
EMERGENCY OVERVIEW: Clear, colorless liquid with pungent, suffocating odor. Corrosive to eyes, skin, digestive tract. High inhalation and ingestion hazard. Avoid skin and eye contact or inhalation of vapors. May react with ordinary metals and generate highly flammable hydrogen gas. Closed containers may generate internal gas pressure (hydrogen) due to corrosion. Overpressure may rupture container. Store in a cool, dry place.
POTENTIAL HEALTH EFFECTS:
INHALATION: Vapor is a severe irritant causing coughing, discomfort and difficulty breathing. High concentrations may cause injury to lungs and may be life threatening. Excessive concentrations may cause nervous system depression, headache, and weakness leading to unconsciousness and impairment of vision.
SKIN CONTACT: Corrosive -- may cause severe skin irritation.
EYE CONTACT: Corrosive - contact with product or vapors may cause severe irritation and possible damage to the cornea and impairment of vision.
INGESTION: Corrosive to digestive tract.
CARCINOGEN STATUS:
OSHA: No **NTP:** No **IARC:** No

SECTION 4: FIRST AID MEASURES

INHALATION: Remove from exposure area to fresh air. Get medical attention.
SKIN CONTACT: Remove contaminated clothing and shoes. Immediately flush with water for at least 15 minutes. Call physician. Wash clothing before reuse.
EYE CONTACT: Flush eyes with large amounts of water for at least 20-30 minutes. Get immediate medical attention.
INGESTION: Do not induce vomiting. Get medical attention.

NOTE TO PHYSICIAN: Assess airways if inhaled and/or ingested. Provide oxygen and /or ventilation assistance if needed. If swallowed, DO NOT INDUCE VOMITING.
Assess extent and severity of tissue injury by appropriate diagnostic studies and procedures.

SECTION 5: FIRE FIGHTING MEASURES

FIRE AND EXPLOSION HAZARD: Contact with ordinary metals may generate highly flammable hydrogen gas. Released gases may accelerate the burning of other combustible materials. When mixed with air and exposed to ignition source, vapors can burn in open or explode if confined. Overpressure can also occur, rupturing closed containers.

EXTINGUISHING MEDIA: Water spray/waterfog for cooling. Waterspray for large fires. Dry chemical or CO_2 extinguisher for small fires.

FIREFIGHTING: Use water spray/fog for cooling. Use self-contained breathing apparatus and body-covering protective clothing (neoprene and butyl rubber). Heat may cause pressure build up causing rupture of closed containers. Avoid frothing/steam explosion. Avoid contact or inhalation of product/vapors.

HAZARDOUS COMBUSTION PRODUCTS: Flammable hydrogen gas by reaction with many metals. Also, chlorine gas is released by reaction with oxidizing agents.

SECTION 6: ACCIDENTAL RELEASE MEASURES AND DISPOSAL

OCCUPATIONAL SPILL:

Prevent flow into sewer/public waters. Notify fire and environmental authorities. Stop leak if you can do it without risk. Evacuate/limit access. Impound/recover large land spill. Soak up small spills with inert solids and place into non-corrodible containers for disposal. Flush/dilute with water. Neutralize collected waste before discharge.

On water, material is soluble and may float or sink. Contain/collect rapidly to minimize dispersion.

WASTE DISPOSAL:

Contaminated product/soil/water may be RCRA/OSHA hazardous waste (corrosive) based upon pH. Landfill solids at permitted sites. Use registered transports. Acidic or alkaline aqueous waste may be discharged to public waters after it has been diluted, neutralized or treated and is free of floating oil. Comply with applicable regulations.

SECTION 7: HANDLING AND STORAGE

Observe all federal, state, and local regulations when storing this liquid. Store in a tightly closed container in a cool, dry place. Avoid exposure to sunlight. Store away from incompatible substances.

SECTION 8: EXPOSURE CONTROLS, PERSONAL PROTECTION

EXPOSURE LIMITS:

ACGIH (1992)	Ceiling	5 ppm	7.5 mg/m^3
OSHA (1989) and NIOSH	Ceiling	5 ppm	7 mg/m^3

IDLH concentration is 50 ppm

RESPIRATORY: If exposure can exceed exposure limits, use a NIOSH/MSHA approved full face acid gas respirator.

EYE PROTECTION: Wear safety chemical splash goggles and face shield. Contact lenses must not be worn.

SKIN: Impervious protective suit with integral or tight-fitting gloves, boots, and full head and face protection must be worn. Recommended material: Neoprene. Equipment must be cleaned thoroughly after each use.

VENTILATION: If handling results in mist or aerosols, special ventilation may be required.
EMERGENCY WASH FACILITIES: An eye wash fountain and quick drench shower should be available within the immediate work area for emergency use.

SECTION 9: PHYSICAL AND CHEMICAL PROPERTIES

DESCRIPTION:	Clear, colorless liquid with pungent, suffocating odor
MOLECULAR WEIGHT:	36.46 for Hydrochloric Acid.
MOLECULAR FORMULA:	HCL
SPECIFIC GRAVITY:	1.179 for 35.21% HCL at 60° F
BOILING POINT:	7-20% (>212 TO 230°f) 20-38% (230 – 176°f)
FREEZING POINT:	7% (28°F) **37% (-101°F)**
VAPOR PRESSURE:	7-32% (0-23.5 mmHg) 32-38% (23.5-210 mmHg (partial pressure Hydrochloric acid)
VAPOR SPECIFIC GRAVITY:	AP 1.3 (Hydrochloric Acid)
WATER SOLUBILITY:	Complete
SOLVENT SOLUBILITY:	Miscible in glycerol
VOLATILES % BY VOLUME:	AP 100%
FLASH POINT:	Not applicable

SECTION 10: STABILITY AND REACTIVITY

REACTIVITY:	Stable under normal temperatures and pressures.
INCOMPATIBILITIES:	Alkaline materials: Aluminum; Amines; Carbonates; Iron; Sulfuric Acid, Hydroxides; Leather and other fabrics; Metal oxides; Magnesium; Oleum; Perchloric acid; Zinc
HAZARDOUS DECOMPOSITION:	Flammable hydrogen gas by reaction with many metals. Also, chlorine gas is released by reaction with oxidizing agents.
POLYMERIZATION:	Does not occur under normal temperatures and pressures.
CONDITIONS TO AVOID:	Heat, exposure to sunlight.

SECTION 11: TOXICOLOGICAL INFORMATION

No data available.

SECTION 12: ECOLOGICAL INFORMATION

No data available.

SECTION 13: DISPOSAL INFORMATION:

Observe all federal, state and local regulations when disposing of this liquid. See Section 6.

SECTION 14: TRANSPORT INFORMATION

US DOT SHIPPING NAME:	Hydrochloric acid solution, 8, UN1789 PG II
US DOT HAZARD CLASS or DIVISION:	8
US DOT IDENTIFICATION NUMBER:	UN1789
US DOT PACKING GROUP:	II
US DOT LABEL CODES:	8

REPORTABLE QUANTITY:	5000 Pounds (2,270 Kilograms) Hydrochloric acid **13,158 Pounds based on material**

This product contains a DOT Hazardous Substance or Substances. If the product's shipping container holds at least 13,158 pounds (lbs) of product as a solution reflected in this MSDS, then the DOT information must be accompanied with RQ notation, or, an otherwise "Not Regulated" product will be classified as Environmentally Hazardous (solid/liquid) n.o.s., 9, unless the product qualifies for the petroleum exemption (49 CFR 171.8).

US DOT PACKAGING (refer to):	**Exceptions:** 49 CFR § 173.154 **Non-Bulk:** 49 CFR § 173.202 **Bulk:** 49 CFR § 173.242
US DOT QUANTITY LIMITATIONS:	**Passenger Aircraft/Rail:** 1 L
Cargo Aircraft Only:	30 L

SECTION 15: REGULATORY INFORMATION

TSCA STATUS:	Yes
WHMIS CLASIFICATION:	Yes
CERCLA SECTION 103:	Yes
Hydrochloric acid (HCL)	5000 Pounds RQ
SARA SECTION 302/304	Yes
Hydrochloric acid (HCL)	500 Pounds TPQ
SARA SECTION 313:	Yes
SARA HAZARD CATEGORIES, SARA SECTIONS 311/312	
ACUTE HAZARD:	Yes
CHRONIC HAZARD:	Yes
CALIFORNIA PROPOSITION 65:	No

SECTION 16: OTHER INFORMATION

Individuals handling this product should be informed of the recommended safety precautions and should have access to this information.

This information relates to the specific product designated and may not be valid for such product used in combination with any other materials or in any other processes. Such information is to the best of our knowledge and belief, accurate and reliable as of the date compiled. However, no representation, warranty or guarantee is made as to its accuracy, reliability, or completeness. It is the users' responsibility to satisfy themselves as to the suitability and completeness of such information for their own particular use. We do not accept liability for any loss or damage that may occur from the use of this information nor do we offer warranty against patent infringement.

TETRA Technologies, Inc. reserves the right to refuse shipment of this product to any consumer who fails to demonstrate the ability to consistently handle and use it safely and in compliance with all applicable laws, rules and regulations. Such demonstration may require on-site inspection of any or all storage, processing, packaging and other handling systems that come in contact with it.

Customers are responsible for compliance with local, state and federal regulations that may be pertinent in the storage, application and disposal of this product.

Calcium Chloride Solution

1. Product and Company Identification

TETRA Technologies, Inc. 24955 Interstate 45 North The Woodlands, TX 77380	CHEMTREC (24-Hr Emergency Response):	U.S. Toll Free (800) 424-9300 International +1 703-527-3887
	Poison Control:	(800) 222-1222
	Non-emergency Customer Service:	(281) 367-1983

Synonyms:	Liquid Calcium Chloride, Road Master™, Superset™, Food Grade Liquid Calcium Chloride
Chemical Family:	Inorganic Salt
MSDS Creation Date:	01 Mar 94
MSDS Revision Date:	04/12/2010

2. Hazards Identification

HMIS Ratings: (Scale 0-4)	Health: 1 Fire: 0 Reactivity: 0
EMERGENCY OVERVIEW:	Odorless, clear to amber liquid. May cause skin, respiratory tract, and eye irritation.
Potential Health Effects	
Skin Contact:	May cause minor irritation.
Eye Contact:	May irritate or burn eyes.
Inhalation:	Mist inhalation may cause minor irritation.
Ingestion:	May irritate gastrointestinal tract and cause nausea and vomiting.

3. Composition, Information on Ingredients

CAS Number	Wt. %	Ingredient Name
10043-52-4	20-45%	Calcium Chloride

4. First Aid Measures

Skin Contact:	Remove contaminated clothing and shoes. Wash affected area with soap or mild detergent.
Eye Contact:	Flush eyes thoroughly with water. If irritation or adverse symptoms develop, seek medical attention.
Inhalation:	Remove from exposure. If breathing is difficult or irritation develops, seek medical attention.
Ingestion:	Get medical attention.
Notes to Physician:	Treat symptomatically and supportively.

5. Fire Fighting Measures

Flash Point:	Not applicable
Extinguishing Media:	Use extinguishing media appropriate for surrounding fire.
Fire Fighting:	Negligible fire hazard; not applicable.
Fire and Explosion Hazard:	Negligible
Products of Combustion:	Non-combustible

Calcium Chloride Solution

6. Accidental Release Measures

Evacuation and Safety:	Wear appropriate protective gear for the situation. See personal protection information in Section 8.
Containment of Spill:	For small spills, take up with sand or other absorbent material and place in containers for disposal. For larger spills, dike far ahead of spill for later disposal.
Cleanup and Disposal:	For small spills, take up with sand or other absorbent material and place in containers for disposal. For larger spills, dike far ahead of spill for later disposal.

7. Handling and Storage

Handling:	Avoid skin and eye contact and breathing vapors or mists. Wash thoroughly after handling. Launder contaminated clothing before reuse.
Storage:	Observe all federal, state, and local regulations when storing this product. Store in a tightly closed container away from incompatible materials. Do not store in metals which this solution corrodes.

8. Exposure Controls/Personal Protection

Engineering Controls:	Provide local exhaust ventilation system. Where there is possibility of exposure, eye wash fountain and safety shower should be provided within the immediate work area for emergency use.

Exposure Limits: ACGIH – (TLV-TWA) Guideline for nuisance particulate (liquefied mist): 10 mg/m^3

Personal Protective Equipment (PPE)	
Eyes:	Wear safety glasses with splash shields or safety goggles/shields.
Hands and Feet:	Wear appropriate non-leather protective gloves and boots.
Body:	Wear appropriate normal work clothing. Leather work boots and/or leather products will dehydrate with resultant shrinkage and possible destruction.
Respiratory:	Respirator not generally required. For misty conditions, wear NIOSH approved mist respirator.

9. Physical and Chemical Properties

Description:	Clear to amber liquid
Odor:	Odorless
Boiling Point:	118°C (244°F) for 38% solution
Melting Point:	Not available
Specific Gravity (H_2O=1):	1.376 @ 25°C (77°F) for 38% solution
pH:	3.8 – 9.0
Water Solubility:	Complete
Vapor Density (Air=1):	Not available
Vapor Pressure:	Not available
Freezing Point:	Not available
Flash Point:	Not applicable
Lower/Upper Flame Limits:	Not applicable
Auto-ignition Temperature:	Not applicable

10. Stability and Reactivity

Stability and Reactivity:	Stable under normal temperatures and pressures..
Incompatibilities:	Strong oxidizing agents.

Calcium Chloride Solution

Hazardous Decomposition:	None under normal conditions.
Polymerization:	Does not occur under normal temperatures and pressures.
Conditions to Avoid:	None.

11. Toxicological Information

Toxicity Data:	Anhydrous Calcium Chloride: TD_{LO}: 112/kg, oral, 20 weeks, rat LD_{LO}: 274 mg/kg, subcutaneous, dog LD_{50}: 1000 mg/kg, oral, rat LD_{50}: 264 mg/kg, intraperitoneal, rat See Registry of Toxic Effects of Chemical Substances (RTECS) file for mutagenic and tumorigenic data. Local Effects – Eye, mucous membrane and skin irritant Health Effects – Moderately toxic by ingestion. Slightly toxic by dermal absorption.
Carcinogen Status:	OSHA – No NTP – No IARC – No

12. Ecological Information

Product will not biodegrade or bioaccumulate.

13. Disposal Information

Observe all federal, state, and local regulations when disposing of this substance.

14. Department of Transportation (DOT) Transport Information

Shipping Name:	Not regulated
ID Number:	Not applicable
Hazard Class or Division:	Not applicable
Packing Group:	Not applicable
Labeling Requirements:	Not applicable
Packing Authorizations:	
Exceptions:	Not applicable
Non-bulk Packing:	Not applicable
Bulk Packing:	Not applicable
Quantity Limitations:	
Passenger Aircraft:	Not applicable
Cargo Aircraft Only:	Not applicable
Vessel Stowage Req.:	Not applicable
Emergency Guide Number:	Not applicable

15. Regulatory Information

OSHA Process Safety:	No
SARA Title III:	Section 311: Acute Hazard
TSCA Status:	Yes
CERCLA:	No
EINECS Status:	Yes

Calcium Chloride Solution

OSHA Process Safety:	No
California Proposition 65:	No ingredients found on the list
WHMIS Classification:	Not determined

16. Other Information

Individuals handling this product should be informed of the recommended safety precautions and should have access to this information.

This information relates to the specific product designated and may not be valid for such product used in combination with any other materials or in any other processes. Such information is to the best of our knowledge and belief, accurate and reliable as of the date compiled. However, no representation, warranty or guarantee is made as to its accuracy, reliability, or completeness. It is the users' responsibility to satisfy themselves as to the suitability and completeness of such information for their own particular use. We do not accept liability for any loss or damage that may occur from the use of this information nor do we offer warranty against patent infringement.

TETRA Technologies, Inc. reserves the right to refuse shipment of this product to any consumer who fails to demonstrate the ability to consistently handle and use it safely and in compliance with all applicable laws, rules and regulations. Such demonstration may require on-site inspection of any or all storage, processing, packaging and other handling systems that come in contact with it.

Customers are responsible for compliance with local, state and federal regulations that may be pertinent in the storage, application and disposal of this product.

Revision History

Created:	03/01/1994	
	12/20/2007	
	04/12/2010	Updated address

Martin Marietta Materials

2710 Wycliff Road
Raleigh, North Carolina 27607
919-781-4550

MATERIAL SAFETY DATA SHEET

Effective Date: 11-07
Replaces: 2-04

I – PRODUCT AND COMPANY IDENTIFICATION

CHEMICAL NAME	CHEMICAL FORMULA	MOLECULAR WEIGHT
Limestone	Mixture	Not Applicable

TRADE NAME
Crushed Stone

SYNONYMS
Aggregate, Aglime, Barn Lime, Coverstone, Fluing Agent, Flexible Base, Manufactured Sand, Mineral Filler, Screenings

DOT IDENTIFICATION NO.
None

II – COMPOSITION/INFORMATION ON INGREDIENTS

COMPONENT(S) CHEMICAL NAME	CAS REGISTRY NO	% by weight (approx)	MSHA/OSHA PEL	ACGIH TLV-TWA
Limestone	1317-65-3	80-99	(R) 10 mg/m^3/(% SiO_2+2)§	(R) $^{\#}$5 mg/m^3
Silicon Dioxide*, SiO_2	14808-60-7	0-10	(R) 10 mg/m^3/(% SiO_2+2)§	(R) 0.025 mg/m^3
Aluminum Oxide, Al_2O_3	1344-28-1	<1	(T) 15 mg/m^3, (R) 5 mg/m^3	$^{\#}$10 mg/m^3
Ferric Oxide, Fe_2O_3	1309-37-1	<1	10 mg/m^3	5 mg/m^3
Magnesium Oxide, MgO	1309-48-4	0-8	15 mg/m^3	10 mg/m^3
Calcium Oxide, CaO	1305-78-8	0-43	5 mg/m^3	2 mg/m^3
Sodium Oxide, Na_2O	1313-59-3	<1	-	2 mg/m^3 as NaOH
Potassium Oxide, K_2O	12136-45-7	<1	-	-
Calcium Carbonate, $CaCO_3$	471-34-1	40-100	(T) 15 mg/m^3, (R) 5 mg/m^3	$^{\#}$10 mg/m^3

*: The composition of SiO_2 may be up to 100% crystalline silica. (R): Respirable (T): Total §: Crystalline silica is normally measured as respirable dust. The OSHA standard also presents a formula for calculation of the PEL based on total dust: 30 mg/m^3/(% SiO_2+2). #: Particulate matter containing no asbestos and <1% crystalline silica.

III – HAZARDS IDENTIFICATION

Angular gray particles ranging in size from powder to small stones. No odor.
Silica containing respirable dust particles may be generated by handling limestone.
Inhalation of excessive particulate matter may cause respiratory problems. Crystalline silica, a component of this product, has been designated as a Group I carcinogen by IARC.

Health Effects: The information below represents an overview of health effect caused by overexposure to one or more components in limestone. The individual effects are described in Section XI.

Primary route(s) of exposure: ■ Inhalation ☐ Skin ☐ Ingestion

EYE CONTACT: Direct contact with dust may cause irritation by mechanical abrasion. Conjunctivitis may occur.

SKIN CONTACT:	Direct contact may cause irritation by mechanical abrasion. Some components of material are also known to cause mild corrosive effects to skin and mucous membranes.
SKIN ABSORPTION:	Not expected to be a significant exposure route.
INGESTION:	Small amounts (a tablespoonful) swallowed during normal handling operations are not likely to cause injury. Ingestion of large amounts may cause gastrointestinal irritation and blockage.
INHALATION:	Dusts may irritate the nose, throat, and respiratory tract by mechanical abrasion or corrosive action. Coughing, sneezing, chest pain, shortness of breath, inflammation of mucous membrane, and flu-like fever may occur following exposures in excess of appropriate exposure limits. Repeated excessive exposure may cause pneumoconiosis, such as silicosis and other respiratory effects.

Notes on Silicosis:

Use of limestone for construction purposes is not believed to cause additional acute toxic effects. Repeated overexposures to respirable crystalline silica (quartz, cristobalite, tridymite) for periods as short as 6 months has caused acute silicosis.

Chronic exposure to respirable quartz-containing dust in excess of appropriate exposure limits has caused silicosis, a progressive pneumoconiosis (lung disease). Restrictive and/or obstructive lung function changes may result form chronic exposure. Chronic tobacco smoking may further increase the risk of developing chronic lung problems.

Symptoms of acute silicosis include (but are not limited to): shortness of breath, cough, fever, weight loss, and chest pain. Acute silicosis is a rapidly progressive, incurable lung disease and is typically fatal.

MEDICAL CONDITIONS AGGRAVATED BY EXPOSURE

Inhaling respirable dust and/or crystalline silica may aggravate existing respiratory system disease(s) and/or dysfunctions. Exposure to dust may aggravate existing skin and/or eye conditions. Smoking and obstructive / restrictive lung diseases may also exacerbate the effects of excessive exposure to this product.

IV – FIRST AID MEASURES

EYES:	Immediately flush eye(s) with plenty of clean water for at least 15 minutes, while holding the eyelid(s) open. Occasionally lift the eyelid(s) to ensure thorough rinsing. Beyond flushing, do not attempt to remove material from the eye(s). Contact a physician if irritation persists or develops later.
SKIN:	Wash with soap and water. Contact a physician if irritation persists or develops later.
INGESTION:	If person is conscious, give a large quantity of water and induce vomiting; however, never attempt to make an unconscious person drink or vomit. Get medical attention.
INHALATION:	Remove to fresh air. Dust in throat and nasal passages should clear spontaneously. Contact a physician if irritation persists or develops later.

V – FIRE FIGHTING MEASURES

FLASHPOINT	FLAMMABLE LIMITS IN AIR
Not flammable	Not flammable

EXTINGUISHING AGENT

None Required

UNUSUAL FIRE AND EXPLOSION HAZARD

Contact with powerful oxidizing agents may cause fire and/or explosions (see Section X of this MSDS).

VI – ACCIDENTAL RELEASE MEASURES

STEPS TO BE TAKEN IN CASE MATERIAL IS RELEASED OR SPILLED

Persons involved in cleaning should first follow the precautions defined in Section VII of the MSDS. Spilled materials, where dust can be generated, may overexpose cleanup personnel to respirable quartz-containing dust. Wetting of spilled material and/or use of respiratory protective equipment may be necessary. Do not dry sweep spilled material.

This product is not subject to the reporting requirements of Title III of SARA, 1986, and 40 CFR 372.

VII – HANDLING AND STORAGE

This product is not intended or designed for, and should not be used as an abrasive blasting medium or for foundry applications.
Follow protective controls set forth in Section VIII of this MSDS when handling this product.
Respirable quartz-containing dust may be generated during processing, handling and storage. Do not breathe dust.
Avoid contact with skin and eyes.
Do not store near food or beverages or smoking materials.
Do not stand on piles of materials; it may be unstable.

VIII – EXPOSURE CONTROLS/PERSONAL PROTECTION

ENGINEERING CONTROLS

Ventilation: Use local exhaust, general ventilation or natural ventilation adequate to maintain exposures below appropriate exposure limits. If a person breathes large amounts of this material, move the exposed person to fresh air at once; other measures are usually unnecessary.

Other control measures: Respirable dust and quartz levels should be monitored regularly. Dust and quartz levels in excess of appropriate exposure limits should be reduced by all feasible engineering controls, including (but not limited to) dust suppression (wetting), ventilation, process enclosure, and enclosed employee work stations.

EYE/FACE PROTECTION

Safety glasses with side shields should be worn as minimum protection. Dust goggles should be worn when excessively (visible) dusty conditions are present or are anticipated. If product contacts the eyes, immediately wash the eyes with large amounts of water, occasionally lifting the lower and upper lids. Get medical attention immediately. Contact lenses should not be worn when working with this material.

SKIN PROTECTION

No personal protection recommended.

RESPIRATORY PROTECTION

Respirator Recommendations:

For respirable quartz levels that exceed or are likely to exceed appropriate exposure limits, a NIOSH-approved 100 series particulate filter respirator must be worn. If respirable quartz levels exceed or are likely to exceed an 8 hour-TWA of 0.5 mg/m^3, a NIOSH-approved air purifying, full-face respirator with a 100 series particulate filter must be worn. Respirator use must comply with applicable MSHA or OSHA standards, which include provisions for a user training program, respirator repair and cleaning, respirator fit testing, and other requirements. For additional information contact NIOSH at 1-800-356-4674.

Emergency or planned entry into unknown concentrations or IDLH conditions: Any self-contained breathing apparatus that has a full-face piece and is operated in a pressure-demand or other positive-pressure mode or any supplied-air respirator that has a full-face piece and is operated in a pressure-demand or other positive-pressure mode in combination with an auxiliary self-contained positive-pressure breathing apparatus.

Escape from unknown or IDLH conditions: Any air-purifying, full-face piece respirator with a high-efficiency particulate filter or any appropriate escape-type, self-contained breathing apparatus.

GENERAL HYGIENE CONSIDERATIONS

There are no known hazards associated with this material when used as recommended. Following the guidelines in this MSDS are recognized as good industrial hygiene practices. Avoid breathing dust. Avoid skin and eye contact. Wash dust-exposed skin with soap and water before eating, drinking, smoking, and using toilet facilities. Wash work clothes after each use.

IX – PHYSICAL AND CHEMICAL PROPERTIES

APPEARANCE AND ODOR Angular gray, white and tan particles ranging in size From powder to boulders. No odor.	SPECIFIC GRAVITY. 2.60 – 2.75
BOILING POINT Not applicable	VAPOR DENSITY IN AIR (AIR = 1) Not Applicable
VAPOR PRESSURE Not applicable	% VOLATILE, BY VOLUME 0%
EVAPORATION RATE 0	SOLUBILITY IN WATER Negligible

X – STABILITY AND REACTIVITY

STABILITY Stable	CONDITIONS TO AVOID Contact with incompatible materials (see below).

INCOMPATIBILITY (Materials to avoid)

Contact with powerful oxidizing agents such as fluorine, boron trifluoride, chlorine trifluoride, manganese trifluoride, and oxygen difluoride may cause fire and/or explosions. Silica dissolves in hydrofluoric acid producing a corrosive gas- silicon tetra fluoride.

XI – TOXICOLOGICAL INFORMATION

This product is a mixture of components. The composition percentages are listed in Section II. Toxicological information for each component is listed below:

Silicon Dioxide: It is comprised of amorphous and crystalline forms of silica. In some batches, crystalline silica may represent up to 100% of silicon dioxide.

Respirable crystalline silica (quartz):
ACGIH TLV= 0.025 mg/m^3
MSHA and OSHA PEL:
Crystalline quartz (respirable): PEL-TWA 10 mg/m^3/ (%SiO_2 + 2).
Crystobalite: Use ½ the value calculated from the count or mass formulae for quartz.
Tridymite: Use ½ the value calculated from the formulae for quartz.

Other Particulates: TLV = 10 mg/m^3 (inhalable/total particulate, not otherwise classified). TLV = 3 mg/m^3 (respirable particulate, not otherwise classified), OSHA PEL = 15 mg/m^3 (total particulate, not otherwise regulated), OSHA PEL = 5 mg/m^3 (respirable particulate, not otherwise regulated)

ACGIH, MSHA, and OSHA have determined that adverse effects are not likely to occur in the workplace provided exposure levels do not exceed the appropriate exposure limits. Lower exposure limits may be appropriate for some individuals including persons with pre-existing medical conditions such as those described below.

MEDICAL CONDITIONS AGGRAVATED BY EXPOSURE

Inhaling respirable dust and/or crystalline silica may aggravate existing respiratory system disease(s) and/or dysfunctions. Exposure to dust may aggravate existing skin and/or eye conditions.

Occupational exposure to free silica is known to produce silicosis, a chronic, disabling lung disease characterized by the formation of silica-containing nodules of scar tissue in the lungs. Simple silicosis, in which the nodules are less than 1 cm in diameter is generally asymptomatic but can be slowly progressive, even in the absence of continued exposure.

Silicosis leads to conditions such as lung fibrosis and reduced pulmonary function. The form and severity in which silicosis manifests itself depends in part on the type and extent of exposure to silica dusts: chronic, accelerated and acute forms are all recognized. In later stages the critical condition may become disabling and potentially fatal. Restrictive and / or obstructive changes in lung function may occur due to exposure. A risk associated with silicosis is development of pulmonary tuberculosis (silico-tuberculosis). Respiratory insufficiencies due to massive fibrosis and reduced pulmonary function, possibly with accompanying heart failure, are other potential causes of death due to silicosis.

Symptoms of Silicosis: Not all individuals with silicosis will exhibit symptoms (signs) of the disease. However, silicosis is progressive, and symptoms can appear at any time, even years after exposures have ceased. Symptoms of silicosis may include (but are not limited to): Shortness of breath; difficulty breathing with or without exertion; coughing; diminished work capacity; diminished chest expansion; reduction of lung volume; right heart enlargement and/or failure. Persons with silicosis have an increased risk of pulmonary tuberculosis infection.

Respirable dust containing newly broken particles has been shown to be more hazardous to animals in laboratory tests than respirable dust containing older silica particles of similar size. Respirable silica particles which had aged for sixty days or more showed less lung injury in animals than equal exposures of respirable dust containing newly broken pieces of silica.

There are reports in the literature suggesting that excessive crystalline silica exposure may be associated with adverse health effects involving the kidney, scleroderma (thickening of the skin caused by swelling and thickening of fibrous tissue) and other autoimmune disorders. However, this evidence has been obtained primarily from case reports involving individuals working in high exposure situations or those who have already developed silicosis; and therefore, this evidence does not conclusively prove a casual relationship between silica or silicosis and these adverse health effects. Several studies of persons with silicosis also indicate increased risk of developing lung cancer, a risk that increases with the duration of exposure. Many of these studies of silicosis do not account for lung cancer confounders, especially smoking. In October 1996, an IARC Working group re-assessing crystalline silica, a component of this product, designated crystalline silica as carcinogenic (Group 1). The NTP indicates that crystalline silica is reasonably anticipated to be a carcinogen (Group 2). These classifications are based on sufficient evidence of carcinogenicity in certain experimental animals and on selected epidemiological studies of workers exposed to crystalline silica. Crystalline silica in October 1996 was listed on the Safe Drinking Water and Toxic Enforcement ACT of 1986 (California Proposition 65) as a chemical known to the state to cause cancer or reproductive toxicity.

Aluminum Oxide:

Exposure route: Eyes, skin, inhalation.

Target organs: Eyes, skin, respiratory system.

Acute effect: Animal studies with α-alumina were reported in 1941. This study found that alumina particles well below 40 μm in diameter produced a "nuisance particulate" reaction in animals. Very fine Al_2O_3 powder was not fibrogenic in rats, guinea pigs, or hamsters when inhaled for 6 to 12 months and sacrificed at periods up to 12 months following the last exposure.

Chronic effect/carcinogenicity: Aluminum oxide is not classifiable as a human carcinogen. Epidemiologic surveys have indicated an excess of nonmalignant respiratory disease in workers exposed to aluminum oxide during abrasives production.

Ferric Oxide:

Exposure route: Inhalation.

Target organs: Respiratory system.

Acute effect: Benign pneumoconiosis with X-ray shadows indistinguishable from fibrotic pneumoconiosis. Experimental work in animals exposed by intratracheal injection or by inhalation to iron oxide mixed with less than 5% silica has shown no evidence of fibrosis produced in lung tissue.

Chronic effect/carcinogenicity: It is not generally accepted that inhalation or dermal exposure to iron oxide dust or fume poses a carcinogenic risk to human beings. Not classifiable as to human carcinogen potential.

Magnesium Oxide:
Exposure route: Inhalation, eye/skin contact.

Target organs: Eyes, respiratory system.

Acute effect: Magnesium oxide dust caused slight irritation of the eyes and nose, conjunctivitis, inflammation of the mucous membrane, and coughing up discolored sputum after industrial exposures amongst workers exposed to an unspecified concentration of MgO. Acute toxicity causes nausea, malaise, general depression and paralysis of respiratory, cardiovascular and central nervous system.

Experiments with cats exposed to freshly formed MgO (magnesium ranging from 21 to 156 mg) fumes plus 10% carbon dioxide showed uniform but slight hypothermia. These animals rapidly returned to normal and showed no subsequent ill effect upon cessation of MgO inhalation.

Chronic effect/carcinogenicity: NIOSH indicated that there may be a carcinogenic risk from exposure to MgO dust.

Calcium Oxide:
Exposure route: Inhalation, ingestion, skin/eye contact.

Target organs: Eyes, skin, respiratory system.

Acute effect: Direct contact of CaO with tissues, can result in burns and severe irritation because of its high reactivity and alkalinity. Major complaints of workers exposed to lime consist of irritation of the skin and eyes, although inflammation of the respiratory passages, ulceration and perforation of the nasal septum, and even pneumonia has been attributed to inhalation of the dust.

Chronic effect/carcinogenicity: Not classifiable as human carcinogen.

Sodium Oxide:
Exposure route: Inhalation, ingestion, skin/eye contact.

Target organs: Eyes, skin, respiratory system.

Acute effect: Corrosive – causes burns, irritation of skin, eyes, respiratory tract, extremely destructive of mucous membranes.

Chronic effect/carcinogenicity: Not classifiable as human carcinogen.

Potassium Oxide:
Exposure route: Inhalation, ingestion, skin/eye contact.

Target organs: Eyes, skin, respiratory system.

Acute effect: If inhaled, causes sore throat, cough, burning sensation and shortness of breath. Contact with skin produces pain and blisters. Severe deep burns, redness and pain occur with eye contact. Ingestion of K_2O results in burning sensations, abdominal pain, shock or collapse.

Chronic effect/carcinogenicity: Not classifiable as human carcinogen

Calcium Carbonate:
Exposure route: Inhalation, skin/eye contact.

Target organs: Eyes, skin, respiratory system.

Acute effect: Irritation of the eyes, skin and respiratory system and cough. It has been reported that there may be a silicosis risk when using impure limestone containing in excess of 3% quartz. However, it is claimed that pure calcium carbonate does not cause

pneumoconiosis. Adverse health effects have generally not been reported in literature among workers using $CaCO_3$.

Chronic effect/carcinogenicity: Not classifiable as human carcinogen

XII – ECOLOGICAL INFORMATION

No data available

XIII – DISPOSAL CONSIDERATIONS

WASTE DISPOSAL METHOD
Collect and reuse clean materials. Dispose of waste materials only in accordance with applicable federal, state, and local laws and regulations.

XIV – TRANSPORT INFORMATION

DOT HAZARD CLASSIFICATION
None

PLACARD REQUIRED
None

LABEL REQUIRED
Label as required by the OSHA Hazard Communication standard {29 CFR 1910.1200(f)}, and applicable state and local regulations.

XV – REGULATORY INFORMATION

Crystalline silica, a component of this product, is on the NTP and IARC carcinogen lists, but not on the OSHA carcinogen list. In October 1996, an IARC Working group re-assessing crystalline silica, a component of this product, designated crystalline silica as a human carcinogen (Group 1 carcinogen).

Crystalline silica in October 1996 was listed on the Safe Drinking Water and Toxic Enforcement ACT of 1986 (California Proposition 65) as chemical known to the state to cause cancer or reproductive toxicity.

XVI – OTHER INFORMATION

ACGIH: American Conference of Governmental Industrial Hygienists
C: Ceiling limit; the concentration that should not be exceeded during any part of the working exposure
CFR: US Code of Federal Regulations
DOT: US Department of Transportation
IARC: International Agency for Research on Cancer
IDLH: Immediately Dangerous to Life and Health
NIOSH: National Institute for Occupational Safety and Health, US Department of Health and Human Services
NTP: National Toxicology Program
OSHA: Occupational Safety and Health Administration, US Department of Labor
PEL: Permissible Exposure Limit
SARA Title III: Title III of the Superfund Amendments and Reauthorization Act, 1986
TLV: Threshold Limit Value
TWA: Time-weighted Average

FOR FURTHER INFORMATION	CONTACT:	Martin Marietta Aggregates Manager-Safety 2710 Wycliff Road Raleigh, NC 27607 919/781-4550 HOURS; 8 AM – 5 PM (EST)
DATE OF PREPARATION 11/07		

NOTICE: Martin Marietta Materials believes that the information contained on this Material Safety Data Sheet is accurate. The suggested precautions and recommendations are based on recognized good work practices and experience as of the date of publication. They are not necessarily all-inclusive or fully adequate in every circumstance as not all use circumstances can be anticipated. Also, the suggestions should not be confused with nor followed in violation of applicable laws, regulation, rules or insurance requirement. However, product must not be used in a manner which could result in harm.

NO WARRANTY, EXPRESSED OR IMPLIED, OF MERCHANTABILITY, FITNESS FOR A PARTICULAR PURPOSE OR OTHERWISE IS MADE

ATTACHMENT I

EMISSION UNITS TABLE

Attachment I

Emission Units Table

(includes all emission units and air pollution control devices that will be part of this permit application review, regardless of permitting status)

Emission Unit ID[1]	Emission Point ID[2]	Emission Unit Description	Year Installed/ Modified	Design Capacity	Type[3] and Date of Change	Control Device[4]
10-RX-01	VS-01	Reactor	2014	32,135 lb/hr*	Removed	10-SR-01
10-RX-02	VS-01	Reactor	2016	32,135 lb/hr*	New	10-SR-01
10-RX-03	VS-01	Reactor	2016		New	10-SR-01
*$CaCl_2$ production capacity on an anhydrous basis.						

[1] For Emission Units (or Sources) use the following numbering system:1S, 2S, 3S,... or other appropriate designation.
[2] For Emission Points use the following numbering system:1E, 2E, 3E, ... or other appropriate designation.
[3] New, modification, removal
[4] For Control Devices use the following numbering system: 1C, 2C, 3C,... or other appropriate designation.

ATTACHMENT J

EMISSION POINTS DATA SUMMARY SHEET

Attachment J

EMISSION POINTS DATA SUMMARY SHEET

Table 1: Emissions Data															
Emission Point ID No. *(Must match Emission Units Table & Plot Plan)*	Emission Point Type[1]	Emission Unit Vented Through This Point *(Must match Emission Units Table & Plot Plan)*		Air Pollution Control Device *(Must match Emission Units Table & Plot Plan)*		Vent Time for Emission Unit *(chemical processes only)*		All Regulated Pollutants - Chemical Name/CAS[3] *(Speciate VOCs & HAPS)*	Maximum Potential Uncontrolled Emissions[4]		Maximum Potential Controlled Emissions[5]		Emission Form or Phase *(At exit conditions, Solid, Liquid or Gas/Vapor)*	Est. Method Used[6]	Emission Concentration[7] (ppmv or mg/m[4])
		ID No.	Source	ID No.	Device Type	Short Term[2]	Max (hr/yr)		lb/hr	ton/yr	lb/hr	ton/yr			
VS-01	Verticle	10-RX-02 10-RX-03	Reactor	VS-01	Scrubber	NA	NA	CO_2	6.14 tph	53,809 tpy	6.14 tph	53,809 tpy	Gas	MB	NA
Existing emissions are not changed by the replacement of the reactor. CO_2 is shown here as an additional emission since it is now a regulated pollutant. The other emissions from the process that vent through VS-01 are from other sources also controlled by VS-01.															

The EMISSION POINTS DATA SUMMARY SHEET provides a summation of emissions by emission unit. Note that uncaptured process emission unit emissions are not typically considered to be fugitive and must be accounted for on the appropriate EMISSIONS UNIT DATA SHEET and on the EMISSION POINTS DATA SUMMARY SHEET. Please note that total emissions from the source are equal to all vented emissions, all fugitive emissions, plus all other emissions (e.g. uncaptured emissions). Please complete the FUGITIVE EMISSIONS DATA SUMMARY SHEET for fugitive emission activities.

1 Please add descriptors such as upward vertical stack, downward vertical stack, horizontal stack, relief vent, rain cap, etc.

2 Indicate by "C" if venting is continuous. Otherwise, specify the average short-term venting rate with units, for intermittent venting (ie., 15 min/hr). Indicate as many rates as needed to clarify frequency of venting (e.g., 5 min/day, 2 days/wk).

3 List all regulated air pollutants. Speciate VOCs, including all HAPs. Follow chemical name with Chemical Abstracts Service (CAS) number. **LIST** Acids, CO, CS_2, VOCs, H_2S, Inorganics, Lead, Organi

4 Give maximum potential emission rate with no control equipment operating. If emissions occur for less than 1 hr, then record emissions per batch in minutes (e.g. 5 lb VOC/20 minute batch).

5 Give maximum potential emission rate with proposed control equipment operating. If emissions occur for less than 1 hr, then record emissions per batch in minutes (e.g. 5 lb VOC/20 minute batch).

6 Indicate method used to determine emission rate as follows: MB = material balance; ST = stack test (give date of test); EE = engineering estimate; O = other (specify).

7 Provide for all pollutant emissions. Typically, the units of parts per million by volume (ppmv) are used. If the emission is a mineral acid (sulfuric, nitric, hydrochloric or phosphoric) use units of milligram per dry cubic meter (mg/m^3) at standard conditions (68 °F and 29.92 inches Hg) (see 45CSR7). If the pollutant is SO_2, use units of ppmv (See 45CSR10).

Attachment J

EMISSION POINTS DATA SUMMARY SHEET

Table 2: Release Parameter Data								
Emission Point ID No. *(Must match Emission Units Table)*	Inner Diameter (ft.)	Exit Gas			Emission Point Elevation (ft)		UTM Coordinates (km)	
		Temp. (°F)	Volumetric Flow [1] (acfm) *at operating conditions*	Velocity (fps)	Ground Level *(Height above mean sea level)*	Stack Height [2] *(Release height of emissions above ground level)*	Northing	Easting
VS-01	NA	104	NA	NA	~598	~630	4,345.307	453.678

[1] Give at operating conditions. Include inerts.
[2] Release height of emissions above ground level.

ATTACHMENT L

EMISSION UNIT DATA SHEETS

REACTOR DATA SHEET

Provide the following information for each piece of equipment that is a potential or actual source of emissions as shown on the *Equipment List Form* and other parts of application.

Identification Number (as shown on *Equipment List Form*): 10-RX-01

THIS UNIT BEING REPLACED

1. Name and type of equipment (e.g. CSTR, plug flow, batch, etc.)
   Continuous Flow Reactor

2. Type of operation ☐ Batch ☒ Continuous ☐ Semi-batch

3. Projected Actual Equipment Operating Schedule (complete appropriate lines):

24	hrs/day	7	days/week	52	weeks/year
NA	hrs/batch	NA	batches/day, weeks (Circle one)	365	day, weeks/yr (Circle one)

4. Feed Data Flow In = gal/hr, or gal/batch

Material Name & CAS No.	Phase[a]	Specific Gravity	Vapor Pressure[b]	Charge Rate			Fill Time (min/batch, run)[c]
				Normal	Max	Units	
Limestone $CaCO_3$	S	85-90 lb/ft^3	NA	353 128,815	353 128,815	tpd tpy	NA
36% HCL	L	9.8 lb/gal	~2.0X10^{-6}	144,000 52,560,000	144,000 52,560,000	gpd gpy	NA

a. S = Solid, L = Liquid, G = gas or vapor
b. At feed conditions
c. Total time that equipment is filling per batch or run (start-up), for tank or vessel-type equipment.

5. Provide all **chemical reactions** that will be involved (if applicable), including the residence time and any side reactions that may occur as well as gases that may be generated during these reactions. Indicate if the reaction(s) are exothermic or endothermic.

$$2HCl+CaCO_3 \longrightarrow CaCL_2+H_2O+CO_2$$

6. Maximum Temperature	7A. Maximum Pressure Ambient 7B. Max. Set Pressure for venting NA
°C	mmHg mmHg
~104 °F	psig psig

8. Output Data Flow Out = gal/hr or gal/batch

Material Name and CAS No.	Phase	Specific Gravity	Vapor Pressure	Hourly or Batch Output Rate		
				Normal	Maximum	Units
$CaCl_2$ (48.8%)	L	11.9 lb/gd	0.18 psia	152,844 55,788,000	152,844 55,788,000	gpd gpy

9. Complete the following emission data for equipment connected to a header exhaust system, giving emissions levels before entering header system (i.e. before control equipment).

☐ Check here if not applicable

Emission Point ID (exhaust point of header system):

Material Name and CAS No.	Maximum Potential Emission Rate (lb/hr)	Method **
CO_2	6.14 tph	See equation on previous page

** MB - material balance: EE - Engineering Estimate: TM - Test Measurement (submit test data): O - other (Explain)

10. Provide the following information pertaining to each condenser that may be attached to this reactor. Attach additional pages as necessary if more than one condenser is used for this reactor. Complete the Condenser Air Pollution Control Device Sheet if necessary.

☒ Check here if not applicable

10A. Cooling material

10B. Minimum and Maximum flowrate of cooling material (gal/hr)

10C. Inlet temperature of cooling material (°F)

10D. Outlet temperature of cooling material (°F)

10E. Pressure drop of gas to be condensed from inlet to outlet (psig)

10F. Inlet temperature of gas stream (°F)

10G. Outlet temperature of gas stream (°F)

10H. Number of passes

10I. Cooling surface area

11. Provide the following pertaining to auxiliary equipment that burns fuel (heaters, dryers, etc.):

☒ Check here if not applicable

11A. Type of fuel and maximum fuel burn rate, per hour:

11B. Provide maximum percent sulfur (S), ash content of fuel, and the energy content using appropriate units:

%S % Ash BTU/lb, std. ft^3/day, gal

(circle one)

11C. Theoretical combustion air requirement in SCFD per unit of fuel (circle appropriate unit) @ 70°F and 14.7 PSIA:

SCFD/lb, SCFD, gal (circle one)

11D. Percent excess air: %

11E. Type, amount, and BTU rating of burners and all other firing equipment that are planned to be used:

11F. Total maximum design heat input: $\times 10^6$ BTU/hr.

12. **Proposed Monitoring, Recordkeeping, Reporting, and Testing**
Please propose monitoring, recordkeeping, and reporting in order to demonstrate compliance with the proposed operating parameters. Please propose testing in order to demonstrate compliance with the proposed emissions limits.

MONITORING	RECORDKEEPING
As required in the existing permit.	As required in the existing permit.
REPORTING	**TESTING**
As required in the existing permit.	As required in the existing permit.

MONITORING. PLEASE LIST AND DESCRIBE THE PROCESS PARAMETERS AND RANGES THAT ARE PROPOSED TO BE MONITORED IN ORDER TO DEMONSTRATE COMPLIANCE WITH THE OPERATION OF THIS PROCESS EQUIPMENT OPERATION OR AIR POLLUTION CONTROL DEVICE.

RECORDKEEPING. PLEASE DESCRIBE THE PROPOSED RECORDKEEPING THAT WILL ACCOMPANY THE MONITORING.

REPORTING. PLEASE DESCRIBE THE PROPOSED FREQUENCY OF REPORTING OF THE RECORDKEEPING.

TESTING. PLEASE DESCRIBE ANY PROPOSED EMISSIONS TESTING FOR THIS PROCESS EQUIPMENT OR AIR POLLUTION CONTROL DEVICE.

13. Describe all operating ranges and maintenance procedures required by Manufacturer to maintain warranty
NA

NOTE: An *AIR POLLUTION CONTROL DEVICE SHEET* must be completed for any air pollution device(s) (except emergency relief devices) used to control emissions from this reactor.

REACTOR DATA SHEET

Provide the following information for each piece of equipment that is a potential or actual source of emissions as shown on the *Equipment List Form* and other parts of application.

Identification Number (as shown on *Equipment List Form*): 10-RX-02 and 10-RX-03

Replacement Reactors

1. Name and type of equipment (e.g. CSTR, plug flow, batch, etc.)
   Continuous Flow Reactors

2. Type of operation ☐ Batch ☒ Continuous ☐ Semi-batch

3. Projected Actual Equipment Operating Schedule (complete appropriate lines):

24	hrs/day	7	days/week	52	weeks/year
NA	hrs/batch	NA	batches/day, weeks (Circle one)	365	day, weeks/yr (Circle one)

4. Feed Data Flow In = gal/hr, or gal/batch

Material Name & CAS No.	Phase[a]	Specific Gravity	Vapor Pressure[b]	Charge Rate			Fill Time (min/batch, run)[c]
				Normal	Max	Units	
Limestone $CaCO_3$	S	85-90 lb/ft^3	NA	353 128,815	353 128,815	tpd tpy	NA
36% HCL	L	9.8 lb/gal	~2.0X10^{-6}	144,000 52,560,000	144,000 52,560,000	gpd gpy	NA

Combined Reactor Feed/Charge Rate

a. S = Solid, L = Liquid, G = gas or vapor
b. At feed conditions
c. Total time that equipment is filling per batch or run (start-up), for tank or vessel-type equipment.

5. Provide all **chemical reactions** that will be involved (if applicable), including the residence time and any side reactions that may occur as well as gases that may be generated during these reactions. Indicate if the reaction(s) are exothermic or endothermic.

$$2HCl+CaCO_3 \longrightarrow CaCL_2+H_2O+CO_2$$

6. Maximum Temperature	7A. Maximum Pressure Ambient 7B. Max. Set Pressure for venting NA
°C	mmHg mmHg
~104 °F	psig psig

8. Output Data Flow Out = gal/hr or gal/batch

Material Name and CAS No.	Phase	Specific Gravity	Vapor Pressure	Hourly or Batch Output Rate		
				Normal	Maximum	Units
$CaCl_2$ (48.8%)	L	11.9 lb/gd	0.18 psia	152,844 55,788,000	152,844 55,788,000	gpd gpy

9. Complete the following emission data for equipment connected to a header exhaust system, giving emissions levels before entering header system (i.e. before control equipment).

☐ Check here if not applicable

Emission Point ID (exhaust point of header system):

Material Name and CAS No.	Maximum Potential Emission Rate (lb/hr)	Method **
CO_2	6.14 tph	See equation on previous page

** MB - material balance: EE - Engineering Estimate: TM - Test Measurement (submit test data): O - other (Explain)

10. Provide the following information pertaining to each condenser that may be attached to this reactor. Attach additional pages as necessary if more than one condenser is used for this reactor. Complete the Condenser Air Pollution Control Device Sheet if necessary.

☒ Check here if not applicable

10A. Cooling material

10B. Minimum and Maximum flowrate of cooling material (gal/hr)

10C. Inlet temperature of cooling material (°F)

10D. Outlet temperature of cooling material (°F)

10E. Pressure drop of gas to be condensed from inlet to outlet (psig)

10F. Inlet temperature of gas stream (°F)

10G. Outlet temperature of gas stream (°F)

10H. Number of passes

10I. Cooling surface area

11. Provide the following pertaining to auxiliary equipment that burns fuel (heaters, dryers, etc.):

☒ Check here if not applicable

11A. Type of fuel and maximum fuel burn rate, per hour:

11B. Provide maximum percent sulfur (S), ash content of fuel, and the energy content using appropriate units:

%S % Ash BTU/lb, std. ft^3/day, gal

(circle one)

11C. Theoretical combustion air requirement in SCFD per unit of fuel (circle appropriate unit) @ 70°F and 14.7 PSIA:

SCFD/lb, SCFD, gal (circle one)

11D. Percent excess air: %

11E. Type, amount, and BTU rating of burners and all other firing equipment that are planned to be used:

11F. Total maximum design heat input: $\times 10^6$ BTU/hr.

12. **Proposed Monitoring, Recordkeeping, Reporting, and Testing**
Please propose monitoring, recordkeeping, and reporting in order to demonstrate compliance with the proposed operating parameters. Please propose testing in order to demonstrate compliance with the proposed emissions limits.

MONITORING	RECORDKEEPING
As required in the existing permit.	As required in the existing permit.
REPORTING	**TESTING**
As required in the existing permit.	As required in the existing permit.

MONITORING. PLEASE LIST AND DESCRIBE THE PROCESS PARAMETERS AND RANGES THAT ARE PROPOSED TO BE MONITORED IN ORDER TO DEMONSTRATE COMPLIANCE WITH THE OPERATION OF THIS PROCESS EQUIPMENT OPERATION OR AIR POLLUTION CONTROL DEVICE.

RECORDKEEPING. PLEASE DESCRIBE THE PROPOSED RECORDKEEPING THAT WILL ACCOMPANY THE MONITORING.

REPORTING. PLEASE DESCRIBE THE PROPOSED FREQUENCY OF REPORTING OF THE RECORDKEEPING.

TESTING. PLEASE DESCRIBE ANY PROPOSED EMISSIONS TESTING FOR THIS PROCESS EQUIPMENT OR AIR POLLUTION CONTROL DEVICE.

13. Describe all operating ranges and maintenance procedures required by Manufacturer to maintain warranty
NA

NOTE: An *AIR POLLUTION CONTROL DEVICE SHEET* must be completed for any air pollution device(s) (except emergency relief devices) used to control emissions from this reactor.

ITEM NO.	PART NUMBER	DESCRIPTION	QTY.
1	Base	63" dia base, HDPE PG	1
2	Shell Left	63" dia shell left, HDPE sdr 32.5	1
3	24in flange	24" SDR.32 flange, HDPE	1
4	24 Galvanized Backing Ring	24" Backing Ring	1
5	24 blind flange	24" Blind Flange, Fabric Back HDPE	1
6	24 steel blind flange	24" Blind Flange, CS	1
7	20in flange	20" SDR 32.5 Flange, HDPE	1
8	20 Galvanized Backing Ring	20" Galvanized Backing Ring	1
9	Lifting Lug	Lifting Lug	4
10	30sdr17 pipe	30" SDR 17 Stub Flange, HDPE	1
11	30sdr17 stub flange	30" SDR 17 Stub Flange, HDPE	1
12	30in Galvanized BUR	30" Convolted Galvanized BUR	1
13	4in sdr17 flange Acid Inlet Lower	4" sdr 17 flange adapter, HDPE	1
14	4in Galvanized BUR	4" CS backing ring	3
15	4in sdr17 flange	4" sdr 17 flange adapter, HDPE	2
16	4in Acid Distributor	4" Acid Distributor, HDPE	1
17	Acid Distributor Cover	12" sdr 32.5 HDPE pipe	1
18	Gusset	Gusset	4
19	24" Manway Stud	1-1/4-7 x 8" A193 B7 Stud	20
20	1-1/4-7 Hex Nut	1-1/4-7 Hex Nut A193	40
21	1-1/4" Flat Washer	1-1/4" Flat Washer	40
22	Flat Top	Flat Top	3

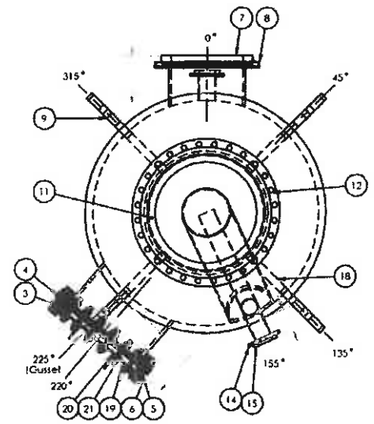

PLAN

Nozzle Schedule							
Mark	Service	Size	Face	Type	Position	Elev.	Projection
N1	Side Manway	24	FF	FLGD	225°	32"	1.5"
N2	Steel Blind Flange	24	Flat		225°	32"	
N3	Foam Breaker Inlet	20	FF	FLGD	0°	350.13"	10"
N4	Acid Distribution Inlet	4	FF	FLGD	155°	24"	6
N5	Acid Distribution Inlet	4	FF	FLGD	155°	60"	6"
N6	Drain	4	FF	FLGD	0°	7"	6
N7	Material Fill	30	FF	FLGD	Top		12"

General	
No. Req'd	1
Vessel Contents	Calcium Chloride
Vessel Capacity	4,300 gals
Estimated Empty Weight	5725 lbs.
Estimated Full Weight	
Bolting Material	A193 B7 Class 2B
Gasket Material	Viton
Ext. Surface	NONE
Design	
Design Code	DVS 2205
Specific Gravity	2.1
Design Ext Pressure	ATM
Design Temp (F.)	150
Wind Loading	N/A
Structure Type	Extruded PE 100

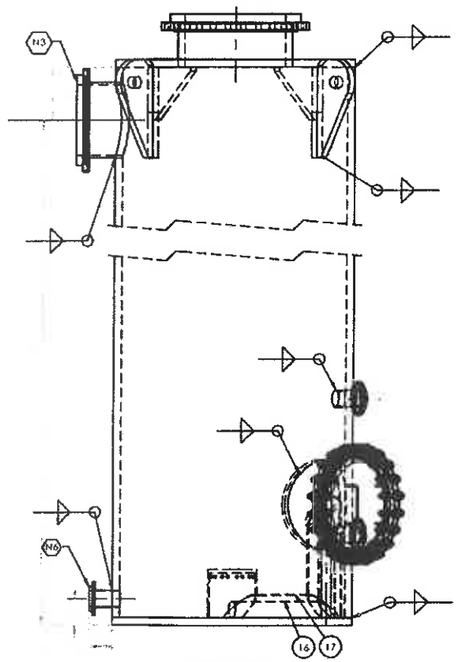

Left Elevation

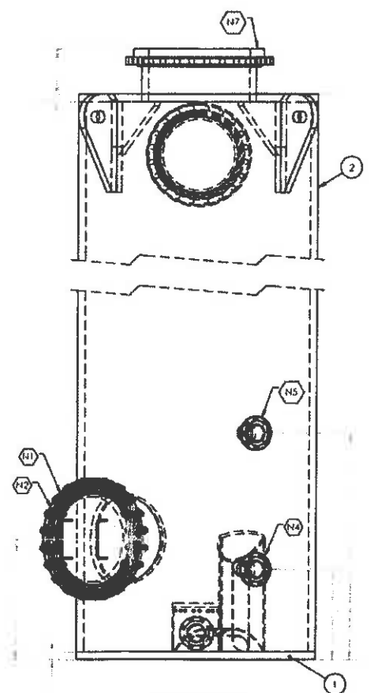

Front Elevation

Notes:

1. Thermoplastic welds shall be in accordance with AWS B2.4
2. Holiday spark test all welds per ASTM D5162.08.
3. Trim all internal flange projection flush to inside wall.
4. All flanges conform to ANSI B16.5, 150 lb rating.
5. Bond items, 6&7 together use Magnolia 6380 A/B epoxy adhesive.

Plastekwerks

TITLE:

Left Tank

SIZE DWG. NO. REV

D 10-RX-03 C

SCALE 1:16 WEIGHT: 5777.51 SHEET 1 OF 3

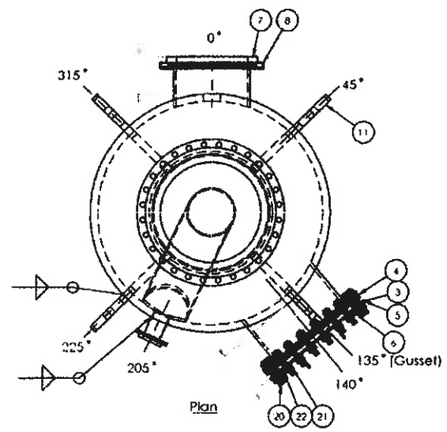

Plan

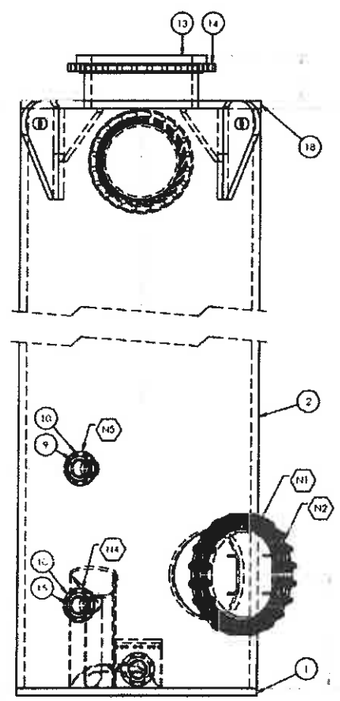

Front Elevation

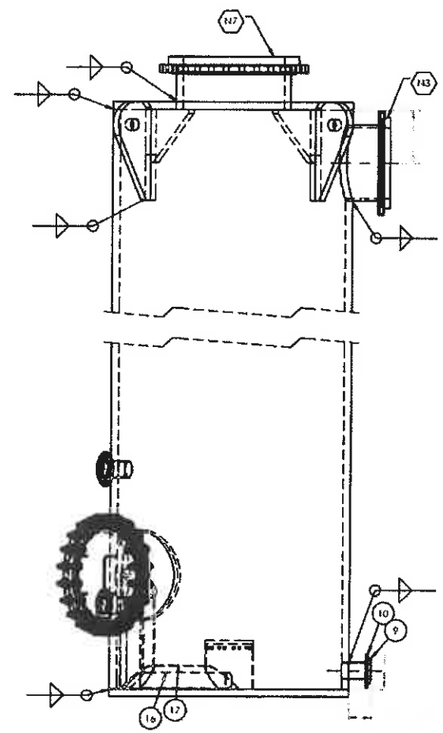

ITEM NO.	PART NUMBER	DESCRIPTION	QTY.
1	Base	63" dia base, HDPE PG	1
2	Shell Right	63" dia shell Right, HDPE SDR 32.5	1
3	24in flange	24" SDR 32 flange, HDPE	1
4	24 Galvanized Backing Ring	24" Backing Ring	1
5	24 blind flange	24" Blind Flange, Fabric Back HDPE	1
6	24 steel blind flange	24" Blind Flange, CS	1
7	20in flange	20" SDR 32.5 Flange, HDPE	1
8	20 Galvanized Backing Ring	20" Galvanized Backing Ring	1
9	4in sdr17 flange	4" sdr 17 flange adapter, HDPE	2
10	4in Galvanized BUR	4" CS backing ring	3
11	Lifting Lug	Lifting Lug	4
12	30dr17 pipe	30" SDR 17 Stub Flange, HDPE	1
13	30dr17 stub flange	30" SDR 17 Stub Flange, HDPE	1
14	30in DI BUR	30" Convoluted DI BUR	1
15	4in sdr17 flange Acid Inlet Lower	4" sdr 17 flange adapter, HDPE	1
16	4in Acid Distributor	4" Acid Distributor, HDPE	1
17	Acid Distributor Cover	12" sdr 32.5 HDPE pipe	1
18	Flat Top	Flat Top	1
19	Gussel	Gussel	4
20	24" Manway Stud	1-1/4-7 x 8" A193 B7 Stud	20
21	1-1/4-7 Hex Nut	1-1/4-7 Hex Nut A193	40
22	1-1/4" Flat Washer	1-1/4" Flat Washer	40

Nozzle Schedule

Mark	Service	Size	Face	Type	Position	Elev.	Projection
N1	Side Manway	24	FF	FLGD	140°	32"	12"
N2	Steel Blind Flange	24	Flat		140°	32"	
N3	Foam Breaker Inlet	20	FF	FLGD	0°	350.13"	10"
N4	Acid Distribution inlet	4	FF	FLGD	205°	24"	6"
N5	Acid Distribution inlet	4	FF	FLGD	205°	60"	6"
N6	Drain	4	FF	FLGD	0°	7"	6"
N7	Material Fill	20	FF	FLGD	Top		12"

General	
No Req'd	1
Vessel Contents	Calcium Chloride
Vessel Capacity	4300
Estimated Empty Weight	5725 lbs
Estimated Full Weight	
Bolting Material	A193 B7 Class 2B
Gasket Material	Viton
Ext Surface	NONE
Design	
Design Code	DVS 2205
Specific Gravity	2.1
Design Ext Pressure	ATM
Design Temp. (F)	150
Wind loading	N/A
Structure Type	Extruded PE 100

Note:
1. Thermoplastic welds hall be in acordance with AWS B2.4.
2. Holiday spark test all welds per ASTM D5162.08
3. Trim all internal flange projections flush to the inside wall.
4. All flange conformto ANSI B16.5, 150 lb rating.
5. Bond items #6 & 7 together use Magnolia 6380 A/8 epoxy adhesive.

Plastekwerks

TITLE Right Tank

SIZE D DWG. NO. 10-RX-02 REV C

SCALE: 1:48 WEIGHT: 5725 24 SHEET 2 OF 4

ATTACHMENT N

SUPPORTING EMISSIONS CALCULATIONS

Tetra Technologies, Inc.
Reactor Emissions of CO2

Potesta & Associates, Inc.
Project No. 0101-13-0548

By: PEW
Date: January 14, 2014

Checked By: JAG
Date: January 15, 2014

The method for determining the CO2 emissions from the formation of CaCl2 used in the following calculation is based on the following:

$$2HCl+CaCO_3 \longrightarrow CaCl_2+H_2O+CO_2$$

Maximum Limestone Consumed (1) =	14.70	tons per hour
Molecular Weight of CO2 =	44.01	
Molecular Weight of CACO3 =	100.09	
Average % CACO3 in Stone =	95	

CO2 = Limestone Consumed x (Molecular Weight of CO2 / Molecular Weight of CACO3) x (Average % CACO3 in Stone / 100)

CO2 =	6.14	tons/hour	1 Short Ton =	0.9072 Metric Ton
	5.57	metric tons/hour		

1. The maximum limestone consumed in tons per hour is based on the below yearly number divided by 8,760 hours per year.

Purpose: This calculation is being completed as part of the GHG Reporting Requirements for EPA.

The method for determining the CO2 emissions from the formation of CaCl2 used in the following calculation is based on an email

Maximum Limestone Consumed (1) =	353	tons per day
	128,815	tons per year
Molecular Weight of CO2 =	44.01	
Molecular Weight of CACO3 =	100.09	
Average % CACO3 in Stone =	95	

CO2 = Limestone Consumed x (Molecular Weight of CO2 / Molecular Weight of CACO3) x (Average % CACO3 in Stone / 100)

CO2 =	53,809	tons/year	1 Short Ton =	0.9072 Metric Ton
	48,816	metric tons/year		

ATTACHMENT O

MONITORING, RECORDKEEPING, REPORTING, TESTING PLANS

ATTACHMENT O

MONITORING/RECORDKEEPING/REPORTING/TESTING PLANS

Tetra Technologies, Inc. requests that the monitoring, recordkeeping, reporting and testing as stated in the existing permit remain in effect.

ATTACHMENT R

AUTHORITY FORM

TETRA TECHNOLOGIES, INC.

CERTIFICATE OF AUTHORITY

The undersigned, being a Senior Vice President of TETRA Technologies, Inc. ("TETRA" or the "Company"), a corporation organized and existing under the laws of the State of Delaware, does hereby certify on behalf of the Company, that:

1. TETRA Technologies, Inc. is the owner of several parcels of real property in California relating to its calcium chloride and sodium chloride mining operations, including certain patented and unpatented mining claims. In connection with such real property interests in California, TETRA may be required, from time to time, to execute and deliver to the United States Department of Interior - Bureau of Land Management certain legal documents, permits, mining reports, etc. (collectively, "Legal Documents"). As the Company's principal offices are located in The Woodlands, Texas, TETRA desires to designate a representative with authority to execute and deliver such Legal Documents for and on behalf of the Company.

2. Greg McKnight has been duly appointed as the Company's authorized representative to execute and deliver to the United States Department of Interior – Bureau of Land Management Legal Documents for and on behalf of the Company, and the signature set forth opposite his name below is his genuine signature:

Name	Signature
Greg McKnight	

3. You may rely upon this letter of authority until such time as the Company provides you with notice of the amendment or revocation of such authority.

IN WITNESS WHEREOF, the undersigned has caused this Certificate to be executed as of this 23 day of October, 2012.

TETRA TECHNOLOGIES, INC.

By: _____

Philip N. Longorio
Senior Vice President

APB

ACKNOWLEDGEMENT

STATE OF TEXAS §
§
COUNTY OF MONTGOMERY §

Before me, the undersigned authority, on this day personally appeared, Philip N. Longorio, Senior Vice President of TETRA Technologies, Inc., known to me to be the person who signed the foregoing instrument, and acknowledged to me that he executed the instrument for the purposes therein expressed.

Given under my hand and seal of office on this 23 day of October, 2012.

_____
Notary Public in and for the State of Texas

DOROTHY L. POHTS
MY COMMISSION EXPIRES
December 15, 2014