Lee
G65-C547
049-00185

RK&K ENGINEERS
242 North Tomado Way, Suite 1 | Keyser, WV 26726 | P 304.788.3370 | F 304.788.3577 | www.rkk.com

January 5, 2015

RECEIVED
JAN - 7 2015
WV DEP / DIV. OF AIR QUALITY

West Virginia Department of Environmental Protection
Division of Air Quality
Permitting Section
601 57th Street, SE
Charleston, WV 25304

RE: G65-C – Class 1 Emergency Generator Registration
Greater Marion Public Service District
Carolina and Idamay Sewer System Replacement Project – Contract 3
Carolina Sewage Pump Station

Dear Madam/Sir,

Enclosed please find an Application for General Permit Registration for a G65-C – Class 1 Emergency Generator that will be located at the Carolina Pump Station site of the Carolina and Idamay Sewer System Replacement Project. The generator will operate under the U.S. EPA New Source Performance Standards (NSPS), 40 CFR 60 subpart IIII Tier 3 exhaust emission levels. Enclosed please find one original and two copies of the application along with a check for $250 for the registration fee. Feel free to contact me with any questions or if you need any additional information at myoungblood@rkk.com or 304-788-3370.

Sincerely,

RUMMEL, KLEPPER & KAHL, LLP

Matthew J. Youngblood
Engineer

Encl.

T:\(2005) Projects\1105-111_Greater Marion PSD\DOCUMENTS\Permits\DEP Generator\Carolina\Coverletter.doc

Table of Contents

G65-C General Permit Registration
Greater Marion Public Service District
Carolina and Idamay Sewer System Replacement Project – Contract 3
Carolina Sewage Pump Station

- Cover Page
- Application for General Permit Registration
- Attachment A: Current Business Certificate
- Attachment B: Process Description
- Attachment D: Process Flow Diagram
- Attachment E: Plot Plan
- Attachment F: Area Map
- Attachment G: Equipment Data Sheets & Registration Section Applicability Form
- Attachment I: Emissions Calculations
- Attachment L: General Permit Registration Application Fee
- Attachment O: Emissions Summary Sheets

General Permit Registration
G65-C – Class 1 Emergency Generator
Greater Marion Public Service District
Carolina and Idamay Sewer System Replacement Project
Contract 3
Carolina Sewage Pump Station

Greater Marion Public Service District
44 Aberdean Drive
Worthington, WV 26591

Submitted to:
West Virginia Department of Environmental Protection
Division of Air Quality
601 57th Street, SE
Charleston, WV 25304

Submitted:
January 5, 2015

WEST VIRGINIA
DEPARTMENT OF ENVIRONMENTAL PROTECTION
DIVISION OF AIR QUALITY
601 57th Street, SE
Charleston, WV 25304
Phone: (304) 926-0475 • www.dep.wv.gov/daq

APPLICATION FOR GENERAL PERMIT REGISTRATION

CONSTRUCT, MODIFY, RELOCATE OR ADMINISTRATIVELY UPDATE A STATIONARY SOURCE OF AIR POLLUTANTS

☑ CONSTRUCTION ☐ MODIFICATION ☐ RELOCATION ☐ CLASS I ADMINISTRATIVE UPDATE ☐ CLASS II ADMINISTRATIVE UPDATE

CHECK WHICH TYPE OF GENERAL PERMIT REGISTRATION YOU ARE APPLYING FOR:

- ☐ **G10-D** – Coal Preparation and Handling
- ☐ **G20-B** – Hot Mix Asphalt
- ☐ **G30-D** – Natural Gas Compressor Stations
- ☐ **G33-A** – Spark Ignition Internal Combustion Engines
- ☐ **G35-A** – Natural Gas Compressor Stations (Flare/Glycol Dehydration Unit)
- ☐ **G40-C** – Nonmetallic Minerals Processing
- ☐ **G50-B** – Concrete Batch
- ☐ **G60-C** - Class II Emergency Generator
- ☑ **G65-C** – Class I Emergency Generator
- ☐ **G70-A** – Class II Oil and Natural Gas Production Facility

SECTION I. GENERAL INFORMATION

1. Name of applicant (as registered with the WV Secretary of State's Office): Greater Marion Public Service District

2. Federal Employer ID No. **(FEIN):** 26-4619149

3. Applicant's mailing address: 44 Aberdean Drive, Worthington, WV 26591

4. Applicant's physical address: 44 Aberdean Drive, Worthington, WV 26591

5. If applicant is a subsidiary corporation, please provide the name of parent corporation:

6. **WV BUSINESS REGISTRATION.** Is the applicant a resident of the State of West Virginia? ☑ YES ☐ NO

⇨ IF **YES,** provide a copy of the Certificate of **Incorporation/ Organization / Limited Partnership** (one page) including any name change amendments or other Business Registration Certificate as **Attachment A.**

⇨ IF **NO,** provide a copy of the **Certificate of Authority / Authority of LLC / Registration** (one page) including any name change amendments or other Business Certificate as **Attachment A.**

SECTION II. FACILITY INFORMATION

7. Type of plant or facility (stationary source) to be constructed, modified, relocated or administratively updated (e.g., coal preparation plant, primary crusher, etc.): Wastewater Pump Station

8a. Standard Industrial Classification Classification (SIC) code: 4952

AND

8b. North American Industry System (NAICS) code:

9. DAQ Plant ID No. (for existing facilities only): ___-___

10. List all current 45CSR13 and other General Permit numbers associated with this process (for existing facilities only):

RECEIVED
JAN - 7 2015
WV DEP / DIV. OF AIR QUALITY

Date of Last Application Revision 10/18/2013

A: PRIMARY OPERATING SITE INFORMATION

11A. Facility name of primary operating site:	12A. Address of primary operating site:
Carolina Pump Station	Mailing: 44 Aberdean Dr., Worthington, WV Physical: Main St., Carolina, WV

13A. Does the applicant own, lease, have an option to buy, or otherwise have control of the proposed site? ☑ YES ☐ NO

⇨ IF **YES**, please explain: Owns Property

⇨ IF **NO**, YOU ARE NOT ELIGIBLE FOR A PERMIT FOR THIS SOURCE.

14A. ⇨ For **Modifications or Administrative Updates** at an existing facility, please provide directions to the present location of the facility from the nearest state road;

⇨ For Construction or Relocation permits, please provide directions to the proposed new site location from the nearest state road. Include a **MAP** as **Attachment F**.

From Interstate 79N take Exit 132, Turn left onto Fairmont Ave. (State Rt. 250), Turn left onto Nasa Blvd., Turn Right on Industrial Park Rd. (Co. Rt. 58), Turn Left onto Manley Chapel Rd, Turn Right onto County Rt. 27, Turn Left onto Main St. (US 19), Turn Right onto State Rt. 218, Turn Left onto Carolina Rd, (Co. Rt. 52), Pump Station is located on the left just past Welcome to Carolina sign

15A. Nearest city or town:	16A. County:	17A. UTM Coordinates:
Carolina	Marion	Northing (KM): 4370.08 Easting (KM): 562.2 Zone: 17

18A. Briefly describe the proposed new operation or change (s) to the facility:	19A. Latitude & Longitude Coordinates (NAD83, Decimal Degrees to 5 digits):
Standby Emergency Generator	Latitude: 80.27185 Longitude: 39.47808

B: 1ST ALTERNATE OPERATING SITE INFORMATION (only available for G20, G40, & G50 General Permits)

11B. Name of 1st alternate operating site:	12B. Address of 1st alternate operating site:
	Mailing: Physical:

13B. Does the applicant own, lease, have an option to buy, or otherwise have control of the proposed site? ☐ YES ☐ NO

⇨ IF **YES**, please explain:

⇨ IF **NO**, YOU ARE NOT ELIGIBLE FOR A PERMIT FOR THIS SOURCE.

14B. ⇨ For **Modifications or Administrative Updates** at an existing facility, please provide directions to the present location of the facility from the nearest state road;

⇨ For Construction or Relocation permits, please provide directions to the proposed new site location from the nearest state road. Include a **MAP** as **Attachment F**.

_____

_____

_____

15B. Nearest city or town:	16B. County:	17B. UTM Coordinates: Northing (KM): _____ Easting (KM): _____ Zone: _____
18B. Briefly describe the proposed new operation or change (s) to the facility:		19B. Latitude & Longitude Coordinates (NAD83, Decimal Degrees to 5 digits): Latitude: _____ Longitude: _____

C: 2ND ALTERNATE OPERATING SITE INFORMATION (only available for G20, G40, & G50 General Permits):

11C. Name of 2nd alternate operating site:	12C. Address of 2nd alternate operating site: Mailing: _____ Physical: _____

13C. Does the applicant own, lease, have an option to buy, or otherwise have control of the proposed site? ☐ **YES** ☐ **NO**

⇨ IF **YES**, please explain: _____

_____

⇨ IF **NO**, YOU ARE NOT ELIGIBLE FOR A PERMIT FOR THIS SOURCE.

14C. ⇨ For **Modifications or Administrative Updates** at an existing facility, please provide directions to the present location of the facility from the nearest state road;

⇨ For Construction or Relocation permits, please provide directions to the proposed new site location from the nearest state road. Include a **MAP** as **Attachment F**.

_____

_____

_____

15C. Nearest city or town:	16C. County:	17C. UTM Coordinates: Northing (KM): _____ Easting (KM): _____ Zone: _____
18C. Briefly describe the proposed new operation or change (s) to the facility:		19C. Latitude & Longitude Coordinates (NAD83, Decimal Degrees to 5 digits): Latitude: _____ Longitude: _____

20. Provide the date of anticipated installation or change: ____/____/____ ☐ If this is an **After-The-Fact** permit application, provide the date upon which the proposed change did happen: : 12/17/13	21. Date of anticipated Start-up if registration is granted: ____/____/____

22. Provide maximum projected **Operating Schedule** of activity/activities outlined in this application if other than 8760 hours/year. (Note: anything other than 24/7/52 may result in a restriction to the facility's operation).

Hours per day_____ Days per week _____ Weeks per year _____ Percentage of operation _____

SECTION III. ATTACHMENTS AND SUPPORTING DOCUMENTS

23. Include a check payable to WVDEP – Division of Air Quality with the appropriate **application fee** (per 45CSR22 and 45CSR13).

24. Include a **Table of Contents** as the first page of your application package.

All of the required forms and additional information can be found under the Permitting Section (General Permits) of DAQ's website, or requested by phone.

25. Please check all attachments included with this permit application. Please refer to the appropriate reference document for an explanation of the attachments listed below.

- ☑ ATTACHMENT A : CURRENT BUSINESS CERTIFICATE
- ☑ ATTACHMENT B: PROCESS DESCRIPTION
- ☐ ATTACHMENT C: DESCRIPTION OF FUGITIVE EMISSIONS
- ☑ ATTACHMENT D: PROCESS FLOW DIAGRAM
- ☑ ATTACHMENT E: PLOT PLAN
- ☑ ATTACHMENT F: AREA MAP
- ☑ ATTACHMENT G: EQUIPMENT DATA SHEETS AND REGISTRATION SECTION APPLICABILITY FORM
- ☐ ATTACHMENT H: AIR POLLUTION CONTROL DEVICE SHEETS
- ☑ ATTACHMENT I: EMISSIONS CALCULATIONS
- ☐ ATTACHMENT J: CLASS I LEGAL ADVERTISEMENT
- ☐ ATTACHMENT K: ELECTRONIC SUBMITTAL
- ☑ ATTACHMENT L: GENERAL PERMIT REGISTRATION APPLICATION FEE
- ☐ ATTACHMENT M: SITING CRITERIA WAIVER
- ☐ ATTACHMENT N: MATERIAL SAFETY DATA SHEETS (MSDS)
- ☑ ATTACHMENT O: EMISSIONS SUMMARY SHEETS
- ☐ OTHER SUPPORTING DOCUMENTATION NOT DESCRIBED ABOVE (Equipment Drawings, Aggregation Discussion, etc.)

Please mail an original and two copies of the complete General Permit Registration Application with the signature(s) to the DAQ Permitting Section, at the address shown on the front page of this application. Please DO NOT fax permit applications. For questions regarding applications or West Virginia Air Pollution Rules and Regulations, please refer to the website shown on the front page of the application or call the phone number also provided on the front page of the application.

SECTION IV. CERTIFICATION OF INFORMATION

This General Permit Registration Application shall be signed below by a Responsible Official. A Responsible Official is a President, Vice President, Secretary, Treasurer, General Partner, General Manager, a member of a Board of Directors, or Owner, depending on business structure. A business may certify an Authorized Representative who shall have authority to bind the Corporation, Partnership, Limited Liability Company, Association, Joint Venture or Sole Proprietorship. Required records of daily throughput, hours of operation and maintenance, general correspondence, Emission Inventory, Certified Emission Statement, compliance certifications and all required notifications must be signed by a Responsible Official or an Authorized Representative. If a business wishes to certify an Authorized Representative, the official agreement below shall be checked off and the appropriate names and signatures entered. Any administratively incomplete or improperly signed or unsigned Registration Application will be returned to the applicant.

FOR A CORPORATION (domestic or foreign)

☐ I certify that I am a President, Vice President, Secretary, Treasurer or in charge of a principal business function of the corporation

FOR A PARTNERSHIP

☐ I certify that I am a General Partner

FOR A LIMITED LIABILITY COMPANY

☐ I certify that I am a General Partner or General Manager

FOR AN ASSOCIATION

☑ I certify that I am the President or a member of the Board of Directors

FOR A JOINT VENTURE

☐ I certify that I am the President, General Partner or General Manager

FOR A SOLE PROPRIETORSHIP

☐ I certify that I am the Owner and Proprietor

☑ *I hereby certify that* (please print or type) Vicki Dodd *is an Authorized Representative and in that capacity shall represent the interest of the business (e.g., Corporation, Partnership, Limited Liability Company, Association Joint Venture or Sole Proprietorship) and may obligate and legally bind the business. If the business changes its Authorized Representative, a Responsible Official shall notify the Director of the Office of Air Quality immediately, and/or,*

I hereby certify that all information contained in this General Permit Registration Application and any supporting documents appended hereto is, to the best of my knowledge, true, accurate and complete, and that all reasonable efforts have been made to provide the most comprehensive information possible

Signature (please use blue ink) Vicki R. Dodd — Responsible Official — Date 12-10-14

Name & Title (please print or type) Vicki Dodd — Chairman GMPSD

Signature (please use blue ink) Vicki R. Dodd — Authorized Representative (if applicable) — Date 12-10-14

Applicant's Name Greater Marion Public Service District

Phone & Fax 304-287-2244 (Phone) — 304-287-2244 (Fax)

Email mommaredsquirrel@msn.com

RECEIVED
JAN - 7 2015
WV DEP / DIV. OF AIR QUALITY

ATTACHMENT A

CURRENT BUSINESS CERTIFICATE

WEST VIRGINIA
STATE TAX DEPARTMENT
BUSINESS REGISTRATION CERTIFICATE

ISSUED TO:
GREATER MARION PUBLIC SERVICE DISTRICT
44 ABERDEAN DR
WORTHINGTON, WV 26591-9047

BUSINESS REGISTRATION ACCOUNT NUMBER: **2237-4673**

This certificate is issued on: 03/20/2013

This certificate is issued by
the West Virginia State Tax Commissioner
in accordance with Chapter 11, Article 12, of the West Virginia Code

The person or organization identified on this certificate is registered to conduct business in the State of West Virginia at the location above.

This certificate is not transferrable and must be displayed at the location for which issued.

This certificate shall be permanent until cessation of the business for which the certificate of registration was granted or until it is suspended, revoked or cancelled by the Tax Commissioner.

Change in name or change of location shall be considered a cessation of the business and a new certificate shall be required.

TRAVELING/STREET VENDORS: Must carry a copy of this certificate in every vehicle operated by them. CONTRACTORS, DRILLING OPERATORS, TIMBER/LOGGING OPERATIONS: Must have a copy of this certificate displayed at every job site within West Virginia.

atL006 v.4
L0994700160

ATTACHMENT B

PROCESS DESCRIPTION

ATTACHMENT B
PROCESS DESCRIPTION

The Greater Marion Public Service District's (GMPSD's) sewer collection system utilizes two sewer pump stations to transfer sewage throughout the collection system and eventually to the Town of Worthington's Waste Water Treatment Plant for treatment and discharge into the West Fork River.

The Idamay sewer pump station is located between Rt. 218 and Idamay Camp road in the town of Idamay. It collects gravity sewer flow from Idamay and transfers it to the Town of Carolina for further transfer. Approximately 217 customers are served by the pump station for a design pump flow of 130 GPM @ 370' Total Dynamic Head. The sewer pumps are of the wet-well mounted vacuum-prime type capable of handling up to 3" diameter solids. The pump station consists of two pump pairs of two pumps each, with each pair of pumps operating in series and pumping into dedicated force mains to the discharge point located in the Town of Carolina. The pumps utilize 3-phase, 480 Volt electrical power to operate the 4 - 50 Horsepower pump motors.

The Carolina sewer pump station is located along the southwest side of Main Street in the town of Carolina. It collects gravity sewer flow from Carolina in addition to all sewer flow from the Idamay pump station and then transfers it to the Town of Worthington's Waste Water Treatment Plant for treatment. Approximately 189 customers in Carolina and 217 customers in Idamay (406 sewer customers total) are served by the pump station for a design pump flow of 250 GPM @ 100' Total Dynamic Head. The sewer pumps are of the submersible non-clog type capable of passing up to 3" diameter solids. The pumps utilize 3-phase, 480 Volt electrical power to operate the 25 Horsepower pump motors.

During normal operating conditions, 3-phase electrical power is supplied to the pump stations via Mon Power's public grid. The three phases are provided via pole mounted transformers on the power company's nearest service pole. Electrical power travels from the transformers to an electric service disconnect switch, then to an outdoor C.T. cabinet and electric meter mounted on the exterior of the pump station building, main circuit breaker, automatic transfer switch, main breaker panel inside the building, and finally to the pump station control panel that controls when to send power to the pump(s) for operation.

During the event of an electrical power outage from the power company's grid, the automatic transfer switch automatically detects the loss of voltage and transfers the pump station over to run off of emergency generator power supply. The transfer switch automatically disconnects the pump station from the public power grid and starts the emergency generator, providing emergency electric power to the entire pump station during the power outage. Electrical power is produced by the emergency generator, travels from the generator to the automatic transfer switch, then to the main breaker panel inside the pump station building, and finally to the pump station control panel that controls when to send power to the pump(s) for operation. Once the power outage is resolved and electric power is restored to the pump station site via the power company, the automatic transfer switch transfers power supply back to the public grid and shuts down the emergency generator and the pump station is restored to normal operating conditions.

The emergency generator is also configured to "exercise" itself at given intervals determined by the owner (typically once a week). This is part of an operation & maintenance regimen to help keep the generator in good operating condition.

The compression-ignition diesel engine operates under the EPA New Source Performance Standards (NSPS), 40 CFR Part 60 exhaust emission levels. The NSPS allows for 100 hours per year for testing/maintenance/emergency demand response (DR). Although under the NSPS true emergency use is unlimited, the total use of the engines including true emergencies is limited to 500 hours per year as per the WV DEP General Permit.

ATTACHMENT D

PROCESS FLOW DIAGRAM

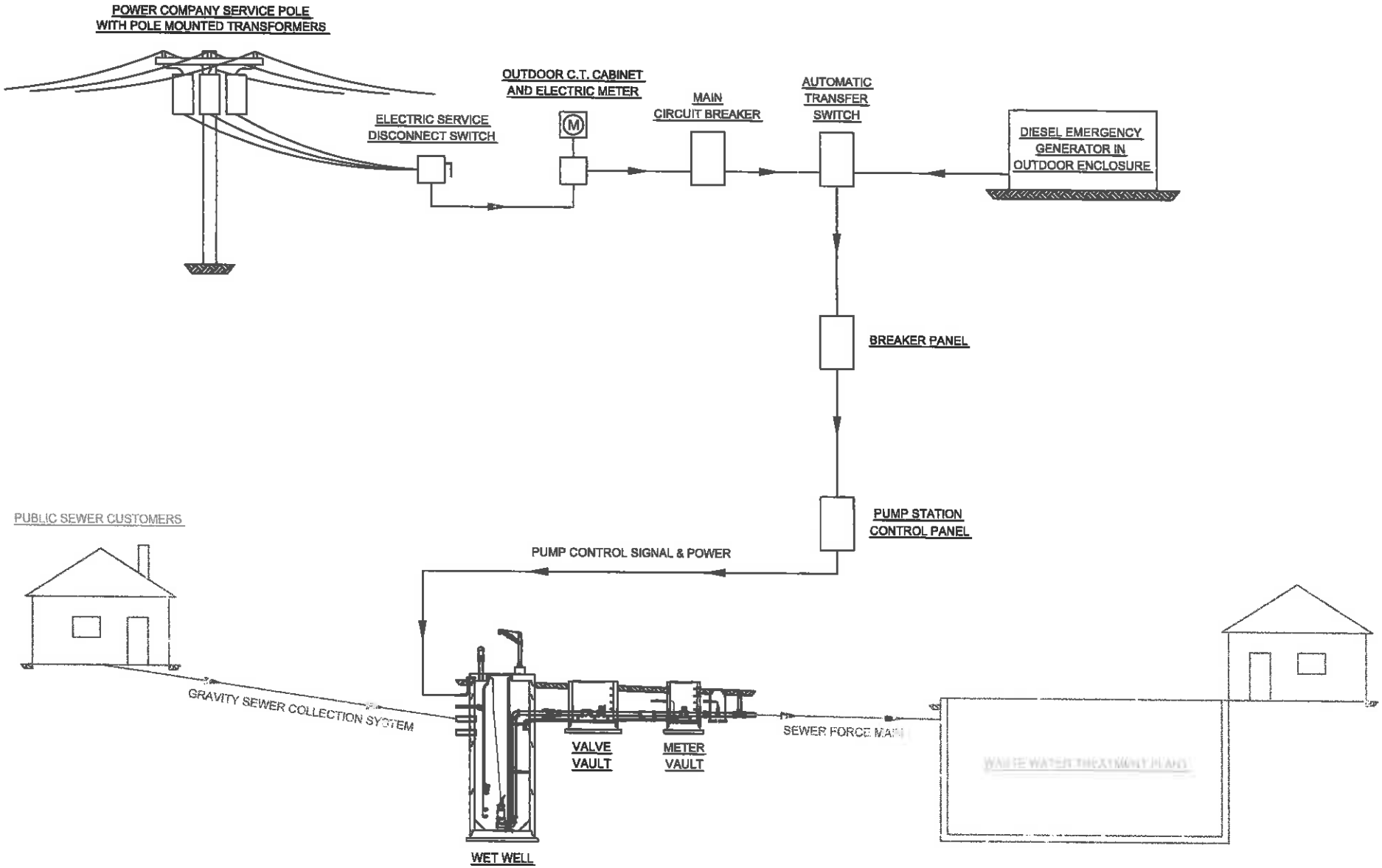

PUMP STATION PROCESS FLOW DIAGRAM

NOT TO SCALE

RK&K ENGINEERS
RUMMEL, KLEPPER & KAHL, LLP
1 GRAND CENTRAL PARK, SUITE 2040
KEYSER, WEST VIRGINIA 26726
T - 304.788.3370 F - 304.788.3577
www.rkk.com

JUNE 4, 2014
DESIGNED MJY
DRAWN MJY
CHECKED

REVISIONS

GREATER MARION PSD
44 ABERDEAN DR.
WORTHINGTON, WV 26591

CAROLINA AND IDAMAY SEWER
SYSTEM REPLACEMENT PROJECT
CAROLINA PUMP STATION

PROCESS FLOW DIAGRAM

DRAWING
NO. 1
OF 1

ATTACHMENT E

PLOT PLAN

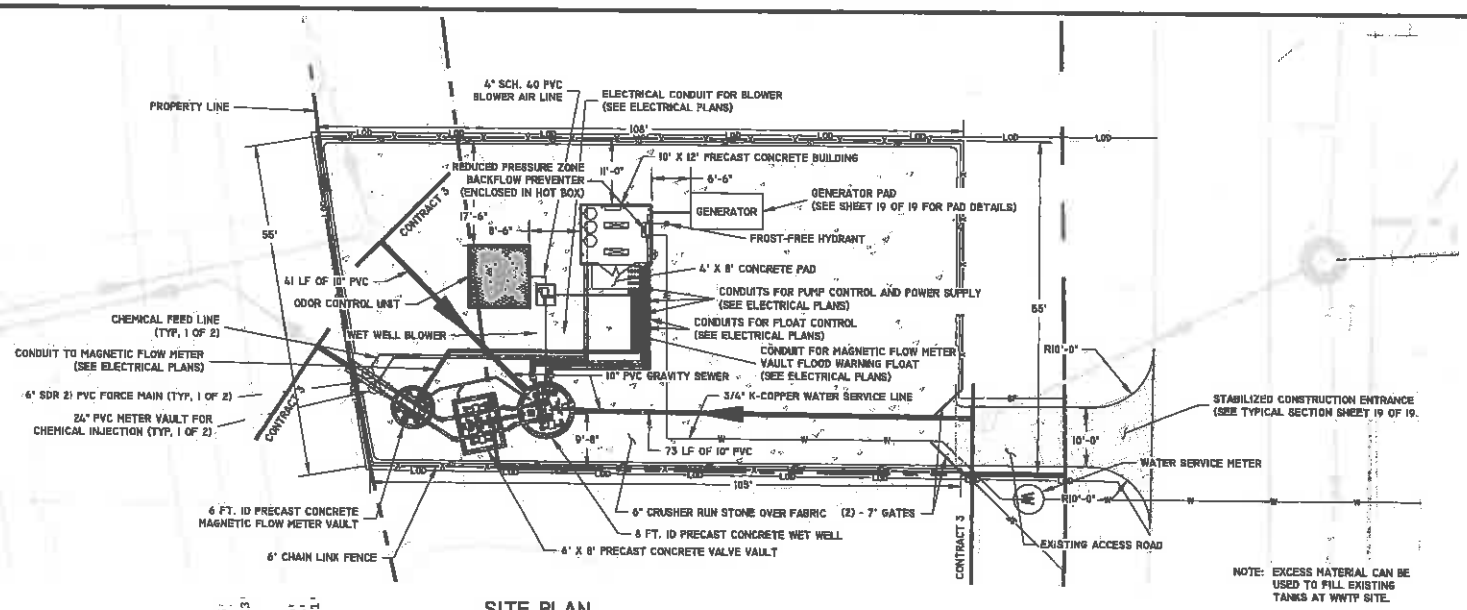

NOTE: EXCESS MATERIAL CAN BE USED TO FILL EXISTING TANKS AT WWTP SITE.

SITE PLAN

SCALE: 1" = 10'

LEGEND

—W—W—	POTABLE WATER
—X—X—X—	CHAIN LINK FENCE
—SF—	SILT FENCE
—LOD—	LIMITS OF DISTURBANCE

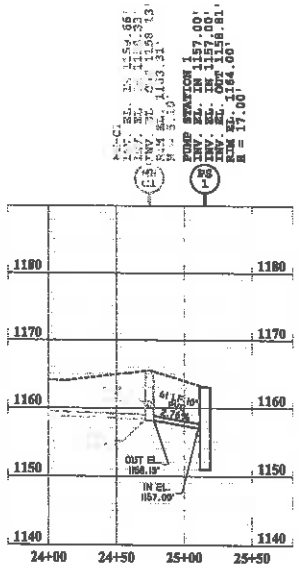

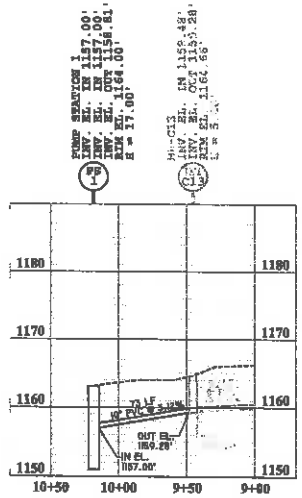

NOTE: CONTRACTOR SHALL COORDINATE INSTALLATION OF WATER SERVICE WITH TOWN OF MONONGAH. TAP FEES WILL BE PAID BY PSD.

PROFILES

RK&K:\(2005) PROJECTS\1105-11_GREATER MARION PSD\ACAD\PUMP_STATIONS\CAROLINA_P.S._PLAN_&_PROFILE.DWG
DATE: APRIL 27, 2012
SCALE: 1 = 1
PROJECT NO. 1105-11

RK&K ENGINEERS	RUMMEL, KLEPPER & KAHL, LLP 1 GRAND CENTRAL PARK, SUITE 2040 KEYSER, WEST VIRGINIA 26726 T - 304.788.3370 F - 304.788.3577 www.rkk.com	DESIGNED BJF DRAWN BJF CHECKED DGV	REVISIONS	GREATER MARION PUBLIC SERVICE DISTRICT 44 ABERDEAN DR. WORTHINGTON, WV 26591	SEWER SYSTEM REPLACEMENT PROJECT CONTRACT 3	CAROLINA PUMP STATION SITE PLAN AND PROFILE	DRAWING NO. 3 OF 19

PUMP DATA

250 GPM @ 100' TDH

FLYGT PUMP DATA:	MYERS PUMP DATA:
MODEL NP-3153.091	MODEL 4VEX200MA-43
4"Ø DISCHARGE	4"Ø DISCHARGE
EXPLOSION PROOF	EXPLOSION PROOF
FLYGT MOTOR ELECTRICAL DATA:	**MYERS MOTOR ELECTRICAL DATA:**
PHASES - 3	PHASES - 3
POWER - 20 HP	POWER - 20 HP
FREQUENCY - 60 HZ	FREQUENCY - 60 HZ
VOLTAGE - 480	VOLTAGE - 480
STARTING CURRENT - 148 AMPS	STARTING CURRENT - 145 AMPS
RUN CURRENT - 26 AMPS	RUN CURRENT - 30 AMPS
SPEED - 1755 RPM	SPEED - 1750 RPM

NOTES:
1. A SPOOL PIECE MATCHING THE LENGTH OF THE FLOW METER SHALL BE FURNISHED TO ALLOW EASY REMOVAL OF FLOW METER FOR SERVICE, ETC.
2. FOR CLARITY PURPOSES, PIPING HAS BEEN ROTATED TO THIS VIEW. ACTUAL LOCATIONS MAY VARY. SEE SITE PLAN.
3. ANCHOR PIPE AND RAILING IN WET WELL PER MANUFACTURER'S RECOMMENDATIONS. USE 316 STAINLESS STEEL HARDWARE.
4. ELECTRICAL CONDUIT SHOWN FOR INFORMATION ONLY. SEE ELECTRICAL DRAWINGS SHEET 12 THRU 18 OF 19.
5. ALL IN-GROUND PIPE JOINTS SHALL BE MECHANICAL JOINT W/ MEGALUG JOINT RESTRAINTS. ALL PIPE JOINTS LOCATED IN VAULTS AND OUT OF GROUND SHALL BE FLANGE JOINT.
6. GROUT SLOPE BOTTOM OF VAULTS TOWARD DRAINS.
7. ADEQUATELY SUPPORT ALL VALVES AND PIPING IN VAULTS WITH PROPER PIPE SUPPORTS.
8. BOTTOM OF VAULT DRAIN INVERTS SHALL BE FLUSH WITH TOP OF VAULT FLOORS.

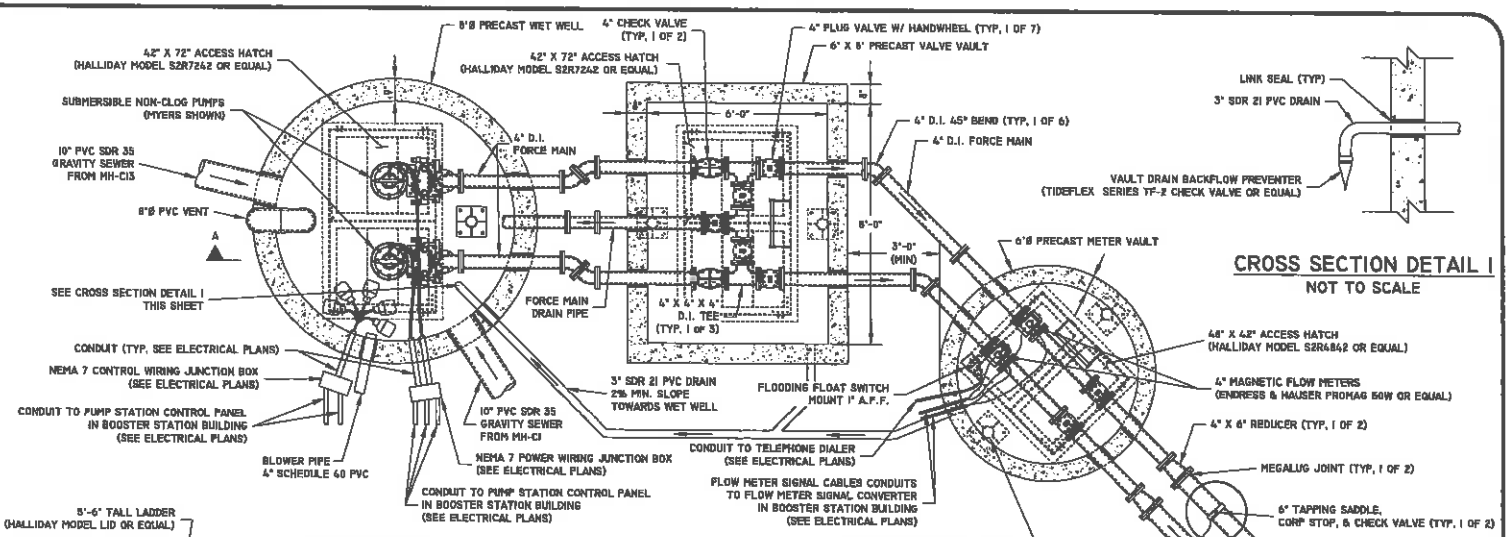

PLAN - GENERAL ARRANGEMENT

SCALE: 1/4" = 1'

CROSS SECTION DETAIL 1

NOT TO SCALE

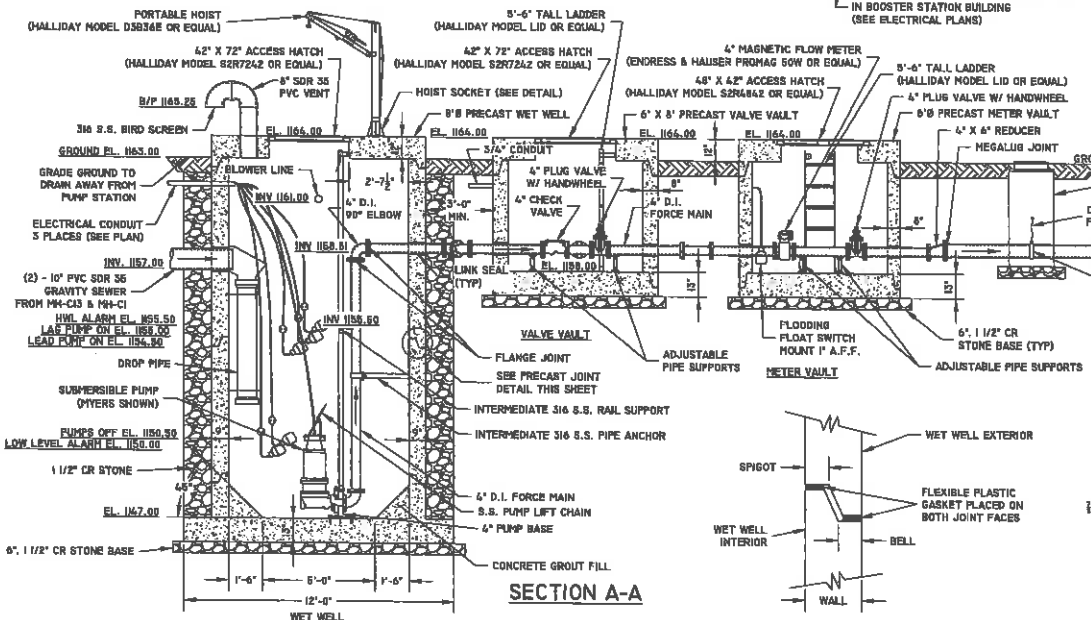

SECTION A-A

SCALE: 3/8" = 1'

PRECAST JOINT DETAIL

NOT TO SCALE

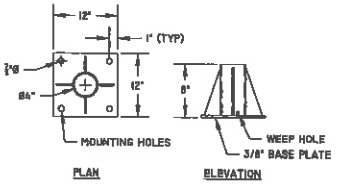

PORTABLE HOIST SOCKET DETAIL

NOT TO SCALE

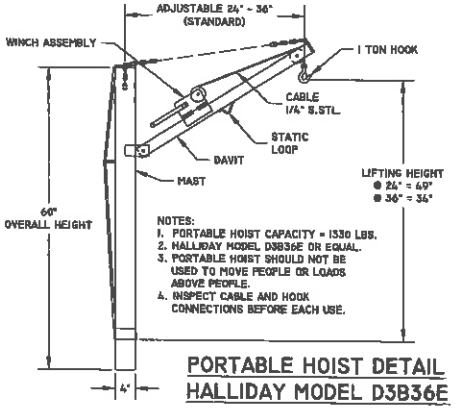

NOTES:
1. PORTABLE HOIST CAPACITY = 1330 LBS.
2. HALLIDAY MODEL D3B36E OR EQUAL.
3. PORTABLE HOIST SHOULD NOT BE USED TO MOVE PEOPLE OR LOADS ABOVE PEOPLE.
4. INSPECT CABLE AND HOOK CONNECTIONS BEFORE EACH USE.

PORTABLE HOIST DETAIL HALLIDAY MODEL D3B36E

NOT TO SCALE

RK&K:\(2005) PROJECTS\1105-IN_GREATER MARION PSD\ACAD\PUMP_STATION\CAROLINA_P.S._MECHANICAL.DWG
DATE: APRIL 27, 2012
SCALE: 1 = 1
PROJECT NO. 1105-01

RK&K ENGINEERS
RUMMEL, KLEPPER & KAHL, LLP
1 GRAND CENTRAL PARK, SUITE 2040
KEYSER, WEST VIRGINIA 26726
T - 304.788.3370 F - 304.788.3577
www.rkk.com

DESIGNED BJF
DRAWN BJF
CHECKED DGV

REVISIONS

GREATER MARION PUBLIC SERVICE DISTRICT
44 ABERDEAN DR.
WORTHINGTON, WV 26591

SEWER SYSTEM REPLACEMENT PROJECT CONTRACT 3

CAROLINA PUMP STATION MECHANICAL PLAN & SECTIONS

DRAWING NO. 5 OF 19

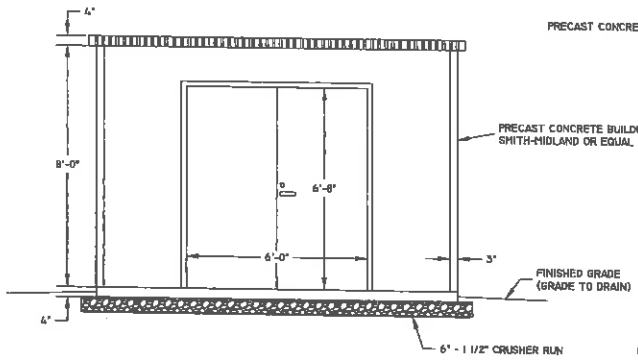

FRONT ELEVATION

SCALE: 1/4" = 1'

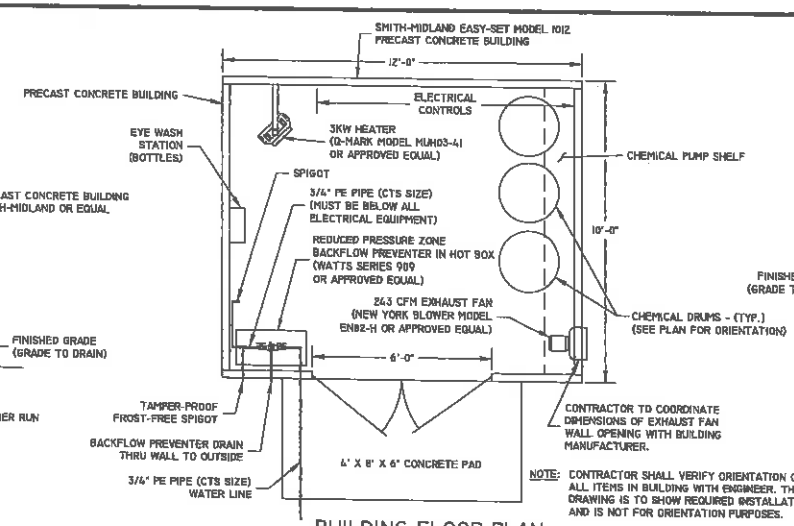

NOTE: CONTRACTOR SHALL VERIFY ORIENTATION OF ALL ITEMS IN BUILDING WITH ENGINEER. THIS DRAWING IS TO SHOW REQUIRED INSTALLATION AND IS NOT FOR ORIENTATION PURPOSES.

BUILDING FLOOR PLAN

SCALE: 1/4" = 1'

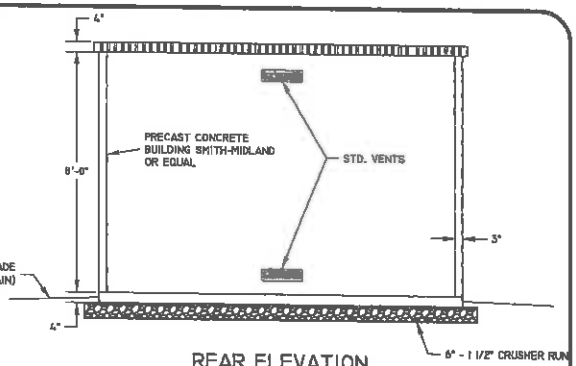

REAR ELEVATION

SCALE: 1/4" = 1'

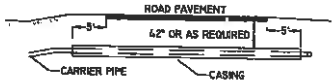

TYPICAL ROAD CROSSING SECTION

NOT TO SCALE

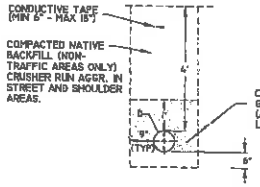

BEDDING DETAIL - PVC & COPPER PIPE

NOT TO SCALE

SURFACE REPAIR TO MATCH EXISTING SURFACE CONDITIONS IN STREETS, ROADS, AND DRIVEWAYS. CONSTRUCT PER TRENCH DETAILS A THRU E.

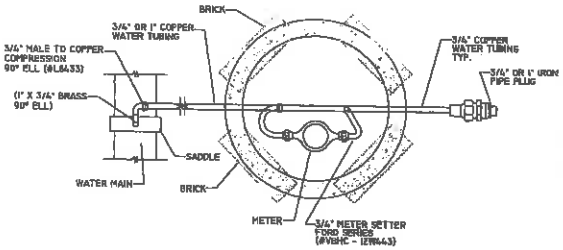

PLAN VIEW

NOTE: CHEMICAL FEED PUMP SHALL BE CONTROLLED BY A SIGNAL FROM PUMP CONTROL PANEL.

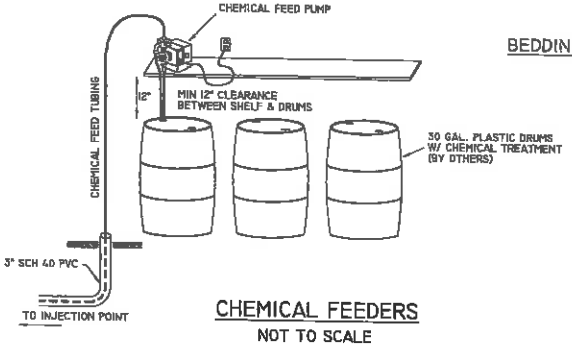

CHEMICAL FEEDERS

NOT TO SCALE

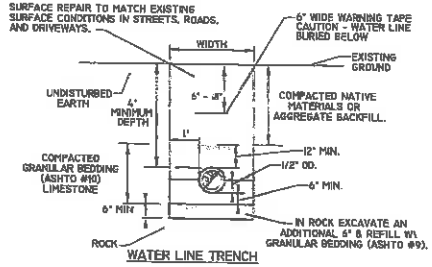

WATER LINE TRENCH

NOTES:

1. W = MAXIMUM PERMISSIBLE TRENCH WIDTH, BASED UPON, W = O.D. + 24", UNLESS APPROVED BY THE ENGINEER.
2. TRENCHES TO BE SHEETED AND BRACED AS REQUIRED.
3. PROVIDE BEARING FOR FULL LENGTH OF BARREL, DIG HOLES FOR THE BELL.
4. BACKFILL TO BE COMPACTED IN 6" LAYERS TO 95% OF MAXIMUM DENSITY AT OPTIMUM MOISTURE (±2%) IN ROADS AND STREETS. COMPACT TO MATCH EXISTING GROUND IN OTHER AREAS.
5. MAINTAIN MINIMUM OF 4' OF COVER TO THE TOP OF PIPE.
6. A CASING PIPE SHALL BE REQUIRED IN ROAD CROSSINGS WHERE SHOWN ON PLANS

WATER LINE TRENCH DETAIL

NOT TO SCALE

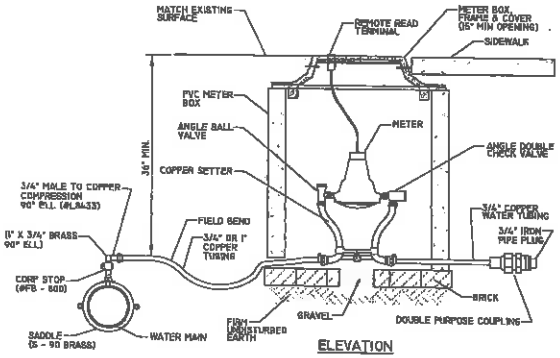

ELEVATION

NOTE: ALL BOLTS TO BE STAINLESS STEEL

METERED CONNECTION DETAIL

NOT TO SCALE

RK&K:\T:\DATA\PROJECTS\1185-RL_GREATER MARION PSD\ACAD\DRAWINGS\PUMP_STATIONS\P.S._DETAILS.DWG
DATE: APRIL 26, 2012
SCALE: 1 = 1
PROJECT NO. 1106-00

RK&K ENGINEERS
RUMMEL, KLEPPER & KAHL, LLP
1 GRAND CENTRAL PARK, SUITE 2040
KEYSER, WEST VIRGINIA 26726
T - 304.788.3370 F - 304.788.3577
www.rkk.com

DESIGNED DGV
DRAWN BJF
CHECKED DGV

REVISIONS

GREATER MARION PUBLIC SERVICE DISTRICT
44 ABERDEAN DR.
WORTHINGTON, WV 26591

SEWER SYSTEM REPLACEMENT PROJECT CONTRACT 3

PUMP STATION DETAILS

DRAWING NO. 10 OF 19

ELECTRICAL ABBREVIATIONS

A	-	AMPERES
A.F.F.	-	ABOVE FINISHED FLOOR
ATS	-	AUTOMATIC TRANSFER SWITCH
C	-	CONDUIT
D	-	DEEP
DC	-	DIRECT CURRENT
DISC.	-	DISCONNECT
DWG.	-	DRAWING
G.F.I.	-	GROUND FAULT INTERRUPTER
GRD.	-	GROUND
H	-	HIGH
HP	-	HORSEPOWER
KW	-	KILOWATT
MA	-	MILLIAMP
NO.	-	NUMBER
P	-	POLE
PH	-	PHASE
PR.	-	PAIR
SHLD.	-	SHIELDED
SN	-	SOLID NEUTRAL
S.S.	-	STAINLESS STEEL
TYP.	-	TYPICAL
V	-	VOLTS
VFD	-	VARIABLE FREQUENCY DRIVE
W	-	WIRE, WATT, WIDE
WP	-	WEATHERPROOF

CONTROL WIRING LEGEND

- 3 POSITION SELECTOR SWITCH (X INDICATES CLOSED POSITION)
- NORMALLY OPEN CONTACT
- NORMALLY CLOSED CONTACT
- CR — CONTROL RELAY
- PUSH BUTTON
- SELECTOR SWITCH
- FUSE
- PILOT LIGHT - LENS COLOR IS INDICATED BY LETTER INSIDE
  - A - AMBER
  - B - BLUE
  - G - GREEN
  - R - RED
  - W - WHITE
- ETM — ELAPSED TIME METER
- 480V / 120V — CONTROL TRANSFORMER
- MOTOR STARTER
- THERMAL OVERLOAD

ELECTRICAL SYMBOL SCHEDULE

	-	FLUORESCENT LIGHT FIXTURE
	-	20A-120V DUPLEX RECEPTACLE
	-	TELEPHONE OUTLET
(5)	-	MOTOR (NUMBER INDICATES HP)
(J)	-	JUNCTION BOX
(T)	-	THERMOSTAT
T	-	TRANSFORMER
S	-	SINGLE POLE SWITCH
S_T	-	MANUAL STARTER SWITCH
	-	HOME RUN TO PANEL
	-	TICKS INDICATE NUMBER OF WIRES - NOT INCLUDING GROUND CONDUCTOR
	-	WIRING CONCEALED IN CONDUIT
	-	CIRCUIT BREAKER
	-	EXIT FIXTURE
	-	BATTERY EMERGENCY LIGHT FIXTURE

GENERAL ELECTRICAL NOTES

(APPLICABLE TO ALL DRAWINGS)

1. ALL FASTENERS AND MOUNTING HARDWARE USED FOR THE INSTALLATION OF ALL ELECTRICAL ITEMS SHALL BE 316 STAINLESS STEEL.
2. WHERE ELECTRICAL EQUIPMENT IS SHOWN MOUNTED ON A CONCRETE PAD, THE PAD SHALL BE 3" HIGH WITH CHAMFERED EDGES. THE PAD SHALL EXTEND 2" BEYOND THE EDGES OF THE EQUIPMENT, UNLESS NOTED OTHERWISE.
3. CONTRACTOR SHALL COORDINATE THE EXACT LOCATION OF ALL UNDERGROUND CONDUITS TO AVOID INTERFERENCES WITH UNDERGROUND PIPING.
4. CONTRACTOR SHALL FURNISH AND INSTALL A SEPARATE INSULATED GROUND CONDUCTOR IN ALL CONDUITS. ALL GROUND CONDUCTORS SHALL BE #12 UNLESS NOTED OTHERWISE ON DRAWINGS.
5. PROVIDE ELECTRICAL EQUIPMENT WITH A MINIMUM SHORT CIRCUIT RATING OF 35,000 AMPERES. CONTACT THE POWER COMPANY PRIOR TO SUBMITTING SHOP DRAWINGS AND VERIFY THE AVAILABLE FAULT CURRENT. NOTIFY THE OWNER IN WRITING, SUBMIT THE POWER COMPANY'S LETTER FOR APPROVAL AND PROVIDE POWER EQUIPMENT SUITABLY BRACED.

GENERATOR NOTES

1. COORDINATE SIZE OF CONCRETE PAD WITH THE ACTUAL GENERATOR BEING FURNISHED.

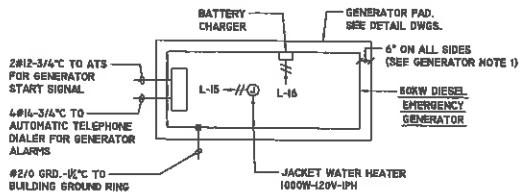

CAROLINA PUMP STATION GENERATOR ELECTRICAL PLAN

3/8"=1'-0"

SITE PLAN NOTES

1. COORDINATE INSTALLATION OF ELECTRIC SERVICE WITH ALLEGHANY POWER.
2. SEE ELECTRICAL PLANS FOR SITE WIRING.

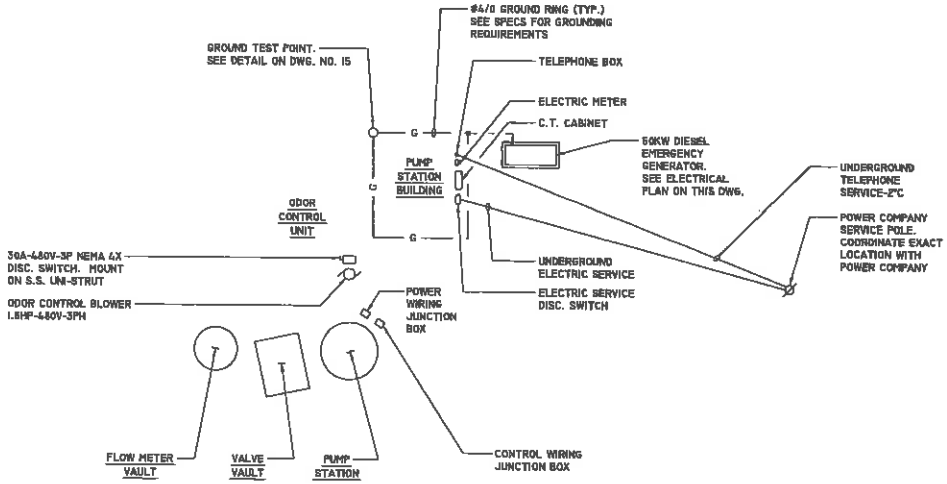

CAROLINA PUMP STATION ELECTRICAL SITE PLAN

1"=10'

RK&K ENGINEERS
RUMMEL, KLEPPER & KAHL, LLP
1 GRAND CENTRAL PARK, SUITE 2040
KEYSER, WEST VIRGINIA 26726
T - 304.788.3370 F - 304.788.3577
www.rkk.com

DESIGNED SHJ
DRAWN SHJ
CHECKED DTB

REVISIONS

GREATER MARION PUBLIC SERVICE DISTRICT
44 ABERDEAN DR.
WORTHINGTON, WV 26591

SEWER SYSTEM REPLACEMENT PROJECT CONTRACT 3

ELECTRICAL ABBREVIATIONS, SYMBOLS, NOTES AND CAROLINA PUMP STATION ELECTRICAL SITE PLAN

DRAWING NO. 12 OF 19

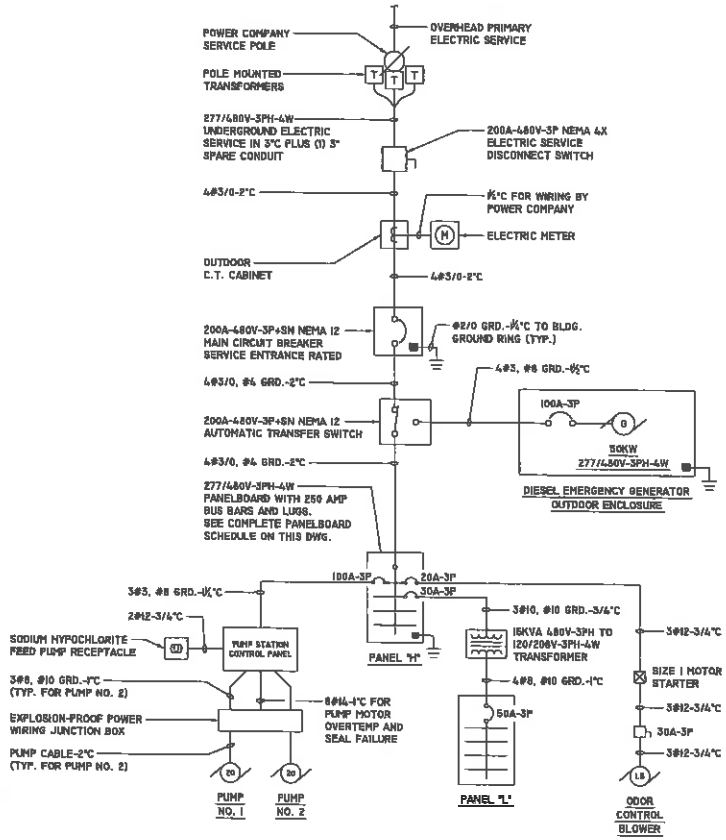

ELECTRICAL ONE-LINE DIAGRAM

PANELBOARD "H" SCHEDULE

VOLTAGE: 277/480V-3PH-4W
MAIN BUS BARS AND LUGS: 250A
MAIN BREAKER: NONE

PANEL TYPE: SURFACE MOUNTED, BREAKER
MIN. A.I.C. RATING: 25,000
LOCATION: PUMP STATION BUILDING

NOTES	HP	WATTS	LOCATION	POLE	AMP/TRIP			AMP/TRIP	POLE	LOCATION	WATTS	HP	NOTES
PUMP STATION CONTROL PANEL	40		BLDG.	3	100	1	2	20	3	OUTSIDE		1.3	ODOR CONTROL BLOWER
PANEL "L" TRANSFORMER		15,000	BLDG.	3	30	7	8	20	3				SPARE
SPACE						13	14						SPACE
SPACE						19	20						SPACE
SPACE						25	26						SPACE

PANELBOARD "L" SCHEDULE

VOLTAGE: 120/208V-3PH-4W
MAIN BUS BARS AND LUGS: 100A
MAIN BREAKER: 50A-3P

PANEL TYPE: SURFACE MOUNTED, BREAKER
MIN. A.I.C. RATING: 10,000
LOCATION: PUMP STATION BUILDING

NOTES	HP	WATTS	LOCATION	POLE	AMP/TRIP			AMP/TRIP	POLE	LOCATION	WATTS	HP	NOTES
LIGHTS		400	BLDG.	1	20	1	2	20	1	OUTSIDE	150		EXTERIOR LIGHT
RECEPTACLE		200	BLDG.	1	20	3	4	20	1	OUTSIDE	200		RECEPTACLE
FORCE MAIN NO. 1 CIRCULAR CHART RECORDER		200	BLDG.	1	20	5	6	20	1	BLDG.	200		FORCE MAIN NO. 2 CIRCULAR CHART RECORDER
FORCE MAIN NO. 1 FLOW METER SIGNAL CONVERTER		200	BLDG.	1	20	7	8	20	1	BLDG.	200		FORCE MAIN NO. 2 FLOW METER SIGNAL CONVERTER
AUTOMATIC TELEPHONE DIALER		200	BLDG.	1	20	9	10	20	1	BLDG.		1/20	EXHAUST FAN
UNIT HEATER		3000	BLDG.	2	30	11	12	20	1				SPARE
							14	20	1				SPARE
JACKET WATER HEATER		1000	GEN.	1	20	13	16	20	1	GEN.	200		BATTERY CHARGER
SPARE				1	20	17	18	20	1				SPARE

RK&K ENGINEERS
RUMMEL, KLEPPER & KAHL, LLP
1 GRAND CENTRAL PARK, SUITE 2040
KEYSER, WEST VIRGINIA 26726
T - 304.788.3370 F - 304.788.3577
www.rkk.com

DESIGNED SMJ
DRAWN SMJ
CHECKED DTB

REVISIONS

GREATER MARION PUBLIC SERVICE DISTRICT
44 ABERDEAN DR.
WORTHINGTON, WV 26591

SEWER SYSTEM REPLACEMENT PROJECT CONTRACT 3

CAROLINA PUMP STATION ELECTRICAL ONE-LINE DIAGRAM AND PANELBOARD SCHEDULES

DRAWING NO. 13 OF 19

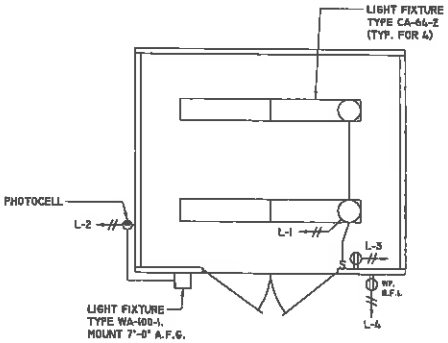

PUMP STATION BUILDING LIGHTING AND RECEPTACLE PLAN

3/8"=1'-0"

NOTES

1. ALL CONDUIT IN THE WET WELL AND FLOW METER VAULT SHALL BE PVC COATED GALVANIZED RIGID STEEL.

WIRING LEGEND

1. 277/480V-3PH-4W UNDERGROUND ELECTRIC SERVICE IN 3"C PLUS ONE (1) 3" SPARE CONDUIT TO TRANSFORMERS ON POWER COMPANY SERVICE POLE
2. TELEPHONE SERVICE-2"C
3. 8#14-3/4"C TO AUTOMATIC TELEPHONE DIALER
4. 1 PR. #18 SHLD.-3/4"C TO FORCE MAIN NO. 1 CIRCULAR CHART RECORDER
5. 1 PR. #16 SHLD.-3/4"C TO FORCE MAIN NO. 2 CIRCULAR CHART RECORDER
6. FLOAT SWITCH CABLES-2"C
7. 10#14-1"C TO PUMP STATION CONTROL PANEL
8. PUMP CABLE-2"C
9. 2#14-3/4"C TO AUTOMATIC TELEPHONE DIALER
10. FLOW METER SIGNAL CABLES IN (2) 3/4" CONDUITS TO FLOW METER SIGNAL CONVERTERS IN PUMP STATION BUILDING

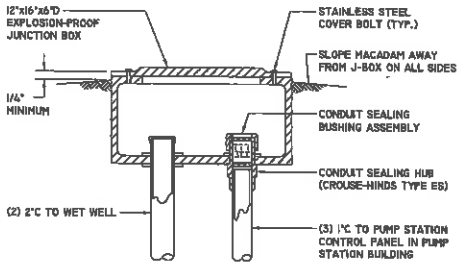

POWER WIRING JUNCTION BOX DETAIL

NO SCALE

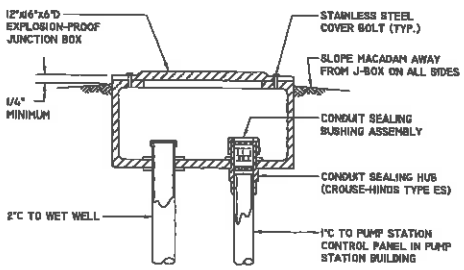

CONTROL WIRING JUNCTION BOX DETAIL

NO SCALE

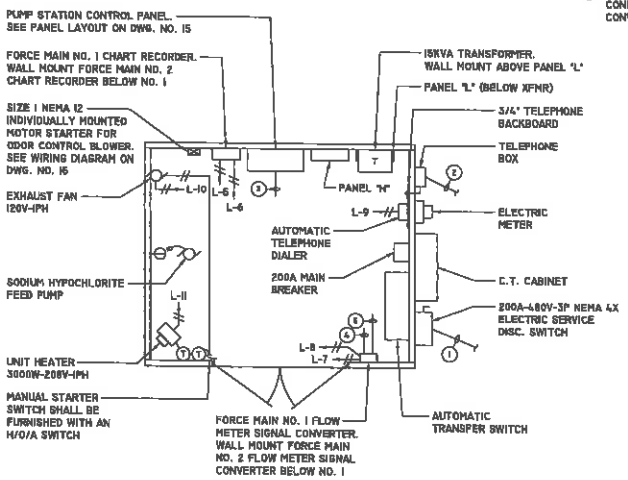

PUMP STATION BUILDING POWER PLAN

3/8"=1'-0"

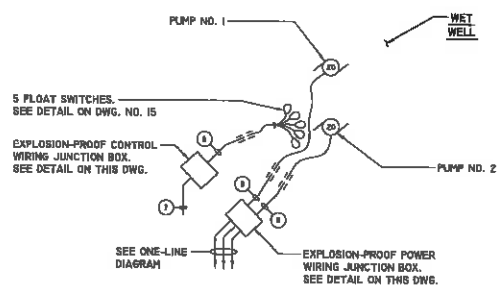

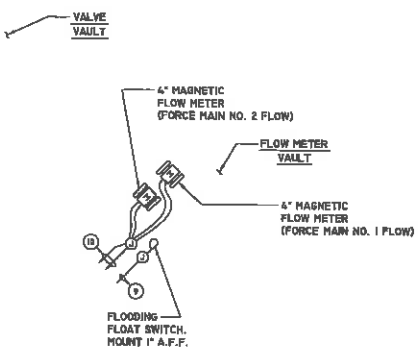

PUMP STATION ELECTRICAL PLAN

3/8"=1'-0"

RK&K ENGINEERS
RUMMEL, KLEPPER & KAHL, LLP
1 GRAND CENTRAL PARK, SUITE 2040
KEYSER, WEST VIRGINIA 26726
T - 304.788.3370 F - 304.788.3577
www.rkk.com

DESIGNED SMJ
DRAWN SMJ
CHECKED DTB

REVISIONS

GREATER MARION PUBLIC SERVICE DISTRICT
44 ABERDEAN DR.
WORTHINGTON, WV 26591

SEWER SYSTEM REPLACEMENT PROJECT CONTRACT 3

CAROLINA PUMP STATION ELECTRICAL PLANS

DRAWING NO. 14 OF 19

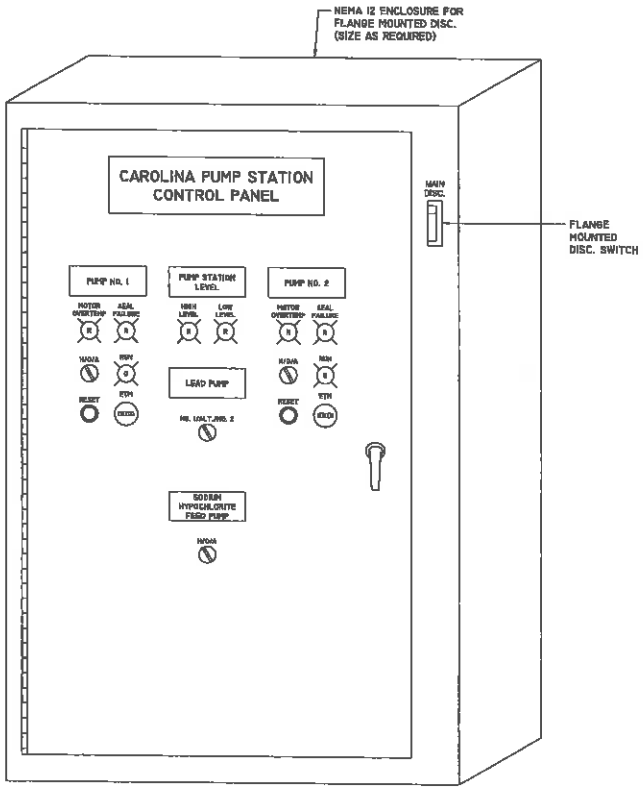

CAROLINA PUMP STATION CONTROL PANEL
PANEL LAYOUT

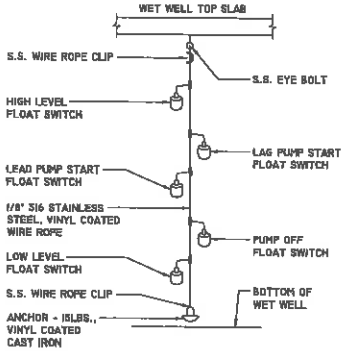

FLOAT SWITCH MOUNTING DETAIL
NO SCALE

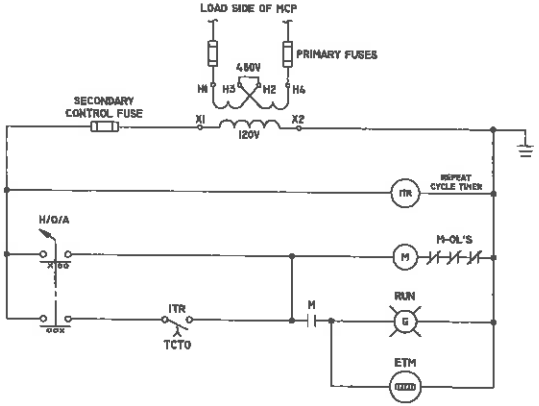

ODOR CONTROL BLOWER
CONTROL WIRING DIAGRAM

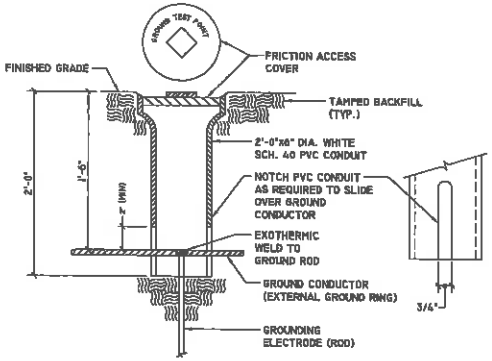

GROUND TEST POINT DETAIL
NO SCALE

RK&K ENGINEERS
RUMMEL, KLEPPER & KAHL, LLP
1 GRAND CENTRAL PARK, SUITE 2040
KEYSER, WEST VIRGINIA 26726
T - 304.788.3370 F - 304.788.3577
www.rkk.com

DESIGNED SMJ
DRAWN SMJ
CHECKED DTB

REVISIONS

GREATER MARION PUBLIC SERVICE DISTRICT
44 ABERDEAN DR.
WORTHINGTON, WV 26591

SEWER SYSTEM REPLACEMENT PROJECT CONTRACT 3

CAROLINA PUMP STATION CONTROL PANEL AND ELECTRICAL DETAILS

DRAWING NO. 15 OF 19

ATTACHMENT F

AREA MAP

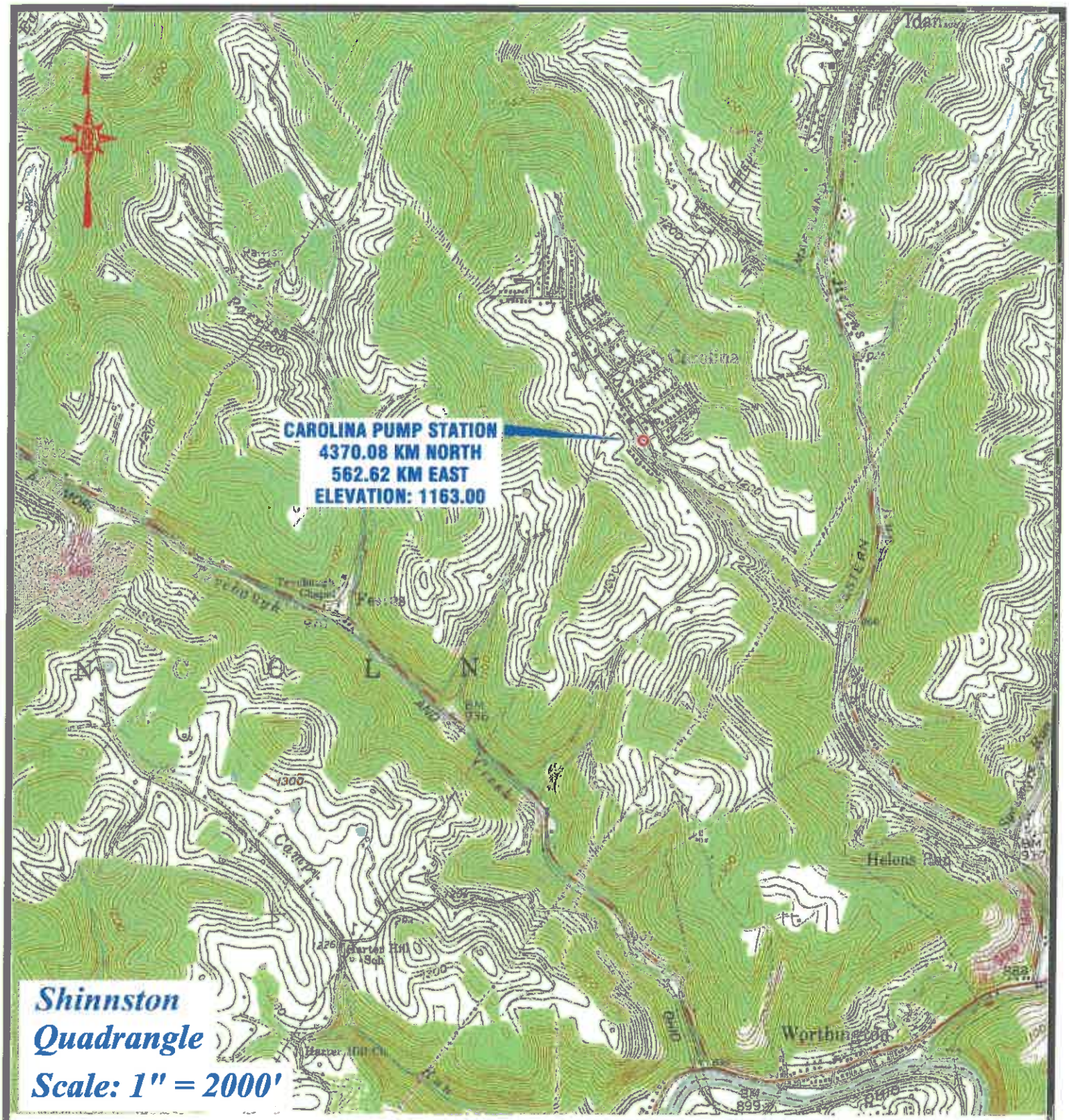

Emergency Generator Permit G65-C
Greater Marion Public Service District

RUMMEL, KLEPPER & KAHL, LLP
242 North Tornado Way, Suite 1
KEYSER, WEST VIRGINIA 26726 304-788-3370

ATTACHMENT G

EQUIPMENT DATA SHEETS AND REGISTRATION SECTION APPLICABILITY FORM

General Permit G65-C Registration
Section Applicability Form

General Permit G65-C was developed to allow qualified registrants to seek registration for emergency generator(s).

General Permit G65-C allows the registrant to choose which sections of the permit that they wish to seek registration under. Therefore, please mark which sections that you are applying for registration under. Please keep in mind, that if this registration is approved, the issued registration will state which sections will apply to your affected facility.

Section 5	Reciprocating Internal Combustion Engines (R.I.C.E.)*	☑
Section 6	Tanks	☑
Section 7	Standards of Performance for Stationary Compression Ignition Internal Combustion Engines (40CFR60 Subpart IIII)	☑
Section 8	Standards of Performance for Stationary Spark Ignition Internal Combustion Engines (40CFR60 Subpart JJJJ)	☐

* **Affected facilities that are subject to Section 5 may also be subject to Sections 7 or 8. Therefore, if the applicant is seeking registration under both sections, please select both.**

EMERGENCY GENERATOR ENGINE DATA SHEET

Source Identification Number[1]		EG-1
Engine Manufacturer and Model		John Deere 4024HF285B
Manufacturer's Rated bhp/rpm		80/60
Source Status[2]		NS
Date Installed/Modified/Removed[3]		12/17/13 Startup of Genset
Engine Manufactured/Reconstruction Date[4]		2013
Is this a Certified Stationary Spark Ignition Engine according to 40CFR60 Subpart JJJJ? (Yes or No)[5]		NO
Is this a Certified Stationary Spark Ignition Engine according to 40CFR60 Subpart JJJJ? (Yes or No)[6]		
Engine, Fuel and Combustion Data	Engine Type[7]	LB4S
	APCD Type[8]	A/F
	Fuel Type[9]	2FO
	H_2S (gr/100 scf)	
	Operating bhp/rpm	80@1800 RPM
	BSFC (Btu/bhp-hr)	4480 kr.
	Fuel throughput (ft^3/hr)	
	Fuel throughput ($MMft^3$/yr)	
	Operation (hrs/yr)	

Reference[10]	Potential Emissions[11]	lbs/hr	tons/yr
	NO_X		
	CO		
	VOC		
	SO_2		
	PM_{10}		
	Formaldehyde		

1. Enter the appropriate Source Identification Number for each emergency generator. Generator engines should be designated EG-1.

2. Enter the Source Status using the following codes:

NS	Construction of New Source (installation)	ES	Existing Source
MS	Modification of Existing Source	RS	Removal of Source

3. Enter the date (or anticipated date) of the engine's installation (construction of source), modification or removal.

4. Enter the date that the engine was manufactured, modified or reconstructed.

NO

5. Is the engine a certified stationary spark ignition internal combustion engine according to 40CFR60 Subpart IIII. If so, the engine and control device must be operated and maintained in accordance with the manufacturer's emission-related written instructions. You must keep records of conducted maintenance to demonstrate compliance, but no performance testing is required. If the certified engine is not operated and maintained in accordance with the manufacturer's emission-related written instructions, the engine will be considered a non-certified engine and you must demonstrate compliance according to 40CFR§60.4210 as appropriate.

   Provide a manufacturer's data sheet for all engines being registered.

NO

6. Is the engine a certified stationary spark ignition internal combustion engine according to 40CFR60 Subpart JJJJ. If so, the engine and control device must be operated and maintained in accordance with the manufacturer's emission-related written instructions. You must keep records of conducted maintenance to demonstrate compliance, but no performance testing is required. If the certified engine is not operated and maintained in accordance with the manufacturer's emission-related written instructions, the engine will be considered a non-certified engine and you must demonstrate compliance according to 40CFR§60.4243a(2)(i) through (iii), as appropriate.

   Provide a manufacturer's data sheet for all engines being registered.

7. Enter the Engine Type designation(s) using the following codes:

LB2S	Lean Burn Two Stroke	RB4S	Rich Burn Four Stroke
LB4S	Lean Burn Four Stroke		

8. Enter the Air Pollution Control Device (APCD) type designation(s) using the following codes:

A/F	Air/Fuel Ratio	IR	Ignition Retard
HEIS	High Energy Ignition System	SIPC	Screw-in Precombustion Chambers
PSC	Prestratified Charge	LEC	Low Emission Combustion
NSCR	Rich Burn & Non-Selective Catalytic Reduction	SCR	Lean Burn & Selective Catalytic Reduction

9. Enter the Fuel Type using the following codes:

PQ	Pipeline Quality Natural Gas	RG	Raw Natural Gas
2FO	#2 Fuel Oil	LPG	Liquid Propane Gas

10. Enter the Potential Emissions Data Reference designation using the following codes. Attach all referenced data to this *Compressor/Generator Data Sheet(s).*

MD	Manufacturer's Data	AP	AP-42	
GR	GRI-HAPCalc™	OT	Other _____	(please list)

11. Enter each engine's Potential to Emit (PTE) for the listed regulated pollutants in pounds per hour and tons per year. PTE shall be calculated at manufacturer's rated brake horsepower and may reflect reduction efficiencies of listed Air Pollution Control Devices. Emergency generator engines may use 500 hours of operation when calculating PTE. PTE data from this data sheet shall be incorporated in the *Emissions Summary Sheet.*

113 gal = 26 hr.

STORAGE TANK DATA SHEET

Source ID #[1]	Status[2]	Content[3]	Volume[4]	Dia[5]	Throughput[6]	Orientation[7]	Liquid Height[8]
T01	New	Diesel fuel	113	*	Not Known	HORZ	** Not Known

1. Enter the appropriate Source Identification Numbers (Source ID #) for each storage tank located at the compressor station. Tanks should be designated T01, T02, T03, etc.
2. Enter storage tank Status using the following:

   EXIST Existing Equipment — NEW Installation of New Equipment
   REM Equipment Removed
3. Enter storage tank content such as condensate, pipeline liquids, glycol (DEG or TEG), lube oil, etc.
4. Enter storage tank volume in gallons.
5. Enter storage tank diameter in feet.
6. Enter storage tank throughput in gallons per year.
7. Enter storage tank orientation using the following:

   VERT Vertical Tank — HORZ Horizontal Tank
8. Enter storage tank average liquid height in feet.

* Fuel tank: Length 7'7"
Width 3'5"

** Fuel tank height: 2' (14")

KOHLER.
Power Systems

Stationary Diesel Industrial Generators

EPA CERTIFIED			NON-EPA CERTIFIED		
[illegible]	[illegible]	[illegible]	[illegible]	[illegible]	[illegible]
10	Meets EPA Requirements	10REOZDC	10	-	-
15		15REOZDC	15	-	-
20		20REOZDC	20	-	-
		20REOZJC	20	-	-
30		30REOZJC	30	-	-
40	3	40REOZJC	40	-	-
50		50REOZJD	50	-	-
60		60REOZJD	60	-	-
80		80REOZJF	80	-	-
100		100REOZJF	100	-	-
125		125REOZJG	125	-	-
150		150REOZJF	150	-	-
180		180REOZJG	180	180REOZJG	-
200		200REOZJF	200	-	-
230		230REOZJE	230	-	-
250		250REOZJE	250	-	-
275		275REOZJE	275	-	-
300		300REOZJ	300	-	-
350		350REOZJ 350REOZJB	350	-	-
400		400REOZJ 400REOZJB	400	-	-
500		500REOZJ 500REOZJB 500REOZVC	500	500REOZVC	-
550		550REOZVB	550	-	-
600		600REOZVB	600	-	-
700		700REOZDE	700	700REOZDE	-
750		750REOZMD	750	750REOZMD	-
800		800REOZDE 800REOZMD	800	800REOZDE 800ROZMC	800ROZMC
900		900REOZDE 900REOZMD	900	900REOZDE 900REOZMD	-
1000		1000REOZDE 1000REOZMD	1000	1000REOZDE 1000ROZMC	1000ROZMC
1250		1250REOZDD 1250REOZMD	1250	1250ROZMC 1250REOZDD	1250ROZMC
1500		1500REOZDD	1500	1500REOZDD	-
1600		1600REOZMD	1600	1600ROZMC	1600ROZMC
1750		1750REOZDD 1750REOZMD	1750	1750REOZDD	-
[illegible]		[illegible]	1820	1820ROZMC	1820ROZMC
2000		2000REOZDD 2000REOZMD	2000	2000REOZDD 2000ROZMC	2000ROZMC
2250		2250REOZDD	2250	2250REOZDD	-
2500		2500REOZDB	2500	2500REOZDB	-
2800		2800REOZDB	2800	2800REOZDB	-
3000		-	-	-	-
3250		3250REOZD	2800	3250REOZD	-

Industrial Towables & Commercial Mobile

EPA CERTIFIED		
[illegible]	[illegible]	[illegible]
COMMERCIAL MOBILE		
10	Meets EPA Requirements	10EORDB
15		15EORDB
20		20EORDB
30		30EORDB
40		40EORDB
TOWABLE		
20	Meets EPA Requirements	20REOZT
40		40REOZT
60		60REOZT
100		100REOZT
150		150REOZT
200		200REOZT
500		500REOZT

Model: 50REOZJD

KOHLER. Power Systems

208-600 V | Diesel

ISO 9001 KOHLER POWER SYSTEMS NATIONALLY REGISTERED

Tier 3 EPA-Certified for Stationary Emergency Applications

Ratings Range

		60 Hz
Standby:	kW	44-51
	kVA	44-64
Prime:	kW	41-47
	kVA	41-59

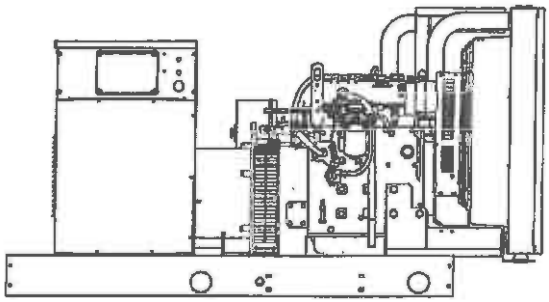

Generator Set Ratings

Alternator	Voltage	Ph	Hz	130°C Rise Standby Rating kW/kVA	Amps	105°C Rise Prime Rating kW/kVA	Amps
4P7BX	120/208	3	60	50/63	173	45/56	156
	127/220	3	60	50/63	164	45/56	148
	120/240	3	60	50/63	150	45/56	135
	120/240	1	60	44/44	183	41/41	171
	139/240	3	60	50/63	150	45/56	135
	220/380	3	60	49/61	93	44/55	83
	277/480	3	60	50/63	75	45/56	68
	347/600	3	60	50/63	60	45/56	54
4P8X	120/208	3	60	50/63	173	46/58	160
	127/220	3	60	50/63	164	46/58	151
	120/240	3	60	50/63	150	46/58	138
	120/240	1	60	46/46	192	43/43	179
	139/240	3	60	50/63	150	46/58	138
	220/380	3	60	50/63	95	46/58	87
	277/480	3	60	50/63	75	46/58	69
	347/600	3	60	50/63	60	46/58	55
4P10X	120/208	3	60	51/64	177	47/59	163
	127/220	3	60	51/64	167	47/59	154
	120/240	3	60	51/64	153	47/59	141
	120/240	1	60	49/49	204	45/45	188
	139/240	3	60	51/64	153	47/59	141
	220/380	3	60	51/64	97	47/59	89
	277/480	3	60	51/64	77	47/59	71
	347/600	3	60	51/64	61	47/59	57
4Q8X	120/240	1	60	50/50	208	45/45	188
4Q10X	120/240	1	60	50/50	208	46/46	192

RATINGS: All three-phase units are rated at 0.8 power factor. All single-phase units are rated at 1.0 power factor. *Standby Ratings:* The standby rating is applicable to varying loads for the duration of a power outage. There is no overload capability for this rating. *Prime Power Ratings:* At varying load, the number of generator set operating hours is unlimited. A 10% overload capacity is available for one hour in twelve. Ratings are in accordance with ISO-8528-1 and ISO-3046-1. For limited running time and continuous ratings, consult the factory. Obtain technical information bulletin (TIB-101) for ratings guidelines, complete ratings definitions, and site condition derates. The generator set manufacturer reserves the right to change the design or specifications without notice and without any obligation or liability whatsoever.

Standard Features

- Kohler Co. provides one-source responsibility for the generating system and accessories.
- The generator set and its components are prototype-tested, factory-built, and production-tested.
- The 60 Hz generator set offers a UL 2200 listing.
- The generator set accepts rated load in one step.
- The 60 Hz generator set meets NFPA 110, Level 1, when equipped with the necessary accessories and installed per NFPA standards.
- A one-year limited warranty covers all systems and components. Two- and five-year extended warranties are also available.
- Alternator features:
  - The unique Fast-Response™ X excitation system delivers excellent voltage response and short-circuit capability using a rare-earth, permanent magnet (PM)-excited alternator.
  - The brushless, rotating-field alternator has broadrange reconnectability.
- Other features:
  - Kohler designed controllers for guaranteed system integration and remote communication. See Controllers on page 3.
  - The low coolant level shutdown prevents overheating (standard on radiator models only).
  - Integral vibration isolation eliminates the need for under-unit vibration spring isolators.

Alternator Specifications

Specifications	Alternator
Manufacturer	Kohler
Type	4-Pole, Rotating-Field
Exciter type	Brushless, Rare-Earth Permanent-Magnet
Leads: quantity, type	
4P_X	12, Reconnectable
4Q_X	4, 110-120/220-240
Voltage regulator	Solid State, Volts/Hz
Insulation:	NEMA MG1
Material	Class H
Temperature rise	130°C, Standby
Bearing: quantity, type	1, Sealed
Coupling	Flexible Disc
Amortisseur windings	Full
Voltage regulation, no-load to full-load	Controller Dependent
One-step load acceptance	100% of Rating
Unbalanced load capability	100% of Rated Standby Current
Peak motor starting kVA:	(35% dip for voltages below)
480 V 4P7BX (12 lead)	180
480 V 4P8X (12 lead)	261
480 V 4P10X (12 lead)	275
240 V 4Q8X (4 lead)	121
240 V 4Q10X (4 lead)	144

- NEMA MG1, IEEE, and ANSI standards compliance for temperature rise and motor starting.
- Sustained short-circuit current of up to 300% of the rated current for up to 10 seconds.
- Sustained short-circuit current enabling downstream circuit breakers to trip without collapsing the alternator field.
- Self-ventilated and dripproof construction.
- Vacuum-impregnated windings with fungus-resistant epoxy varnish for dependability and long life.
- Superior voltage waveform from a two-thirds pitch stator and skewed rotor.

Application Data

Engine

Engine Specifications	
Manufacturer	John Deere
Engine model	4024HF285B
Engine type	4-Cycle, Turbocharged
Cylinder arrangement	4 Inline
Displacement, L (cu. in.)	2.4 (149)
Bore and stroke, mm (in.)	86 x 105 (3.39 x 4.13)
Compression ratio	18.2:1
Piston speed, m/min. (ft./min.)	375 (1230)
Main bearings: quantity, type	5, Replaceable Insert
Rated rpm	1800
Max. power at rated rpm, kWm (BHP)	60 (80)
Cylinder head material	Cast Iron
Crankshaft material	Ductile Iron
Valve material:	
Intake	Chromium-Silicon Steel
Exhaust	Stainless Steel
Governor: type, make/model	JDEC Electronic, Level 18, EUP
Frequency regulation, no-load to full-load	Isochronous
Frequency regulation, steady state	±0.25%
Frequency	Fixed
Air cleaner type, all models	Dry

Exhaust

Exhaust System	
Exhaust manifold type	Dry
Exhaust flow at rated kW, m^3/min. (cfm)	12.0 (423)
Exhaust temperature at rated kW, dry exhaust, °C (°F)	574 (1066)
Maximum allowable back pressure, kPa (in. Hg)	7.5 (2.2)
Exhaust outlet size at engine hookup, mm (in.)	63.5 (2.5)

Engine Electrical

Engine Electrical System	
Battery charging alternator:	
Ground (negative/positive)	Negative
Volts (DC)	12
Ampere rating	70
Starter motor rated voltage (DC)	12
Battery, recommended cold cranking amps (CCA):	
Quantity, CCA rating	One, 640
Battery voltage (DC)	12

Fuel

Fuel System	
Fuel supply line, min. ID, mm (in.)	11.0 (0.44)
Fuel return line, min. ID, mm (in.)	6.0 (0.25)
Max. lift, engine-driven fuel pump, m (ft.)	3.0 (10.0)
Max. fuel flow, Lph (gph)	82 (21.7)
Max. return line restriction, kPa (in. Hg)	35 (10.3)
Fuel prime pump	Manual
Fuel filter	
Secondary	5 Microns @ 98% Efficiency
Water Separator	Yes
Recommended fuel	#2 Diesel

Lubrication

Lubricating System	
Type	Full Pressure
Oil pan capacity, L (qt.)	7.3 (7.7)
Oil pan capacity with filter, L (qt.)	8.2 (8.7)
Oil filter: quantity, type	1, Cartridge
Oil cooler	Water-Cooled

Application Data

Cooling

Radiator System	
Ambient temperature, °C (°F)*	50 (122)
Engine jacket water capacity, L (gal.)	2.6 (0.7)
Radiator system capacity, including engine, L (gal.)	10.6 (2.8)
Engine jacket water flow, Lpm (gpm)	98 (26)
Heat rejected to cooling water at rated kW, dry exhaust, kW (Btu/min.)	35.7 (2030)
Heat rejected to air charge cooler at rated kW, dry exhaust, kW (Btu/min.)	10.9 (621)
Water pump type.	Centrifugal
Fan diameter, including blades, mm (in.)	597 (23.5)
Fan, kWm (HP)	1.2 (1.6)
Max. restriction of cooling air, intake and discharge side of radiator, kPa (in. H_2O)	0.125 (0.5)

* Enclosure reduces ambient temperature capability by 5°C (9°F).

Operation Requirements

Air Requirements	
Radiator-cooled cooling air, m^3/min. (scfm)‡	96 (3400)
Combustion air, m^3/min. (cfm)	4.3 (152)
Heat rejected to ambient air:	
Engine, kW (Btu/min.)	14.0 (747)
Alternator, kW (Btu/min.)	7.6 (435)

‡ Air density = 1.20 kg/m^3 (0.075 lbm/ft^3)

Fuel Consumption		
Diesel, Lph (gph) at % load	Standby Rating	
100%	16.2	(4.3)
75%	12.1	(3.2)
50%	8.5	(2.2)
25%	5.0	(1.3)
Diesel, Lph (gph) at % load	Prime Rating	
100%	13.7	(3.6)
75%	10.8	(2.9)
50%	7.6	(2.0)
25%	4.5	(1.2)

Controllers

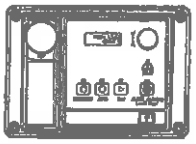

Decision-Maker® 3000 Controller
Provides advanced control, system monitoring, and system diagnostics for optimum performance and compatibility.

- Digital display and menu control provide easy local data access
- Measurements are selectable in metric or English units
- Remote communication thru a PC via network or serial configuration
- Controller supports Modbus® protocol
- Integrated hybrid voltage regulator with ±0.5% regulation
- Built-in alternator thermal overload protection
- NFPA 110 Level 1 capability

Refer to G6-100 for additional controller features and accessories.

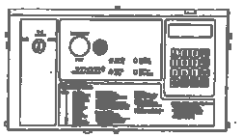

Decision-Maker® 550 Controller
Provides advanced control, system monitoring, and system diagnostics with remote monitoring capabilities.

- Digital display and keypad provide easy local data access
- Measurements are selectable in metric or English units
- Remote communication thru a PC via network or modem configuration
- Controller supports Modbus® protocol
- Integrated voltage regulator with ±0.25% regulation
- Built-in alternator thermal overload protection
- NFPA 110 Level 1 capability

Refer to G6-46 for additional controller features and accessories.

KOHLER CO., Kohler, Wisconsin 53044 USA
Phone 920-457-4441, Fax 920-459-1646
For the nearest sales and service outlet in the US and Canada, phone 1-800-544-2444
KOHLERPower.com

Kohler Power Systems
Asia Pacific Headquarters
7 Jurong Pier Road
Singapore 619159
Phone (65) 6264-6422, Fax (65) 6264-6455

Standard Features

- Alternator Protection
- Battery Rack and Cables
- Oil Drain and Coolant Drain w/Hose Barb
- Oil Drain Extension (with narrow skid and enclosure models only)
- Operation and Installation Literature
- Radiator Drain Extension (with enclosure only)

Available Options

Approvals and Listings

- ☐ CSA Approval
- ☐ IBC Seismic Certification
- ☐ UL2200 Listing

Enclosed Unit

- ☐ Sound Enclosure (with enclosed critical silencer)
- ☐ Weather Enclosure (with enclosed critical silencer)

Open Unit

- ☐ Exhaust Silencer, Critical (kit: PA-324470)
- ☐ Flexible Exhaust Connector, Stainless Steel

Fuel System

- ☐ Flexible Fuel Lines
- ☐ Fuel Pressure Gauge
- ☐ Subbase Fuel Tanks

Controller

- ☐ Common Failure Relay
- ☐ Communication Products and PC Software (550 controller only)
- ☐ Customer Connection (550 controller only)
- ☐ Dry Contact (isolated alarm) (550 controller only)
- ☐ Input/Output Module (3000 controller only)
- ☐ Remote Annunciator Panel
- ☐ Remote Emergency Stop
- ☐ Run Relay

Cooling System

- ☐ Block Heater, 1500 W, 110-120 V
  Recommended for ambient temperatures below 0°C (32°F)
- ☐ Radiator Duct Flange

Electrical System

- ☐ Alternator Strip Heater
- ☐ Battery
- ☐ Battery Charger, Equalize/Float Type
- ☐ Battery Heater
- ☐ Line Circuit Breaker (NEMA type 1 enclosure)
- ☐ Line Circuit Breaker with Shunt Trip (NEMA type 1 enclosure)

Paralleling System

- ☐ Reactive Droop Compensator
- ☐ Remote Speed Adjust Control/Electronic Governor
- ☐ Voltage Adjust Control
- ☐ Voltage Regulator Relocation (550 controller only)

Miscellaneous

- ☐ Air Cleaner, Heavy Duty
- ☐ Air Cleaner Restriction Indicator
- ☐ Closed Crankcase Vent
- ☐ Engine Fluids (oil and coolant) Added
- ☐ Rated Power Factor Testing
- ☐ Rodent Guards

Literature

- ☐ General Maintenance
- ☐ NFPA 110
- ☐ Overhaul
- ☐ Production

Warranty

- ☐ 2-Year Basic
- ☐ 5-Year Basic
- ☐ 5-Year Comprehensive

Other Options

- ☐ _____
- ☐ _____
- ☐ _____
- ☐ _____
- ☐ _____

Dimensions and Weights

Overall Size, L x W x H, mm (in.):
Wide Skid: 2300 x 1041 x 1133 (90.55 x 40.98 x 44.61)
Narrow Skid: 1998 x 780 x 1067 (78.66 x 30.71 x 42.01)
Weight (radiator model), wet, kg (lb.): 721 (1586)

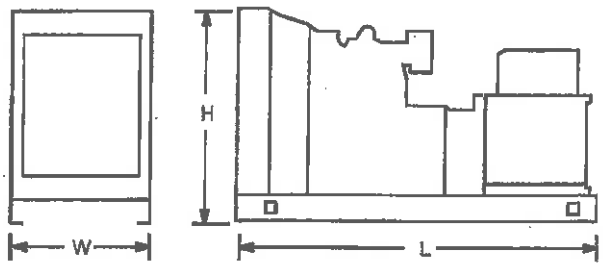

NOTE: This drawing is provided for reference only and should not be used for planning installation. Contact your local distributor for more detailed information.

DISTRIBUTED BY:

© 2011, 2012, 2013 by Kohler Co. All rights reserved.

G5-359 (50REOZJD) 7/13d

KOHLER Power Systems

50REOZJD

60 HZ. DIESEL INDUSTRIAL GENERATOR SET EMISSION DATA SHEET

ENGINE INFORMATION

Model:	John Deere, 4024HF285B	Bore:	86mm (3.39 in.)
Nameplate BHP @ 1800 RPM:	80	Stroke:	105mm (4.13 in.)
Type:	4-Cycle, 4 Cylinder, Inline	Displacement:	2.4 L (149 cu. in.)
Aspiration:	Turbocharged		
Compression Ratio	18.2:1	EPA Family:	DJDXL04.5141
		EPA Certificate:	DJDXL04.5141-003

Table 1

PERFORMANCE DATA:	1/4 Standby	1/2 Standby	3/4 Standby	Full Standby
Engine bkW @ Stated Load	15.00	30.00	45.00	60.00
Fuel Consumption (g/kWh)	234.50	229.30	226.80	221.50
Exhaust Gas Flow (m^3/min)				10.00
Exhaust Temperature (°C)				538.00

Table 2

EXHAUST EMISSION DATA:	EPA CERTIFICATE DATA
HC (Total Unburned Hydrocarbons)	0.2
NOx (Oxides of Nitrogen as NO2)	4.2 gram
CO (Carbon Monoxide)	0.6 grams
PM (Particular Matter)	0.22

Values are in g/kWh unless otherwise noted

TEST METHODS AND CONDITIONS

The EPA Certificate Data in Table 2 is a weighted average value per ISO 8528 D2.

Data and specifications subject to change without notice

For further information, please contact Todd Loes at John Deere Power Systems, 319-292-6050

50RE02JD

	UNITED STATES ENVIRONMENTAL PROTECTION AGENCY **2013 MODEL YEAR** **CERTIFICATE OF CONFORMITY** **WITH THE CLEAN AIR ACT OF 1990**	**OFFICE OF TRANSPORTATION AND AIR QUALITY** **ANN ARBOR, MICHIGAN 48105**

Certificate Issued To: Deere & Company (U.S. Manufacturer or Importer) **Certificate Number:** DJDXL04.5141-003	**Effective Date:** 10/05/2012 **Expiration Date:** 12/31/2013	Byron J. Bunker, Acting Division Director Compliance Division	**Issue Date:** 10/05/2012 **Revision Date:** N/A

Model Year: 2013 **Manufacturer Type:** Original Engine Manufacturer **Engine Family:** DJDXL04.5141	**Mobile/Stationary Indicator:** Stationary **Emissions Power Category:** 56<=kW<75 **Fuel Type:** Diesel **After Treatment Devices:** No After Treatment Devices Installed **Non-after Treatment Devices:** Engine Design Modification, Non-standard Non-After Treatment Device Installed, Smoke Puff Limiter

Pursuant to Section 111 and Section 213 of the Clean Air Act (42 U.S.C. sections 7411 and 7547) and 40 CFR Part 60, and subject to the terms and conditions prescribed in those provisions, this certificate of conformity is hereby issued with respect to the test engines which have been found to conform to applicable requirements and which represent the following engines, by engine family, more fully described in the documentation required by 40 CFR Part 60 and produced in the stated model year.

This certificate of conformity covers only those new compression-ignition engines which conform in all material respects to the design specifications that applied to those engines described in the documentation required by 40 CFR Part 60 and which are produced during the model year stated on this certificate of the said manufacturer, as defined in 40 CFR Part 60.

It is a term of this certificate that the manufacturer shall consent to all inspections described in 40 CFR 1068 and authorized in a warrant or court order. Failure to comply with the requirements of such a warrant or court order may lead to revocation or suspension of this certificate for reasons specified in 40 CFR Part 60. It is also a term of this certificate that this certificate may be revoked or suspended or rendered void *ab initio* for other reasons specified in 40 CFR Part 60.

This certificate does not cover engines sold, offered for sale, or introduced, or delivered for introduction, into commerce in the U.S. prior to the effective date of the certificate.

SOUTH COAST AIR QUALITY MANAGEMENT DISTRICT
21865 Copley Drive, Diamond Bar, CA 91765

AQMD

Application No.
various
Page 1

50REDZJD

CERTIFIED EQUIPMENT PERMIT (CEP)
NOT A PERMIT TO CONSTRUCT OR OPERATE

Expires on December 31, 2011
ID 148329

Legal Owner or Operator:

JOHN DEERE POWER SYSTEMS
P. O. BOX 8000
WATERLOO, IOWA 50704-8000
ATTN: RICHARD BISHOP

Equipment Location: SAME AS ABOVE

The equipment described below and as shown on the approved plans and specifications are subject to the special condition or conditions listed.

Equipment Description

APPLICATION NO. 493796
INTERNAL COMBUSTION ENGINE, JOHN DEERE, 4 CYLINDER, TURBOCHARGED, AFTERCOOLED, MODEL 4045TF285E, 99 BHP, DIESEL-FUELED, DRIVING AN EMERGENCY ELECTRICAL GENERATOR.

APPLICATION NO. 494710
INTERNAL COMBUSTION ENGINE, JOHN DEERE, 4 CYLINDER, TURBOCHARGED, AFTERCOOLED, MODEL 4024HF285B, 80 BHP, DIESEL-FUELED, DRIVING AN EMERGENCY ELECTRICAL GENERATOR.

APPLICATION NO. 494713
INTERNAL COMBUSTION ENGINE, JOHN DEERE, 5 CYLINDER, TURBOCHARGED, AFTERCOOLED, MODEL 5030HF285G, 96 BHP, DIESEL-FUELED, DRIVING AN EMERGENCY ELECTRICAL GENERATOR.

Manufacturer Condition

1. **THIS CERTIFIED EQUIPMENT PERMIT (CEP) IS NOT A PERMIT TO CONSTRUCT OR OPERATE.** THE PERSON CONSTRUCTING, INSTALLING OR OPERATING THE EQUIPMENT AT EACH SPECIFIC SITE SHALL OBTAIN ALL NECESSARY PERMIT(S) TO CONSTRUCT AND PERMIT(S) TO OPERATE AND COMPLY WITH ANY OTHER DISTRICT RULES AND REGULATIONS INCLUDING THE REQUIREMENTS OF REGULATION XIII.

End User Conditions

1. OPERATION OF THIS EQUIPMENT SHALL BE CONDUCTED IN ACCORDANCE WITH ALL DATA AND SPECIFICATIONS SUBMITTED WITH THE APPLICATION UNDER WHICH THIS PERMIT IS ISSUED UNLESS OTHERWISE NOTED BELOW.

2. THIS EQUIPMENT SHALL BE PROPERLY MAINTAINED AND KEPT IN GOOD OPERATING CONDITIONS AT ALL TIMES.

ORIGINAL

CERTIFIED EQUIPMENT PERMIT (CEP)
NOT A PERMIT TO CONSTRUCT OR OPERATE

3. A NON-RESETTABLE TOTALIZING TIMER SHALL BE INSTALLED AND MAINTAINED TO INDICATE THE ENGINE ELAPSED OPERATING TIME.

4. THIS ENGINE SHALL NOT OPERATE MORE THAN 200 HOURS IN ANY ONE YEAR, WHICH INCLUDES NO MORE THAN 50 HOURS IN ANY ONE YEAR FOR MAINTENANCE AND TESTING PURPOSES AND NO MORE THAN 4.2 HOURS IN ANY ONE MONTH FOR MAINTENANCE AND TESTING PURPOSES.

5. AN ENGINE OPERATING LOG OF ENGINE OPERATIONS SHALL BE KEPT AND MAINTAINED DOCUMENTING THE TOTAL TIME THE ENGINE IS OPERATED EACH MONTH AND THE SPECIFIC REASON FOR OPERATION AS:
   A. EMERGENCY USE
   B. MAINTENANCE AND TESTING
   C. OTHER (BE SPECIFIC)

   IN ADDITION, FOR EACH TIME THE ENGINE IS MANUALLY STARTED, THE LOG SHALL INCLUDE THE DATE OF ENGINE OPERATION, THE SPECIFIC REASON FOR OPERATION, AND THE TOTALIZING HOUR METER READING (IN HOURS AND TENTHS OF HOURS) AT THE BEGINNING AND THE END OF THE OPERATION.

6. ON OR BEFORE JANUARY 15TH OF EACH YEAR, THE OPERATOR SHALL RECORD IN THE ENGINE OPERATING LOG:
   A. THE TOTAL HOURS OF ENGINE OPERATION FOR THE PREVIOUS CALENDAR YEAR, AND
   B. THE TOTAL HOURS OF ENGINE OPERATION FOR MAINTENANCE AND TESTING FOR THE PREVIOUS CALENDAR YEAR.

7. ENGINE OPERATION LOG(S) SHALL BE RETAINED ON SITE FOR A MINIMUM OF THREE CALENDAR YEARS AND SHALL BE MADE AVAILABLE TO THE EXECUTIVE OFFICER OR REPRESENTATIVE UPON REQUEST.

8. THE OPERATOR SHALL NOT PURCHASE ANY DIESEL FUEL UNLESS THE FUEL IS LOW SULFUR DIESEL FOR WHICH THE SULFUR CONTENT DOES NOT EXCEED 15 PPM BY WEIGHT. EFFECTIVE JANUARY 1, 2006, THE OPERATOR SHALL ONLY USE DIESEL FUEL WITH A SULFUR CONTENT THAT DOES NOT EXCEED 15 PPM BY WEIGHT, UNLESS THE OPERATOR DEMONSTRATES IN WRITING TO THE EXECUTIVE OFFICER THAT SPECIFIC ADDITIONAL TIME IS NECESSARY.

9. OPERATION BEYOND THE 50 HOURS PER YEAR ALLOTTED FOR ENGINE MAINTENANCE AND TESTING SHALL BE ALLOWED ONLY IN THE EVENT OF A LOSS OF GRID POWER OR UP TO 30 MINUTES PRIOR TO A ROTATING OUTAGE, PROVIDED THAT: (A) THE UTILITY DISTRIBUTION COMPANY HAS ORDERED ROTATING OUTAGES IN THE CONTROL AREA WHERE THE ENGINE IS LOCATED OR HAS INDICATED THAT IT EXPECTS TO ISSUE SUCH AN ORDER AT A CERTAIN TIME; AND (B) THE ENGINE IS LOCATED IN A UTILITY SERVICE BLOCK THAT IS SUBJECT TO THE ROTATING OUTAGE. ENGINE OPERATION SHALL BE TERMINATED IMMEDIATELY AFTER THE UTILITY DISTRIBUTION COMPANY ADVISES THAT A ROTATING OUTAGE IS NO LONGER IMMINENT OR IN EFFECT.

10. THIS ENGINE SHALL NOT BE USED AS PART OF AN INTERRUPTIBLE SERVICE CONTRACT IN WHICH A FACILITY RECEIVES A PAYMENT OR REDUCED RATES IN RETURN FOR

CERTIFIED EQUIPMENT PERMIT (CEP)
(NOT A PERMIT TO CONSTRUCT OR OPERATE)

REDUCING ELECTRICAL LOAD ON THE GRID WHEN REQUESTED TO DO SO BY THE UTILITY OR THE GRID OPERATOR.

11. THIS ENGINE SHALL BE A US EPA TIER 3 CERTIFIED, NON-ROAD COMPRESSION-IGNITION ENGINE, AS EVIDENCED BY THE MANUFACTURER'S ENGINE TAG.

Please notify Raman Patel at 909/396-2466 when SCAQMD information packets are needed or if you have any questions concerning the Certification/Registration Program.

This Certified Equipment Permit is based on the plans, specifications, and data submitted as it pertains to the release of air contaminants and control measures to reduce air contaminants. No approval or opinion concerning safety and other factors in design, construction or operation of the equipment is expressed or implied.

This Certified Equipment Permit will become invalid if this application is canceled. **THIS PERMIT SHALL EXPIRE ON December 31, 2011** unless an extension is granted by the Executive Officer.

By Raman C. Patel
RAMAN C. PATEL, P.E.
Senior Air Quality Engineer

ORIGINAL

ATTACHMENT L

GENERAL PERMIT REGISTRATION APPLICATION FEE

ATTACHMENT O

EMISSIONS SUMMARY SHEETS

EMERGENCY GENERATOR EMISSION SUMMARY SHEET FOR CRITERIA POLLUTANTS

Emergency Generator Location: Greater Marion-Carolina

Registration Number (Agency Use) G65-C

	Potential Emissions (lbs/hr)					Potential Emissions (tons/yr)				
Source ID No.	NO_X	CO	VOC	SO_2	PM_{10}	NO_X	CO	VOC	SO_2	PM_{10}
T01										
Total										

Applies to gasoline

EMERGENCY GENERATOR EMISSION SUMMARY SHEET FOR HAZARDOUS/TOXIC POLLUTANTS

Emergency Generator Location:

Registration Number (Agency Use) G65-C

	Potential Emissions (lbs/hr)						Potential Emissions (tons/yr)					
Source ID No.	Benzene	Ethyl-benzene	Toluene	Xylenes	n-Hexane	Formalde-hyde	Benzene	Ethyl-benzene	Toluene	Xylenes	n-Hexane	Formalde-hyde
EG-1	N/A	N/A	N/A	N/A	N/A	N/A						
Total												