CONSOL ENERGY

CONSOL Energy Inc.
CNX Center
1000 Consol Energy Drive
Canonsburg, PA 15321-6506

October 3, 2014

RECEIVED
OCT 06 2014
WV DEP / DIV OF AIR QUALITY

Mr. Jerry Williams, PE
Air Pollution Permit Engineer
West Virginia Department of Environmental Protection
Bureau of Air Quality
601 57th Street
Charleston, WV 25304

Re: CONE Midstream Partners, LP Application for Rule 13 Permit
Oxford Station R13-3208
Shirley Station R13-3207

Mr. Williams:

In response to your letters dated September 16, 2014 Cone Gathering LLC, now CONE Midstream Partners, LP (CONE) submits the modified applications for both Shirley and Oxford Stations. Included within these applications are the previously requested Attachments L, M, N, and attachments M, N and for Shirley Station. You will receive a separate letter from our counsel regarding the source aggregation.

The differences in these applications from the previous submittals are as follows:

- Effective September 26 2014, CONE became CONE Midstream Partners LP trading under the symbol CNNX, the NAICS code for the stations has been changed to 486210 to reflect CONE's filing with the SEC of SIC code 4922, natural gas transmission.
- The expected liquid throughput at Oxford station has been updated to reflect the latest data CONE has received from the gas supplier. The production volumes and emission tables have been updated to reflect this increase.
- Shirley station has added two gas fired compressors to act as vapor recovery units for the proposed tank system at the station.
- Both stations will submit new class I legal advertisements to reflect these changes

If you have any questions regarding these matters, please feel free to contac me at 724-485-3063 or at DavidMorris@consolenergy.com

Sincerely,

David Morris, EIT
Air Quality Manager
CONSOL Energy

ID # 017-00102
Reg CONE GATHERING R13-3208
Company ~~[illegible]~~ CONE GATHERING
Facility OXFORD Initials IV

NON-CONFIDENTIAL

CC: Joseph Fink, Chief Operating Office, CONE Midstream Partners LP
Frank Calderon, General Manager, Environmental Compliance & Regulatory Affairs, CONSOL Energy Inc.

Oxford R13 Table of Contents

ID # 017-0010
Reg R13-3208
Company CONE GATHERING
Facility OXFORD Initials W

NON-CONFIDENTIAL

WEST VIRGINIA DEPARTMENT OF ENVIRONMENTAL PROTECTION

DIVISION OF AIR QUALITY

601 57th Street, SE
Charleston, WV 25304
(304) 926-0475
www.dep.wv.gov/daq

APPLICATION FOR NSR PERMIT AND TITLE V PERMIT REVISION (OPTIONAL)

PLEASE CHECK ALL THAT APPLY TO **NSR (45CSR13)** (IF KNOWN):

☒ **CONSTRUCTION** ☐ **MODIFICATION** ☐ **RELOCATION**
☐ **CLASS I ADMINISTRATIVE UPDATE** ☐ **TEMPORARY**
☐ **CLASS II ADMINISTRATIVE UPDATE** ☐ **AFTER-THE-FACT**

PLEASE CHECK TYPE OF **45CSR30 (TITLE V)** REVISION (IF ANY):

☐ **ADMINISTRATIVE AMENDMENT** ☐ **MINOR MODIFICATION**
☐ **SIGNIFICANT MODIFICATION**

IF ANY BOX ABOVE IS CHECKED, INCLUDE TITLE V REVISION INFORMATION AS **ATTACHMENT S** TO THIS APPLICATION

FOR TITLE V FACILITIES ONLY: Please refer to "Title V Revision Guidance" in order to determine your Title V Revision options (Appendix A, "Title V Permit Revision Flowchart") and ability to operate with the changes requested in this Permit Application.

Section I. General

1. Name of applicant *(as registered with the WV Secretary of State's Office):*
CONE Midstream Partners LP

2. Federal Employer ID No. ***(FEIN):***
45-3344658

3. Name of facility *(if different from above):*
Oxford Station

4. The applicant is the:
☐ **OWNER** ☐ **OPERATOR** ☒ **BOTH**

5A. Applicant's mailing address:
1000 CONSOL Energy Drive
Canonsburg, PA 15317

5B. Facility's present physical address:
2123 Elliot Road
West Union, WV 26456

6. **West Virginia Business Registration.** Is the applicant a resident of the State of West Virginia? ☐ **YES** ☒ **NO**
- If **YES,** provide a copy of the **Certificate of Incorporation/Organization/Limited Partnership** (one page) including any name change amendments or other Business Registration Certificate as **Attachment A.**
- If **NO,** provide a copy of the **Certificate of Authority/Authority of L.L.C./Registration** (one page) including any name change amendments or other Business Certificate as **Attachment A.**

7. If applicant is a subsidiary corporation, please provide the name of parent corporation: CONSOL Energy

8. Does the applicant own, lease, have an option to buy or otherwise have control of the *proposed site?* ☒ **YES** ☐ **NO**
If **YES,** please explain: CONE Gathering Purchased the property in 2014.

- If **NO,** you are not eligible for a permit for this source.

9. Type of plant or facility (stationary source) to be **constructed, modified, relocated, administratively updated** or **temporarily permitted** (e.g., coal preparation plant, primary crusher, etc.): Natural Gas Dehydration facility

10. North American Industry Classification System **(NAICS)** code for the facility:
486210

11A. DAQ Plant ID No. (for existing facilities only):
–

11B. List all current 45CSR13 and 45CSR30 (Title V) permit numbers associated with this process (for existing facilities only):

All of the required forms and additional information can be found under the Permitting Section of DAQ's website, or requested by phone.

12A.

- For **Modifications, Administrative Updates** or **Temporary permits** at an existing facility, please provide directions to the *present location* of the facility from the nearest state road;
- For **Construction** or **Relocation permits,** please provide directions to the *proposed new site location* from the nearest state road. Include a **MAP** as **Attachment B.**

Take rt 50 west (~25miles) and make a left at the sunnyside exit. Continue on sunnyside for a mile and make a left on oxford road. Continue out oxford rd for ~3 miles and make a left onto Elliot road. The dehy is 2 miles on Elliot

12.B. New site address (if applicable):	12C. Nearest city or town: West Union	12D. County: Doddridge
12.E. UTM Northing (KM): 4343.7048 km N	12F. UTM Easting (KM):515.4689 km E	12G. UTM Zone: REV1 NAD83 zone 17N

13. Briefly describe the proposed change(s) at the facility:
Installation of Dehydrator and associated equipment

14A. Provide the date of anticipated installation or change: – If this is an **After-The-Fact** permit application, provide the date upon which the proposed change did happen: / /	14B. Date of anticipated Start-Up if a permit is granted: As soon as Permitted

14C. Provide a **Schedule** of the planned **Installation** of/**Change** to and **Start-Up** of each of the units proposed in this permit application as **Attachment C** (if more than one unit is involved).

15. Provide maximum projected **Operating Schedule** of activity/activities outlined in this application:
Hours Per Day 24 Days Per Week 7 Weeks Per Year 52

16. Is demolition or physical renovation at an existing facility involved? ☐ **YES** ☒ **NO**

17. **Risk Management Plans.** If this facility is subject to 112(r) of the 1990 CAAA, or will become subject due to proposed changes (for applicability help see www.epa.gov/ceppo), submit your **Risk Management Plan (RMP)** to U. S. EPA Region III.

18. **Regulatory Discussion.** List all Federal and State air pollution control regulations that you believe are applicable to the proposed process *(if known).* A list of possible applicable requirements is also included in Attachment S of this application (Title V Permit Revision Information). Discuss applicability and proposed demonstration(s) of compliance *(if known).* Provide this information as **Attachment D.**

Section II. Additional attachments and supporting documents.

19. Include a check payable to WVDEP – Division of Air Quality with the appropriate **application fee** (per 45CSR22 and 45CSR13).

20. Include a **Table of Contents** as the first page of your application package.

21. Provide a **Plot Plan,** e.g. scaled map(s) and/or sketch(es) showing the location of the property on which the stationary source(s) is or is to be located as **Attachment E** (Refer to ***Plot Plan Guidance***) .
– Indicate the location of the nearest occupied structure (e.g. church, school, business, residence).

22. Provide a **Detailed Process Flow Diagram(s)** showing each proposed or modified emissions unit, emission point and control device as **Attachment F.**

23. Provide a **Process Description** as **Attachment G.**
– Also describe and quantify to the extent possible all changes made to the facility since the last permit review (if applicable).

All of the required forms and additional information can be found under the Permitting Section of DAQ's website, or requested by phone.

24. Provide **Material Safety Data Sheets (MSDS)** for all materials processed, used or produced as **Attachment H.**

– For chemical processes, provide a MSDS for each compound emitted to the air.

25. Fill out the **Emission Units Table** and provide it as **Attachment I.**

26. Fill out the **Emission Points Data Summary Sheet (Table 1 and Table 2)** and provide it as **Attachment J.**

27. Fill out the **Fugitive Emissions Data Summary Sheet** and provide it as **Attachment K.**

28. Check all applicable **Emissions Unit Data Sheets** listed below:

☐ Bulk Liquid Transfer Operations
☐ Chemical Processes
☐ Concrete Batch Plant
☐ Grey Iron and Steel Foundry
☒ General Emission Units: Gas dehydrator
☐ Haul Road Emissions
☐ Hot Mix Asphalt Plant
☐ Incinerator
☐ Indirect Heat Exchanger
☐ Quarry
☐ Solid Materials Sizing, Handling and Storage Facilities
☒ Storage Tanks

Fill out and provide the **Emissions Unit Data Sheet(s)** as **Attachment L.**

29. Check all applicable **Air Pollution Control Device Sheets** listed below:

☐ Absorption Systems
☐ Adsorption Systems
☐ Afterburner
☐ Baghouse
☐ Condenser
☐ Electrostatic Precipitator
☐ Flare
☐ Mechanical Collector
☐ Wet Collecting System
☐ Other Collectors, specify

Fill out and provide the **Air Pollution Control Device Sheet(s)** as **Attachment M.**

30. Provide all **Supporting Emissions Calculations** as **Attachment N,** or attach the calculations directly to the forms listed in Items 28 through 31.

31. **Monitoring, Recordkeeping, Reporting and Testing Plans.** Attach proposed monitoring, recordkeeping, reporting and testing plans in order to demonstrate compliance with the proposed emissions limits and operating parameters in this permit application. Provide this information as **Attachment O.**

➢ Please be aware that all permits must be practically enforceable whether or not the applicant chooses to propose such measures. Additionally, the DAQ may not be able to accept all measures proposed by the applicant. If none of these plans are proposed by the applicant, DAQ will develop such plans and include them in the permit.

32. **Public Notice.** At the time that the application is submitted, place a **Class I Legal Advertisement** in a newspaper of general circulation in the area where the source is or will be located (See 45CSR§13-8.3 through 45CSR§13-8.5 and ***Example Legal Advertisement*** for details). Please submit the **Affidavit of Publication** as **Attachment P** immediately upon receipt.

33. **Business Confidentiality Claims.** Does this application include confidential information (per 45CSR31)?

☐ **YES** ☒ **NO**

➢ If **YES,** identify each segment of information on each page that is submitted as confidential and provide justification for each segment claimed confidential, including the criteria under 45CSR§31-4.1, and in accordance with the DAQ's ***"Precautionary Notice – Claims of Confidentiality"*** guidance found in the ***General Instructions*** as **Attachment Q.**

Section III. Certification of Information

34. **Authority/Delegation of Authority.** Only required when someone other than the responsible official signs the application. Check applicable **Authority Form** below:

☐ Authority of Corporation or Other Business Entity
☐ Authority of Governmental Agency
☐ Authority of Partnership
☐ Authority of Limited Partnership

Submit completed and signed **Authority Form** as **Attachment R.**

All of the required forms and additional information can be found under the Permitting Section of DAQ's website, or requested by phone.

35A. **Certification of Information.** To certify this permit application, a Responsible Official (per 45CSR§13-2.22 and 45CSR§30-2.28) or Authorized Representative shall check the appropriate box and sign below.

Certification of Truth, Accuracy, and Completeness

I, the undersigned ☒ **Responsible Official** / ☐ **Authorized Representative,** hereby certify that all information contained in this application and any supporting documents appended hereto, is true, accurate, and complete based on information and belief after reasonable inquiry I further agree to assume responsibility for the construction, modification and/or relocation and operation of the stationary source described herein in accordance with this application and any amendments thereto, as well as the Department of Environmental Protection, Division of Air Quality permit issued in accordance with this application, along with all applicable rules and regulations of the West Virginia Division of Air Quality and W.Va. Code § 22-5-1 et seq. (State Air Pollution Control Act). If the business or agency changes its Responsible Official or Authorized Representative, the Director of the Division of Air Quality will be notified in writing within 30 days of the official change.

Compliance Certification

Except for requirements identified in the Title V Application for which compliance is not achieved, I, the undersigned hereby certify that, based on information and belief formed after reasonable inquiry, all air contaminant sources identified in this application are in compliance with all applicable requirements.

SIGNATURE Kris Hagedom DATE: 10-3-2014

(Please use blue ink) *(Please use blue ink)*

35B. Printed name of signee: Kris Hagedom		35C. Title: Chief Accounting Officer, CONE Midstream Partners LP
35D. E-mail: Krishagedom@consolenergy.com	36E. Phone: 724-485-4023	36F. FAX:
36A. Printed name of contact person (if different from above): David Morris		36B. Title: Air Quality Manager
36C. E-mail: DavidMorris@consolenergy.com	36D. Phone: 724-485-3063	36E. FAX:

PLEASE CHECK ALL APPLICABLE ATTACHMENTS INCLUDED WITH THIS PERMIT APPLICATION:

- ☒ **Attachment A: Business Certificate**
- ☐ **Attachment B: Map(s)**
- ☐ **Attachment C: Installation and Start Up Schedule**
- ☒ **Attachment D: Regulatory Discussion**
- ☒ **Attachment E: Plot Plan**
- ☒ **Attachment F: Detailed Process Flow Diagram(s)**
- ☐ **Attachment G: Process Description**
- ☐ **Attachment H: Material Safety Data Sheets (MSDS)**
- ☒ **Attachment I: Emission Units Table**
- ☒ **Attachment J: Emission Points Data Summary Sheet**
- ☒ **Attachment K: Fugitive Emissions Data Summary Sheet**
- ☐ **Attachment L: Emissions Unit Data Sheet(s)**
- ☒ **Attachment M: Air Pollution Control Device Sheet(s)**
- ☒ **Attachment N: Supporting Emissions Calculations**
- ☐ **Attachment O: Monitoring/Recordkeeping/Reporting/Testing Plans**
- ☒ **Attachment P: Public Notice**
- ☐ **Attachment Q: Business Confidential Claims**
- ☐ **Attachment R: Authority Forms**
- ☐ **Attachment S: Title V Permit Revision Information**
- ☒ **Application Fee**

Please mail an original and three (3) copies of the complete permit application with the signature(s) to the DAQ, Permitting Section, at the address listed on the first page of this application. Please DO NOT fax permit applications.

FOR AGENCY USE ONLY – IF THIS IS A TITLE V SOURCE:

- ☐ ***Forward 1 copy of the application to the Title V Permitting Group and:***
- ☐ ***For Title V Administrative Amendments:***
  - ☐ ***NSR permit writer should notify Title V permit writer of draft permit,***
- ☐ ***For Title V Minor Modifications:***
  - ☐ ***Title V permit writer should send appropriate notification to EPA and affected states within 5 days of receipt,***
  - ☐ ***NSR permit writer should notify Title V permit writer of draft permit.***
- ☐ ***For Title V Significant Modifications processed in parallel with NSR Permit revision:***
  - ☐ ***NSR permit writer should notify a Title V permit writer of draft permit,***
  - ☐ ***Public notice should reference both 45CSR13 and Title V permits,***
  - ☐ ***EPA has 45 day review period of a draft permit.***

All of the required forms and additional information can be found under the Permitting Section of DAQ's website, or requested by phone.

Attachment F: Map of Facility Location

Oxford

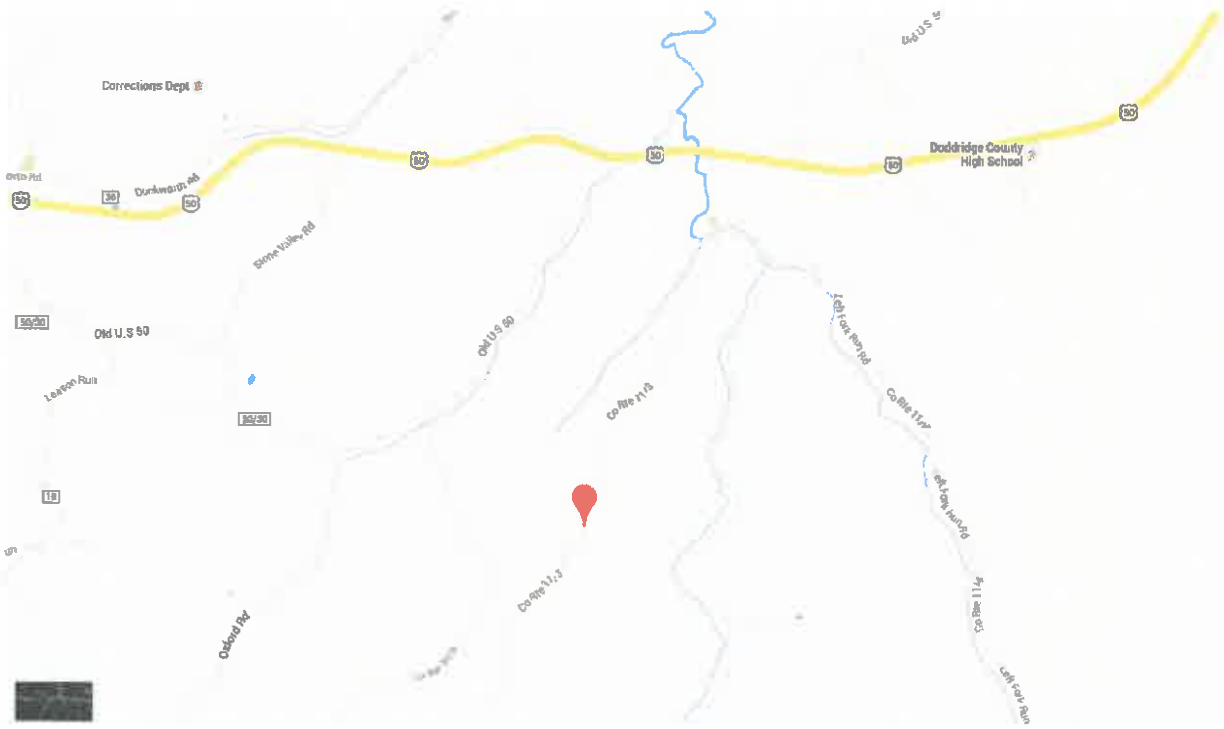

Attachment D: Regulatory Analysis

1.1.1. NSPS Subparts K, Ka, and Kb

These subparts apply to storage tanks of certain sizes constructed, reconstructed, or modified during various time periods. Subpart K applies to storage tanks constructed, reconstructed, or modified prior to 1978, and Subpart Ka applies to those constructed, reconstructed, or modified prior to 1984. Both Subparts K and Ka apply to storage tanks with a capacity greater than 40,000 gallons. Subpart Kb applies to volatile organic liquid (VOL) storage tanks constructed, reconstructed, or modified after July 23, 1984 with a capacity equal to or greater than 75 m^3 (~19,813 gallons). All of the three tanks at the Oxford Station have a capacity of 19,000 gallons or less. As such, Subparts K, Ka, and Kb do not apply to the storage tanks at the Oxford Station.

1.1.2. NSPS Subpart KKK - Equipment Leaks of VOC From Onshore Natural Gas Processing Plants

This subpart applies to affected facilities constructed, reconstructed, or modified after January 20, 1984, and on or before August 23, 2011. A natural gas processing plant is defined as any processing site engaged in the extraction of natural gas liquids from field gas, fractionation of mixed natural gas liquids to natural gas products, or both. Although this subpart includes requirements for storage tanks, it only applies to those units located at a processing plant. The operations at the Oxford Station will not meet the definition of a processing plant and will be constructed after 2011. Therefore, the requirements of this subpart do not apply to the emission units at the Oxford Station.

1.1.3. NSPS Subpart IIII - Stationary Compression Ignition Internal Combustion Engines

This subpart applies to manufacturers, owners, and operators of stationary compression ignition (CI) internal combustion engines. The Oxford Station will not have any internal combustion engines, and therefore the requirements of this subpart do not apply.

1.1.4. NSPS Subpart JJJJ - Stationary Spark Ignition Internal Combustion Engines

NSPS Subpart JJJJ affects owners and operators of stationary spark ignition internal combustion engines (SI ICE) that commence construction, reconstruction or modification after June 12, 2006. Applicability dates are based on the manufacture date for new engines. The applicability dates for new engines range from July 1, 2007 to January 1, 2009, depending upon the engine horsepower (hp) and application. The Oxford Station will not have any internal combustion engines, and therefore the requirements of this subpart do not apply.

1.1.5. NSPS Subpart OOOO—Crude Oil and Natural Gas Production, Transmission, and Distribution

On August 16, 2012, 40 CFR Part 60, Subpart OOOO (NSPS OOOO) was published as a final rule in the Federal Register. This rule applies to affected facilities that commenced construction, reconstruction or modification after August 23, 2011. The list of affected facilities for the natural gas segments under NSPS OOOO includes:

- Gas wells
- Centrifugal compressors
- Reciprocating compressors
- Pneumatic controllers

- Storage vessels
- Equipment (as defined in §60.5430) located at onshore natural gas processing plants
- Sweetening units located onshore that process natural gas produced from either onshore or offshore wells

The Oxford Compressor Station does not include gas wells, sweetening units, natural gas processing plants, or centrifugal compressors, therefore, the only potentially applicable requirements are those for reciprocating compressors, storage vessels, and pneumatic controllers. Rule applicability for each of these affected categories is discussed below.

Storage Vessels - NSPS OOOO standards applicable to storage vessels are detailed in 40 CFR §60.5395. The rule requires that storage vessels with VOC emissions equal to or greater than 6 tpy must reduce VOC emissions by 95.0% or greater. The proposed tanks at the Oxford Compressor Station will have potential VOC emissions below 6 tpy. Therefore, the storage tanks are not affected facilities under NSPS OOOO.

Pneumatic Controllers – The pneumatic controller provisions of NSPS OOOO apply in the natural gas production segment (between the wellhead and the point of custody transfer to the natural gas transmission and storage segment and not including natural gas processing plants). As defined in 40 CFR §60.5365(d)(2), the NSPS OOOO affected facility is each single continuous bleed natural gas-driven pneumatic controller operating at a natural gas bleed rate greater than 6 scfh which commences construction, modification or reconstruction (i.e., ordered) after August 23, 2011. The Oxford Compressor Station will include air-driven pneumatic devices. Therefore, the pneumatic devices are not subject to NSPS OOOO.

1.1.6. Non-Applicability of All Other NSPS

NSPS are developed for particular industrial source categories. Other than NSPS developed for natural gas processing plants (Subparts KKK, and OOOO), internal combustion engines (Subparts IIII and JJJJ), and associated equipment (Subparts K-Kb), the applicability of a particular NSPS to the Oxford Compressor Station can be readily ascertained based on the industrial source category covered. All other NSPS are categorically not applicable to natural gas compressor stations.

1.2. NATIONAL EMISSION STANDARDS FOR HAZARDOUS AIR POLLUTANTS (NESHAP)

Part 63 NESHAP allowable emission limits are established on the basis of a maximum achievable control technology (MACT) determination for a particular major source. A HAP major source is defined as having potential emissions in excess of 25 tpy for total HAP and/or potential emissions in excess of 10 tpy for any individual HAP. The Oxford Compressor Station will be an Area (minor) source of HAP since its potential emissions of HAP are less than the 10/25 major source thresholds.

Besides 40 CFR 63 Subpart A (NESHAP Subpart A), the following NESHAP could potentially apply to the Oxford Compressor Station:

- 40 CFR Part 63 HH – Oil and Natural Gas Production Facilities
- 40 CFT Part 63 HHH – Natural Gas Transmission and Storage Facilities
- 40 CFR Part 63 Subpart ZZZZ- Stationary Reciprocating Internal Combustion Engines (RICE)
- 40 CFR Part 63 Subpart JJJJJJ – Industrial, Commercial, and Institutional Boilers

The applicability of these NESHAP is discussed in the following sections.

1.2.1. 40 CFR 63 Subpart HH - Oil and Natural Gas Production Facilities

This subpart applies to affected emission points that are located at facilities that are major and area sources of HAP and either process, upgrade, or store hydrocarbon liquids prior to custody transfer or that process, upgrade, or store natural gas prior to entering the natural gas transmission and storage source category. For purposes of this subpart, natural gas enters the natural gas transmission and storage source category after the natural gas processing plant, if present.

The proposed Oxford station will be an area source of HAP emissions. The station will processes natural gas in its glycol dehydrator prior to the point of custody transfer; therefore, the provisions of NESHAP Subpart HH apply to the Oxford Station. The benzene emissions from the glycol dehydrator vents are less than 0.90 megagrams per year (1 tpy). Therefore, the Oxford Station is exempt from the requirements of NESHAP Subpart HH pursuant to 40 CFR §63.764(e)(1)(ii), except for the requirement to keep records of the actual average natural gas flow rate or actual average benzene emissions from the dehydrator, per 40 CFR §63.774(d)(1).

1.2.2. 40 CFR 63 Subpart HHH - Natural Gas Transmission and Storage Facilities

This standard applies to such units at natural gas transmission and storage facilities that are major sources of HAP emissions located downstream of the point of custody transfer (after processing and/or treatment in the production sector), but upstream of the distribution sector. The Oxford Station is not a transmission facility; therefore, the provisions of NESHAP Subpart HHH do not apply to the Oxford Station.

1.2.3. 40 CFR 63 Subpart ZZZZ - Stationary Reciprocating Internal Combustion Engines

The original rule, published on February 26, 2004, initially affected new (constructed or reconstructed after December 19, 2002) reciprocating internal combustion engines (RICE) with a site-rating greater than 500 brake horsepower located at a major source of HAP emissions. The rule has since been expanded to cover existing and new units and area and major sources of HAP.

40 CFR §63.6590(c) states that an affected source located at an area HAP source that is subject to regulations under 40 CFR Part 60, Subpart JJJJ must meet the requirements of Subpart ZZZZ by meeting the requirements of Subpart JJJJ. No further requirements apply for such engines under this part. The Oxford Compressor Station is a minor (area) source of hazardous air pollutants and the proposed engines are considered a new stationary RICE. Therefore, the requirements contained in §63.6590(c) are applicable. Cone will be in compliance with applicable requirements of 40 CFR 63 Subpart ZZZZ by meeting the applicable requirements of 40 CFR 60 Subpart JJJJ.

1.2.4. 40 CFR 63 Subpart JJJJJJ - Industrial, Commercial, and Institutional Boilers (Area Source Boiler MACT)

This MACT standard applies to industrial, commercial, and institutional boilers of various sizes and fuel types. The rule exempts natural gas combustion units at area sources. Therefore, the proposed reboiler is not subject to this rule.

Oxford Pad
Noble Energy

Properties	EQT 510821 (47-017-05643)	
Std Vapor Volumetric Flow (Total)	30*	MMSCFD
Pressure(Total)	950*	psig
Temperature(Total)	50*	°F

Properties	Cond_1	
Std Liquid Volumetric Flow (Total)	34819	gal/d

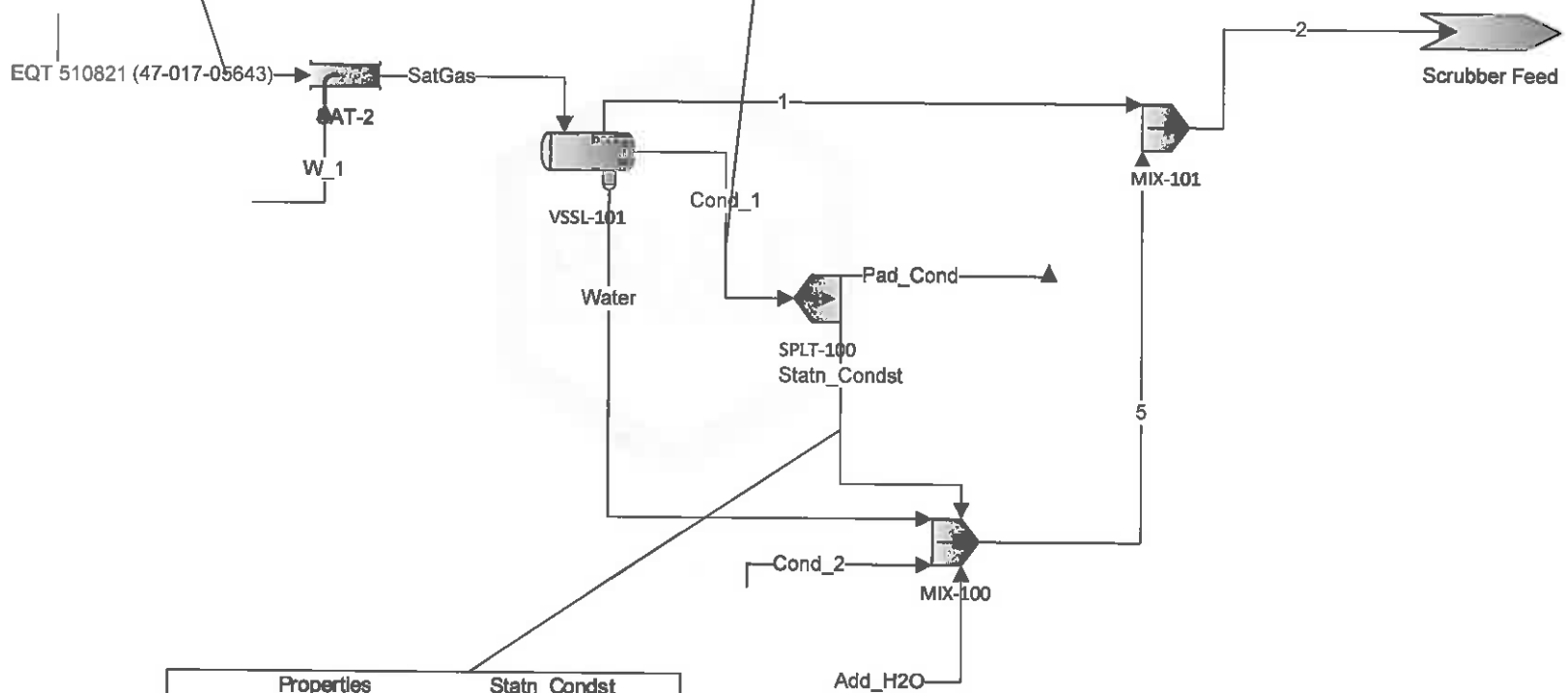

Properties	Statn_Condst	
Std Liquid Volumetric Flow (Total)	1000*	gal/d

OXFORD STATION
CONE Inlet

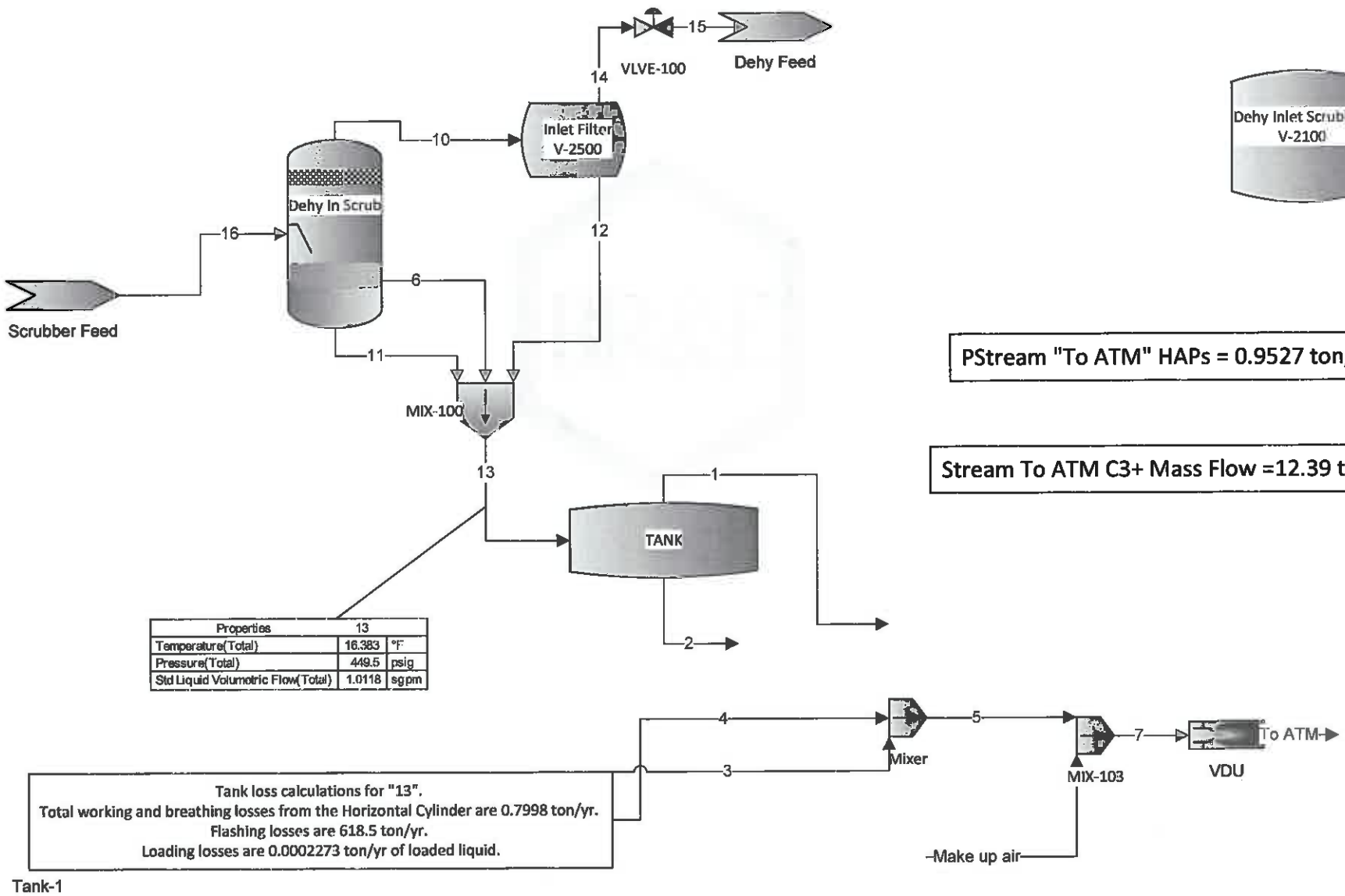

Properties	13	
Temperature(Total)	16.383	°F
Pressure(Total)	449.5	psig
Std Liquid Volumetric Flow(Total)	1.0118	sgpm

PStream "To ATM" HAPs = 0.9527 ton/yr

Stream To ATM C3+ Mass Flow =12.39 ton/yr

OXFORD STATION
DEHY

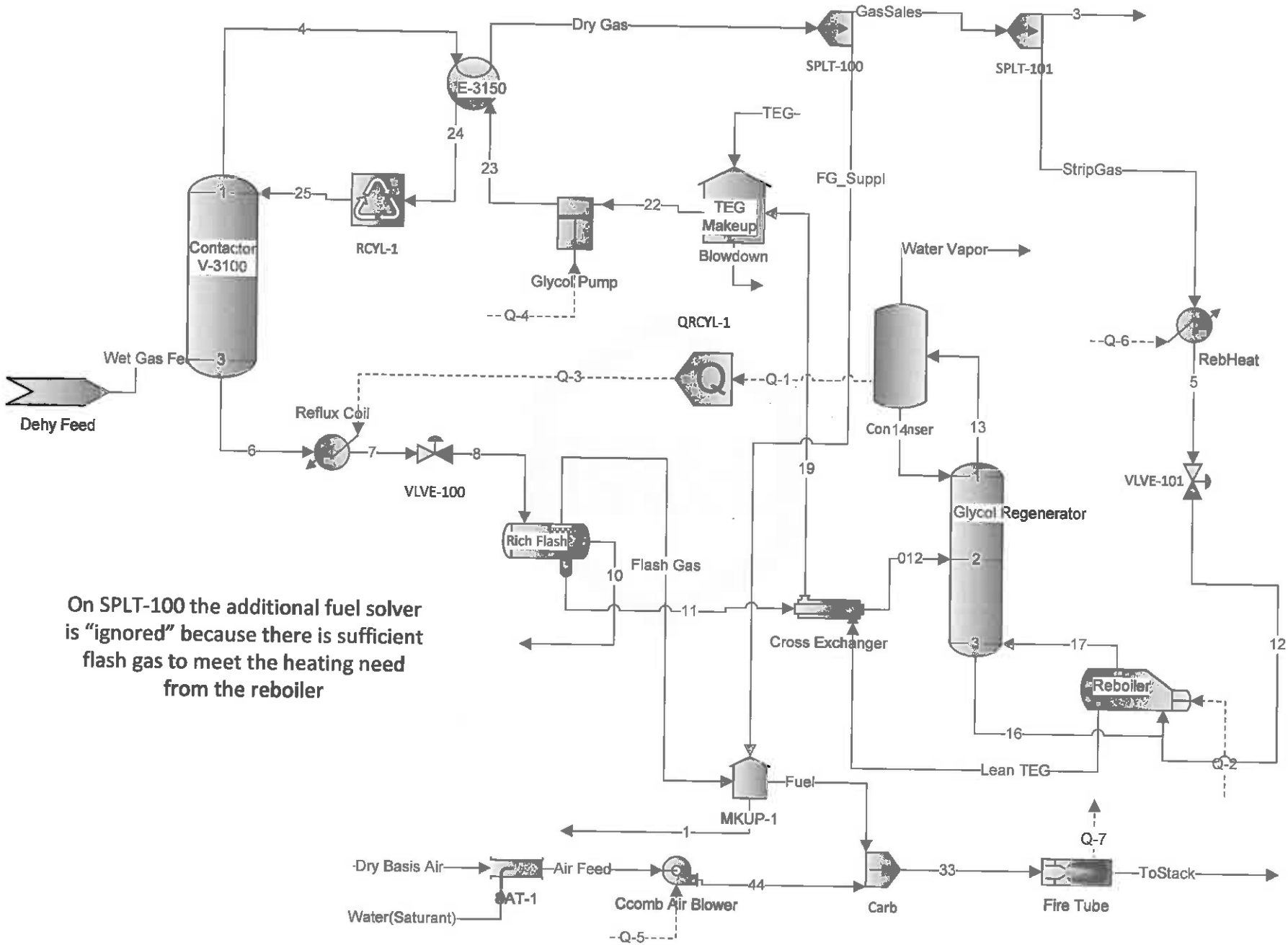

On SPLT-100 the additional fuel solver is "ignored" because there is sufficient flash gas to meet the heating need from the reboiler

Stream ToStack C3+ Mass Flow =0.0353 ton/yr

Attachment K

FUGITIVE EMISSIONS DATA SUMMARY SHEET

The FUGITIVE EMISSIONS SUMMARY SHEET provides a summation of fugitive emissions. Fugitive emissions are those emissions which could not reasonably pass through a stack, chimney, vent or other functionally equivalent opening. Note that uncaptured process emissions are not typically considered to be fugitive, and must be accounted for on the appropriate EMISSIONS UNIT DATA SHEET and on the EMISSION POINTS DATA SUMMARY SHEET.

Please note that total emissions from the source are equal to all vented emissions, all fugitive emissions, plus all other emissions (e.g. uncaptured emissions).

APPLICATION FORMS CHECKLIST - FUGITIVE EMISSIONS
1.) Will there be haul road activities? ☐ Yes ☒ No ☐ If YES, then complete the HAUL ROAD EMISSIONS UNIT DATA SHEET.
2.) Will there be Storage Piles? ☐ Yes ☒ No ☐ If YES, complete Table 1 of the NONMETALLIC MINERALS PROCESSING EMISSIONS UNIT DATA SHEET.
3.) Will there be Liquid Loading/Unloading Operations? ☒ Yes ☐ No ☐ If YES, complete the BULK LIQUID TRANSFER OPERATIONS EMISSIONS UNIT DATA SHEET.
4.) Will there be emissions of air pollutants from Wastewater Treatment Evaporation? ☐ Yes ☒ No ☐ If YES, complete the GENERAL EMISSIONS UNIT DATA SHEET.
5.) Will there be Equipment Leaks (e.g. leaks from pumps, compressors, in-line process valves, pressure relief devices, open-ended valves, sampling connections, flanges, agitators, cooling towers, etc.)? ☒ Yes ☐ No ☐ If YES, complete the LEAK SOURCE DATA SHEET section of the CHEMICAL PROCESSES EMISSIONS UNIT DATA SHEET.
6.) Will there be General Clean-up VOC Operations? ☐ Yes ☒ No ☐ If YES, complete the GENERAL EMISSIONS UNIT DATA SHEET.
7.) Will there be any other activities that generate fugitive emissions? ☐ Yes ☒ No ☐ If YES, complete the GENERAL EMISSIONS UNIT DATA SHEET or the most appropriate form.
If you answered "NO" to all of the items above, it is not necessary to complete the following table, "Fugitive Emissions Summary."

FUGITIVE EMISSIONS SUMMARY	All Regulated Pollutants Chemical Name/CAS [1]	Maximum Potential Uncontrolled Emissions [2]		Maximum Potential Controlled Emissions [3]		Est. Method Used [4]
		lb/hr	ton/yr	lb/hr	ton/yr	
Haul Road/Road Dust Emissions Paved Haul Roads						
Unpaved Haul Roads						
Storage Pile Emissions						
Loading/Unloading Operations						
Wastewater Treatment Evaporation & Operations						
Equipment Leaks		Does not apply	4.46	Does not apply	4.46	HAPCALC
General Clean-up VOC Emissions						
Other						

[1] List all regulated air pollutants. Speciate VOCs, including all HAPs. Follow chemical name with Chemical Abstracts Service (CAS) number. LIST Acids, CO, CS_2, VOCs, H_2S, Inorganics, Lead, Organics, O_3, NO, NO_2, SO_2, SO_3, all applicable Greenhouse Gases (including CO_2 and methane), etc. DO NOT LIST H_2, H_2O, N_2, O_2, and Noble Gases.

[2] Give rate with no control equipment operating. If emissions occur for less than 1 hr, then record emissions per batch in minutes (e.g. 5 lb VOC/20 minute batch).

[3] Give rate with proposed control equipment operating. If emissions occur for less than 1 hr, then record emissions per batch in minutes (e.g. 5 lb VOC/20 minute batch).

[4] Indicate method used to determine emission rate as follows: MB = material balance; ST = stack test (give date of test); EE = engineering estimate; O = other (specify).

Attachment J
EMISSION POINTS DATA SUMMARY SHEET

Table 1: Emissions Data															
Emission Point ID No. *(Must match Emission Units Table & Plot Plan)*	Emission Point Type[1]	Emission Unit Vented Through This Point *(Must match Emission Units Table & Plot Plan)*		Air Pollution Control Device *(Must match Emission Units Table & Plot Plan)*		Vent Time for Emission Unit *(chemical processes only)*		All Regulated Pollutants - Chemical Name/CAS[3] *(Speciate VOCs & HAPS)*	Maximum Potential Uncontrolled Emissions[4]		Maximum Potential Controlled Emissions[5]		Emission Form or Phase *(At exit conditions, Solid, Liquid or Gas/Vapor)*	Est. Method Used[6]	Emission Concentration[7] (ppmv or mg/m[4])
		ID No.	Source	ID No.	Device Type	Short Term[2]	Max (hr/yr)		lb/hr	ton/yr	lb/hr	ton/yr			
TV-1	vent	Tank-1		VDU-1				VOC HAP's CO2(eq)	141.4 10.87	619.5 47.64	0.0247 0.001 420.3	12.39 0.9527 1840.8	Gas/Vapor	ProMax	
VS-2	Upward Vertical stack	SV-1		FLR-1				VOC HAP's CO2(eq)	8.594 1.06 1673.03	37.642 4.649 7327.9	0.315 0.0243 33.25	1.3799 0.1063 145.64	Gas/Vapor	GLYCALC	
VS-1	Upward Vertical stack	BLR-1						NOx CO VOC PM CO2(eq)	0.099 0.082 0.005 0.008 118.2	0.43 0.36 0.024 0.033 517.77			Gas/Vapor	HAPCALC	
VS-3	Upward Vertical stack	EG-1						NOx CO VOC PM	1.784 0.5 0.12 0.06	0.446 0.125 0.03 0.015			Gas/Vapor	Man. Data	
TL-1	vent	BL-1		VDU-1				VOC	0.0015	0.006	0.001	0.004	Gas/Vapor	ProMax	

FG1	vent	FG						VOC		4.464			Gas/Vapor	HAPCALC	
VDU-S	Upward Vertical stack	VDU						NOx CO		0.0765 0.1528					

The EMISSION POINTS DATA SUMMARY SHEET provides a summation of emissions by emission unit. Note that uncaptured process emission unit emissions are not typically considered to be fugitive and must be accounted for on the appropriate EMISSIONS UNIT DATA SHEET and on the EMISSION POINTS DATA SUMMARY SHEET. Please note that total emissions from the source are equal to all vented emissions, all fugitive emissions, plus all other emissions (e.g. uncaptured emissions). Please complete the FUGITIVE EMISSIONS DATA SUMMARY SHEET for fugitive emission activities.

[1] Please add descriptors such as upward vertical stack, downward vertical stack, horizontal stack, relief vent, rain cap, etc.

[2] Indicate by "C" if venting is continuous. Otherwise, specify the average short-term venting rate with units, for intermittent venting (ie., 15 min/hr). Indicate as many rates as needed to clarify frequency of venting (e.g., 5 min/day, 2 days/wk).

[3] List all regulated air pollutants. Speciate VOCs, including all HAPs. Follow chemical name with Chemical Abstracts Service (CAS) number. **LIST** Acids, CO, CS_2, VOCs, H_2S, Inorganics, Lead, Organics, O_3, NO, NO_2, SO_2, SO_3, all applicable Greenhouse Gases (including CO_2 and methane), etc. **DO NOT LIST** H_2, H_2O, N_2, O_2, and Noble Gases.

[4] Give maximum potential emission rate with no control equipment operating. If emissions occur for less than 1 hr, then record emissions per batch in minutes (e.g. 5 lb VOC/20 minute batch).

[5] Give maximum potential emission rate with proposed control equipment operating. If emissions occur for less than 1 hr, then record emissions per batch in minutes (e.g. 5 lb VOC/20 minute batch).

[6] Indicate method used to determine emission rate as follows: MB = material balance; ST = stack test (give date of test); EE = engineering estimate; O = other (specify).

[7] Provide for all pollutant emissions. Typically, the units of parts per million by volume (ppmv) are used. If the emission is a mineral acid (sulfuric, nitric, hydrochloric or phosphoric) use units of milligram per dry cubic meter (mg/m^3) at standard conditions (68 °F and 29.92 inches Hg) (see 45CSR7). If the pollutant is SO_2, use units of ppmv (See 45CSR10).

Attachment J
EMISSION POINTS DATA SUMMARY SHEET

Table 2: Release Parameter Data

Emission Point ID No. *(Must match Emission Units Table)*	Inner Diameter (ft.)	Exit Gas			Emission Point Elevation (ft)		UTM Coordinates (km)	
		Temp. (°F)	Volumetric Flow [1] (acfm) *at operating conditions*	Velocity (fps)	Ground Level *(Height above mean sea level)*	Stack Height [2] *(Release height of emissions above ground level)*	Northing	Easting

[1] Give at operating conditions. Include Inerts.
[2] Release height of emissions above ground level.

Attachment L
EMISSIONS UNIT DATA SHEET
GENERAL

To be used for affected sources other than asphalt plants, foundries, incinerators, indirect heat exchangers, and quarries.
Identification Number (as assigned on *Equipment List Form*): BLR-1

1. Name or type and model of proposed affected source: Exterran reboiler
2. On a separate sheet(s), furnish a sketch(es) of this affected source. If a modification is to be made to this source, clearly indicated the change(s). Provide a narrative description of all features of the affected source which may affect the production of air pollutants.
3. Name(s) and maximum amount of proposed process material(s) charged per hour: no product produced, see SV-1.
4. Name(s) and maximum amount of proposed material(s) produced per hour:
5. Give chemical reactions, if applicable, that will be involved in the generation of air pollutants: heating of rich glycol.

* The identification number which appears here must correspond to the air pollution control device identification number appearing on the *List Form*.

6. Combustion Data (if applicable):

(a) Type and amount in appropriate units of fuel(s) to be burned:

natural gas, 1000 scf/hr

(b) Chemical analysis of proposed fuel(s), excluding coal, including maximum percent sulfur and ash:

Field gas, after gas is dried used for fuel.

(c) Theoretical combustion air requirement (ACF/unit of fuel):

@ °F and psia.

(d) Percent excess air:

(e) Type and BTU/hr of burners and all other firing equipment planned to be used:

1.0 MMBTU/hr burner

(f) If coal is proposed as a source of fuel, identify supplier and seams and give sizing of the coal as it will be fired:

(g) Proposed maximum design heat input: $\times 10^6$ BTU/hr.

7. Projected operating schedule:

Hours/Day	24	Days/Week	7	Weeks/Year	52

8. Projected amount of pollutants that would be emitted from this affected source if no control devices were used:

@ °F and psia

a. NO_X	0.099 lb/hr		grains/ACF
b. SO_2	0 lb/hr		grains/ACF
c. CO	0.082 lb/hr		grains/ACF
d. PM_{10}	0.008 lb/hr	0	grains/ACF
e. Hydrocarbons	lb/hr		grains/ACF
f. VOCs	0.005 lb/hr		grains/ACF
g. Pb	0 lb/hr		grains/ACF
h. Specify other(s)			
	lb/hr		grains/ACF
	lb/hr		grains/ACF
	lb/hr		grains/ACF
	lb/hr		grains/ACF

NOTE: (1) An Air Pollution Control Device Sheet must be completed for any air pollution device(s) used to control emissions from this affected source.

(2) Complete the Emission Points Data Sheet.

9. Proposed Monitoring, Recordkeeping, Reporting, and Testing
Please propose monitoring, recordkeeping, and reporting in order to demonstrate compliance with the proposed operating parameters. Please propose testing in order to demonstrate compliance with the proposed emissions limits.

MONITORING	RECORDKEEPING hours of operation
REPORTING	TESTING

MONITORING. PLEASE LIST AND DESCRIBE THE PROCESS PARAMETERS AND RANGES THAT ARE PROPOSED TO BE MONITORED IN ORDER TO DEMONSTRATE COMPLIANCE WITH THE OPERATION OF THIS PROCESS EQUIPMENT OPERATION/AIR POLLUTION CONTROL DEVICE.

RECORDKEEPING. PLEASE DESCRIBE THE PROPOSED RECORDKEEPING THAT WILL ACCOMPANY THE MONITORING.

REPORTING. PLEASE DESCRIBE THE PROPOSED FREQUENCY OF REPORTING OF THE RECORDKEEPING.

TESTING. PLEASE DESCRIBE ANY PROPOSED EMISSIONS TESTING FOR THIS PROCESS EQUIPMENT/AIR POLLUTION CONTROL DEVICE.

10. Describe all operating ranges and maintenance procedures required by Manufacturer to maintain warranty

Attachment L
EMISSIONS UNIT DATA SHEET
GENERAL

To be used for affected sources other than asphalt plants, foundries, incinerators, indirect heat exchangers, and quarries.

Identification Number (as assigned on *Equipment List Form*): SV-1

1. Name or type and model of proposed affected source: Exterran dehydrator
2. On a separate sheet(s), furnish a sketch(es) of this affected source. If a modification is to be made to this source, clearly indicated the change(s). Provide a narrative description of all features of the affected source which may affect the production of air pollutants.
3. Name(s) and maximum amount of proposed process material(s) charged per hour: 50 Million cubic feet of natural gas per day, or 2.08 million cubic feet per hour.
4. Name(s) and maximum amount of proposed material(s) produced per hour: 2.08 million cubic feet of dry natural gas
5. Give chemical reactions, if applicable, that will be involved in the generation of air pollutants: Adsorption of water and hydrocarbons by glycol. Gylcol then heated dirving off the water and some VOC's.

* The identification number which appears here must correspond to the air pollution control device identification number appearing on the *List Form*.

6. Combustion Data (if applicable):

(a) Type and amount in appropriate units of fuel(s) to be burned:

Combustion covered under reboiler, BLR-1

(b) Chemical analysis of proposed fuel(s), excluding coal, including maximum percent sulfur and ash:

(c) Theoretical combustion air requirement (ACF/unit of fuel):

@ °F and psia.

(d) Percent excess air:

(e) Type and BTU/hr of burners and all other firing equipment planned to be used:

(f) If coal is proposed as a source of fuel, identify supplier and seams and give sizing of the coal as it will be fired:

(g) Proposed maximum design heat input: $\times 10^6$ BTU/hr.

7. Projected operating schedule:

Hours/Day	24	Days/Week	7	Weeks/Year	52

8. Projected amount of pollutants that would be emitted from this affected source if no control devices were used:

@ °F and psia

a.	NO_X	0	lb/hr	grains/ACF
b.	SO_2	0	lb/hr	grains/ACF
c.	CO	0	lb/hr	grains/ACF
d.	PM_{10}	0	lb/hr	grains/ACF
e.	Hydrocarbons	0.1324	lb/hr	grains/ACF
f.	VOCs	0.0966	lb/hr	grains/ACF
g.	Pb	0	lb/hr	grains/ACF
h.	Specify other(s)			
	n-hexane	0.0012	lb/hr	grains/ACF
	Toluene	0.0114	lb/hr	grains/ACF
	Xylene	0.0086	lb/hr	grains/ACF
			lb/hr	grains/ACF

NOTE: (1) An Air Pollution Control Device Sheet must be completed for any air pollution device(s) used to control emissions from this affected source.

(2) Complete the Emission Points Data Sheet.

9. Proposed Monitoring, Recordkeeping, Reporting, and Testing
Please propose monitoring, recordkeeping, and reporting in order to demonstrate compliance with the proposed operating parameters. Please propose testing in order to demonstrate compliance with the proposed emissions limits.

MONITORING	RECORDKEEPING
operating pressure	hours of operation gas volume processed
REPORTING	**TESTING**

MONITORING. PLEASE LIST AND DESCRIBE THE PROCESS PARAMETERS AND RANGES THAT ARE PROPOSED TO BE MONITORED IN ORDER TO DEMONSTRATE COMPLIANCE WITH THE OPERATION OF THIS PROCESS EQUIPMENT OPERATION/AIR POLLUTION CONTROL DEVICE.

RECORDKEEPING. PLEASE DESCRIBE THE PROPOSED RECORDKEEPING THAT WILL ACCOMPANY THE MONITORING.

REPORTING. PLEASE DESCRIBE THE PROPOSED FREQUENCY OF REPORTING OF THE RECORDKEEPING.

TESTING. PLEASE DESCRIBE ANY PROPOSED EMISSIONS TESTING FOR THIS PROCESS EQUIPMENT/AIR POLLUTION CONTROL DEVICE.

10. Describe all operating ranges and maintenance procedures required by Manufacturer to maintain warranty

Attachment L
EMISSIONS UNIT DATA SHEET
STORAGE TANKS

Provide the following information for each new or modified bulk liquid storage tank as shown on the *Equipment List Form* and other parts of this application. A tank is considered modified if the material to be stored in the tank is different from the existing stored liquid.

IF USING US EPA'S TANKS EMISSION ESTIMATION PROGRAM (AVAILABLE AT **www.epa.gov/tnn/tanks.html**), APPLICANT MAY ATTACH THE SUMMARY SHEETS IN LIEU OF COMPLETING SECTIONS III, IV, & V OF THIS FORM. HOWEVER, SECTIONS I, II, AND VI OF THIS FORM MUST BE COMPLETED. US EPA'S AP-42, SECTION 7.1, "ORGANIC LIQUID STORAGE TANKS," MAY ALSO BE USED TO ESTIMATE VOC AND HAP EMISSIONS (**http://www.epa.gov/tnn/chief/**).

I. GENERAL INFORMATION (required)

1. Bulk Storage Area Name	2. Tank Name Tank-1
3. Tank Equipment Identification No. (as assigned on *Equipment List Form*) Tank-1	4. Emission Point Identification No. (as assigned on *Equipment List Form*)
5. Date of Commencement of Construction (for existing tanks)	
6. Type of change ☒ New Construction ☐ New Stored Material ☐ Other Tank Modification	
7. Description of Tank Modification (if applicable)	
7A. Does the tank have more than one mode of operation? (e.g. Is there more than one product stored in the tank?) ☐ Yes ☒ No	
7B. If YES, explain and identify which mode is covered by this application (Note: A separate form must be completed for each mode).	
7C. Provide any limitations on source operation affecting emissions, any work practice standards (e.g. production variation, etc.):	

II. TANK INFORMATION (required)

8. Design Capacity (specify barrels or gallons). Use the internal cross-sectional area multiplied by internal height. 6000 gallons	
9A. Tank Internal Diameter (ft) 10	9B. Tank Internal Height (or Length) (ft) 8.2
10A. Maximum Liquid Height (ft) 8	10B. Average Liquid Height (ft) 4
11A. Maximum Vapor Space Height (ft)	11B. Average Vapor Space Height (ft) 6
12. Nominal Capacity (specify barrels or gallons). This is also known as "working volume" and considers design liquid levels and overflow valve heights. 6000	

13A. Maximum annual throughput (gal/yr)	13B. Maximum daily throughput (gal/day)
547500	1500

14. Number of Turnovers per year (annual net throughput/maximum tank liquid volume) 91.25

15. Maximum tank fill rate (gal/min) 5

16. Tank fill method ☒ Submerged ☐ Splash ☐ Bottom Loading

17. Complete 17A and 17B for Variable Vapor Space Tank Systems ☒ Does Not Apply

17A. Volume Expansion Capacity of System (gal)	17B. Number of transfers into system per year

18. Type of tank (check all that apply):

☒ Fixed Roof X vertical ___ horizontal ___ flat roof ___ cone roof ___ dome roof
___ other (describe)

☐ External Floating Roof ___ pontoon roof ___ double deck roof

☐ Domed External (or Covered) Floating Roof

☐ Internal Floating Roof ___ vertical column support ___ self-supporting

☐ Variable Vapor Space ___ lifter roof ___ diaphragm

☐ Pressurized ___ spherical ___ cylindrical

☐ Underground

☐ Other (describe)

III. TANK CONSTRUCTION & OPERATION INFORMATION (optional if providing TANKS Summary Sheets)

19. Tank Shell Construction:
☒ Riveted ☐ Gunite lined ☐ Epoxy-coated rivets ☐ Other (describe)

20A. Shell Color Grey	20B. Roof Color Grey	20C. Year Last Painted 2014

21. Shell Condition (if metal and unlined):
☒ No Rust ☐ Light Rust ☐ Dense Rust ☐ Not applicable

22A. Is the tank heated? ☐ YES ☒ NO

22B. If YES, provide the operating temperature (°F)

22C. If YES, please describe how heat is provided to tank.

23. Operating Pressure Range (psig): 0 to 0.5 psi

24. Complete the following section for **Vertical Fixed Roof Tanks** ☐ Does Not Apply

24A. For dome roof, provide roof radius (ft)

24B. For cone roof, provide slope (ft/ft) 0.0625

25. Complete the following section for **Floating Roof Tanks** ☒ Does Not Apply

25A. Year Internal Floaters Installed:

25B. Primary Seal Type: (check one) ☐ Metallic (Mechanical) Shoe Seal ☐ Liquid Mounted Resilient Seal ☐ Vapor Mounted Resilient Seal ☐ Other (describe):

25C. Is the Floating Roof equipped with a Secondary Seal? ☐ YES ☐ NO

25D. If YES, how is the secondary seal mounted? (check one) ☐ Shoe ☐ Rim ☐ Other (describe):

25E. Is the Floating Roof equipped with a weather shield? ☐ YES ☐ NO

25F. Describe deck fittings; indicate the number of each type of fitting:		
ACCESS HATCH		
BOLT COVER, GASKETED: 1	UNBOLTED COVER, GASKETED: 0	UNBOLTED COVER, UNGASKETED: 0
AUTOMATIC GAUGE FLOAT WELL		
BOLT COVER, GASKETED: 1	UNBOLTED COVER, GASKETED: 0	UNBOLTED COVER, UNGASKETED: 0
COLUMN WELL		
BUILT-UP COLUMN – SLIDING COVER, GASKETED: 2	BUILT-UP COLUMN – SLIDING COVER, UNGASKETED: 0	PIPE COLUMN – FLEXIBLE FABRIC SLEEVE SEAL: 0
LADDER WELL		
PIP COLUMN – SLIDING COVER, GASKETED: 1	PIPE COLUMN – SLIDING COVER, UNGASKETED: 0	
GAUGE-HATCH/SAMPLE PORT		
SLIDING COVER, GASKETED: 1	SLIDING COVER, UNGASKETED: 0	
ROOF LEG OR HANGER WELL		
WEIGHTED MECHANICAL ACTUATION, GASKETED: 0	WEIGHTED MECHANICAL ACTUATION, UNGASKETED: 1	SAMPLE WELL-SLIT FABRIC SEAL (10% OPEN AREA) 0
VACUUM BREAKER		
WEIGHTED MECHANICAL ACTUATION, GASKETED: 2	WEIGHTED MECHANICAL ACTUATION, UNGASKETED: 0	
RIM VENT		
WEIGHTED MECHANICAL ACTUATION GASKETED:	WEIGHTED MECHANICAL ACTUATION, UNGASKETED:	
DECK DRAIN (3-INCH DIAMETER)		
OPEN:	90% CLOSED:	
STUB DRAIN		
1-INCH DIAMETER:		
OTHER (DESCRIBE, ATTACH ADDITIONAL PAGES IF NECESSARY)		

26. Complete the following section for Internal Floating Roof Tanks ☐ Does Not Apply		
26A. Deck Type: ☐ Bolted ☐ Welded		
26B. For Bolted decks, provide deck construction:		
26C. Deck seam: ☐ Continuous sheet construction 5 feet wide ☐ Continuous sheet construction 6 feet wide ☐ Continuous sheet construction 7 feet wide ☐ Continuous sheet construction 5 × 7.5 feet wide ☐ Continuous sheet construction 5 × 12 feet wide ☐ Other (describe)		
26D. Deck seam length (ft)	26E. Area of deck (ft^2)	
For column supported tanks: 26F. Number of columns:	26G. Diameter of each column:	

IV. SITE INFORMANTION (optional if providing TANKS Summary Sheets)

27. Provide the city and state on which the data in this section are based. Huntington, WV	
28. Daily Average Ambient Temperature (°F)	65.3
29. Annual Average Maximum Temperature (°F)	65.3
30. Annual Average Minimum Temperature (°F)	45
31. Average Wind Speed (miles/hr)	
32. Annual Average Solar Insulation Factor (BTU/(ft^2·day))	
33. Atmospheric Pressure (psia)	

V. LIQUID INFORMATION (optional if providing TANKS Summary Sheets)

34. Average daily temperature range of bulk liquid:	
34A. Minimum (°F)	34B. Maximum (°F)
35. Average operating pressure range of tank:	
35A. Minimum (psig)	35B. Maximum (psig)
36A. Minimum Liquid Surface Temperature (°F)	36B. Corresponding Vapor Pressure (psia)
37A. Average Liquid Surface Temperature (°F) 63.19	37B. Corresponding Vapor Pressure (psia)
38A. Maximum Liquid Surface Temperature (°F) 72.44	38B. Corresponding Vapor Pressure (psia)

39. Provide the following for <u>each</u> liquid or gas to be stored in tank. Add additional pages if necessary.

39A. Material Name or Composition	water		
39B. CAS Number			
39C. Liquid Density (lb/gal)			
39D. Liquid Molecular Weight (lb/lb-mole)	18		
39E. Vapor Molecular Weight (lb/lb-mole)			

Maximum Vapor Pressure 39F. True (psia) 39G. Reid (psia)			
Months Storage per Year 39H. From 39I. To			

VI. EMISSIONS AND CONTROL DEVICE DATA (required)

40. Emission Control Devices (check as many as apply): ☐ Does Not Apply

- ☐ Carbon Adsorption[1]
- ☐ Condenser[1]
- ☐ Conservation Vent (psig)
  - Vacuum Setting Pressure Setting
- ☐ Emergency Relief Valve (psig)
- ☐ Inert Gas Blanket of
- ☐ Insulation of Tank with
- ☐ Liquid Absorption (scrubber)[1]
- ☐ Refrigeration of Tank
- ☐ Rupture Disc (psig)
- ☒ Vent to Incinerator[1]
- ☐ Other[1] (describe):

[1] Complete appropriate Air Pollution Control Device Sheet.

41. Expected Emission Rate (submit Test Data or Calculations here or elsewhere in the application).

Material Name & CAS No.	Breathing Loss (lb/hr)	Working Loss		Annual Loss (lb/yr)	Estimation Method[1]
		Amount	Units		
VOC		0.7998	tons	1599.6	Promax

[1] EPA = EPA Emission Factor, MB = Material Balance, SS = Similar Source, ST = Similar Source Test, Throughput Data, O = Other (specify)

☐ Remember to attach emissions calculations, including TANKS Summary Sheets if applicable.

Attachment L
EMISSIONS UNIT DATA SHEET
GENERAL

To be used for affected sources other than asphalt plants, foundries, incinerators, indirect heat exchangers, and quarries.

Identification Number (as assigned on *Equipment List Form*): EG-1

1. Name or type and model of proposed affected source: Back-up Generator: Cummins 100 DSGAA
2. On a separate sheet(s), furnish a sketch(es) of this affected source. If a modification is to be made to this source, clearly indicated the change(s). Provide a narrative description of all features of the affected source which may affect the production of air pollutants.
3. Name(s) and maximum amount of proposed process material(s) charged per hour: 500 hours/ year of operation
4. Name(s) and maximum amount of proposed material(s) produced per hour:
5. Give chemical reactions, if applicable, that will be involved in the generation of air pollutants:

* The identification number which appears here must correspond to the air pollution control device identification number appearing on the *List Form*.

6. Combustion Data (if applicable):

(a) Type and amount in appropriate units of fuel(s) to be burned:

Off Road diesel, 7.75 gallons/hour

(b) Chemical analysis of proposed fuel(s), excluding coal, including maximum percent sulfur and ash:

EPA certified off road diesel

(c) Theoretical combustion air requirement (ACF/unit of fuel):

@ °F and psia.

(d) Percent excess air:

(e) Type and BTU/hr of burners and all other firing equipment planned to be used:

(f) If coal is proposed as a source of fuel, identify supplier and seams and give sizing of the coal as it will be fired:

(g) Proposed maximum design heat input: $\times 10^6$ BTU/hr.

7. Projected operating schedule:

Hours/Day	Days/Week	Weeks/Year

8. Projected amount of pollutants that would be emitted from this affected source if no control devices were used:

@ °F and psia

a.	NO_X	1.784	lb/hr	grains/ACF
b.	SO_2	0.0004	lb/hr	grains/ACF
c.	CO	0.5	lb/hr	grains/ACF
d.	PM_{10}	0.06	lb/hr	grains/ACF
e.	Hydrocarbons		lb/hr	grains/ACF
f.	VOCs	0.12	lb/hr	grains/ACF
g.	Pb	0	lb/hr	grains/ACF
h.	Specify other(s)			
			lb/hr	grains/ACF
			lb/hr	grains/ACF
			lb/hr	grains/ACF
			lb/hr	grains/ACF

NOTE: (1) An Air Pollution Control Device Sheet must be completed for any air pollution device(s) used to control emissions from this affected source.

(2) Complete the Emission Points Data Sheet.

9. Proposed Monitoring, Recordkeeping, Reporting, and Testing
Please propose monitoring, recordkeeping, and reporting in order to demonstrate compliance with the proposed operating parameters. Please propose testing in order to demonstrate compliance with the proposed emissions limits.

MONITORING	RECORDKEEPING hours of operation fuel certification
REPORTING	TESTING

MONITORING. PLEASE LIST AND DESCRIBE THE PROCESS PARAMETERS AND RANGES THAT ARE PROPOSED TO BE MONITORED IN ORDER TO DEMONSTRATE COMPLIANCE WITH THE OPERATION OF THIS PROCESS EQUIPMENT OPERATION/AIR POLLUTION CONTROL DEVICE.

RECORDKEEPING. PLEASE DESCRIBE THE PROPOSED RECORDKEEPING THAT WILL ACCOMPANY THE MONITORING.

REPORTING. PLEASE DESCRIBE THE PROPOSED FREQUENCY OF REPORTING OF THE RECORDKEEPING.

TESTING. PLEASE DESCRIBE ANY PROPOSED EMISSIONS TESTING FOR THIS PROCESS EQUIPMENT/AIR POLLUTION CONTROL DEVICE.

10. Describe all operating ranges and maintenance procedures required by Manufacturer to maintain warranty

Attachment M
Air Pollution Control Device Sheet
(FLARE SYSTEM)

Control Device ID No. (must match Emission Units Table): VDU-1

Equipment Information

1. Manufacturer: Abutech Model No. MTF 2.7	2. Method: ☐ Elevated flare ☒ Ground flare ☐ Other Describe
3. Provide diagram(s) of unit describing capture system with duct arrangement and size of duct, air volume, capacity, horsepower of movers. If applicable, state hood face velocity and hood collection efficiency.	
4. Method of system used: ☐ Steam-assisted ☐ Air-assisted ☐ Pressure-assisted ☒ Non-assisted	
5. Maximum capacity of flare: scf/min 4166 scf/hr	6. Dimensions of stack: Diameter 3.6 ft. Height 16.25 ft.
7. Estimated combustion efficiency: (Waste gas destruction efficiency) Estimated: 98 % Minimum guaranteed: 98 %	8. Fuel used in burners: ☒ Natural Gas ☐ Fuel Oil, Number ☐ Other, Specify:
9. Number of burners: Rating: 9.21 MM BTU/hr 10. Will preheat be used? ☐ Yes ☒ No	11. Describe method of controlling flame: thermocouple
12. Flare height: ft 13. Flare tip inside diameter: ft	14. Natural gas flow rate to flare pilot flame per pilot light: scf/min 100 scf/hr
15. Number of pilot lights: Total 0.3 BTU/hr	16. Will automatic re-ignition be used? ☒ Yes ☐ No
17. If automatic re-ignition will be used, describe the method: Electrical restart	
18. Is pilot flame equipped with a monitor? ☒ Yes ☐ No If yes, what type? ☒ Thermocouple ☐ Infra-Red ☐ Ultra Violet ☐ Camera with monitoring control room ☐ Other, Describe:	
19. Hours of unit operation per year: 8760	

Steam Injection

20. Will steam injection be used? ☐ Yes ☒ No	21. Steam pressure PSIG Minimum Expected: Design Maximum:
22. Total Steam flow rate: LB/hr	23. Temperature: °F
24. Velocity ft/sec	25. Number of jet streams
26. Diameter of steam jets: in	27. Design basis for steam injected: LB steam/LB hydrocarbon
28. How will steam flow be controlled if steam injection is used?	

Characteristics of the Waste Gas Stream to be Burned

29.

Name	Quantity Grains of H_2S/100 ft^3	Quantity (LB/hr, ft^3/hr, etc)	Source of Material
vapor	0	977 ft3/hr	flash gas

30. Estimate total combustible to flare: LB/hr or ACF/hr
(Maximum mass flow rate of waste gas) 16 scfm

31. Estimated total flow rate to flare including materials to be burned, carrier gases, auxiliary fuel, etc.:
LB/hr or ACF/hr

32. Give composition of carrier gases:
methane, ethane, propan, butane, pentane

33. Temperature of emission stream: °F Heating value of emission stream: BTU/ft^3 Mean molecular weight of emission stream: MW = lb/lb-mole	34. Identify and describe all auxiliary fuels to be burned. BTU/scf BTU/scf BTU/scf BTU/scf
35. Temperature of flare gas: 2100 °F	36. Flare gas flow rate: 4167 scf/min
37. Flare gas heat content: BTU/ft^3	38. Flare gas exit velocity: scf/min

39. Maximum rate during emergency for one major piece of equipment or process unit: scf/min

40. Maximum rate during emergency for one major piece of equipment or process unit: BTU/min

41. Describe any air pollution control device inlet and outlet gas conditioning processes (e.g., gas cooling, gas reheating, gas humidification):

42. Describe the collection material disposal system:

43. Have you included ***Flare Control Device*** in the Emissions Points Data Summary Sheet?

44. **Proposed Monitoring, Recordkeeping, Reporting, and Testing**
Please propose monitoring, recordkeeping, and reporting in order to demonstrate compliance with the proposed operating parameters. Please propose testing in order to demonstrate compliance with the proposed emissions limits.

MONITORING:	RECORDKEEPING:
REPORTING:	TESTING:

MONITORING:	Please list and describe the process parameters and ranges that are proposed to be monitored in order to demonstrate compliance with the operation of this process equipment or air control device.
RECORDKEEPING:	Please describe the proposed recordkeeping that will accompany the monitoring.
REPORTING:	Please describe any proposed emissions testing for this process equipment on air pollution control device.
TESTING:	Please describe any proposed emissions testing for this process equipment on air pollution control device.

45. Manufacturer's Guaranteed Capture Efficiency for each air pollutant.

46. Manufacturer's Guaranteed Control Efficiency for each air pollutant.
98% for all VOC

47. Describe all operating ranges and maintenance procedures required by Manufacturer to maintain warranty.

Attachment M
Air Pollution Control Device Sheet
(FLARE SYSTEM)

Control Device ID No. (must match Emission Units Table): FLR-1

Equipment Information

1. Manufacturer: Exterran

   Model No.

2. Method:
   - ☐ Elevated flare
   - ☒ Ground flare
   - ☐ Other
   - Describe

3. Provide diagram(s) of unit describing capture system with duct arrangement and size of duct, air volume, capacity, horsepower of movers. If applicable, state hood face velocity and hood collection efficiency.

4. Method of system used:
   ☐ Steam-assisted ☐ Air-assisted ☐ Pressure-assisted ☒ Non-assisted

5. Maximum capacity of flare:
   scf/min
   2850 scf/hr

6. Dimensions of stack:
   Diameter 3 ft.
   Height 20 ft.

7. Estimated combustion efficiency:
   (Waste gas destruction efficiency)
   Estimated: 98 %
   Minimum guaranteed: 98 %

8. Fuel used in burners:
   - ☒ Natural Gas
   - ☐ Fuel Oil, Number
   - ☐ Other, Specify:

9. Number of burners:
   Rating: 6.0 MM BTU/hr

10. Will preheat be used? ☐ Yes ☒ No

11. Describe method of controlling flame:
    thermocouple

12. Flare height: 20 ft

13. Flare tip inside diameter: ft

14. Natural gas flow rate to flare pilot flame per pilot light: scf/min
    88 scf/hr

15. Number of pilot lights:
    Total 0.088 BTU/hr

16. Will automatic re-ignition be used?
    ☒ Yes ☐ No

17. If automatic re-ignition will be used, describe the method:
    Electrical restart

18. Is pilot flame equipped with a monitor? ☒ Yes ☐ No
    If yes, what type?
    - ☒ Thermocouple
    - ☐ Infra-Red
    - ☐ Ultra Violet
    - ☐ Camera with monitoring control room
    - ☐ Other, Describe:

19. Hours of unit operation per year: 8760

Steam Injection

20. Will steam injection be used? ☐ Yes ☒ No	21. Steam pressure PSIG Minimum Expected: Design Maximum:
22. Total Steam flow rate: LB/hr	23. Temperature: °F
24. Velocity ft/sec	25. Number of jet streams
26. Diameter of steam jets: in	27. Design basis for steam injected: LB steam/LB hydrocarbon
28. How will steam flow be controlled if steam injection is used?	

Characteristics of the Waste Gas Stream to be Burned

29.

Name	Quantity Grains of H_2S/100 ft^3	Quantity (LB/hr, ft^3/hr, etc)	Source of Material
vapor	0	977 ft3/hr	flash gas

30. Estimate total combustible to flare: LB/hr or ACF/hr
(Maximum mass flow rate of waste gas) 16 scfm

31. Estimated total flow rate to flare including materials to be burned, carrier gases, auxiliary fuel, etc.:
LB/hr or ACF/hr

32. Give composition of carrier gases:
methane, ethane, propan, butane, pentane

33. Temperature of emission stream: 2100 °F Heating value of emission stream: BTU/ft^3 Mean molecular weight of emission stream: MW = lb/lb-mole	34. Identify and describe all auxiliary fuels to be burned. BTU/scf BTU/scf BTU/scf BTU/scf
35. Temperature of flare gas: 2100 °F	36. Flare gas flow rate: 4167 scf/min
37. Flare gas heat content: 1160 BTU/ft^3	38. Flare gas exit velocity: scf/min

39. Maximum rate during emergency for one major piece of equipment or process unit: scf/min

40. Maximum rate during emergency for one major piece of equipment or process unit: BTU/min

41. Describe any air pollution control device inlet and outlet gas conditioning processes (e.g., gas cooling, gas reheating, gas humidification):

42. Describe the collection material disposal system:

43. Have you included ***Flare Control Device*** in the Emissions Points Data Summary Sheet?

44. **Proposed Monitoring, Recordkeeping, Reporting, and Testing**
Please propose monitoring, recordkeeping, and reporting in order to demonstrate compliance with the proposed operating parameters. Please propose testing in order to demonstrate compliance with the proposed emissions limits.

MONITORING:	RECORDKEEPING:
REPORTING:	TESTING:

MONITORING:	Please list and describe the process parameters and ranges that are proposed to be monitored in order to demonstrate compliance with the operation of this process equipment or air control device.
RECORDKEEPING:	Please describe the proposed recordkeeping that will accompany the monitoring.
REPORTING:	Please describe any proposed emissions testing for this process equipment on air pollution control device.
TESTING:	Please describe any proposed emissions testing for this process equipment on air pollution control device.

45. Manufacturer's Guaranteed Capture Efficiency for each air pollutant.

46. Manufacturer's Guaranteed Control Efficiency for each air pollutant.
98% for all VOC
98% for all HAP's

47. Describe all operating ranges and maintenance procedures required by Manufacturer to maintain warranty.

GRI-HAPCalc ® 3.01
Fugitive Emissions Report

Facility ID:	**OXFORD**	**Notes:**
Operation Type:	**GAS PLANT**	
Facility Name:	**OXFORD STATION**	
User Name:		
Units of Measure:	**U.S. STANDARD**	

Note: ***Emissions less than 5.00E-09 tons (or tonnes) per year are considered insignificant and are treated as zero. These emissions are indicated on the report with a "0". Emissions between 5.00E-09 and 5.00E-05 tons (or tonnes) per year are represented on the report with "0.0000".***

Fugitive Emissions

Calculation Method: EPA Average Factors

User Inputs

Component	Gas Service	Light Liquid Service	Heavy Liquid Service
Connections:	1000	0	0
Flanges	650	20	0
Open-Ended Lines:	50	5	0
Pumps:	4	1	0
Valves:	150	20	0
Others:	50	10	0

Calculated Emissions (ton/yr)

Chemical Name	Emissions
HAPs	
Benzene	0.0199
Toluene	0.0062
Ethylbenzene	0.0004
Xylenes(m,p,o)	0.0012
Total	0.0277
Criteria Pollutants	
NMHC	7.6803
NMEHC	4.4643

GRI-HAPCalc ® 3.01
Flares Report

Facility ID:	**OXFORD**	**Notes:**
Operation Type:	**GAS PLANT**	
Facility Name:	**OXFORD STATION**	
User Name:		
Units of Measure:	**U.S. STANDARD**	

Note: Emissions less than 5.00E-09 tons (or tonnes) per year are considered insignificant and are treated as zero. These emissions are indicated on the report with a "0". Emissions between 5.00E-09 and 5.00E-05 tons (or tonnes) per year are represented on the report with "0.0000".
Note: The molecular weights of ethane and propane were used to calculate emissions for NMHC and NMEHC, respectively.
Note: The value for total reduced sulfur (TRS) includes sulfur from all sulfur-containing species except SO2.

Flare Unit

Unit Name: FLR-1

Hours of Operation:	8,760 Yearly	**Efficiency:**	98.00 %
Volume:	2.70 scf/hr	**Volume Gas to Pilot:**	0.000 scf/hr
Gas Heat Value:	1,236.30 Btu/scf (HHV)	**Pilot Gas Sulfur Content:**	0.00 grains/100scf
Flare Design:	STEAM ASSISTED		

User Concentration Inputs

Chemical Name	Mole %
NMHC	26.2800
NMEHC	4.0590
Benzene	0.0000
Toluene	0.0000
Ethylbenzene	0.0000
Xylenes(m,p,o)	0.0000
n-Hexane	0.0012
2,2,4-Trimethylpentane	0.0000
Total Reduced Sulfur	0.0000
Hydrogen Sulfide	0.0000
Carbon Disulfide	0.0000
Carbonyl Sulfide	0.0000

Calculated Emissions (ton/yr)

	Chemical Name	Emissions
HAPs		
	Formaldehyde	0.0000
	n-Hexane	0.0000
Total		0.0000
Criteria Pollutants		
	CO	0.0051
	NMHC	0.0049
	NMEHC	0.0011

NOx	0.0007

Unit Name: VDU-1

Hours of Operation:	8,760 Yearly	**Efficiency:**	98.00 %
Volume:	67.00 scf/hr	**Volume Gas to Pilot:**	0.000 scf/hr
Gas Heat Value:	1,890.00 Btu/scf (HHV)	**Pilot Gas Sulfur Content:**	0.00 grains/100scf
Flare Design:	OTHER		

User Concentration Inputs

Chemical Name	Mole %
NMHC	66.5200
NMEHC	49.0131
Benzene	0.0000
Toluene	0.0000
Ethylbenzene	0.0000
Xylenes(m,p,o)	0.0000
n-Hexane	0.8559
2,2,4-Trimethylpentane	0.0000
Total Reduced Sulfur	0.0000
Hydrogen Sulfide	0.0000
Carbon Disulfide	0.0000
Carbonyl Sulfide	0.0000

Calculated Emissions (ton/yr)

Chemical Name	Emissions
HAPs	
Formaldehyde	0.0002
n-Hexane	0.0114
Total	0.0116
Criteria Pollutants	
CO	0.1528
NMHC	0.3094
NMEHC	0.3343
NOx	0.0765

GRI-HAPCalc ® 3.01
External Combustion Devices Report

Facility ID:	**OXFORD**	**Notes:**
Operation Type:	**GAS PLANT**	
Facility Name:	**OXFORD STATION**	
User Name:		
Units of Measure:	**U.S. STANDARD**	

Note: Emissions less than 5.00E-09 tons (or tonnes) per year are considered insignificant and are treated as zero. These emissions are indicated on the report with a "0". Emissions between 5.00E-09 and 5.00E-05 tons (or tonnes) per year are represented on the report with "0.0000".

External Combustion Devices

Unit Name: BLR-1

Hours of Operation:	8,760	Yearly
Heat Input:	1.00	MMBtu/hr
Fuel Type:	NATURAL GAS	
Device Type:	BOILER	
Emission Factor Set:	EPA > FIELD > LITERATURE	
Additional EF Set:	-NONE-	

Calculated Emissions (ton/yr)

Chemical Name	Emissions	Emission Factor	Emission Factor Set
HAPs			
3-Methylcholanthrene	0.0000	0.0000000018 lb/MMBtu	EPA
7,12-Dimethylbenz(a)anthracene	0.0000	0.0000000157 lb/MMBtu	EPA
Formaldehyde	0.0003	0.0000735294 lb/MMBtu	EPA
Methanol	0.0019	0.0004333330 lb/MMBtu	GRI Field
Acetaldehyde	0.0013	0.0002909000 lb/MMBtu	GRI Field
1,3-Butadiene	0.0000	0.0000001830 lb/MMBtu	GRI Field
Benzene	0.0000	0.0000020588 lb/MMBtu	EPA
Toluene	0.0000	0.0000033333 lb/MMBtu	EPA
Ethylbenzene	0.0000	0.0000000720 lb/MMBtu	GRI Field
Xylenes(m,p,o)	0.0000	0.0000010610 lb/MMBtu	GRI Field
2,2,4-Trimethylpentane	0.0001	0.0000323000 lb/MMBtu	GRI Field
n-Hexane	0.0077	0.0017647059 lb/MMBtu	EPA
Phenol	0.0000	0.0000000950 lb/MMBtu	GRI Field
Naphthalene	0.0000	0.0000005980 lb/MMBtu	EPA
2-Methylnaphthalene	0.0000	0.0000000235 lb/MMBtu	EPA
Acenaphthylene	0.0000	0.0000000018 lb/MMBtu	EPA
Biphenyl	0.0000	0.0000011500 lb/MMBtu	GRI Field
Acenaphthene	0.0000	0.0000000018 lb/MMBtu	EPA
Fluorene	0.0000	0.0000000027 lb/MMBtu	EPA
Anthracene	0.0000	0.0000000024 lb/MMBtu	EPA
Phenanthrene	0.0000	0.0000000167 lb/MMBtu	EPA
Fluoranthene	0.0000	0.0000000029 lb/MMBtu	EPA
Pyrene	0.0000	0.0000000049 lb/MMBtu	EPA
Benz(a)anthracene	0.0000	0.0000000018 lb/MMBtu	EPA

Chrysene	0.0000	0.0000000018 lb/MMBtu	EPA
Benzo(a)pyrene	0.0000	0.0000000012 lb/MMBtu	EPA
Benzo(b)fluoranthene	0.0000	0.0000000018 lb/MMBtu	EPA
Benzo(k)fluoranthene	0.0000	0.0000000018 lb/MMBtu	EPA
Benzo(g,h,i)perylene	0.0000	0.0000000012 lb/MMBtu	EPA
Indeno(1,2,3-c,d)pyrene	0.0000	0.0000000018 lb/MMBtu	EPA
Dibenz(a,h)anthracene	0.0000	0.0000000012 lb/MMBtu	EPA
Lead	0.0000	0.0000004902 lb/MMBtu	EPA
Total	0.0113		

Criteria Pollutants

VOC	0.0236	0.0053921569 lb/MMBtu	EPA
PM	0.0326	0.0074509804 lb/MMBtu	EPA
PM, Condensible	0.0245	0.0055882353 lb/MMBtu	EPA
PM, Filterable	0.0082	0.0018627451 lb/MMBtu	EPA
CO	0.3607	0.0823529410 lb/MMBtu	EPA
NMHC	0.0374	0.0085294118 lb/MMBtu	EPA
NOx	0.4294	0.0980392157 lb/MMBtu	EPA
SO2	0.0026	0.0005880000 lb/MMBtu	EPA

Other Pollutants

Dichlorobenzene	0.0000	0.0000011765 lb/MMBtu	EPA
Methane	0.0099	0.0022549020 lb/MMBtu	EPA
Acetylene	0.0234	0.0053314000 lb/MMBtu	GRI Field
Ethylene	0.0023	0.0005264000 lb/MMBtu	GRI Field
Ethane	0.0133	0.0030392157 lb/MMBtu	EPA
Propylene	0.0041	0.0009333330 lb/MMBtu	GRI Field
Propane	0.0069	0.0015686275 lb/MMBtu	EPA
Butane	0.0090	0.0020588235 lb/MMBtu	EPA
Cyclopentane	0.0002	0.0000405000 lb/MMBtu	GRI Field
Pentane	0.0112	0.0025490196 lb/MMBtu	EPA
n-Pentane	0.0088	0.0020000000 lb/MMBtu	GRI Field
Cyclohexane	0.0002	0.0000451000 lb/MMBtu	GRI Field
Methylcyclohexane	0.0007	0.0001691000 lb/MMBtu	GRI Field
n-Octane	0.0002	0.0000506000 lb/MMBtu	GRI Field
n-Nonane	0.0000	0.0000050000 lb/MMBtu	GRI Field
CO2	515.2941	117.6470588235 lb/MMBtu	EPA

Emission Estimates
CONE Midstream Partners LP
Oxford Compressor Station

Sources

1. EG Cummins (1 unit – 324 hp)
   Emissions Basis - Manufacturer's data unless noted otherwise*
   Emissions:

   a. NO_x = 2.5 g/bhp-hr x 324hp x = 810g/hr * 500 hrs =486000 g/yr = 0.446 tpy
   b. CO = 0.7 g/bhp-hr x 324hp x = 226.8g/hr * 500 hrs =113400 g/yr = 0.125 tpy
   c. VOC = 0.168 g/bhp-hr *324hp = 162g/hr* 500 hrs =27240 g/yr = 0.03 tpy **
   d. SO_2 = 0.0005 g/bhp-hr *324hp = 0.181g/hr* 500 hrs =90.8 g/yr = 0.0001 tpy **
   e. PM10 = 0.08 g/bhp-hr *324hp = 25.92g/hr* 500 hrs =12960 g/yr = 0.015 tpy

   **EPA Off Road

OXFORD STATION
CONE Inlet

Tank calculations

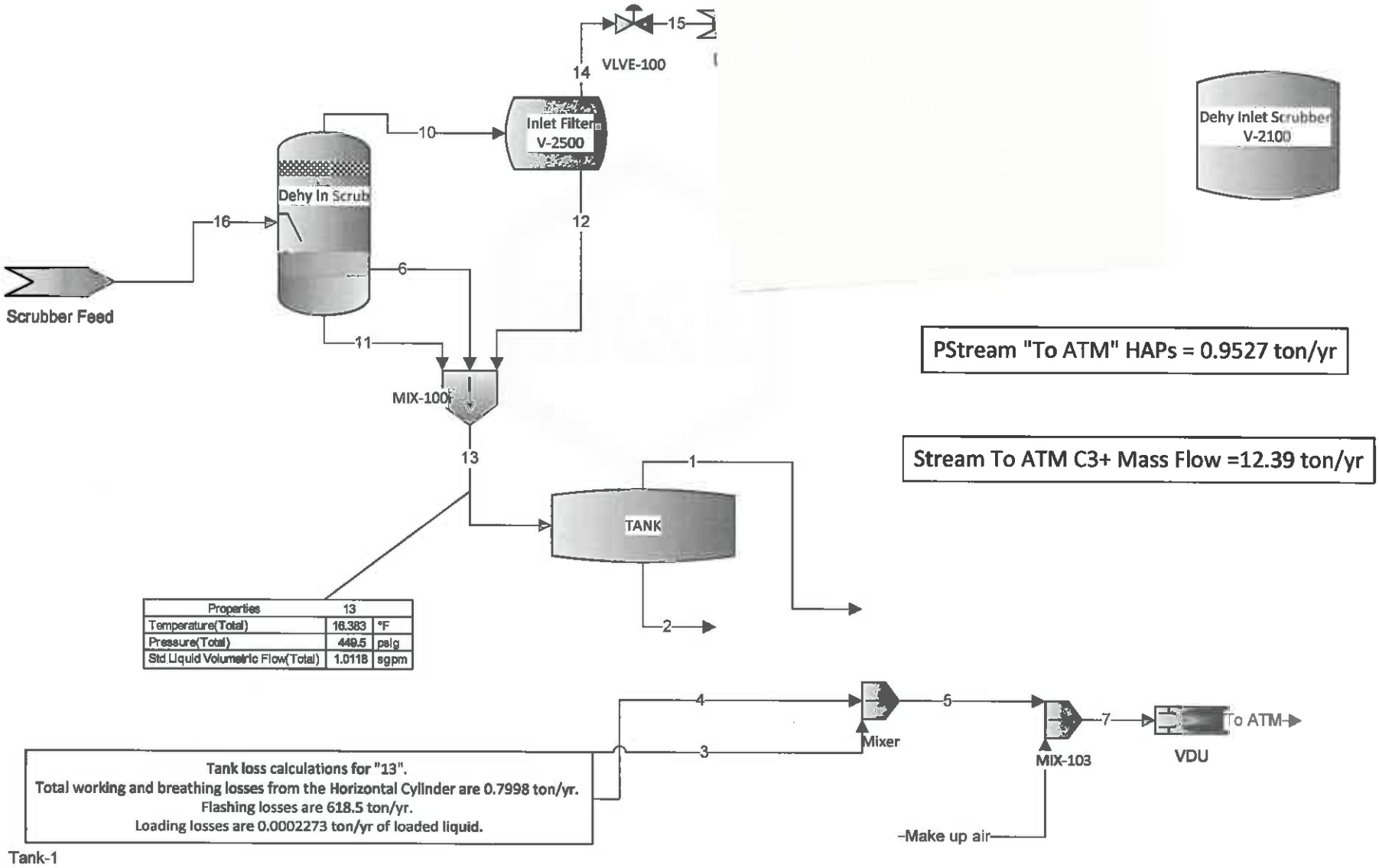

Properties	13	
Temperature(Total)	16.383	°F
Pressure(Total)	449.5	psig
Std Liquid Volumetric Flow(Total)	1.0118	sgpm

Tank loss calculations for "13".
Total working and breathing losses from the Horizontal Cylinder are 0.7998 ton/yr.
Flashing losses are 618.5 ton/yr.
Loading losses are 0.0002273 ton/yr of loaded liquid.

GRI-GLYCalc VERSION 4.0 - SUMMARY OF INPUT VALUES

Case Name: Oxford Station
File Name: C:¥Program Files¥GRI-GLYCalc4¥Oxford.ddf
Date: October 03, 2014

DESCRIPTION:

Description:

Annual Hours of Operation: 8760.0 hours/yr

WET GAS:

Temperature: 100.00 deg. F
Pressure: 450.00 psig
Wet Gas Water Content: Saturated

Component	Conc. (vol %)
Carbon Dioxide	0.1889
Methane	85.3837
Ethane	11.8439
Propane	1.7862
Isobutane	0.1051
n-Butane	0.1394
Isopentane	0.0141
n-Pentane	0.0104
Cyclopentane	0.0021
n-Hexane	0.0087
Other Hexanes	0.0764
Heptanes	0.0999
Methylcyclohexane	0.0000
2,2,4-Trimethylpentane	0.0000
Toluene	0.0006
Xylenes	0.0002
C8+ Heavies	0.0009

DRY GAS:

Flow Rate: 50.0 MMSCF/day
Water Content: 5.0 lbs. H2O/MMSCF

LEAN GLYCOL:

Glycol Type: TEG
Water Content: 1.5 wt% H2O
Recirculation Ratio: 3.0 gal/lb H2O

PUMP:

Glycol Pump Type: Gas Injection
Gas Injection Pump Volume Ratio: 0.080 acfm gas/gpm glycol

FLASH TANK:

Flash Control: Combustion device
Flash Control Efficiency: 98.00 %
Temperature: 130.0 deg. F
Pressure: 35.0 psig

REGENERATOR OVERHEADS CONTROL DEVICE:

Control Device: Combustion Device
Destruction Efficiency: 98.0 %
Excess Oxygen: 150.0 %
Ambient Air Temperature: 70.0 deg. F

GRI-GLYCalc VERSION 4.0 - EMISSIONS SUMMARY

Case Name: Oxford Station
File Name: C:¥Program Files¥GRI-GLYCalc4¥Oxford.ddf
Date: October 03, 2014

CONTROLLED REGENERATOR EMISSIONS

Component	lbs/hr	lbs/day	tons/yr
Methane	0.0169	0.405	0.0740
Ethane	0.0188	0.452	0.0825
Propane	0.0119	0.285	0.0521
Isobutane	0.0016	0.039	0.0071
n-Butane	0.0032	0.078	0.0142
Isopentane	0.0005	0.011	0.0021
n-Pentane	0.0005	0.012	0.0022
Cyclopentane	0.0008	0.018	0.0033
n-Hexane	0.0012	0.029	0.0052
Other Hexanes	0.0068	0.163	0.0298
Heptanes	0.0433	1.040	0.1897
Methylcyclohexane	0.0001	0.001	0.0003
2,2,4-Trimethylpentane	<0.0001	<0.001	<0.0001
Toluene	0.0114	0.274	0.0500
Xylenes	0.0086	0.205	0.0375
C8+ Heavies	0.0068	0.163	0.0298
Total Emissions	0.1324	3.177	0.5798
Total Hydrocarbon Emissions	0.1324	3.177	0.5798
Total VOC Emissions	0.0966	2.320	0.4233
Total HAP Emissions	0.0212	0.508	0.0927
Total BTEX Emissions	0.0200	0.479	0.0875

UNCONTROLLED REGENERATOR EMISSIONS

Component	lbs/hr	lbs/day	tons/yr
Methane	0.8445	20.268	3.6990
Ethane	0.9414	22.593	4.1232
Propane	0.5948	14.274	2.6051
Isobutane	0.0815	1.957	0.3572
n-Butane	0.1624	3.898	0.7113
Isopentane	0.0238	0.571	0.1042
n-Pentane	0.0251	0.602	0.1098
Cyclopentane	0.0375	0.901	0.1644
n-Hexane	0.0594	1.427	0.2604
Other Hexanes	0.3400	8.160	1.4891

Heptanes	2.1661	51.986	9.4874
Methylcyclohexane	0.0029	0.070	0.0129
2,2,4-Trimethylpentane	<0.0001	0.001	0.0001
Toluene	0.5713	13.710	2.5021
Xylenes	0.4276	10.262	1.8728
C8+ Heavies	0.3400	8.160	1.4892
Total Emissions	6.6183	158.839	28.9881
Total Hydrocarbon Emissions	6.6183	158.839	28.9881
Total VOC Emissions	4.8324	115.978	21.1659
Total HAP Emissions	1.0583	25.399	4.6354
Total BTEX Emissions	0.9988	23.972	4.3749

FLASH GAS EMISSIONS

Component	lbs/hr	lbs/day	tons/yr
Methane	1.3215	31.717	5.7883
Ethane	0.4358	10.460	1.9090
Propane	0.1196	2.871	0.5240
Isobutane	0.0110	0.263	0.0481
n-Butane	0.0167	0.401	0.0732
Isopentane	0.0022	0.052	0.0095
n-Pentane	0.0018	0.044	0.0080
Cyclopentane	0.0007	0.018	0.0032
n-Hexane	0.0024	0.058	0.0107
Other Hexanes	0.0185	0.444	0.0810
Heptanes	0.0440	1.057	0.1928
Methylcyclohexane	<0.0001	0.001	0.0001
2,2,4-Trimethylpentane	<0.0001	<0.001	<0.0001
Toluene	0.0005	0.013	0.0023
Xylenes	0.0002	0.004	0.0007
C8+ Heavies	0.0007	0.016	0.0030
Total Emissions	1.9758	47.418	8.6538
Total Hydrocarbon Emissions	1.9758	47.418	8.6538
Total VOC Emissions	0.2184	5.241	0.9566
Total HAP Emissions	0.0031	0.075	0.0136
Total BTEX Emissions	0.0007	0.016	0.0030

FLASH TANK OFF GAS

Component	lbs/hr	lbs/day	tons/yr
Methane	66.0767	1585.841	289.4161

Ethane	21.7917	523.000	95.4475
Propane	5.9816	143.558	26.1994
Isobutane	0.5488	13.172	2.4038
n-Butane	0.8356	20.054	3.6599
Isopentane	0.1088	2.612	0.4766
n-Pentane	0.0916	2.197	0.4010
Cyclopentane	0.0367	0.880	0.1607
n-Hexane	0.1217	2.920	0.5329
Other Hexanes	0.9247	22.192	4.0500
Heptanes	2.2012	52.829	9.6413
Methylcyclohexane	0.0012	0.030	0.0054
2,2,4-Trimethylpentane	0.0001	0.001	0.0002
Toluene	0.0262	0.629	0.1149
Xylenes	0.0078	0.187	0.0341
C8+ Heavies	0.0338	0.812	0.1481
Total Emissions	98.7881	2370.915	432.6920
Total Hydrocarbon Emissions	98.7881	2370.915	432.6920
Total VOC Emissions	10.9197	262.073	47.8284
Total HAP Emissions	0.1557	3.737	0.6821
Total BTEX Emissions	0.0340	0.816	0.1489

COMBINED REGENERATOR VENT/FLASH GAS EMISSIONS

Component	lbs/hr	lbs/day	tons/yr
Methane	1.3384	32.122	5.8623
Ethane	0.4547	10.912	1.9914
Propane	0.1315	3.157	0.5761
Isobutane	0.0126	0.303	0.0552
n-Butane	0.0200	0.479	0.0874
Isopentane	0.0027	0.064	0.0116
n-Pentane	0.0023	0.056	0.0102
Cyclopentane	0.0015	0.036	0.0065
n-Hexane	0.0036	0.087	0.0159
Other Hexanes	0.0253	0.607	0.1108
Heptanes	0.0873	2.096	0.3826
Methylcyclohexane	0.0001	0.002	0.0004
2,2,4-Trimethylpentane	<0.0001	<0.001	<0.0001
Toluene	0.0119	0.287	0.0523
Xylenes	0.0087	0.209	0.0381
C8+ Heavies	0.0075	0.179	0.0327
Total Emissions	2.1081	50.595	9.2336
Total Hydrocarbon Emissions	2.1081	50.595	9.2336
Total VOC Emissions	0.3150	7.561	1.3799

Total HAP Emissions	0.0243	0.583	0.1063
Total BTEX Emissions	0.0207	0.496	0.0905

Draft AIR QUALITY PERMIT NOTICE
Notice of Application

Notice is given that Cone Midstream Partners has applied to the West Virginia Department of Environmental Protection, Division of Air Quality, for a Class II Rule to construct a new natural gas compressor station (the Oxford Compressor Station) located near the Town of West Union, in Doddridge County, West Virginia. The site latitude and longitude coordinates are: 39.242516 N, -80.820745 W.

The station will consist of one (1) triethylene glycol (TEG) dehydration unit rated at 50 million standard cubic feet per day (MMscfd) with an associated reboiler (rated at 1.0 MMBtu/hr) and controlled by an enclosed flare (rated at 6.0 MMbtu/hr), as well as one storage tank.

The applicant estimates the potential increase in the following Regulated Air Pollutants associated with the project after the installation of the proposed equipment:

Pollutant	Potential Emissions (tons per year)
NOx	0.95
CO	0.49
VOC	18.29
SO_2	0.01
PM/PM_{10}	0.006
Formaldehyde	0.003
HAPs	0.110
CO2e	2504.2

Startup of operation is planned to begin as soon as the permit is approved. Written comments will be received by the West Virginia Department of Environmental Protection, Division of Air Quality, 601 57th Street, SE, Charleston, WV 25304, for at least 30 calendar days from the date of publication of this notice.

Any questions regarding this permit application should be directed to the DAQ at (304) 926-0499, extension 1227, during normal business hours.

Dated this the 3nd day October, 2014.

By: CONE Midstream Partners LP.
David Morris
1000 CONSOL Energy Drive
Canonsburg, PA 15317

Power Generation

2014 EPA Tier 3 Exhaust Emission Compliance Statement 100DSGAA Stationary Emergency

60 Hz Diesel Generator Set

Compliance Information:

The engine used in this generator set complies with Tier 3 emissions limit of U.S. EPA New Source Performance Standards for stationary emergency engines under the provisions of 40 CFR 60 Subpart IIII when tested per ISO8178 D2.

Engine Manufacturer:	Cummins Inc
EPA Certificate Number:	ECEXL0409AAD-007
Effective Date:	04/29/2013
Date Issued:	04/29/2013
EPA Engine Family (Cummins Emissions Family):	ECEXL0409AAD (D313)

Engine Information:

Model:	QSB6.7 / QSB7 / QSB7-G5 NR3	Bore:	4.21 in. (107 mm)
Engine Nameplate HP:	324	Stroke:	4.88 in. (124 mm)
Type:	4 Cycle, In-line, 6 Cylinder Diesel	Displacement:	408 cu. in. (6.7 liters)
Aspiration:	Turbocharged and CAC	Compression Ratio:	17.2:1
Emission Control Device:		Exhaust Stack Diameter:	4 in.

Diesel Fuel Emission Limits

D2 Cycle Exhaust Emissions

	Grams per BHP-hr			Grams per kWm-hr		
	NOx + NMHC	CO	PM	NOx + NMHC	CO	PM
Test Results - Diesel Fuel (300-4000 ppm Sulfur)	3.0	0.7	0.08	4.0	1.0	0.11
EPA Emissions Limit	3.0	2.6	0.15	4.0	3.5	0.20
Test Results - CARB Diesel Fuel (<15 ppm Sulfur)	2.7	0.7	0.07	3.7	1.0	0.10
CARB Emissions Limit	3.0	2.6	0.15	4.0	3.5	0.20

The CARB emission values are based on CARB approved calculations for converting EPA (500 ppm) fuel to CARB (15 ppm) fuel.
Test Methods: EPA/CARB Nonroad emissions recorded per 40CFR89 (ref. ISO8178-1) and weighted at load points prescribed in Subpart E, Appendix A for Constant Speed Engines (ref. ISO8178-4, D2)

Diesel Fuel Specifications: Cetane Number: 40-48. Reference: ASTM D975 No. 2-D.
Reference Conditions: Air Inlet Temperature: 25°C (77°F), Fuel Inlet Temperature: 40°C (104°F). Barometric Pressure: 100 kPa (29.53 in Hg), Humidity: 10.7 g/kg (75 grains H2O/lb) of dry air; required for NOx correction, Restrictions: Intake Restriction set to a maximum allowable limit for clean filter; Exhaust Back Pressure set to a maximum allowable limit.

Tests conducted using alternate test methods, instrumentation, fuel or reference conditions can yield different results.
Engine operation with excessive air intake or exhaust restriction beyond published maximum limits, or with improper maintenance, may result in elevated emission levels.

ENVIROTHERM INTERNATIONAL™

Flare Stacks – Thermal Oxidizers – Burners & Controls

PROPOSAL FOR Consol Energy

36" DVC Flare System

Customer: Consol Energy
Attn:

Prepared By: Mike Riddell
(817)924-9991 office
(817)789-0949 cell
(817)924-9533 fax
mriddell@irsvc.com

Date Prepared: April 23, 2014

Proposal Number: Q214xxx Rev 0

ENVIROTHERM INTERNATIONAL

Technical Summary

Design Condition

Process inlet stream:

Overhead Still	
Flow Rate:	4,250 SCFH
BTU Value:	39 BTU/CF
Flash Gas	
Flow Rate:	2,100 SCFH
BTU Value:	1,329 BTU/CF
Total Heat input	2.96 MMBTU/HR
System Load Max	6.0 MMBTU/hr
Chamber Exit I.D.	28" I.D.
Chamber Max Temp	1800 °F
Combustion Chamber Temp:	1400 -1600 °F
Residence Time:	≥ 0.88 Sec.
Exit Velocity:	22.78 FT/sec.
Destruction Efficiency:	≥ 98%
Turn Down	10 : 1

Site Conditions:

Wind Speed	90 MPH
Seismic Zone	1
Elevation	1000 ft.
Humidity	High

Utilities:

Gas Service Required for Pilot	100 SCFH – Natural Gas @ 20 PSIG Min. / 150 PSIG Max
Gas Service Required for Assist Fuel	2000 SCFH – Natural Gas @ 20 PSIG Min. (Intermittent Usage)
Electrical Service Required	120 VAC, 60Hz, 1Ph or 24 VDC
Compressed Gas for Valves	80 PSIG – Intermittent

west virginia department of environmental protection

Division of Air Quality
601 57th Street SE
Charleston, WV 25304
Phone 304/926-0475

Earl Ray Tomblin, Governor
Randy C. Huffman, Cabinet Secretary
www.dep.wv.gov

September 16, 2014

CERTIFIED MAIL
91 7199 9991 7034 3260 5293

91 7199 9991 7034 3260 5293

Joe Fink
CONE Gathering, LLC
1000 CONSOL Energy Drive
Canonsburg, PA 15317

RE: **Application Status: Incomplete**
CONE Gathering, LLC
Oxford Station
Permit Application R13-3208
Plant ID No. 017-00102

Dear Mr. Fink:

Your application for a construction permit for a natural gas dehydration facility was received by this Division on September 5, 2014 and assigned to the writer for review. Upon initial review of said application, it has been determined that the application as submitted is incomplete based on the following items:

1. Please submit the affidavit of publication for the Class I legal advertisement notice of application.

2. **Attachment L (Emission Unit Data Sheet (EUDS)).** Please submit EUDS for all equipment listed on the Emission Units Table (Attachment I). There were no EUDS for Tank-1, SV-1, BLR-1 and EG-1.

3. **Attachment M (Air Pollution Control Device (APCD) Sheet).** Please submit APCD sheets for VDU-1 and GF-1.

4. **Attachment N (Emissions Calculations).** The emission factors included with BLR-1 do not match AP-42 EPA emission factors as indicated. Additionally, there were no emissions calculations performed for Tank1, VDU-1, EG-1, FLR-1, BL-1 and FG. Please address this issue.

NON-CONFIDENTIAL

5. **Source Aggregation.** Please submit a source aggregation analysis. Based on previously submitted permit applications, CONE Gathering's Oxford Station is located on contiguous or adjacent property with Noble's OXFD1 production facility. CONE is involved in a joint venture with the Noble facility. Therefore, based on the information that has been received, these facilities share the same two (2) digit SIC code, are under common control, and are located on contiguous or adjacent properties. If this is true, the emissions from these facilities should be aggregated as a 'single source' for Title V and PSD permitting purposes. If you have further information that would strengthen your argument as to why these facilities should not be aggregated, please let me know.

Please resubmit any other forms that may be affected as a result of the incomplete items listed above.

Please address the above deficiencies in writing within fifteen (15) days of the receipt of this letter. Application review will not commence until the application has been deemed to be technically complete. Failure to respond to this request in a timely manner may result in the denial of the application. Should you have any questions, please contact me at (304) 926-0499 ext. 1223.

Sincerely,

Jerry Williams, P.E.
Engineer

c: David Morris

Williams, Jerry

From: Adkins, Sandra K
Sent: Thursday, September 11, 2014 1:22 PM
To: Williams, Jerry
Subject: CONE Gathering LLC (Oxford)/Permit Application Fee

This is the receipt for payment received from:

CONE Gathering LLC, check number 2790010435, dated September 3, 2014, $4,000.00
Oxford Station R13-3208 id no 017-00102

OASIS Deposit No. 1500029225 September 11, 2014

NON-CONFIDENTIAL

Williams, Jerry

From:	Rice, Jennifer L
Sent:	Thursday, September 11, 2014 10:14 AM
To:	joefink@consolenergy.com; davidmorris@consolenergy.com
Cc:	Williams, Jerry; McKeone, Beverly D
Subject:	WV DAQ Permit Application Status for Cone Gathering LLC; Oxford Station

RE: Application Status
Cone Gathering LLC
Oxford Station
Plant ID No. 017-00102
Application No. R13-3208

Mr. Fink,

Your application for a construction permit for the Oxford Station was received by this Division on September 5, 2014, and was assigned to Jerry Williams. The following item(s) were not included in the initial application submittal:

Original affidavit for Class I legal advertisement not submitted.

This item is necessary for the assigned permit writer to continue the 30-day completeness review.

Within 30 days, you should receive a letter from Jerry Williams stating the status of the permit application and, if complete, given an estimated time frame for the agency's final action on the permit.

Any determination of completeness shall not relieve the permit applicant of the requirement to subsequently submit, in a timely manner, any additional or corrected information deemed necessary for a final permit decision.

Should you have any questions, please contact the assigned engineer, Jerry Williams, at 304-926-0499, extension 1223.

NON-CONFIDENTIAL

Jennifer Rice
WV Dept. of Environmental Protection
Division of Air Quality
304-926-0499 x1227
Jennifer.L.Rice@wv.gov

R13 #3208
017-0002
Jerry
Construction

45CSR13 Administrative Update, Construction, Modification, Relocation, Temporary Permit or General Permit Registration Incomplete Application

A complete application is demonstrated when all of the information required below is properly prepared, completed and attached. The items listed below are required information which must be submitted with a 45CSR13 permit application. Any submittal will be considered incomplete if the required information is not included. The applicant must submit a complete application in order to receive a 45CSR13 permit.

- ☒ Class I legal advertisement not published in a newspaper certified to accept legal advertisements and original affidavit submitted.
- ☐ Application fee AND/OR additional application fees not included:
  - ☐ $250 Class I General Permit
  - ☐ $300 Class II Administrative Update
  - ☐ $1,000 Construction, Modification, Relocation or Temporary Permit
  - ☐ $500 Class II General Permit
  - ☐ $1,000 NSPS
  - ☐ $2,500 NESHAP
  - ☐ $2,500 45CSR27 Pollutant
  - ☐ $5,000 Major Modification
  - ☐ $10,000 Major Construction
- ☐ Original and two (2) copies of the application not submitted.
- ☐ File organization – application pages are not numbered or in correct order, application is not bound in some way, etc.
- ☐ Confidential Business Information is not properly identified.
- ☐ General application forms not completed and signed by a responsible official.
- ☐ Authority of Corporation form not included – required if application is signed by someone other than a responsible official.
- ☐ Applicant is not registered with the West Virginia Secretary of State's Office.
- ☐ Copy of current Business Registration Certificate not included.
- ☐ Process description, including equipment and emission point identification numbers, not submitted.
- ☐ Process flow diagram, including equipment and emission point identification numbers, not submitted.
- ☐ Plot plan, including equipment and emission point identification numbers, not submitted.
- ☐ Applicable technical forms not completed and submitted:
  - ☐ Emission Point Data Summary Sheets
  - ☐ Emission Unit Data Sheets
  - ☐ Air Pollution Control Device Sheets
  - ☐ Equipment List Form
- ☐ Emission calculations not included – emission factors, references, source identification numbers, etc.
- ☐ Electronic submittal diskette not included.

CONSOL ENERGY

CONSOL Energy Inc.
CNX Center
1000 Consol Energy Drive
Canonsburg, PA 15321-6506

September 3, 2014

Air Quality Permitting Manager
West Virginia Department of Environmental Protection
Bureau of Air Quality
601 57th Street
Charleston, WV 25304

Re: CONE Gathering LLC Rule 13 Permit Applications
Oxford Station
Shirley Station

Sir or Madam:

Enclosed please find three copies of CONE Gathering LLC's Applications for two R13 permits. The First is for a Natural Gas dehydrator Station located in Doddridge county WV, referred to as Oxford Station. The Second is for our Shirley Station located in Tyler County.

As both applications were previously submitted to the department as General permit applications and withdrawn. CONE requests that the same permit reviewer, Mr. David Keatley, be assigned to review these applications as he is already familiar with the station details.

If you have any questions regard this matter feel free to contact me at 724-485-3063 or at DavidMorris@consolenergy.com.

Sincerely,

David Morris
Air Quality Manager
CONSOL Energy

ID # 17-102
Reg R13-3208
Company CONE
Facility OXFORD Initials

cc: Katharine Fredriksen, Sr. VP Environmental Strategy and Reg. Affairs
Frank Calderon, General Manager Environmental Com. and Reg. Affairs

NON-CONFIDENTIAL

Oxford R13 Table of Contents

WEST VIRGINIA DEPARTMENT OF ENVIRONMENTAL PROTECTION

DIVISION OF AIR QUALITY

601 57th Street, SE
Charleston, WV 25304
(304) 926-0475
www.dep.wv.gov/daq

APPLICATION FOR NSR PERMIT AND TITLE V PERMIT REVISION (OPTIONAL)

PLEASE CHECK ALL THAT APPLY TO **NSR (45CSR13)** (IF KNOWN):

☒ **CONSTRUCTION** ☐ **MODIFICATION** ☐ **RELOCATION**
☐ **CLASS I ADMINISTRATIVE UPDATE** ☐ **TEMPORARY**
☐ **CLASS II ADMINISTRATIVE UPDATE** ☐ **AFTER-THE-FACT**

PLEASE CHECK TYPE OF **45CSR30 (TITLE V)** REVISION (IF ANY):

☐ **ADMINISTRATIVE AMENDMENT** ☐ **MINOR MODIFICATION**
☐ **SIGNIFICANT MODIFICATION**

IF ANY BOX ABOVE IS CHECKED, INCLUDE TITLE V REVISION INFORMATION AS **ATTACHMENT S** TO THIS APPLICATION

FOR TITLE V FACILITIES ONLY: Please refer to "Title V Revision Guidance" in order to determine your Title V Revision options (Appendix A, "Title V Permit Revision Flowchart") and ability to operate with the changes requested in this Permit Application.

Section I. General

1. Name of applicant *(as registered with the WV Secretary of State's Office):*
CONE Gathering LLC.

2. Federal Employer ID No. ***(FEIN):***
45-3344658

3. Name of facility *(if different from above):*
Oxford Station

4. The applicant is the:
☐ **OWNER** ☐ **OPERATOR** ☒ **BOTH**

5A. Applicant's mailing address:
1000 CONSOL Energy Drive
Canonsburg, PA 15317

5B. Facility's present physical address:
2123 Elliot Road
West Union, WV 26456

6. **West Virginia Business Registration.** Is the applicant a resident of the State of West Virginia? ☐ **YES** ☒ **NO**
- If **YES,** provide a copy of the **Certificate of Incorporation/Organization/Limited Partnership** (one page) including any name change amendments or other Business Registration Certificate as **Attachment A.**
- If **NO,** provide a copy of the **Certificate of Authority/Authority of L.L.C./Registration** (one page) including any name change amendments or other Business Certificate as **Attachment A.**

7. If applicant is a subsidiary corporation, please provide the name of parent corporation: CONSOL Energy

8. Does the applicant own, lease, have an option to buy or otherwise have control of the *proposed site?* ☒ **YES** ☐ **NO**
If **YES,** please explain: CONE Gathering Purchased the property in 2014.

- If **NO,** you are not eligible for a permit for this source.

9. Type of plant or facility (stationary source) to be **constructed, modified, relocated, administratively updated or temporarily permitted** (e.g., coal preparation plant, primary crusher, etc.): Natural Gas Dehydration facility

10. North American Industry Classification System **(NAICS)** code for the facility:
213112

11A. DAQ Plant ID No. (for existing facilities only):
–

11B. List all current 45CSR13 and 45CSR30 (Title V) permit numbers associated with this process (for existing facilities only):

All of the required forms and additional information can be found under the Permitting Section of DAQ's website, or requested by phone.

12A.

- For **Modifications, Administrative Updates** or **Temporary permits** at an existing facility, please provide directions to the *present location* of the facility from the nearest state road;
- For **Construction** or **Relocation permits,** please provide directions to the *proposed new site location* from the nearest state road. Include a **MAP** as **Attachment B.**

Take rt 50 west (~25miles) and make a left at the sunnyside exit. Continue on sunnyside for a mile and make a left on oxford road. Continue out oxford rd for ~3 miles and make a left onto Elliot road. The dehy is 2 miles on Elliot

12.B. New site address (if applicable):	12C. Nearest city or town: West Union	12D. County: Doddridge
12.E. UTM Northing (KM): 4343.7048 km N	12F. UTM Easting (KM):515.4689 km E	12G. UTM Zone: REV1 NAD83 zone 17N

13. Briefly describe the proposed change(s) at the facility:
Installation of Dehydrator and associated equipment

14A. Provide the date of anticipated installation or change: – If this is an **After-The-Fact** permit application, provide the date upon which the proposed change did happen: / /	14B. Date of anticipated Start-Up if a permit is granted: As soon as Permitted

14C. Provide a **Schedule** of the planned **Installation** of/**Change** to and **Start-Up** of each of the units proposed in this permit application as **Attachment C** (if more than one unit is involved).

15. Provide maximum projected **Operating Schedule** of activity/activities outlined in this application:
Hours Per Day 24 Days Per Week 7 Weeks Per Year 52

16. Is demolition or physical renovation at an existing facility involved? ☐ **YES** ☒ **NO**

17. **Risk Management Plans.** If this facility is subject to 112(r) of the 1990 CAAA, or will become subject due to proposed changes (for applicability help see www.epa.gov/ceppo), submit your **Risk Management Plan (RMP)** to U. S. EPA Region III.

18. **Regulatory Discussion.** List all Federal and State air pollution control regulations that you believe are applicable to the proposed process *(if known)*. A list of possible applicable requirements is also included in Attachment S of this application (Title V Permit Revision Information). Discuss applicability and proposed demonstration(s) of compliance *(if known)*. Provide this information as **Attachment D.**

Section II. Additional attachments and supporting documents.

19. Include a check payable to WVDEP – Division of Air Quality with the appropriate **application fee** (per 45CSR22 and 45CSR13).

20. Include a **Table of Contents** as the first page of your application package.

21. Provide a **Plot Plan,** e.g. scaled map(s) and/or sketch(es) showing the location of the property on which the stationary source(s) is or is to be located as **Attachment E** (Refer to ***Plot Plan Guidance***) .
– Indicate the location of the nearest occupied structure (e.g. church, school, business, residence).

22. Provide a **Detailed Process Flow Diagram(s)** showing each proposed or modified emissions unit, emission point and control device as **Attachment F.**

23. Provide a **Process Description** as **Attachment G.**
– Also describe and quantify to the extent possible all changes made to the facility since the last permit review (if applicable).

All of the required forms and additional information can be found under the Permitting Section of DAQ's website, or requested by phone.

24. Provide **Material Safety Data Sheets (MSDS)** for all materials processed, used or produced as **Attachment H.**
– For chemical processes, provide a MSDS for each compound emitted to the air.

25. Fill out the **Emission Units Table** and provide it as **Attachment I.**

26. Fill out the **Emission Points Data Summary Sheet (Table 1 and Table 2)** and provide it as **Attachment J.**

27. Fill out the **Fugitive Emissions Data Summary Sheet** and provide it as **Attachment K.**

28. Check all applicable **Emissions Unit Data Sheets** listed below:

☐ Bulk Liquid Transfer Operations
☐ Chemical Processes
☐ Concrete Batch Plant
☐ Grey Iron and Steel Foundry
☒ General Emission Units: Gas dehydrator
☐ Haul Road Emissions
☐ Hot Mix Asphalt Plant
☐ Incinerator
☐ Indirect Heat Exchanger
☐ Quarry
☐ Solid Materials Sizing, Handling and Storage Facilities
☒ Storage Tanks

Fill out and provide the **Emissions Unit Data Sheet(s)** as **Attachment L.**

29. Check all applicable **Air Pollution Control Device Sheets** listed below:

☐ Absorption Systems
☐ Adsorption Systems
☐ Afterburner
☐ Baghouse
☐ Condenser
☐ Electrostatic Precipitator
☐ Flare
☐ Mechanical Collector
☐ Wet Collecting System
☐ Other Collectors, specify

Fill out and provide the **Air Pollution Control Device Sheet(s)** as **Attachment M.**

30. Provide all **Supporting Emissions Calculations** as **Attachment N,** or attach the calculations directly to the forms listed in Items 28 through 31.

31. **Monitoring, Recordkeeping, Reporting and Testing Plans.** Attach proposed monitoring, recordkeeping, reporting and testing plans in order to demonstrate compliance with the proposed emissions limits and operating parameters in this permit application. Provide this information as **Attachment O.**

➢ Please be aware that all permits must be practically enforceable whether or not the applicant chooses to propose such measures. Additionally, the DAQ may not be able to accept all measures proposed by the applicant. If none of these plans are proposed by the applicant, DAQ will develop such plans and include them in the permit.

32. **Public Notice.** At the time that the application is submitted, place a **Class I Legal Advertisement** in a newspaper of general circulation in the area where the source is or will be located (See 45CSR§13-8.3 through 45CSR§13-8.5 and ***Example Legal Advertisement*** for details). Please submit the **Affidavit of Publication** as **Attachment P** immediately upon receipt.

33. **Business Confidentiality Claims.** Does this application include confidential information (per 45CSR31)?

☐ **YES** ☒ **NO**

➢ If **YES,** identify each segment of information on each page that is submitted as confidential and provide justification for each segment claimed confidential, including the criteria under 45CSR§31-4.1, and in accordance with the DAQ's ***"Precautionary Notice – Claims of Confidentiality"*** guidance found in the ***General Instructions*** as **Attachment Q.**

Section III. Certification of Information

34. **Authority/Delegation of Authority.** Only required when someone other than the responsible official signs the application. Check applicable **Authority Form** below:

☐ Authority of Corporation or Other Business Entity
☐ Authority of Governmental Agency
☐ Authority of Partnership
☐ Authority of Limited Partnership

Submit completed and signed **Authority Form** as **Attachment R.**

All of the required forms and additional information can be found under the Permitting Section of DAQ's website, or requested by phone.

35A. **Certification of Information.** To certify this permit application, a Responsible Official (per 45CSR§13-2.22 and 45CSR§30-2.28) or Authorized Representative shall check the appropriate box and sign below.

Certification of Truth, Accuracy, and Completeness

I, the undersigned ☒ **Responsible Official** / ☐ **Authorized Representative,** hereby certify that all information contained in this application and any supporting documents appended hereto, is true, accurate, and complete based on information and belief after reasonable inquiry I further agree to assume responsibility for the construction, modification and/or relocation and operation of the stationary source described herein in accordance with this application and any amendments thereto, as well as the Department of Environmental Protection, Division of Air Quality permit issued in accordance with this application, along with all applicable rules and regulations of the West Virginia Division of Air Quality and W.Va. Code § 22-5-1 et seq. (State Air Pollution Control Act). If the business or agency changes its Responsible Official or Authorized Representative, the Director of the Division of Air Quality will be notified in writing within 30 days of the official change.

Compliance Certification

Except for requirements identified in the Title V Application for which compliance is not achieved, I, the undersigned hereby certify that, based on information and belief formed after reasonable inquiry, all air contaminant sources identified in this application are in compliance with all applicable requirements.

SIGNATURE _____ *(Please use blue ink)* DATE: 9/3/14 *(Please use blue ink)*

35B. Printed name of signee: Joseph Fink		35C. Title: President, CONE Gathering LLC
35D. E-mail: JoeFink@consolenergy.com	36E. Phone: 724-485-3254	36F. FAX:
36A. Printed name of contact person (if different from above): David Morris		36B. Title: Air Quality Manager
36C. E-mail: DavidMorris@consolenergy.com	36D. Phone: 724-485-3063	36E. FAX:

PLEASE CHECK ALL APPLICABLE ATTACHMENTS INCLUDED WITH THIS PERMIT APPLICATION:

- ☒ **Attachment A: Business Certificate**
- ☐ **Attachment B: Map(s)**
- ☐ **Attachment C: Installation and Start Up Schedule**
- ☒ **Attachment D: Regulatory Discussion**
- ☒ **Attachment E: Plot Plan**
- ☒ **Attachment F: Detailed Process Flow Diagram(s)**
- ☐ **Attachment G: Process Description**
- ☐ **Attachment H: Material Safety Data Sheets (MSDS)**
- ☒ **Attachment I: Emission Units Table**
- ☒ **Attachment J: Emission Points Data Summary Sheet**
- ☒ **Attachment K: Fugitive Emissions Data Summary Sheet**
- ☐ **Attachment L: Emissions Unit Data Sheet(s)**
- ☒ **Attachment M: Air Pollution Control Device Sheet(s)**
- ☒ **Attachment N: Supporting Emissions Calculations**
- ☐ **Attachment O: Monitoring/Recordkeeping/Reporting/Testing Plans**
- ☒ **Attachment P: Public Notice**
- ☐ **Attachment Q: Business Confidential Claims**
- ☐ **Attachment R: Authority Forms**
- ☐ **Attachment S: Title V Permit Revision Information**
- ☒ **Application Fee**

Please mail an original and three (3) copies of the complete permit application with the signature(s) to the DAQ, Permitting Section, at the address listed on the first page of this application. Please DO NOT fax permit applications.

FOR AGENCY USE ONLY – IF THIS IS A TITLE V SOURCE:

- ☐ ***Forward 1 copy of the application to the Title V Permitting Group and:***
- ☐ ***For Title V Administrative Amendments:***
  - ☐ ***NSR permit writer should notify Title V permit writer of draft permit,***
- ☐ ***For Title V Minor Modifications:***
  - ☐ ***Title V permit writer should send appropriate notification to EPA and affected states within 5 days of receipt,***
  - ☐ ***NSR permit writer should notify Title V permit writer of draft permit.***
- ☐ ***For Title V Significant Modifications processed in parallel with NSR Permit revision:***
  - ☐ ***NSR permit writer should notify a Title V permit writer of draft permit,***
  - ☐ ***Public notice should reference both 45CSR13 and Title V permits,***
  - ☐ ***EPA has 45 day review period of a draft permit.***

All of the required forms and additional information can be found under the Permitting Section of DAQ's website, or requested by phone.

State of West Virginia

Certificate

I, Natalie E. Tennant, Secretary of State of the State of West Virginia, hereby certify that

CONE GATHERING LLC

was duly authorized under the laws of this state to transact business in West Virginia as a foreign limited liability company on September 23, 2011.

The company is filed as an at-will company, for an indefinite period.

I further certify that the LLC (PLLC) has not been revoked by the State of West Virginia nor has a Certificate of Cancellation been issued.

Therefore, I hereby issue this

CERTIFICATE OF AUTHORIZATION

Validation ID:8WV1H_5P568

Given under my hand and the Great Seal of the State of West Virginia on this day of April 09, 2014

Natalie E Tennant

Secretary of State

Google earth

feet 200

meters 90

Attachment F: Map of Facility Location

Oxford

Attachment D: Regulatory Analysis

1.1.1. NSPS Subparts K, Ka, and Kb

These subparts apply to storage tanks of certain sizes constructed, reconstructed, or modified during various time periods. Subpart K applies to storage tanks constructed, reconstructed, or modified prior to 1978, and Subpart Ka applies to those constructed, reconstructed, or modified prior to 1984. Both Subparts K and Ka apply to storage tanks with a capacity greater than 40,000 gallons. Subpart Kb applies to volatile organic liquid (VOL) storage tanks constructed, reconstructed, or modified after July 23, 1984 with a capacity equal to or greater than 75 m^3 (~19,813 gallons). All of the three tanks at the Oxford Station have a capacity of 19,000 gallons or less. As such, Subparts K, Ka, and Kb do not apply to the storage tanks at the Oxford Station.

1.1.2. NSPS Subpart KKK - Equipment Leaks of VOC From Onshore Natural Gas Processing Plants

This subpart applies to affected facilities constructed, reconstructed, or modified after January 20, 1984, and on or before August 23, 2011. A natural gas processing plant is defined as any processing site engaged in the extraction of natural gas liquids from field gas, fractionation of mixed natural gas liquids to natural gas products, or both. Although this subpart includes requirements for storage tanks, it only applies to those units located at a processing plant. The operations at the Oxford Station will not meet the definition of a processing plant and will be constructed after 2011. Therefore, the requirements of this subpart do not apply to the emission units at the Oxford Station.

1.1.3. NSPS Subpart IIII - Stationary Compression Ignition Internal Combustion Engines

This subpart applies to manufacturers, owners, and operators of stationary compression ignition (CI) internal combustion engines. The Oxford Station will not have any internal combustion engines, and therefore the requirements of this subpart do not apply.

1.1.4. NSPS Subpart JJJJ - Stationary Spark Ignition Internal Combustion Engines

NSPS Subpart JJJJ affects owners and operators of stationary spark ignition internal combustion engines (SI ICE) that commence construction, reconstruction or modification after June 12, 2006. Applicability dates are based on the manufacture date for new engines. The applicability dates for new engines range from July 1, 2007 to January 1, 2009, depending upon the engine horsepower (hp) and application. The Oxford Station will not have any internal combustion engines, and therefore the requirements of this subpart do not apply.

1.1.5. NSPS Subpart OOOO—Crude Oil and Natural Gas Production, Transmission, and Distribution

On August 16, 2012, 40 CFR Part 60, Subpart OOOO (NSPS OOOO) was published as a final rule in the Federal Register. This rule applies to affected facilities that commenced construction, reconstruction or modification after August 23, 2011. The list of affected facilities for the natural gas segments under NSPS OOOO includes:

- Gas wells
- Centrifugal compressors
- Reciprocating compressors
- Pneumatic controllers

- Storage vessels
- Equipment (as defined in §60.5430) located at onshore natural gas processing plants
- Sweetening units located onshore that process natural gas produced from either onshore or offshore wells

The Oxford Compressor Station does not include gas wells, sweetening units, natural gas processing plants, or centrifugal compressors, therefore, the only potentially applicable requirements are those for reciprocating compressors, storage vessels, and pneumatic controllers. Rule applicability for each of these affected categories is discussed below.

Storage Vessels - NSPS OOOO standards applicable to storage vessels are detailed in 40 CFR §60.5395. The rule requires that storage vessels with VOC emissions equal to or greater than 6 tpy must reduce VOC emissions by 95.0% or greater. The proposed tanks at the Oxford Compressor Station will have potential VOC emissions below 6 tpy. Therefore, the storage tanks are not affected facilities under NSPS OOOO.

Pneumatic Controllers – The pneumatic controller provisions of NSPS OOOO apply in the natural gas production segment (between the wellhead and the point of custody transfer to the natural gas transmission and storage segment and not including natural gas processing plants). As defined in 40 CFR §60.5365(d)(2), the NSPS OOOO affected facility is each single continuous bleed natural gas-driven pneumatic controller operating at a natural gas bleed rate greater than 6 scfh which commences construction, modification or reconstruction (i.e., ordered) after August 23, 2011. The Oxford Compressor Station will include air-driven pneumatic devices. Therefore, the pneumatic devices are not subject to NSPS OOOO.

1.1.6. Non-Applicability of All Other NSPS

NSPS are developed for particular industrial source categories. Other than NSPS developed for natural gas processing plants (Subparts KKK, and OOOO), internal combustion engines (Subparts IIII and JJJJ), and associated equipment (Subparts K-Kb), the applicability of a particular NSPS to the Oxford Compressor Station can be readily ascertained based on the industrial source category covered. All other NSPS are categorically not applicable to natural gas compressor stations.

1.2. NATIONAL EMISSION STANDARDS FOR HAZARDOUS AIR POLLUTANTS (NESHAP)

Part 63 NESHAP allowable emission limits are established on the basis of a maximum achievable control technology (MACT) determination for a particular major source. A HAP major source is defined as having potential emissions in excess of 25 tpy for total HAP and/or potential emissions in excess of 10 tpy for any individual HAP. The Oxford Compressor Station will be an Area (minor) source of HAP since its potential emissions of HAP are less than the 10/25 major source thresholds.

Besides 40 CFR 63 Subpart A (NESHAP Subpart A), the following NESHAP could potentially apply to the Oxford Compressor Station:

- 40 CFR Part 63 HH – Oil and Natural Gas Production Facilities
- 40 CFT Part 63 HHH – Natural Gas Transmission and Storage Facilities
- 40 CFR Part 63 Subpart ZZZZ- Stationary Reciprocating Internal Combustion Engines (RICE)
- 40 CFR Part 63 Subpart JJJJJJ – Industrial, Commercial, and Institutional Boilers

The applicability of these NESHAP is discussed in the following sections.

1.2.1. 40 CFR 63 Subpart HH - Oil and Natural Gas Production Facilities

This subpart applies to affected emission points that are located at facilities that are major and area sources of HAP and either process, upgrade, or store hydrocarbon liquids prior to custody transfer or that process, upgrade, or store natural gas prior to entering the natural gas transmission and storage source category. For purposes of this subpart, natural gas enters the natural gas transmission and storage source category after the natural gas processing plant, if present.

The proposed Oxford station will be an area source of HAP emissions. The station will processes natural gas in its glycol dehydrator prior to the point of custody transfer; therefore, the provisions of NESHAP Subpart HH apply to the Oxford Station. The benzene emissions from the glycol dehydrator vents are less than 0.90 megagrams per year (1 tpy). Therefore, the Oxford Station is exempt from the requirements of NESHAP Subpart HH pursuant to 40 CFR §63.764(e)(1)(ii), except for the requirement to keep records of the actual average natural gas flow rate or actual average benzene emissions from the dehydrator, per 40 CFR §63.774(d)(1).

1.2.2. 40 CFR 63 Subpart HHH - Natural Gas Transmission and Storage Facilities

This standard applies to such units at natural gas transmission and storage facilities that are major sources of HAP emissions located downstream of the point of custody transfer (after processing and/or treatment in the production sector), but upstream of the distribution sector. The Oxford Station is not a transmission facility; therefore, the provisions of NESHAP Subpart HHH do not apply to the Oxford Station.

1.2.3. 40 CFR 63 Subpart ZZZZ - Stationary Reciprocating Internal Combustion Engines

The original rule, published on February 26, 2004, initially affected new (constructed or reconstructed after December 19, 2002) reciprocating internal combustion engines (RICE) with a site-rating greater than 500 brake horsepower located at a major source of HAP emissions. The rule has since been expanded to cover existing and new units and area and major sources of HAP.

40 CFR §63.6590(c) states that an affected source located at an area HAP source that is subject to regulations under 40 CFR Part 60, Subpart JJJJ must meet the requirements of Subpart ZZZZ by meeting the requirements of Subpart JJJJ. No further requirements apply for such engines under this part. The Oxford Compressor Station is a minor (area) source of hazardous air pollutants and the proposed engines are considered a new stationary RICE. Therefore, the requirements contained in §63.6590(c) are applicable. Cone will be in compliance with applicable requirements of 40 CFR 63 Subpart ZZZZ by meeting the applicable requirements of 40 CFR 60 Subpart JJJJ.

1.2.4. 40 CFR 63 Subpart JJJJJJ - Industrial, Commercial, and Institutional Boilers (Area Source Boiler MACT)

This MACT standard applies to industrial, commercial, and institutional boilers of various sizes and fuel types. The rule exempts natural gas combustion units at area sources. Therefore, the proposed reboiler is not subject to this rule.

CONE GATHERING

MARCELLUS SHALE DEVELOPMENT
OXFORD 1
DEHY

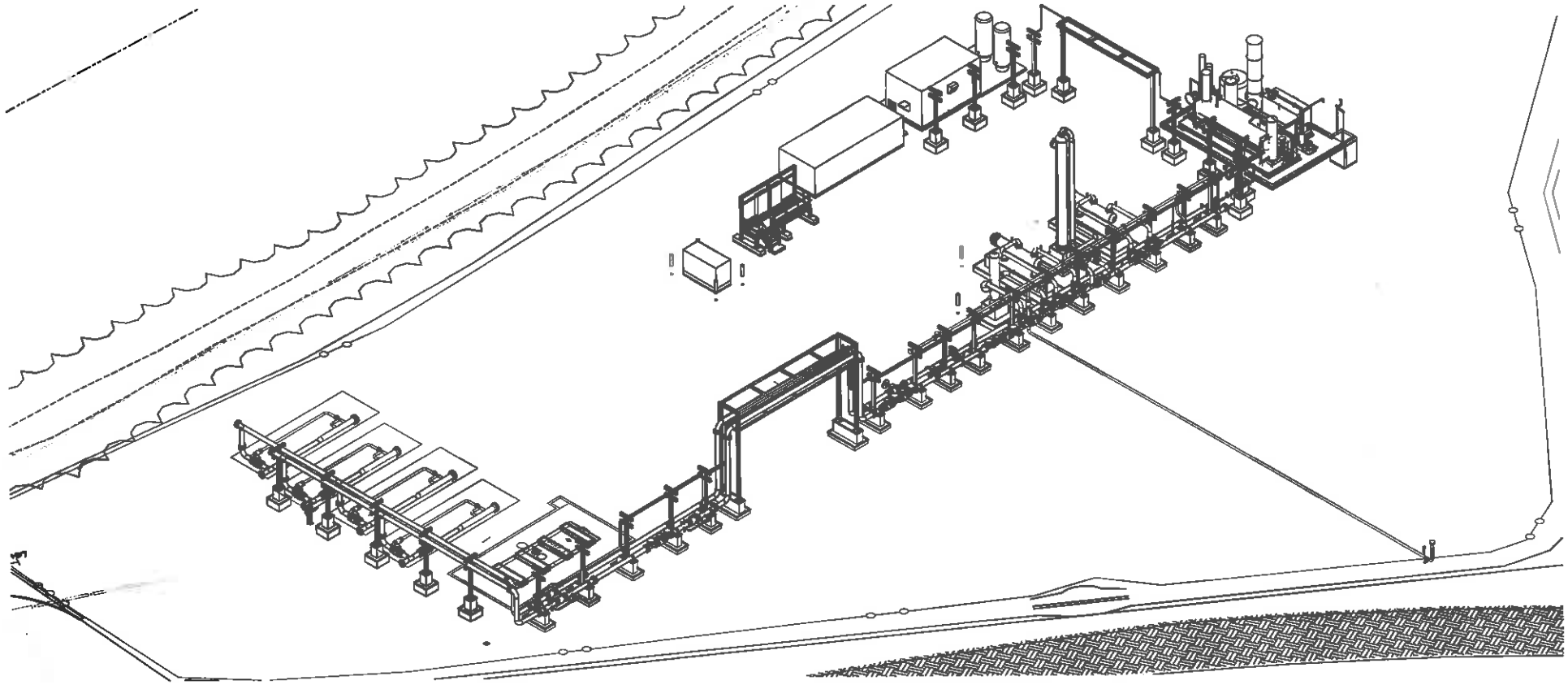

ISSUE	DATE	DRAWN	DESIGNED	CHECKED	APPROVED	ISSUE	DATE	DRAWN	DESIGNED	CHECKED	APPROVED	ISSUE	DATE	DRAWN	DESIGNED	CHECKED	APPROVED
0	ISSUED FOR CONSTRUCTION 3/11/14																

AFE:

CONSOL ENERGY
CNX GAS COMPANY LLC
200 Evergreene Drive
Waynesburg, PA 15370

CNX GAS MIDSTREAM MECHANICAL DEPARTMENT
OXFORD 1 DEHY
OVER ALL PLAN
DETAILS

SCALE: NONE
DRAWN BY: SMP
DWG TYPE: OVER ALL PLAN
CNX-OX1-05-9000
REV: 0

Oxford Pad
Noble Energy

Properties	EQT 510821 (47-017-05643)	
Std Vapor Volumetric Flow (Total)	50*	MMSCFD
Pressure(Total)	2500*	psig

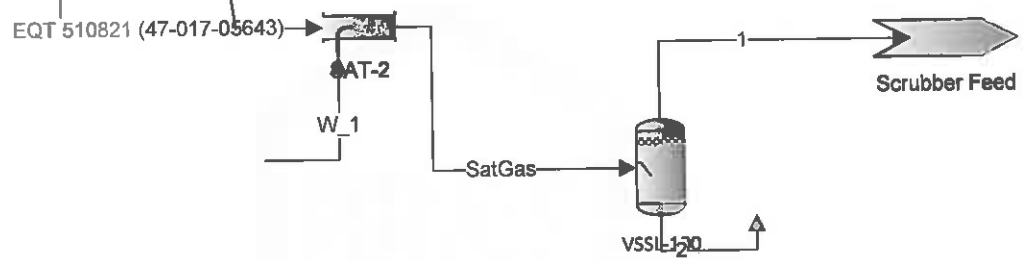

OXFORD STATION
CONE Inlet

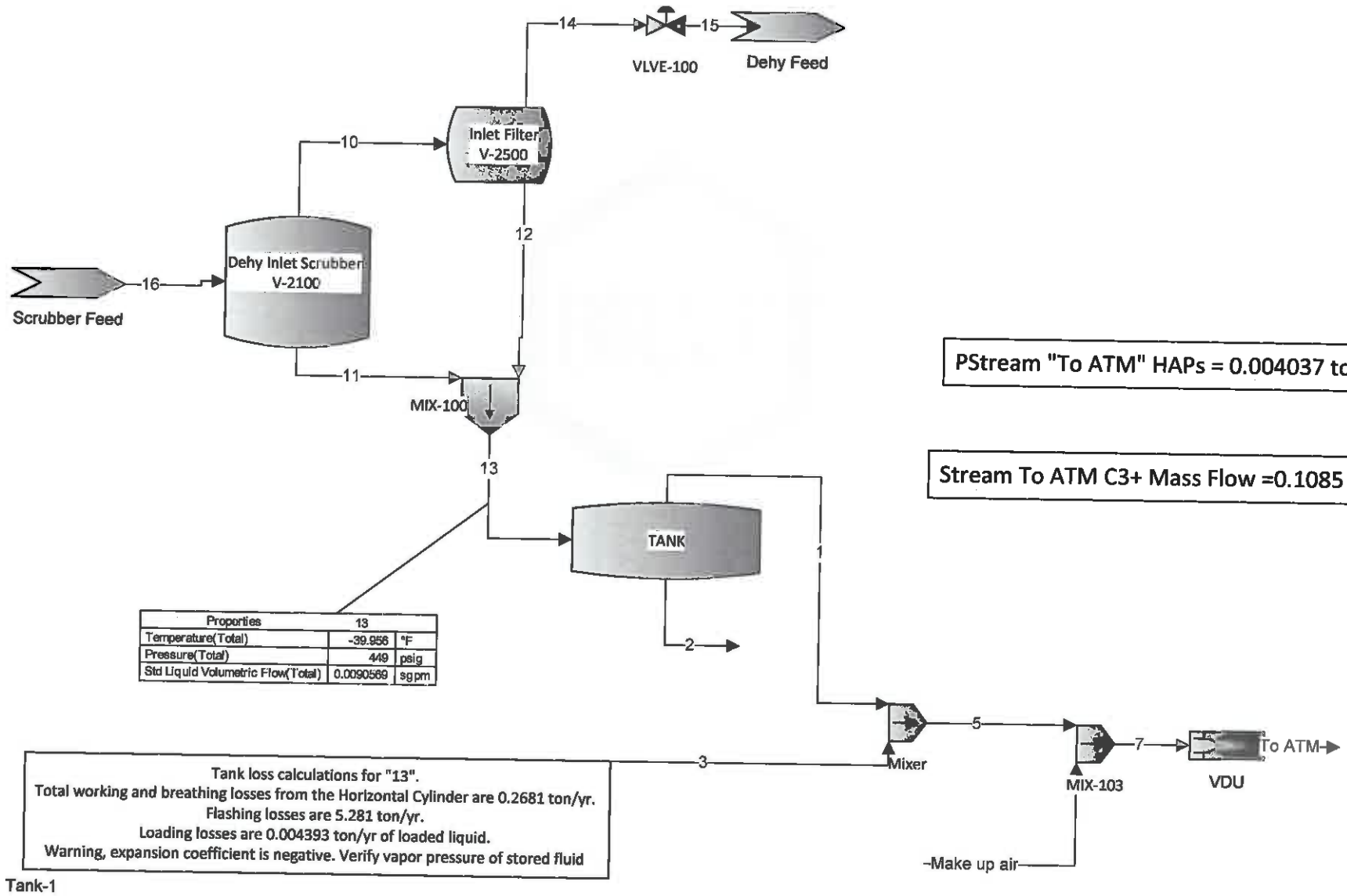

Properties	13	
Temperature(Total)	-39.956	°F
Pressure(Total)	449	psig
Std Liquid Volumetric Flow(Total)	0.0090569	sgpm

PStream "To ATM" HAPs = 0.004037 ton/yr

Stream To ATM C3+ Mass Flow =0.1085 ton/yr

OXFORD STATION
DEHY

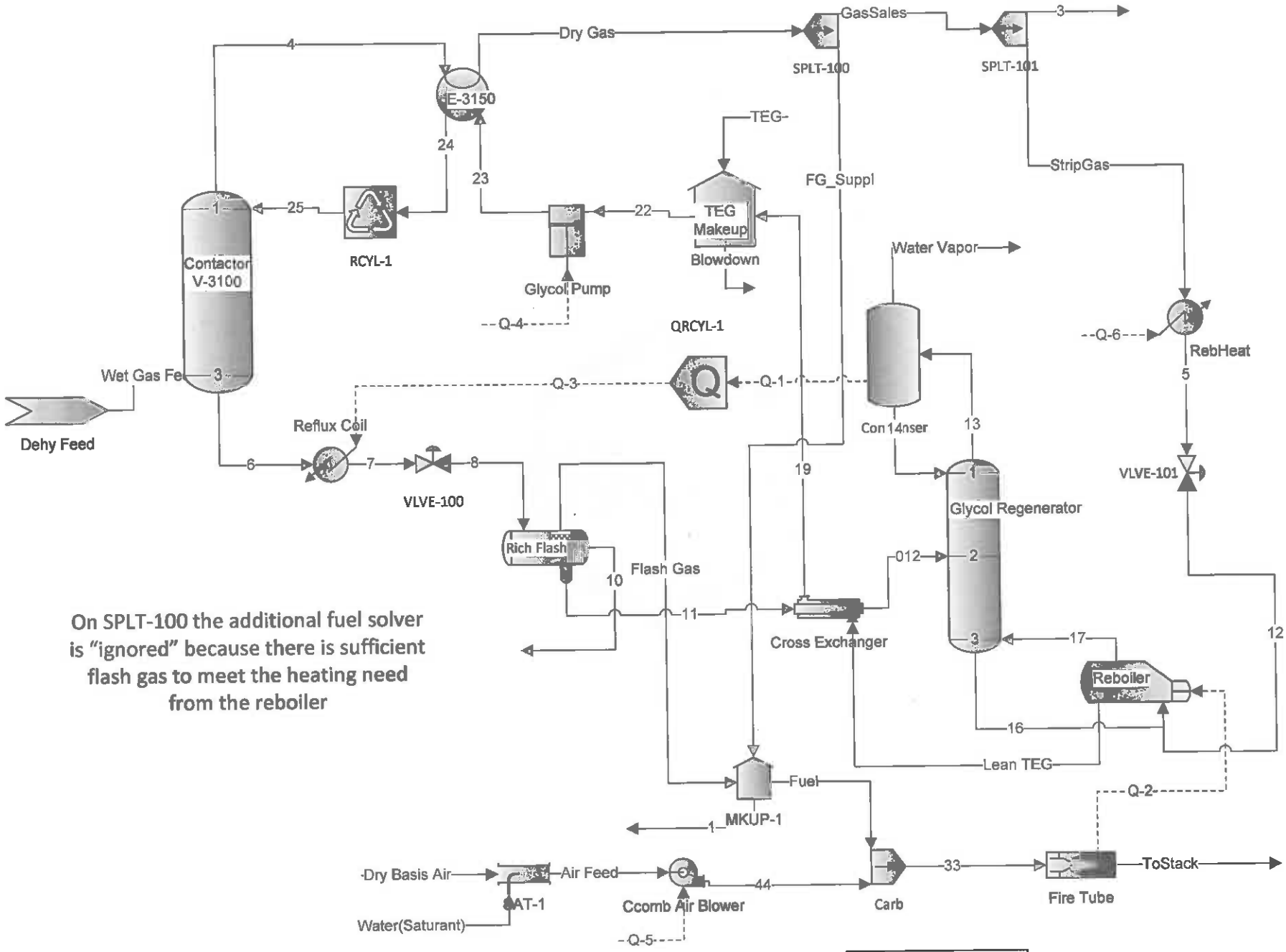

On SPLT-100 the additional fuel solver is "ignored" because there is sufficient flash gas to meet the heating need from the reboiler

[Data Not Ready]

Oxford Process Description

Natural gas from the field comes into pig receiver area. In non-pigging situations, the gas bypasses the pig receiver and flows through a meter and then through the discharge scrubber. When pigging, the gas goes through the pig receiver and liquids drop and go to a 6,000 gallon storage tank.

From the discharge scrubber, the gas goes through an inlet filter and then through the glycol contactor bottom to top, coming into contact with lean glycol traveling top- down, with the glycol absorbing the water in the gas. The gas leaves the contactor going through a glycol/gas exchanger, cooling the lean glycol coming in. The gas then goes through an after contactor coalescor removing any entrained glycol, after which the gas goes into sales.

The rich glycol leaves the bottom of the contactor, goes into low pressure side of the Kimray pump, is pumped through the still column exchanger for preheat, then makes one pass through the gly/gly exchanger, then flows through the flash tank where gas is flashed off (gas used for dehy fuel, excess goes to enclosed flare), then through the sock and charcoal filter , then 4 passes through gly/gly exchanger and into the reboiler.

The lean glycol comes out the reboiler after the water has been evaporated off into the still column, goes through the gly/gly exchanger, makes 5 passes, onto a sock filter, into the high pressure side of kimray pump which lean glycol is then pumped through the glycol/gas exchanger and then into the top of the contactor.

Water is vaporized in the reboiler, leaves the vapor stack, travels to the enclosed flare, where it is burned along with the flash gas and supplemental fuel. Hydrocarbons in the vapor, flash, and fuel are destroyed at a 98% level.

Attachment I

Emission Units Table

(includes all emission units and air pollution control devices that will be part of this permit application review, regardless of permitting status)

Emission Unit ID[1]	Emission Point ID[2]	Emission Unit Description	Year Installed/ Modified	Design Capacity	Type[3] and Date of Change	Control Device[4]
Tank-1	TV-1	Produced Fluids Tank	2014	6000 gallon	New	VDU-1
VDU-1		Vapor Destruction Unit	2014	9MMBTU/hr	New	
SV-1	VS-2	Dehydrator Still Vent	2014	N/A	New	GF-1
BLR-1	VS-1	Dehydrator Reboiler	2014	1MMBTU/hr	New	FLR-1
EG-1	VS-3	Emergency Generator	2014	324 HP	New	
FLR-1		Ground Flare	2014	6MMBTU/hr	New	
BL-1	TL-1	Liquids Unloading (water)	2014		New	VDU-1
FG	FG1	Fugitive Emissions	2014		New	

[1] For Emission Units (or Sources) use the following numbering system:1S, 2S, 3S,... or other appropriate designation.
[2] For Emission Points use the following numbering system:1E, 2E, 3E, ... or other appropriate designation.
[3] New, modification, removal
[4] For Control Devices use the following numbering system: 1C, 2C, 3C,... or other appropriate designation.

Attachment J
EMISSION POINTS DATA SUMMARY SHEET

Table 1: Emissions Data

Emission Point ID No. *(Must match Emission Units Table & Plot Plan)*	Emission Point Type[1]	Emission Unit Vented Through This Point *(Must match Emission Units Table & Plot Plan)*		Air Pollution Control Device *(Must match Emission Units Table & Plot Plan)*		Vent Time for Emission Unit *(chemical processes only)*		All Regulated Pollutants - Chemical Name/CAS[3] *(Speciate VOCs & HAPS)*	Maximum Potential Uncontrolled Emissions[4]		Maximum Potential Controlled Emissions[5]		Emission Form or Phase *(At exit conditions, Solid, Liquid or Gas/Vapor)*	Est. Method Used[6]	Emission Concentration[7] (ppmv or mg/m[4])
		ID No.	Source	ID No.	Device Type	Short Term[2]	Max (hr/yr)		lb/hr	ton/yr	lb/hr	ton/yr			
TV-1	vent	Tank-1		VDU-1				VOC HAP's CO2(eq)	1.267 0.046 6.10	5.549 0.2018 26.73	0.0247 0.001 5.14	0.1085 0.00403 27.24	Gas/Vapor	ProMax	
VS-2	Upward Vertical stack	SV-1		FLR-1				VOC HAP's CO2(eq)	8.594 1.06 1673.03	37.642 4.649 7327.9	0.315 0.0243 33.25	1.3799 0.1063 145.64	Gas/Vapor	GLYCALC	
VS-1	Upward Vertical stack	BLR-1						NOx CO VOC PM CO2(eq)	0.099 0.082 0.005 0.008 118.2	0.43 0.36 0.024 0.033 517.77			Gas/Vapor	HAPCALC	
VS-3	Upward Vertical stack	EG-1						NOx CO VOC PM	1.784 0.5 0.12 0.06	0.446 0.125 0.03 0.015			Gas/Vapor	Man. Data	
TL-1	vent	BL-1		VDU-1				VOC	0.0015	0.006	0.001	0.004	Gas/Vapor	ProMax	

FG1	vent	FG						VOC		4.464			Gas/Vapor	HAPCALC	

The EMISSION POINTS DATA SUMMARY SHEET provides a summation of emissions by emission unit. Note that uncaptured process emission unit emissions are not typically considered to be fugitive and must be accounted for on the appropriate EMISSIONS UNIT DATA SHEET and on the EMISSION POINTS DATA SUMMARY SHEET. Please note that total emissions from the source are equal to all vented emissions, all fugitive emissions, plus all other emissions (e.g. uncaptured emissions). Please complete the FUGITIVE EMISSIONS DATA SUMMARY SHEET for fugitive emission activities.

[1] Please add descriptors such as upward vertical stack, downward vertical stack, horizontal stack, relief vent, rain cap, etc.

[2] Indicate by "C" if venting is continuous. Otherwise, specify the average short-term venting rate with units, for intermittent venting (ie., 15 min/hr). Indicate as many rates as needed to clarify frequency of venting (e.g., 5 min/day, 2 days/wk).

[3] List all regulated air pollutants. Speciate VOCs, including all HAPs. Follow chemical name with Chemical Abstracts Service (CAS) number. **LIST** Acids, CO, CS_2, VOCs, H_2S, Inorganics, Lead, Organics, O_3, NO, NO_2, SO_2, SO_3, all applicable Greenhouse Gases (including CO_2 and methane), etc. **DO NOT LIST** H_2, H_2O, N_2, O_2, and Noble Gases.

[4] Give maximum potential emission rate with no control equipment operating. If emissions occur for less than 1 hr, then record emissions per batch in minutes (e.g. 5 lb VOC/20 minute batch).

[5] Give maximum potential emission rate with proposed control equipment operating. If emissions occur for less than 1 hr, then record emissions per batch in minutes (e.g. 5 lb VOC/20 minute batch).

[6] Indicate method used to determine emission rate as follows: MB = material balance; ST = stack test (give date of test); EE = engineering estimate; O = other (specify).

[7] Provide for all pollutant emissions. Typically, the units of parts per million by volume (ppmv) are used. If the emission is a mineral acid (sulfuric, nitric, hydrochloric or phosphoric) use units of milligram per dry cubic meter (mg/m^3) at standard conditions (68 °F and 29.92 inches Hg) (see 45CSR7). If the pollutant is SO_2, use units of ppmv (See 45CSR10).

Attachment J
EMISSION POINTS DATA SUMMARY SHEET

Table 2: Release Parameter Data

Emission Point ID No. *(Must match Emission Units Table)*	Inner Diameter (ft.)	Exit Gas			Emission Point Elevation (ft)		UTM Coordinates (km)	
		Temp. (°F)	Volumetric Flow [1] (acfm) *at operating conditions*	Velocity (fps)	Ground Level *(Height above mean sea level)*	Stack Height [2] *(Release height of emissions above ground level)*	Northing	Easting

[1] Give at operating conditions. Include inerts.
[2] Release height of emissions above ground level.

Attachment K

FUGITIVE EMISSIONS DATA SUMMARY SHEET

The FUGITIVE EMISSIONS SUMMARY SHEET provides a summation of fugitive emissions. Fugitive emissions are those emissions which could not reasonably pass through a stack, chimney, vent or other functionally equivalent opening. Note that uncaptured process emissions are not typically considered to be fugitive, and must be accounted for on the appropriate EMISSIONS UNIT DATA SHEET and on the EMISSION POINTS DATA SUMMARY SHEET.

Please note that total emissions from the source are equal to all vented emissions, all fugitive emissions, plus all other emissions (e.g. uncaptured emissions).

APPLICATION FORMS CHECKLIST - FUGITIVE EMISSIONS
1.) Will there be haul road activities? ☐ Yes ☒ No ☐ If YES, then complete the HAUL ROAD EMISSIONS UNIT DATA SHEET.
2.) Will there be Storage Piles? ☐ Yes ☒ No ☐ If YES, complete Table 1 of the NONMETALLIC MINERALS PROCESSING EMISSIONS UNIT DATA SHEET.
3.) Will there be Liquid Loading/Unloading Operations? ☒ Yes ☐ No ☐ If YES, complete the BULK LIQUID TRANSFER OPERATIONS EMISSIONS UNIT DATA SHEET.
4.) Will there be emissions of air pollutants from Wastewater Treatment Evaporation? ☐ Yes ☒ No ☐ If YES, complete the GENERAL EMISSIONS UNIT DATA SHEET.
5.) Will there be Equipment Leaks (e.g. leaks from pumps, compressors, in-line process valves, pressure relief devices, open-ended valves, sampling connections, flanges, agitators, cooling towers, etc.)? ☒ Yes ☐ No ☐ If YES, complete the LEAK SOURCE DATA SHEET section of the CHEMICAL PROCESSES EMISSIONS UNIT DATA SHEET.
6.) Will there be General Clean-up VOC Operations? ☐ Yes ☒ No ☐ If YES, complete the GENERAL EMISSIONS UNIT DATA SHEET.
7.) Will there be any other activities that generate fugitive emissions? ☐ Yes ☒ No ☐ If YES, complete the GENERAL EMISSIONS UNIT DATA SHEET or the most appropriate form.
If you answered "NO" to all of the items above, it is not necessary to complete the following table, "Fugitive Emissions Summary."

FUGITIVE EMISSIONS SUMMARY	All Regulated Pollutants Chemical Name/CAS [1]	Maximum Potential Uncontrolled Emissions [2]		Maximum Potential Controlled Emissions [3]		Est. Method Used [4]
		lb/hr	ton/yr	lb/hr	ton/yr	
Haul Road/Road Dust Emissions Paved Haul Roads						
Unpaved Haul Roads						
Storage Pile Emissions						
Loading/Unloading Operations						
Wastewater Treatment Evaporation & Operations						
Equipment Leaks		Does not apply	4.46	Does not apply	4.46	HAPCALC
General Clean-up VOC Emissions						
Other						

[1] List all regulated air pollutants. Speciate VOCs, including all HAPs. Follow chemical name with Chemical Abstracts Service (CAS) number. LIST Acids, CO, CS_2, VOCs, H_2S, Inorganics, Lead, Organics, O_3, NO, NO_2, SO_2, SO_3, all applicable Greenhouse Gases (including CO_2 and methane), etc. DO NOT LIST H_2, H_2O, N_2, O_2, and Noble Gases.

[2] Give rate with no control equipment operating. If emissions occur for less than 1 hr, then record emissions per batch in minutes (e.g. 5 lb VOC/20 minute batch).

[3] Give rate with proposed control equipment operating. If emissions occur for less than 1 hr, then record emissions per batch in minutes (e.g. 5 lb VOC/20 minute batch).

[4] Indicate method used to determine emission rate as follows: MB = material balance; ST = stack test (give date of test); EE = engineering estimate; O = other (specify).

Attachment L
EMISSIONS UNIT DATA SHEET
BULK LIQUID TRANSFER OPERATIONS

Furnish the following information for each new or modified bulk liquid transfer area or loading rack, as shown on the *Equipment List Form* and other parts of this application. This form is to be used for bulk liquid transfer operations such as to and from drums, marine vessels, rail tank cars, and tank trucks.

Identification Number (as assigned on *Equipment List Form*):	
1. Loading Area Name: BL-1	
2. Type of cargo vessels accommodated at this rack or transfer point (check as many as apply): ☐ Drums ☐ Marine Vessels ☐ Rail Tank Cars ☒ Tank Trucks	
3. Loading Rack or Transfer Point Data:	
Number of pumps	1
Number of liquids loaded	1
Maximum number of marine vessels, tank trucks, tank cars, and/or drums loading at one time	1
4. Does ballasting of marine vessels occur at this loading area? ☐ Yes ☐ No ☒ Does not apply	
5. Describe cleaning location, compounds and procedure for cargo vessels using this transfer point: Produced Water pumped into tanks	
6. Are cargo vessels pressure tested for leaks at this or any other location? ☐ Yes ☒ No If YES, describe:	

7. Projected Maximum Operating Schedule (for rack or transfer point as a whole):

Maximum	Jan. - Mar.	Apr. - June	July - Sept.	Oct. - Dec.
hours/day	24	24	24	24
days/week	7	7	7	7

weeks/quarter	13	13	13	13

8. Bulk Liquid Data *(add pages as necessary)*:							
Pump ID No.		Pump 1					
Liquid Name		Produced Water					
Max. daily throughput (1000 gal/day)		5000					
Max. annual throughput (1000 gal/yr)		3000					
Loading Method [1]		BF					
Max. Fill Rate (gal/min)		10					
Average Fill Time (min/loading)		500					
Max. Bulk Liquid Temperature (°F)		65					
True Vapor Pressure [2]							
Cargo Vessel Condition [3]		C					
Control Equipment or Method [4]		VB, TO					
Minimum control efficiency (%)		68.5					
Maximum Emission Rate	Loading (lb/hr)						
	Annual (lb/yr)	12					
Estimation Method [5]		EPA					

[1] BF = Bottom Fill SP = Splash Fill SUB = Submerged Fill

[2] At maximum bulk liquid temperature

[3] B = Ballasted Vessel, C = Cleaned, U = Uncleaned (dedicated service), O = other (describe)

[4] List as many as apply (complete and submit appropriate *Air Pollution Control Device Sheets*):CA = Carbon Adsorption LOA = Lean Oil AdsorptionCO = Condensation SC = Scrubber (Absorption)CRA = Compressor-Refrigeration-Absorption TO = Thermal Oxidation or Incineration
CRC = Compression-Refrigeration-Condensation VB = Dedicated Vapor Balance (closed system)
O = other (descibe)

[5] EPA = EPA Emission Factor as stated in AP-42
MB = Material Balance

TM = Test Measurement based upon test data submittal
O = other (describe)

9. **Proposed Monitoring, Recordkeeping, Reporting, and Testing**
Please propose monitoring, recordkeeping, and reporting in order to demonstrate compliance with the proposed operating parameters. Please propose testing in order to demonstrate compliance with the proposed emissions limits.

MONITORING	RECORDKEEPING
all connections during loading	Volume of water Unloaded
REPORTING	TESTING

MONITORING. PLEASE LIST AND DESCRIBE THE PROCESS PARAMETERS AND RANGES THAT ARE PROPOSED TO BE MONITORED IN ORDER TO DEMONSTRATE COMPLIANCE WITH THE OPERATION OF THIS PROCESS EQUIPMENT OPERATION/AIR POLLUTION CONTROL DEVICE.

RECORDKEEPING. PLEASE DESCRIBE THE PROPOSED RECORDKEEPING THAT WILL ACCOMPANY THE MONITORING.

REPORTING. PLEASE DESCRIBE THE PROPOSED FREQUENCY OF REPORTING OF THE RECORDKEEPING.

TESTING. PLEASE DESCRIBE ANY PROPOSED EMISSIONS TESTING FOR THIS PROCESS EQUIPMENT/AIR POLLUTION CONTROL DEVICE.

10. Describe all operating ranges and maintenance procedures required by Manufacturer to maintain warranty

ENVIROTHERM INTERNATIONAL

Flare Stacks – Thermal Oxidizers – Burners & Controls

PROPOSAL FOR Consol Energy

36" DVC Flare System

Customer: Consol Energy
Attn:

Prepared By: Mike Riddell
(817)924-9991 office
(817)789-0949 cell
(817)924-9533 fax
mriddell@irsvc.com

Date Prepared: April 23, 2014

Proposal Number: Q214xxx Rev 0

ENVIROTHERM

Technical Summary

Design Condition

Process inlet stream:

Overhead Still	
Flow Rate:	4,250 SCFH
BTU Value:	39 BTU/CF
Flash Gas	
Flow Rate:	2,100 SCFH
BTU Value:	1,329 BTU/CF
Total Heat input	2.96 MMBTU/HR
System Load Max	6.0 MMBTU/hr
Chamber Exit I.D.	28" I.D.
Chamber Max Temp	1800 °F
Combustion Chamber Temp:	1400 -1600 °F
Residence Time:	≥ 0.88 Sec.
Exit Velocity:	22.78 FT/sec.
Destruction Efficiency:	≥ 98%
Turn Down	10 : 1

Site Conditions:

Wind Speed	90 MPH
Seismic Zone	1
Elevation	1000 ft.
Humidity	High

Utilities:

Gas Service Required for Pilot	100 SCFH – Natural Gas @ 20 PSIG Min. / 150 PSIG Max
Gas Service Required for Assist Fuel	2000 SCFH – Natural Gas @ 20 PSIG Min. (Intermittent Usage)
Electrical Service Required	120 VAC, 60Hz, 1Ph or 24 VDC
Compressed Gas for Valves	80 PSIG – Intermittent

CNXGAS

September 6, 2012

2.7 MW SCUF

Tank Battery Enclosed Flare – 100mcfd

ABUTEC™ Advanced Burner Technologies

ABUTEC LLC
Advanced Burner Technologies
2959 Cherokee Street, Suite 101
Kennesaw, GA 30144
Phone: (770) 846-0155
Fax: (770) 499-7455
www.abutec.com

TABLE OF CONTENTS

I. Introduction

ABUTEC™ is pleased to offer the Medium Temperature Flare (MTF) to meet your site specific needs. The Medium Temperature Flare (MTF) is our standard flare line that offers a **98% Destruction Efficiency**, along with a completely enclosed flame. This unit has been installed at over 800 sites (i.e. Oil & Gas, Ethanol, landfill, wastewater treatment, etc) sites internationally and is successfully proven throughout the United States tank battery industry.

ADVANTAGES OF USING ABUTEC's UNIQUE FLARING TECHNOLOGY:

- **Operating Temperatures** up to 2100 deg F
- **Compact & Easy to Install Design** (UNIT ARRIVES FULLY ASSEMBELED AND TESTED)
- **Eliminate Pilot Gas and operate on Process Gas ONLY**
- **Completely Enclosed Combustion** prevents the environment from being exposed to IR radiation, heat and light. There is no need for cooling the environment by water spraying.

II. Design Basis

Flare Gas Stream

Type:	Enclosed Tank Battery Flare
Composition:	2200 btu/ft3 gas
Temperature:	Ambient to 100°F +/- 20 deg°F
Flow Rate:	up to 100,000 scfd (standard cubic feet per day) or 69.5 scfm
Auxiliary Fuel Requirements	N/A
Burner Size	9.21 million BTU/hr (2.7 MW)
Inlet Pressure Requirements	2-4 oz/in2 (3.5-7.0 "w.c.)
Turndown Ratio	5:1

Mechanical

Design Wind Speed	100 mph
Ambient Temperature	-30 deg F up to 120 deg F
Electrical Area Classification	General Area Classification (non-hazardous)
Elevation	Up to 3,000 ft ASL – please advise if higher elevation

Process

Smokeless Capacity	100%
Operating Temperature	1400 deg F to 2100 deg F (1500 deg F Nominal);
Retention Time	0.3 sec
Flare Inlet Pressure	2-4 oz/in2 (3.5-7.0 "w.c.)

Utilities

Pilot Gas	Process Gas
Electricity	1 Phase, 60 Hz, 120V / 10A (Solar Option)
Auxiliary Fuel	N/A

Emissions (Guaranteed by ABUTEC LLC)

Destruction Efficiency:	98% DRE

III. Narrative Solutions (MTF – Medium Temperature Flare)

General Information Regarding Our Scope of Supply:

All installations according to our technical data sheet are delivered fully mounted, functionally tested (without gas), and ready for site installation and operation. ABUTEC will include a Factory Acceptance Test (FAT) Report upon completion of the FAT.

General Process Engineering Data:

The flare will have an AUTO /OFF setting on the control panel. In AUTO mode, the flare will be in standby awaiting sufficient gas pressure (as sensed by the pressure switch – field settable). Once the "Flare Start" pressure is reached, the solenoid will open and the spark igniter will begin sparking. We have several safety shutdown's built into the system that will be discussed and agreed upon during detailed engineering of the system. If a safety shutdown parameter is reached, the Main Control Valves will close.

Technical Description of BIOGAS COMBUSTION UNIT (MTF):

Dimension*		Materials of Construction:	
Number of Burner Circles*	1Internal Mulit-Nozzle Burner Assembly	Flare Stack Enclosure	Stainless Steel 304 Stack
Inlet Gas Line	3" or as determined during detailed engineering	Base Frame / Stand	Stainless Steel 304 or Galvanized Carbon Steel
Total Height Excluding Foundation*	15ft Stack (est) 16ft Total Height	Burner	Stainless Steel 316 or equivalent
Base Dimensions* Weight (lbs)	3ft x 3ft (est) 1,000 lbs (est)	Piping	Stainless Steel 304
Combustion Chamber Diameter*	33" (est) Schedule 10 thickness	Gas Fittings	In accordance with NFPA, UL, and/or CSA

***Actual Dimensions determined in Design Phase and sent to customer for Review & Approval**

Scope of Supply:

1 Flare unit consisting of Burner (greater than 98% Combustion Efficiency and **0.3s** retention time), Stainless Steel Construction.

1 Thermocouple for Temperature Indication

1 Ignition transformer (6.0kV, 100% duty ratio) and ignition electrode (pilot flame safety)

1 Gas Inlet Line consisting of:

- Deflagration flame arrestor (built into the system) with ATEX certification, Explosion Proof Category 3 (Type RMG or equivalent); Aluminum
- Automatic Solenoid Valve **(Electric)**
- Pressure Switch to start/stop on low pressure

1 Automatic Control System to Monitor Flare Operation, consisting of:

- Fully Integrated Control Panel/Cabinet (NEMA 4)

1 Sets Documentation consisting of:

- Operating and maintenance instructions, P&ID, General Arrangement Drawing (GAD), Control Philosophy, Electrical Drawings, and Spare Part List.

MTF APPLICATION PHOTOS

For Review and Approval

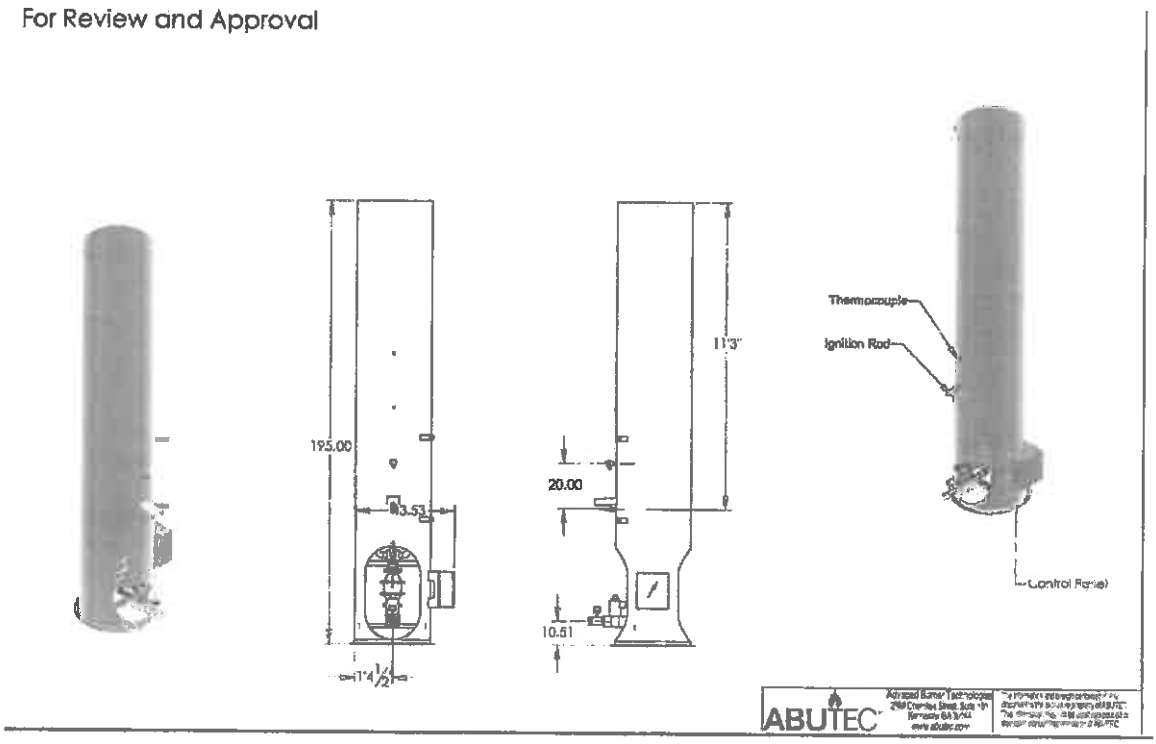

IV. Service &Startup Description

Billed Separately through another party

V. Typical Spare Parts List

The following is a list of spare parts suggested for the system being specified. The prices are net unit prices and represent FOB Kennesaw, GA (ABUTEC Facility). Typical lead-time is 2-4 weeks.

Thermocouple, Type K, (QTY: 1):	$287.00
Pressure Switch, (QTY: 1):	$237.00
Ignition Transformer (QTY 1):	$359.00
Spark Electrode (QTY: 1):	$53.00

VI. System Pricing (all prices USD)

Order Quantity	System Description	Net Unit Price (USD)
1-10 pcs	**MTF 2.7, as specified in Section III (Startup Included)**	**$18,650.00**
11+ pcs	**MTF 2.7, as specified in Section III (Startup Included)**	**$16,700.00**
Optional	**1 Year Service Package (Tuning of Unit at site, Field Maintenance, Spare Parts, and 24/7 support)**	**$2,250.00 Price per Unit**
Optional	**Data Logging Package (Pressure, Temperature, Run Time)**	**$2,037.00**
Optional	**Solar Package (when site power is not available)** ***Scope of Supply will change slightly to minimize the power consumption***	**$4,576.00**
Optional	**Transport to Site (FOB Destination) Approximately 12 units can fit onto one truck**	**Pre-Pay and Add**

Delivery Schedule: 4 weeks from receipt of order

General Terms & Conditions

1. Specifications. This quotation is based upon our understanding of the data and specifications submitted to ABUTEC (Seller) by the customer (Purchaser). The following relates to products or equipment (Equipment) supplied by Seller.
2. Shipment. **FOB DESTINATION**
3. Taxes. Pricing does not include any federal, state, or local sales, use, property, excise, or other similar taxes applicable to or imposed upon the equipment in this proposal. Taxes are the responsibility of the Purchaser. Any taxes required to be paid by the Seller shall be added to the pricing and paid to the Seller

by the Purchaser, or in lieu thereof Buyer shall provide Seller with a tax exemption certificate acceptable to all applicable taxing authorities. Without limiting any other provisions herein, the obligations in this Section 3 shall survive Buyer's payment.

4. Governing Law. The rights and obligations of Purchaser and Seller shall be construed in accordance with and governed by the laws of the State of Alabama without regard to principles of conflicts of law.

5. Delivery and Delays. The delivery time quoted is approximate and estimated from receipt of a written purchase order. The Seller shall not be liable for any loss or damage for delay or non-delivery due to the acts of civil or military authority, acts of the Purchaser or by reason of "force majeure", which shall be deemed to mean all other causes whatsoever not reasonably within control of the Seller including, but not limited to acts of God, war, riots, blockades, embargoes, sabotage, fires, epidemics, strikes, lockouts, delays of carriers, and inability to secure/obtain materials, labor or manufacturing facilities. Shipping dates will correspondingly shift with any such delays. Seller shall not in any event be liable for any special, indirect or consequential damages arising from any delay. Receipt by the Purchaser shall constitute acceptance of delivery and waiver of any claims due to delay.

6. Payment. Payment shall be due and payable in U.S. dollars per the quotation (Net 30). Payments shall be made based upon the following progress:

   a. **Net 30 from Completion of Units**

7. Cancellation. Purchaser may cancel his order only upon written notice and payment to Seller of all losses and expenses, including but not limited to lost profits for the order. Seller may cancel this order if (a) Buyer's payments are in default on this or any other order, or Buyer breaches any other material provision hereunder, (b) substantial changes occur in the availability of raw materials or components provided by third party vendors, (c) events beyond Seller's reasonable control as specified in Paragraph 5 make it impossible to secure shipment, (d) Buyer becomes insolvent or is the subject of the filing of a bankruptcy petition, or makes an assignment for the benefit of creditors or fails to pay its debts as they come due, or (e) Seller has reasonable belief that Buyer is insolvent or will not pay in accordance with the terms herein.

8. Withdrawal of Quotations. Seller reserves the right to withdraw any/all quotations.

9. Changes in Work. If Purchaser finds it necessary to make changes in the Work, Seller and Purchaser will mutually agree upon price impact whether higher or lower, before the Seller makes such changes. Seller reserves the right to make product and design changes in goods ordered which will not adversely affect form, fit or function requirements, with notification to or price approval by Buyer. All changes requested by Buyer in the process or design of goods are subject to written approval by Seller and to reasonable changes in delivery and price as Seller determines is necessitated thereby.

10. Warranty. Provided the product is installed as specified by Seller, maintained per Seller's instructions, and operated strictly within Seller's performance specifications, the Seller warrants that the Equipment shall be free from defects in material and workmanship for a period of twelve (12) months from the date of successful commissioning and startup or eighteen (18) months from delivery to site and provided Purchaser shall, within such period, notify the Seller in writing of such defect(s) and fully cooperate with Seller in pursuing the remedy. Seller's sole obligation under this warranty shall be limited to, at Seller's option, correcting such defects either by suitable repair to equipment or parts or by furnishing replacement equipment or parts, FOB ORIGIN.

    a. Seller has the right to validate defects by inspection and to verify that such alleged deficiencies actually exist and were not caused by accident, misuse, neglect, alteration, improper installation, or unauthorized repair. All replaced parts shall become the property of Seller. Expendable parts, such as lubricants, fuses, filters, motor brushes, lamps, etc are excluded from this warranty. If the

repair work is performed at the Buyer's facility, the Buyer is responsible for all travel, lodging and car rental expenses.

b. THE SELLER MAKES NO OTHER WARRANTY OR REPRESENTATION OF ANY KIND. ALL OTHER WARRANTIES EXPRESSED OR IMPLIED, INCLUDING BUT NOT LIMITED TO THE IMPLIED WARRANTIES OF MERCHANTABILITY AND FITNESS FOR A PARTICULAR PURPOSE IS HEREBY DISCLAIMED. With respect to parts/work manufactured by others, Seller shall, to the extent assignable, assign to Purchaser the warranty Seller receives from the manufacturer. Seller shall not be liable for any repairs, replacements, or adjustments to the Equipment or any costs of labor performed by Purchaser without Seller's prior written approval.

c. The warranty obligation under this warranty for units outside the continental U.S is limited to the repair or replacement of defective parts and does not include removal or reinstallation of warranted parts.

d. No equipment or part furnished by Seller shall be deemed to be defective by reason of normal wear and tear, failure to resist erosive or corrosive action by any fluid or gas, or by Purchaser's failure to properly store, install, operate, or maintain the equipment in accordance with good industry practices or specific recommendations of Seller.

11. Limitation of Liability. THE TOTAL LIABILITY OF SELLER SHALL NOT EXCEED THE PURCHASE PRICE OF THE EQUIPMENT. THE SELLER SHALL IN NO EVENT BE LIABLE FOR ANY CONSEQUENTIAL, INCIDENTAL, INDIRECT, SPECIAL, OR PUNITIVE DAMAGES ARISING OUT OF THIS CONTRACT.

12. Termination. Should the financial responsibility of Buyer at any time become unsatisfactory to Seller, Seller shall have the right to suspend performance of any order or require payment for any shipment hereunder in advance or require satisfactory security or other adequate assurance satisfactory to Seller. If Buyer fails to make payment in accordance with the terms of this Agreement or fails to comply with any provisions hereunder, Seller may, at its option, in addition to any other remedies, cancel any unshipped portion of this order, Buyer to remain liable for all unpaid accounts. In the event Buyer fails to make payment in accordance with the terms of this Agreement, the unpaid amount shall be deemed to be delinquent and the balance due shall bear interest at the maximum rate of interest permitted by applicable law until paid in full. Buyer agrees to pay all collection costs and expenses, including reasonable attorneys' fees incurred by Seller in collecting or attempting to collect such account. Payment by the Buyer for the price of the order shall be a condition precedent to Buyer's right to assert any claim against Seller.

13. Assignment. Neither Purchaser nor Seller shall assign or transfer the responsibilities of the contract or purchase order without the prior written consent of the other party, not to be unreasonably withheld.

14. Title and Risk of Loss. Title and risk of loss or damage to the Equipment shall pass to Purchaser FOB **LOCATION**.

15. Acceptance and Inspection. Purchaser shall have the right to reasonable inspection of the Equipment after delivery to destination. Inspection to be completed within fourteen (14) days of the date of delivery to destination. Purchaser to make all claims including shortages in writing within the fourteen- (14) day period or they are waived. There shall be no revocation of acceptance.

16. Delivery Schedule. Standard delivery is 12 weeks from receipt of order, however, shorter delivery is available. Shorter delivery must be agreed in writing between Purchaser and Seller.

17. Confidentiality. Buyer and its employees agree to maintain as confidential any Seller supplied proprietary information, regardless of form, and Buyer shall not disclose any such proprietary information

to any other person or entity or use such proprietary information for its own purpose or benefit without Seller's written permission.

18. Separability. If any part of these Terms and Conditions is held void or unenforceable, such part shall be treated as severable, leaving valid the remainder.

19. Waiver. The failure of Seller to insist in any one or more instances upon the performance of any of the terms or conditions herein, or to exercise any right hereunder, shall not be construed as a waiver of any other terms or conditions herein nor of the future performance of any term or condition or the future exercise of any such rights. The failure of Seller to require strict performance of any provision shall not diminish Seller's right thereafter to require strict performance of any provision.

GRI-HAPCalc ® 3.01
Fugitive Emissions Report

Facility ID:	**OXFORD**	**Notes:**
Operation Type:	**GAS PLANT**	
Facility Name:	**OXFORD STATION**	
User Name:		
Units of Measure:	**U.S. STANDARD**	

Note: Emissions less than 5.00E-09 tons (or tonnes) per year are considered insignificant and are treated as zero. These emissions are indicated on the report with a "0". Emissions between 5.00E-09 and 5.00E-05 tons (or tonnes) per year are represented on the report with "0.0000".

Fugitive Emissions

Calculation Method: EPA Average Factors

User Inputs

Component	Gas Service	Light Liquid Service	Heavy Liquid Service
Connections:	1000	0	0
Flanges	650	20	0
Open-Ended Lines:	50	5	0
Pumps:	4	1	0
Valves:	150	20	0
Others:	50	10	0

Calculated Emissions (ton/yr)

Chemical Name	Emissions
HAPs	
Benzene	0.0199
Toluene	0.0062
Ethylbenzene	0.0004
Xylenes(m,p,o)	0.0012
Total	0.0277
Criteria Pollutants	
NMHC	7.6803
NMEHC	4.4643

GRI-GLYCalc VERSION 4.0 - SUMMARY OF INPUT VALUES

Case Name: Oxford Station
File Name: C:¥Program Files¥GRI-GLYCalc4¥Oxford.ddf
Date: August 29, 2014

DESCRIPTION:

Description:

Annual Hours of Operation: 8760.0 hours/yr

WET GAS:

Temperature: 100.00 deg. F
Pressure: 450.00 psig
Wet Gas Water Content: Saturated

Component	Conc. (vol %)
Carbon Dioxide	0.1889
Methane	85.3837
Ethane	11.8439
Propane	1.7862
Isobutane	0.1051
n-Butane	0.1394
Isopentane	0.0141
n-Pentane	0.0104
Cyclopentane	0.0021
n-Hexane	0.0087
Other Hexanes	0.0764
Heptanes	0.0999
Methylcyclohexane	0.0000
2,2,4-Trimethylpentane	0.0000
Toluene	0.0006
Xylenes	0.0002
C8+ Heavies	0.0009

DRY GAS:

Flow Rate: 50.0 MMSCF/day
Water Content: 5.0 lbs. H2O/MMSCF

LEAN GLYCOL:

Glycol Type: TEG
Water Content: 1.5 wt% H2O
Recirculation Ratio: 3.0 gal/lb H2O

PUMP:

Glycol Pump Type: Gas Injection
Gas Injection Pump Volume Ratio: 0.080 acfm gas/gpm glycol

FLASH TANK:

Flash Control: Combustion device
Flash Control Efficiency: 98.00 %
Temperature: 130.0 deg. F
Pressure: 35.0 psig

REGENERATOR OVERHEADS CONTROL DEVICE:

Control Device: Combustion Device
Destruction Efficiency: 98.0 %
Excess Oxygen: 150.0 %
Ambient Air Temperature: 70.0 deg. F

GRI-GLYCalc VERSION 4.0 - EMISSIONS SUMMARY

Case Name: Oxford Station
File Name: C:¥Program Files¥GRI-GLYCalc4¥Oxford.ddf
Date: August 29, 2014

CONTROLLED REGENERATOR EMISSIONS

Component	lbs/hr	lbs/day	tons/yr
Methane	0.0169	0.405	0.0740
Ethane	0.0188	0.452	0.0825
Propane	0.0119	0.285	0.0521
Isobutane	0.0016	0.039	0.0071
n-Butane	0.0032	0.078	0.0142
Isopentane	0.0005	0.011	0.0021
n-Pentane	0.0005	0.012	0.0022
Cyclopentane	0.0008	0.018	0.0033
n-Hexane	0.0012	0.029	0.0052
Other Hexanes	0.0068	0.163	0.0298
Heptanes	0.0433	1.040	0.1897
Methylcyclohexane	0.0001	0.001	0.0003
2,2,4-Trimethylpentane	<0.0001	<0.001	<0.0001
Toluene	0.0114	0.274	0.0500
Xylenes	0.0086	0.205	0.0375
C8+ Heavies	0.0068	0.163	0.0298
Total Emissions	0.1324	3.177	0.5798
Total Hydrocarbon Emissions	0.1324	3.177	0.5798
Total VOC Emissions	0.0966	2.320	0.4233
Total HAP Emissions	0.0212	0.508	0.0927
Total BTEX Emissions	0.0200	0.479	0.0875

UNCONTROLLED REGENERATOR EMISSIONS

Component	lbs/hr	lbs/day	tons/yr
Methane	0.8445	20.268	3.6990
Ethane	0.9414	22.593	4.1232
Propane	0.5948	14.274	2.6051
Isobutane	0.0815	1.957	0.3572
n-Butane	0.1624	3.898	0.7113
Isopentane	0.0238	0.571	0.1042
n-Pentane	0.0251	0.602	0.1098
Cyclopentane	0.0375	0.901	0.1644
n-Hexane	0.0594	1.427	0.2604
Other Hexanes	0.3400	8.160	1.4891

Heptanes	2.1661	51.986	9.4874
Methylcyclohexane	0.0029	0.070	0.0129
2,2,4-Trimethylpentane	<0.0001	0.001	0.0001
Toluene	0.5713	13.710	2.5021
Xylenes	0.4276	10.262	1.8728
C8+ Heavies	0.3400	8.160	1.4892
Total Emissions	6.6183	158.839	28.9881
Total Hydrocarbon Emissions	6.6183	158.839	28.9881
Total VOC Emissions	4.8324	115.978	21.1659
Total HAP Emissions	1.0583	25.399	4.6354
Total BTEX Emissions	0.9988	23.972	4.3749

FLASH GAS EMISSIONS

Component	lbs/hr	lbs/day	tons/yr
Methane	1.3215	31.717	5.7883
Ethane	0.4358	10.460	1.9090
Propane	0.1196	2.871	0.5240
Isobutane	0.0110	0.263	0.0481
n-Butane	0.0167	0.401	0.0732
Isopentane	0.0022	0.052	0.0095
n-Pentane	0.0018	0.044	0.0080
Cyclopentane	0.0007	0.018	0.0032
n-Hexane	0.0024	0.058	0.0107
Other Hexanes	0.0185	0.444	0.0810
Heptanes	0.0440	1.057	0.1928
Methylcyclohexane	<0.0001	0.001	0.0001
2,2,4-Trimethylpentane	<0.0001	<0.001	<0.0001
Toluene	0.0005	0.013	0.0023
Xylenes	0.0002	0.004	0.0007
C8+ Heavies	0.0007	0.016	0.0030
Total Emissions	1.9758	47.418	8.6538
Total Hydrocarbon Emissions	1.9758	47.418	8.6538
Total VOC Emissions	0.2184	5.241	0.9566
Total HAP Emissions	0.0031	0.075	0.0136
Total BTEX Emissions	0.0007	0.016	0.0030

FLASH TANK OFF GAS

Component	lbs/hr	lbs/day	tons/yr
Methane	66.0767	1585.841	289.4161

Ethane	21.7917	523.000	95.4475
Propane	5.9816	143.558	26.1994
Isobutane	0.5488	13.172	2.4038
n-Butane	0.8356	20.054	3.6599
Isopentane	0.1088	2.612	0.4766
n-Pentane	0.0916	2.197	0.4010
Cyclopentane	0.0367	0.880	0.1607
n-Hexane	0.1217	2.920	0.5329
Other Hexanes	0.9247	22.192	4.0500
Heptanes	2.2012	52.829	9.6413
Methylcyclohexane	0.0012	0.030	0.0054
2,2,4-Trimethylpentane	0.0001	0.001	0.0002
Toluene	0.0262	0.629	0.1149
Xylenes	0.0078	0.187	0.0341
C8+ Heavies	0.0338	0.812	0.1481
Total Emissions	98.7881	2370.915	432.6920
Total Hydrocarbon Emissions	98.7881	2370.915	432.6920
Total VOC Emissions	10.9197	262.073	47.8284
Total HAP Emissions	0.1557	3.737	0.6821
Total BTEX Emissions	0.0340	0.816	0.1489

COMBINED REGENERATOR VENT/FLASH GAS EMISSIONS

Component	lbs/hr	lbs/day	tons/yr
Methane	1.3384	32.122	5.8623
Ethane	0.4547	10.912	1.9914
Propane	0.1315	3.157	0.5761
Isobutane	0.0126	0.303	0.0552
n-Butane	0.0200	0.479	0.0874
Isopentane	0.0027	0.064	0.0116
n-Pentane	0.0023	0.056	0.0102
Cyclopentane	0.0015	0.036	0.0065
n-Hexane	0.0036	0.087	0.0159
Other Hexanes	0.0253	0.607	0.1108
Heptanes	0.0873	2.096	0.3826
Methylcyclohexane	0.0001	0.002	0.0004
2,2,4-Trimethylpentane	<0.0001	<0.001	<0.0001
Toluene	0.0119	0.287	0.0523
Xylenes	0.0087	0.209	0.0381
C8+ Heavies	0.0075	0.179	0.0327
Total Emissions	2.1081	50.595	9.2336
Total Hydrocarbon Emissions	2.1081	50.595	9.2336
Total VOC Emissions	0.3150	7.561	1.3799

Total HAP Emissions	0.0243	0.583	0.1063
Total BTEX Emissions	0.0207	0.496	0.0905

GRI-HAPCalc ® 3.01
External Combustion Devices Report

Facility ID:	**OXFORD**	**Notes:**
Operation Type:	**GAS PLANT**	
Facility Name:	**OXFORD STATION**	
User Name:		
Units of Measure:	**U.S. STANDARD**	

Note: Emissions less than 5.00E-09 tons (or tonnes) per year are considered insignificant and are treated as zero. These emissions are indicated on the report with a "0". Emissions between 5.00E-09 and 5.00E-05 tons (or tonnes) per year are represented on the report with "0.0000".

External Combustion Devices

Unit Name: BLR-1

Hours of Operation:	8,760	Yearly
Heat Input:	1.00	MMBtu/hr
Fuel Type:	NATURAL GAS	
Device Type:	BOILER	
Emission Factor Set:	EPA > FIELD > LITERATURE	
Additional EF Set:	-NONE-	

Calculated Emissions (ton/yr)

Chemical Name	Emissions	Emission Factor	Emission Factor Set
HAPs			
3-Methylcholanthrene	0.0000	0.0000000018 lb/MMBtu	EPA
7,12-Dimethylbenz(a)anthracene	0.0000	0.0000000157 lb/MMBtu	EPA
Formaldehyde	0.0003	0.0000735294 lb/MMBtu	EPA
Methanol	0.0019	0.0004333330 lb/MMBtu	GRI Field
Acetaldehyde	0.0013	0.0002909000 lb/MMBtu	GRI Field
1,3-Butadiene	0.0000	0.0000001830 lb/MMBtu	GRI Field
Benzene	0.0000	0.0000020588 lb/MMBtu	EPA
Toluene	0.0000	0.0000033333 lb/MMBtu	EPA
Ethylbenzene	0.0000	0.0000000720 lb/MMBtu	GRI Field
Xylenes(m,p,o)	0.0000	0.0000010610 lb/MMBtu	GRI Field
2,2,4-Trimethylpentane	0.0001	0.0000323000 lb/MMBtu	GRI Field
n-Hexane	0.0077	0.0017647059 lb/MMBtu	EPA
Phenol	0.0000	0.0000000950 lb/MMBtu	GRI Field
Naphthalene	0.0000	0.0000005980 lb/MMBtu	EPA
2-Methylnaphthalene	0.0000	0.0000000235 lb/MMBtu	EPA
Acenaphthylene	0.0000	0.0000000018 lb/MMBtu	EPA
Biphenyl	0.0000	0.0000011500 lb/MMBtu	GRI Field
Acenaphthene	0.0000	0.0000000018 lb/MMBtu	EPA
Fluorene	0.0000	0.0000000027 lb/MMBtu	EPA
Anthracene	0.0000	0.0000000024 lb/MMBtu	EPA
Phenanthrene	0.0000	0.0000000167 lb/MMBtu	EPA
Fluoranthene	0.0000	0.0000000029 lb/MMBtu	EPA
Pyrene	0.0000	0.0000000049 lb/MMBtu	EPA
Benz(a)anthracene	0.0000	0.0000000018 lb/MMBtu	EPA

Chrysene	0.0000	0.0000000018	lb/MMBtu	EPA
Benzo(a)pyrene	0.0000	0.0000000012	lb/MMBtu	EPA
Benzo(b)fluoranthene	0.0000	0.0000000018	lb/MMBtu	EPA
Benzo(k)fluoranthene	0.0000	0.0000000018	lb/MMBtu	EPA
Benzo(g,h,i)perylene	0.0000	0.0000000012	lb/MMBtu	EPA
Indeno(1,2,3-c,d)pyrene	0.0000	0.0000000018	lb/MMBtu	EPA
Dibenz(a,h)anthracene	0.0000	0.0000000012	lb/MMBtu	EPA
Lead	0.0000	0.0000004902	lb/MMBtu	EPA
Total	0.0113			

Criteria Pollutants

VOC	0.0236	0.0053921569	lb/MMBtu	EPA
PM	0.0326	0.0074509804	lb/MMBtu	EPA
PM, Condensible	0.0245	0.0055882353	lb/MMBtu	EPA
PM, Filterable	0.0082	0.0018627451	lb/MMBtu	EPA
CO	0.3607	0.0823529410	lb/MMBtu	EPA
NMHC	0.0374	0.0085294118	lb/MMBtu	EPA
NOx	0.4294	0.0980392157	lb/MMBtu	EPA
SO2	0.0026	0.0005880000	lb/MMBtu	EPA

Other Pollutants

Dichlorobenzene	0.0000	0.0000011765	lb/MMBtu	EPA
Methane	0.0099	0.0022549020	lb/MMBtu	EPA
Acetylene	0.0234	0.0053314000	lb/MMBtu	GRI Field
Ethylene	0.0023	0.0005264000	lb/MMBtu	GRI Field
Ethane	0.0133	0.0030392157	lb/MMBtu	EPA
Propylene	0.0041	0.0009333330	lb/MMBtu	GRI Field
Propane	0.0069	0.0015686275	lb/MMBtu	EPA
Butane	0.0090	0.0020588235	lb/MMBtu	EPA
Cyclopentane	0.0002	0.0000405000	lb/MMBtu	GRI Field
Pentane	0.0112	0.0025490196	lb/MMBtu	EPA
n-Pentane	0.0088	0.0020000000	lb/MMBtu	GRI Field
Cyclohexane	0.0002	0.0000451000	lb/MMBtu	GRI Field
Methylcyclohexane	0.0007	0.0001691000	lb/MMBtu	GRI Field
n-Octane	0.0002	0.0000506000	lb/MMBtu	GRI Field
n-Nonane	0.0000	0.0000050000	lb/MMBtu	GRI Field
CO2	515.2941	117.6470588235	lb/MMBtu	EPA

West Virginia Department of Environmental Protection

DIVISION OF AIR QUALITY : (304) 926-0475
WEB PAGE: http:\\www.wvdep.org

Division of Air Quality

40 CFR Part 63; Subpart HH & HHH Registration Form

Complete this form for any oil and natural gas production or natural gas transmission and storage facility that uses an affected unit under HH/HHH, whether subject or not.

Section A: Facility Description		
Affected facility actual annual average natural gas throughput (scf/day):	50,000,000	
Affected facility actual annual average hydrocarbon liquid throughput: (bbl/day):	0	
The affected facility processes, upgrades, or stores hydrocarbon liquids prior to custody transfer.	Yes	X No
The affected facility processes, upgrades, or stores natural gas prior to the point at which natural gas (NG) enters the NG transmission and storage source category or is delivered to the end user. The affected facility is: ☐ prior to a NG processing plant ☐ a NG processing plant ☒ prior to the point of custody transfer and there is no NG processing plant	Yes	X No
The affected facility transports or stores natural gas prior to entering the pipeline to a local distribution company or to a final end user (if there is no local distribution company).	Yes	X No
The affected facility exclusively processes, stores, or transfers black oil. Initial producing gas-to-oil ratio (GOR): _____ scf/bbl API gravity: _____ degrees	Yes	X No

Section B: Dehydration Unit (if applicable) [1]			
Description:	**Exterran Dehy**		
Date of Installation:	**As soon as approved.**	Annual Operating Hours: **8760**	Burner rating (MMbtu/hr): **1.0**
Exhaust Stack Height (ft):	**17**	Stack Diameter (ft): **1.5**	Stack Temp. (°F): **500**
Glycol Type:	☒ TEG ☐ EG ☐ Other:		
Glycol Pump Type:	☐ Electric ☒ Gas	If gas, what is the volume ratio? _____ ACFM/gpm	
Condenser installed?	☐ Yes ☒ No	Exit Temp. _____ °F Condenser Pressure _____ psig	
Incinerator/flare installed?	☒ Yes ☐ No	Destruction Eff. __98__ %	
Other controls installed?	☒ Yes ☐ No	Describe: Flash gas router to boiler	
Wet Gas[2]: (Upstream of Contact Tower)	Gas Temp.: __100__ °F Gas Pressure __500__ psig Saturated Gas? ☒ Yes ☐ No	If no, water content _____ lb/MMSCF	
Dry Gas: (Downstream of Contact Tower)	Gas Flowrate(MMSCFD) Actual __50_____ Design __50_____ Water Content __5____ lb/MMSCF		
Lean Glycol:	Circulation rate (gpm) Actual[3] __5__ Maximum[4] __7.5__ Pump make/model: Kimray – model 45015PV		
Glycol Flash Tank (if applicable):	Temp.: __130____ °F Pressure __35_____ psig Vented? Yes ☐ No ☒ If no, describe vapor control: Gas routed to boiler or flare		
Stripping Gas (if applicable):	Source of gas:	Rate _____ scfm	

Please attach the following required dehydration unit information:

1. System map indicating the chain of custody information. See Page 43 of this document for an example of a gas flow schematic. It is not intended that the applicant provide this level of detail for all sources. The level of detail that is necessary is to establish where the custody transfer points are located. This can be accomplished by submitting a process flow diagram indicating custody transfer points and the natural gas flow. However, the DAQ reserves the right to request more detailed information in order to make the necessary decisions.
2. Extended gas analysis from the Wet Gas Stream including mole percents of C_1-C_8, benzene, ethylbenzene, toluene, xylene and n-Hexane, using Gas Processors Association (GPA) 2286 (or similar). A sample should be taken from the inlet gas line, downstream from any inlet separator, and using a manifold to remove entrained liquids from the sample and a probe to collect the sample from the center of the gas line. GPA standard 2166 reference method or a modified version of EPA Method TO-14, (or similar) should be used.
3. GRI-GLYCalc Ver. 3.0 aggregate report based on maximum Lean Glycol circulation rate and maximum throughput.
4. Detailed calculations of gas or hydrocarbon flow rate.

Section C: Facility NESHAPS Subpart HH/HHH status

Affected facility status: (choose only one)	☐ Subject to Subpart HH	
	☐ Subject to Subpart HHH	
	☒ Not Subject because:	☒ < 10/25 TPY
		☐ Affected facility exclusively handles black oil
		☐ The facility wide actual annual average NG throughput is < 650 thousand scf/day and facility wide actual annual average hydrocarbon liquid is < 250 bpd
		☐ No affected source is present

Flare System Control Device Sheet

IMPORTANT: READ THE INSTRUCTIONS ACCOMPANYING THIS FORM BEFORE COMPLETING.

General Information

1) Control Device ID#: FLR-1	2) Installation Date: ☒ New
3) Maximum Flare Rated Capacity: 6.0 MMBtu/hr	4) Maximum Pilot Rated Capacity: 0.088 MMBtu/hr

5) Emission Unit Information

List the emission units whose emissions are controlled by this flare:
(Emission Point ID#: _____)

Emission Unit ID#	Emission Source Description	Installation Date
DEHY-1	Glycol Dehydrator	☒ NEW
		☐ NEW
		☐ NEW
		☐ NEW
		☐ NEW

If this flare controls emissions from more than five emission units, please attach additional pages.

6) Stack Information ☐ N/A

Flare Height	Tip Diameter	Stack Discharge	Assist Type	Exit Velocity of Gas	Heat Content of Waste Gas + Any Auxiliary Fuel
20 ft	3 ft	☐ Horizontal ☒ Vertical ☐ Vertical with Rain cap	☐ Steam ☐ Air ☐ Pressure ☒ Non	22.8 ft/s	1,000 Btu /scf

7) Flare Fuel Information

Type/Grade of Fuel Combusted	Maximum Fuel Capacity (include units)	Heat Content (include units)	Fuel Contents	Requested Operating Limitation (include units)
Waste Gas	2,850 scf/hr	1,160 BTU/scf	% Sulfur: 0 % Ash: 0	8760 hours

8) Pilot Fuel Information

Type/Grade of Fuel Combusted	Maximum Fuel Capacity (include units)	Heat Content (include units)	Fuel Contents	Requested Operating Limitation (include units)
Pipeline Gas	88 scf/hr	1000 BTU/scf	% Sulfur: 0 % Ash: 0	8760 hours

If either the Flare or Pilot will combust more than one type of fuel, attach additional information.

Flare System Control Device Sheet (continued)

9) Control Information

Pollutant(s) Controlled	% Control Efficiency	Pollutant(s) Controlled	% Control Efficiency
VOC	98		
HAPS	98		

If additional pollutants are being controlled, attach additional information.

10) Emission Calculations Attached? ☒ **YES** ☐ **NO**

Please attach a copy of all emission calculations.

11) Additional Information Attached? ☒ **YES** ☐ **NO**

Please attach a copy of flare manufacturer's data sheet.

If any of the requested information is not available, please contact the flare manufacturer.

Flares meeting the requirements of G35-A Section 10 and registered under General Permit G35-A are considered federally enforceable.

ProMax Inlet to station Esitmate

	Mol %
Nitrogen	0.518937
Methane	85.38368
CO2	0.188522
Ethane	11.84391
Propane	1.786184
Isobutane	0.105015
n-Butane	0.139431
Isopentane	0.014117
n-Pentane	0.010419
n-Hexane	0.000873
Methylcyclopentane	0
Benzene	0
Cyclohexane	0
n-Heptane	0
n-Octane	0
n-Nonane	5.79E-07
n-Decane	9.78E-08
n-Undecane	9.63E-09
Dodecane	0
Water	0.000761
Triethylene Glycol	0
Oxygen	0.006325
Argon	0
Carbon Monoxide	0
Cyclopentane	4.05E-05
Isohexane	0.000881
3-Methylpentane	0.000498
Neohexane	0.000157
2,3-Dimethylbutane	0.000203
Methylcyclohexane	4.33E-05
Isooctane	2.51E-06
Decane, 2-Methyl-	0
Toluene	0
m-Xylene	0

MSES consultants, inc.

CORROSION PRODUCTS DIVISION

Gas Corrosion Analysis

Consol Energy

PO Drawer 190 - Clarksburg, WV 26302-0190
Telephone: 304.624.9700 - Fax: 304.622.0981
Website: www.msesinc.com/analysis

Analysis No:	1
Analysis Date:	7/10/2014
MSES Project No.:	14-043

SAMPLE COLLECTION INFORMATION

Client:	Consol Energy	Sample Date:	7/9/2014
Sample Location:	Oxford	Sample Time:	9:50 PM
Sample Collection Source:	Inlet	Collected By:	MFM
MSES Sample Number:	N/A	Sample Pressure:	250.0
Date Received at Lab:	7/9/2014	Sample Temp. (°F):	N/A
Collection Remark:	None	Sample Container Type:	Cylinder
		MSES/CPD ID#	115
		Client ID #:	N/A

ANALYSIS REPORT

COMPONENTS	UNITS	ANALYTICAL METHODS	RESULTS
H_2S HYDROGEN SULFIDE	PPMV	ASDTM D5504-08	<0.1
O_2 OXYGEN	Mole %	GPA 2261-00	0.0055
CO_2 CARBON DIOXIDE	Mole %	GPA 2261-00	0.1889

ANALYTICAL METHODS AND VALUES

(1) Fractional analysis and reporting performed following procedures outlined in GPA 2261-00: Analysis for Natural Gas and Similar Gaseous Mixtures By Gas Chromatography

(2) Physical properties and values used in calculations were acquired from GPA 2145-09: Table of Physical properties for Hydrocarbons and Other Compounds of Interest to the Natural Gas Industry

(3) Sulfur Compounds Analysis and Reporting Performed by Gas Chromatography using a Sulfur Chemiluminescence Detector Following Procedures Outlined by ASTM Method D5504-08

MSES consultants, inc.

CORROSION PRODUCTS DIVISION

Fractional Analysis

Consol Energy

PO Drawer 190 - Clarksburg, WV 26302-0190
Telephone: 304.624.9700 - Fax: 304.622.0981
Website: www.msesinc.com/analysis

Analysis No:	1
Analysis Date:	7/10/2014
MSES Project No.:	14-043

SAMPLE COLLECTION INFORMATION

Client:	Consol Energy	Sample Date:	7/9/2014
Sample Location:	Oxford	Sample Time:	9:50 AM
Sample Collection Source:	Inlet	Collected By:	MFM
MSES Sample Number:	CE-1-7-9-14	Sample Pressure:	250.0
Date Received at Lab:	7/9/2014	Sample Temp. (°F):	N/A
Collection Remark:	N/A	Sample Container Type:	Cylinder
		MSES/CPD ID#	115
		Client ID #:	N/A

ANALYSIS REPORT

FRACTIONAL ANALYSIS

COMPONENTS	MOLE PERCENT	GPM
METHANE	76.0977	
ETHANE	14.9153	3.98
PROPANE	4.8556	1.33
I-BUTANE	0.6609	0.22
N-BUTANE	1.3067	0.41
I-PENTANE	0.3557	0.13
N-PENTANE	0.3555	0.13
NITROGEN	0.4433	
CARBON DIOXIDE	0.1889	
OXYGEN	0.0055	
HEXANES (PLUS)	0.8148	0.35
TOTAL	100.0000	

ANALYTICAL RESULTS AT BASE CONDITIONS (CALCULATED VALUES)

BTU/SCF (DRY):	1294.07
BTU/SCF (SATURATED):	1272.03
PRESSURE (PSIA):	14.696
TEMPERATURE (°F)	60.00
Z FACTOR (DRY):	0.9962
Z FACTOR (SATURATED):	0.9958
ETHANE + GPM	6.5778

SPECIFIC GRAVITIES (CALCULATED VALUES)

IDEAL GRAVITY	0.7409
REAL GRAVITY	0.7435

COMMENTS

ANALYTICAL METHODS AND VALUES

(1) Fractional analysis and reporting performed following procedures outlined in GPA 2261-00: Analysis for Natural Gas and Similar Gaseous Mixtures By Gas Chromatography

(2) Physical properties and values used in calculations were acquired from GPA 2145-09: Table of Physical properties for Hydrocarbons and Other Compounds of Interest to the Natural Gas Industry

MSES consultants, inc.

CORROSION PRODUCTS DIVISION

PO Drawer 190 - Clarksburg, WV 26302-0190
Telephone: 304.624.9700 - Fax: 304.622.0981
Website: www.msesinc.com/analysis

Extended Gas Analysis

Consol Energy

Analysis No:	1
Analysis Date:	7/10/2014
MSES Project No.:	14-043

SAMPLE COLLECTION INFORMATION

Client:	Consol Energy	Sample Date:	7/9/2014
Sample Location:	Oxford	Sample Time:	9:50 AM
Sample Collection Source:	Inlet	Collected By:	MFM
MSES Sample Number:	CE-1-7-9-14	Sample Pressure:	250.0
Date Received at Lab:	7/9/2014	Sample Temp. (°F):	N/A
Collection Remark:	N/A	Sample Container Type:	Cylinder
		MSES/CPD ID#	MSES 115
		Client ID #:	N/A

ANALYSIS REPORT

COMPONENTS	UNITS	ANALYTICAL METHODS	RESULTS
C_5H_{10} CYCLOPENTANE	Mole %	GPA 2186	0.0021
C_6H_{12} CYCLOHEXANE	Mole %	GPA 2186	<0.0001
C_6H_{14} n-HEXANE	Mole %	GPA 2186	0.1478
C_6H_{14} 2 METHYLPENTANE (isohexane)	Mole %	GPA 2186	0.1034
C_6H_{14} 3 METHYLPENTANE	Mole %	GPA 2186	0.0657
C_6H_{14} 2,2 DIMETHYLBUTANE (neohexane)	Mole %	GPA 2186	0.0107
C_6H_{14} 2,3 DIMETHYLBUTANE	Mole %	GPA 2186	0.0200
C_7H_{14} METHYLCYCLOHEXANE	Mole %	GPA 2186	0.0187
C_7H_{16} n-HEPTANE	Mole %	GPA 2186	0.0999
C_8H_{18} n-OCTANE	Mole %	GPA 2186	0.0951
C_8H_{18} 2,2,4 TRIMETHYLPENTANE (isooctane)	Mole %	GPA 2186	0.0011
C_9H_{20} n-NONANE	Mole %	GPA 2186	0.0060
$C_{10}H_{22}$ n-DECANE	Mole %	GPA 2186	0.0029
$C_{11}H_{24}$ UNDECANE	Mole %	GPA 2186	0.0012
$C_{12}H_{26}$ DODECANE	Mole %	GPA 2186	<0.0001
$C_{13}H_{28}$ TRIDECANE	Mole %	GPA 2186	<0.0001
$C_{14}H_{30}$ TETRADECANE	Mole %	GPA 2186	<0.0001

ANALYTICAL METHODS AND VALUES

Gas Chromatography Analysis was performed following procedures outlined in GPA 2186-02

MSES consultants, inc.
CMSES consultants, inc. CHECMION PRODUCTS DIVISION

PO Drawer 190 - Clarksburg, WV 26302-0190
Telephone: 304.624.9700 - Fax: 304.622.0981
Website: www.msesinc.com/analysis

Aromatic Hydrocarbon Analysis

Consol Energy

Analysis No:	1
Analysis Date:	7/9/2014
MSES Project No.:	14-043

SAMPLE COLLECTION INFORMATION

Client:	Consol Energy	Sample Date:	7/9/2014
Sample Location:	Oxford	Sample Time:	9:50 AM
Sample Collection Source:	Inlet	Collected By:	MFM
MSES Sample Number:	N/A	Sample Pressure:	250.0
Date Received at Lab:	7/9/2014	Sample Temp. (°F):	N/A
Collection Remark:	None	Sample Container Type:	Cylinder
		MSES/CPD ID#	115
		Client ID #:	N/A

ANALYSIS REPORT

COMPONENTS	UNITS	ANALYTICAL METHODS	RESULTS
C_6H_6 BENZENE	ppmV	GPA 2286-95	<0.1
C_7H_8 TOLUENE	ppmV	GPA 2286-95	6.0
C_8H_{10} ETHYLBENZENE	ppmV	GPA 2286-95	<0.1
C_8H_{10} XYLENE	ppmV	GPA 2286-95	1.9

ANALYTICAL METHODS AND VALUES

(1) Gas chromatography analysis was performed and results calculated following procedures outlined in GPA 2286-95: Tentative Method of Extended Analysis for Natural Gas and Similar Gaseous Mixtures by Temperature Programmed Gas Chromatography

(2) Gas sampling was performed following procedures outlined in GPA 2166-05: Obtaining Natural Gas Samples for Analysis by Gas Chromatography

(3) Limit of Detection = 0.1 ppmV

MSES consultants, inc.
CORROSION PRODUCTS DIVISION

PO Drawer 190 - Clarksburg, WV 26302-0190
Telephone: 304.624.9700 - Fax: 304.622.0981
Website: www.msesinc.com/analysis

Sulfur Compounds Analysis

Consol Energy

Analysis No:	1
Analysis Date:	7/10/2014
MSES Project No.:	14-043

SAMPLE COLLECTION INFORMATION

Client:	Consol Energy	Sample Date:	7/9/2014
Sample Location:	Oxford	Sample Time:	9:50 AM
Sample Collection Source:	Inlet	Collected By:	MFM
MSES Sample Number:	CE-1-7-9-14	Sample Pressure:	250.0
Date Received at Lab:	7/9/2014	Sample Temp. (°F):	N/A
Collection Remark:	None	Sample Container Type:	Cylinder
		MSES/CPD ID#	115
		Client ID #:	N/A

ANALYSIS REPORT

COMPONENTS	UNITS	ANALYTICAL METHODS	RESULTS
H_2S HYDROGEN SULFIDE	PPMV	ASTM D-5504	<0.1
COS CARBONYL SULFIDE	PPMV	ASTM D-5504	<0.1
CS_2 CARBON DISULFIDE	PPMV	ASTM D-5504	<0.1
SO_2 SULFUR DIOXIDE	PPMV	ASTM D-5504	<0.1
CH_4S METHYL MERCAPITAN	PPMV	ASTM D-5504	<0.1
C_2H_6S ETHYL MERCAPITAN	PPMV	ASTM D-5504	<0.1
$(CH_3)_2S$ DIMETHYL SULFIDE	PPMV	ASTM D-5504	<0.1
$(CH_3)_3CSH$ *tert*-BUTYL MERCAPTAN	PPMV	ASTM D-5504	<0.1
$C_2H_5SCH_3$ ETHYL METHYL SULFIDE	PPMV	ASTM D-5504	<0.1
TOTAL SULFUR COMPOUNDS	PPMV	ASTM D-5504	<0.1

ANALYTICAL METHODS AND VALUES

(1) Sulfur Compounds Analysis and Reporting Performed by Gas Chromatography using a Sulfur Chemiluminescence Detector Following Procedures Outlined by ASTM Method D5504-08

(2) Gas sampling was performed following procedures outlined in GPA 2166-05: Obtaining Natural Gas Samples for Analysis by Gas Chromatography

(3) Limit of Detection = 0.1 ppmV

Draft AIR QUALITY PERMIT NOTICE
Notice of Application

Notice is given that Cone Gathering, LLC has applied to the West Virginia Department of Environmental Protection, Division of Air Quality, for a Class II Rule to construct a new natural gas compressor station (the Oxford Compressor Station) located near the Town of West Union, in Doddridge County, West Virginia. The site latitude and longitude coordinates are: 39.242516 N, -80.820745 W.

The station will consist of one (1) triethylene glycol (TEG) dehydration unit rated at 50 million standard cubic feet per day (MMscfd) with an associated reboiler (rated at 1.0 MMBtu/hr) and controlled by an enclosed flare (rated at 6.0 MMbtu/hr), as well as one storage tank.

The applicant estimates the potential increase in the following Regulated Air Pollutants associated with the project after the installation of the proposed equipment:

Pollutant	Potential Emissions (tons per year)
NOx	0.88
CO	0.49
VOC	6.01
SO_2	0.01
PM/PM_{10}	0.006
Formaldehyde	0.003
HAPs	0.110
CO2e	690.65

Startup of operation is planned to begin as soon as the permit is approved. Written comments will be received by the West Virginia Department of Environmental Protection, Division of Air Quality, 601 57th Street, SE, Charleston, WV 25304, for at least 30 calendar days from the date of publication of this notice.

Any questions regarding this permit application should be directed to the DAQ at (304) 926-0499, extension 1227, during normal business hours.

Dated this the 2nd day of September, 2014.

By: CONE Gathering LLC.
David Morris
1000 CONSOL Energy Drive
Canonsburg, PA 15317