Ed
13-2914C
017-00034

MARKWEST
Energy Partners, L.P.

MarkWest Energy Appalachia, L.L.C.
1515 Arapahoe Street
Tower 1, Suite 1600
Denver, CO 80202-2137
(800) 730-8388
(303) 290-8700
(303) 825-0920 Fax

RECEIVED
DEC 11 2014
WV DEP / DIV. OF AIR QUALITY

December 10, 2014

Mr. Fred Durham, Director
West Virginia Department of Environmental Protection
Division of Air Quality
Charleston, WV 25304

Re: MarkWest Liberty Midstream & Resources L.L.C.
Sherwood Gas Plant
Application for NSR (45CSR13) Permit (R13-2914)

Dear Mr. Durham:

MarkWest Liberty Midstream & Resources L.L.C. (MarkWest) submits the enclosed application for a New Source Review (NSR) permit in accordance with the West Virginia Air Pollution Control Act and Title 45 Series 13 (45CSR13) for the proposed Sherwood Gas Plant expansion in Doddridge County.

This package contains the required application forms, emissions calculations and supporting documentation for the referenced project. A check in the amount of $2,000 for the application fee is included with this submittal. The public notice for the proposed construction will be published in the *Herald Record*. MarkWest will forward the Affidavit of Publication to your attention once it is received from the publisher.

MarkWest has previously been authorized to build Sherwood I, II, III, IV, V, and VI plants. MarkWest is requesting the following revisions be made as part of this application to the existing permit (R13-2914B):

- The addition of three cryogenic plants, referred to as Sherwood VII, VIII, and IX each permitted to handle a maximum gas stream of 230 mmscfd;
- The addition of a DeEthanization plant;
- Removal and replacement of the current plant flare;
- Modification of fugitive component counts to reflect the new processes. Additionally, the fugitive component leak factors for valves in gas and liquid service, for connector and pump seals have been modified in accordance with

the AP-42 guidance to reflect that the facility is subject to NSPS Subpart OOOO requirements for Leak Detection and Reporting (LDAR) and thus a lower average emission leak rate from those facilities without an LDAR program;

- The addition of two small stabilization units with heaters that are each de minimis but are included in this application for the facility-wide totals.

If you have any questions or comments, please call me (303) 542-0686 or e-mail nwheldon@markwest.com at your earliest convenience.

Sincerely,

Nathan M. Wheldon, P.E.
Environmental Manager
Enclosures (Original + Two Copies)

11
U

MARKWEST

2100

INVOICE DATE	INVOICE NUMBER	DESCRIPTION	GROSS AMOUNT	DISCOUNT	NET AMOUNT
25-NOV-14	112514200000	PERMIT APP FEE FOR SHERWOOD GAS PLANT	2,000.00	0.00	2,000.00
COMPANY REF: MarkWest Liberty Midstream and Resources,				**NET TOTAL**	**$2,000.00**

▼ REMOVE DOCUMENT ALONG THIS PERFORATION ▼

MARKWEST

Markwest Liberty Midstream & Resources LLC
1515 Arapahoe Street, Tower 1, Suite 1600
Denver, CO 80202-2126
Phone: 1-800-730-8388

JP Morgan Chase Bank, N.A.
340 S Cleveland Ave
Columbus, OH 43271

56-1544/441

No. **002100**

CHECK NUMBER	DATE	PAY EXACTLY
002100	**04-DEC-14**	**$******2,000.00**

Pay Two Thousand Dollars And Zero Cents*****

Pay To The Order Of
West Virginia Department of Environmental Protection
601 57th Street Se
Charleston, WV

Josh Hall
AUTHORIZED SIGNATURE

DOCUMENT CONTAINS BLUE PANTOGRAPH & MICROPRINTING. BACK HAS THERMOCHROMIC INK & A WATERMARK. HOLD AT AN ANGLE TO VIEW. VOID IF NOT PRESENT

⑈002100⑈ ⑆041115443⑆ 486346146⑈

PSEPRZ-B

47277

Markwest Liberty Midstream & Resources LLC
1515 Arapahoe Street, Tower 1, Suite 1600
Denver, CO 80202-2126

RECEIVED
DEC 11 2014
WV DEP / DIV OF AIR QUALITY

SEE OTHER SIDE FOR OPENING INSTRUCTIONS

West Virginia Department of Environmental Protection
601 57th Street Se
Charleston, WV 25304

SEE OTHER SIDE FOR OPENING INSTRUCTIONS

MARKWEST LIBERTY MIDSTREAM & RESOURCES L.L.C.

SHERWOOD GAS PLANT

45CSR13 NSR APPLICATION

SUBMITTED TO WVDEP DIVISION OF AIR QUALITY
November 2014

TABLE OF CONTENTS

TABLE OF CONTENTS i

INTRODUCTION ii

Project Description ii

Proposed Emissions iii

WVDEP APPLICATION FOR NSR PERMIT 1

APPLICATION CHECKLIST 2

ATTACHMENT C: INSTALLATION/START-UP SCHEDULE ..... D

ATTACHMENT D: REGULATORY DISCUSSION ..... D

ATTACHMENT G: PROCESS DESCRIPTION ..... F

ATTACHMENT I: EMISSION UNITS TABLE I

ATTACHMENT J: EMISSION POINTS DATA SUMMARY SHEET ..... J

ATTACHMENT K: FUGITIVE EMISSIONS DATA SUMMARY SHEET ..... K

ATTACHMENT L: EMISSION UNIT DATA SHEETS L

ATTACHMENT M: AIR POLLUTION CONTROL SHEET ..... M

ATTACHMENT N: SUPPORTING EMISSIONS CALCULATIONS ..... N

ATTACHMENT O: MONITORING/RECORDKEEPING/REPORTING/TESTING PLANS ..... O

ATTACHMENT P: PUBLIC NOTICE ..... P

ATTACHMENT Q: CLAIMS OF CONFIDENTIALITY ..... Q

ATTACHMENT R: AUTHORITY FORMS ..... R

APPLICATION FEE S

APPENDIX A: SUPPORT DOCUMENTS 1

Heater Specification Sheets 1

INTRODUCTION

MarkWest Liberty Midstream & Resources L.L.C. requests authorization to make an expansion to the Sherwood Gas Plant (R13-2914), by applying for an Administrative Amendment II in accordance with the West Virginia Air Pollution Control Act and Title 45 Series 13 (45CSR13).

Project Description

The Sherwood facility is comprised of a number of cryogenic gas plants, each with a nameplate capacity for processing natural gas of 200 mmscf/d but with a maximum capacity of up to 230 mmscf/d of natural gas. This expansion includes three additional processing plants each with the ability to process maximum of 230 mmscf/d of natural gas for a total of nine plants and normal rate of 1,800 mmscf/d and a maximum rate 2,070 mmscf/d throughout the facility. Three new regenerative heaters, identical to the 18.00-mmbtu/hr heaters at Sherwood IV, V and VI will be installed with an additional 6.60 mmbtu/hr HMO heater identical to H-6712 at Sherwood VI. Two stabilization heaters (2.28 mmbtu/hr) will be installed to stabilize produced liquids throughout the facility. A Deethanization plant will be installed to separate methane as a purity product for sales into an ethane pipeline. A new flare will be installed to replace the existing flare at the facility. Fugitive emission component counts have increased with the addition of the plants, noting that the Deethanizer is not in VOC service. The fugitive emission leak rate has decreased for valves, connectors and pump seals as the facility is subject to the Leak Detection and Reporting (LDAR) requirements of NSPS Subpart OOOO. The protocol in AP-42 has been followed which reduces the leak rate based on the frequency and fixable leak rate requirements of the LDAR program compared to those facilities without a LDAR program. The facility is subject to the NSPS Subpart OOOO requirements for leak detection throughout. MarkWest continues to use air driven pneumatics and the potential for emissions for storage tanks remains under 6 tpy; therefore, portions of the subpart will not be applicable to this facility.

With the exception of the replacement flare, equipment from the current Sherwood facility will remain as presently constituted.

Proposed Emissions

Emissions calculations for the project are presented in Attachment N. With the addition of these new plants the facility-wide emissions will exceed Title V thresholds for NOx and GHGs but will remain below Title V thresholds for all other pollutants. All emissions are below the thresholds for Prevention of Significant Deterioration (PSD) analysis. Summaries of the total facility-wide emissions are presented for criteria pollutants and hazardous air pollutants (HAPs). Detailed emission calculations are also included for the new units.

Note that additional storage tanks may be present on site (i.e., methanol, lube oil, waste oil) but are considered de minimis sources per Table 45-13B and are not addressed further in this application. Natural gas liquids are stored in pressurized storage vessels to keep the product in liquid form prior to transfer from the facility, these storage vessels have no potential emissions because of the pressure on the vessel.

WVDEP APPLICATION FOR NSR PERMIT

WEST VIRGINIA DEPARTMENT OF
ENVIRONMENTAL PROTECTION
DIVISION OF AIR QUALITY
601 57th Street, SE
Charleston, WV 25304
(304) 926-0475
www.dep.wv.gov/daq

APPLICATION FOR NSR PERMIT AND TITLE V PERMIT REVISION (OPTIONAL)

PLEASE CHECK ALL THAT APPLY TO **NSR (45CSR13)** (IF KNOWN):

☐ **CONSTRUCTION** ☒ **MODIFICATION** ☐ **RELOCATION**
☐ **CLASS I ADMINISTRATIVE UPDATE** ☐ **TEMPORARY**
☐ **CLASS II ADMINISTRATIVE UPDATE** ☐ **AFTER-THE-FACT**

PLEASE CHECK TYPE OF **45CSR30 (TITLE V)** REVISION (IF ANY):

☐ **ADMINISTRATIVE AMENDMENT** ☐ **MINOR MODIFICATION**
☐ **SIGNIFICANT MODIFICATION**

IF ANY BOX ABOVE IS CHECKED, INCLUDE TITLE V REVISION INFORMATION AS **ATTACHMENT S** TO THIS APPLICATION

FOR TITLE V FACILITIES ONLY: Please refer to "Title V Revision Guidance" in order to determine your Title V Revision options (Appendix A, "Title V Permit Revision Flowchart") and ability to operate with the changes requested in this Permit Application.

Section I. General

1. Name of applicant *(as registered with the WV Secretary of State's Office)*:
MarkWest Liberty Midstream & Resources L.L.C.

2. Federal Employer ID No. ***(FEIN)***:
300528059

3. Name of facility *(if different from above)*:
Sherwood Gas Plant

4. The applicant is the:
☐ **OWNER** ☐ **OPERATOR** ☒ **BOTH**

5A. Applicant's mailing address:
1515 Arapahoe St., Tower 1, Suite 1600
Denver, CO 80202-2137

5B. Facility's present physical address:
218 Swisher Lane
West Union, WV 26456

6. **West Virginia Business Registration.** Is the applicant a resident of the State of West Virginia? ☐ **YES** ☒ **NO**
- If **YES,** provide a copy of the **Certificate of Incorporation/Organization/Limited Partnership** (one page) including any name change amendments or other Business Registration Certificate as **Attachment A.**
- If **NO,** provide a copy of the **Certificate of Authority/Authority of L.L.C./Registration** (one page) including any name change amendments or other Business Certificate as **Attachment A.**

7. If applicant is a subsidiary corporation, please provide the name of parent corporation:

8. Does the applicant own, lease, have an option to buy or otherwise have control of the *proposed site?* ☒ **YES** ☐ **NO**
- If **YES,** please explain: **Applicant has purchased this property.**
- If **NO,** you are not eligible for a permit for this source.

9. Type of plant or facility (stationary source) to be **constructed, modified, relocated, administratively updated** or **temporarily permitted** (e.g., coal preparation plant, primary crusher, etc.):
Natural gas processing plant

10. North American Industry Classification System **(NAICS)** code for the facility:
211112

11A. DAQ Plant ID No. (for existing facilities only):
017-00034

11B. List all current 45CSR13 and 45CSR30 (Title V) permit numbers associated with this process (for existing facilities only):
R13-2914

All of the required forms and additional information can be found under the Permitting Section of DAQ's website, or requested by phone.

RECEIVED
DEC 11 2014
WV DEP / DIV. OF AIR QUALITY

12A.

- For **Modifications, Administrative Updates** or **Temporary permits** at an existing facility, please provide directions to the *present location* of the facility from the nearest state road;
- For **Construction** or **Relocation permits,** please provide directions to the *proposed new site location* from the nearest state road. Include a **MAP** as **Attachment B.**
  - **From Smithburg: Take US-50 East and go 2.8 miles.**
  - **Turn right at Co. Route 50/35 and go 0.1 miles.**
  - **Take the 1st right onto Blacklick Rd/Co Route 15/Sherwood-Greenbrier Rd and continue 0.4 miles.**
  - **Site will be 0.5 miles west of Co Route 15.**

12.B. New site address (if applicable):	12C. Nearest city or town:	12D. County:
218 Swisher Lane, West Union, WV 26456	**Smithburg**	**Doddridge**
12.E. UTM Northing (KM): **4346.885**	12F. UTM Easting (KM): **526.921**	12G. UTM Zone: **17S**

13. Briefly describe the proposed change(s) at the facility:
Construction of three new natural gas processing plants with one (1) 7.86 mmbtu/hr regenerative heater each, one HMO heater and associated fugitive emissions. Two small stabilizers with heaters and a Deethanization process.

14A. Provide the date of anticipated installation or change:	14B. Date of anticipated Start-Up if a permit is granted:
July 2015 for S7 plant, Nov 2015 for S8, Jan 2016 for S9. DeEthanizer May 2015 – If this is an **After-The-Fact** permit application, provide the date upon which the proposed change did happen: / /	**July 2015 for S7 plant** **Nov 2015 for S8 plant** **Jan 2016 for S9** **May 2015 for DeEth**

14C. Provide a **Schedule** of the planned **Installation** of/**Change** to and **Start-Up** of each of the units proposed in this permit application as **Attachment C** (if more than one unit is involved).

15. Provide maximum projected **Operating Schedule** of activity/activities outlined in this application:
Hours Per Day **24** Days Per Week **7** Weeks Per Year **52**

16. Is demolition or physical renovation at an existing facility involved? ☐ **YES** ☒ **NO**

17. **Risk Management Plans.** If this facility is subject to 112(r) of the 1990 CAAA, or will become subject due to proposed changes (for applicability help see www.epa.gov/ceppo), submit your **Risk Management Plan (RMP)** to U. S. EPA Region III.

18. **Regulatory Discussion.** List all Federal and State air pollution control regulations that you believe are applicable to the proposed process *(if known)*. A list of possible applicable requirements is also included in Attachment S of this application (Title V Permit Revision Information). Discuss applicability and proposed demonstration(s) of compliance *(if known)*. Provide this information as **Attachment D.**

Section II. Additional attachments and supporting documents.

19. Include a check payable to WVDEP – Division of Air Quality with the appropriate **application fee** (per 45CSR22 and 45CSR13).

20. Include a **Table of Contents** as the first page of your application package.

21. Provide a **Plot Plan,** e.g. scaled map(s) and/or sketch(es) showing the location of the property on which the stationary source(s) is or is to be located as **Attachment E** (Refer to ***Plot Plan Guidance***) .
– Indicate the location of the nearest occupied structure (e.g. church, school, business, residence).

22. Provide a **Detailed Process Flow Diagram(s)** showing each proposed or modified emissions unit, emission point and control device as **Attachment F.**

23. Provide a **Process Description** as **Attachment G.**
– Also describe and quantify to the extent possible all changes made to the facility since the last permit review (if applicable).

All of the required forms and additional information can be found under the Permitting Section of DAQ's website, or requested by phone.

24. Provide **Material Safety Data Sheets (MSDS)** for all materials processed, used or produced as **Attachment H.**
– For chemical processes, provide a MSDS for each compound emitted to the air.

25. Fill out the **Emission Units Table** and provide it as **Attachment I.**

26. Fill out the **Emission Points Data Summary Sheet (Table 1 and Table 2)** and provide it as **Attachment J.**

27. Fill out the **Fugitive Emissions Data Summary Sheet** and provide it as **Attachment K.**

28. Check all applicable **Emissions Unit Data Sheets** listed below:

☐ Bulk Liquid Transfer Operations
☐ Chemical Processes
☐ Concrete Batch Plant
☐ Grey Iron and Steel Foundry
☐ Haul Road Emissions
☐ Hot Mix Asphalt Plant
☐ Incinerator
☐ Indirect Heat Exchanger
☐ Quarry
☐ Solid Materials Sizing, Handling and Storage Facilities
☐ Storage Tanks
☒ General Emission Unit, specify: **Natural gas-fired heaters**

Fill out and provide the **Emissions Unit Data Sheet(s)** as **Attachment L.**

29. Check all applicable **Air Pollution Control Device Sheets** listed below:

☐ Absorption Systems
☐ Adsorption Systems
☐ Afterburner
☐ Baghouse
☐ Condenser
☐ Electrostatic Precipitator
☐ Flare
☐ Mechanical Collector
☐ Wet Collecting System
☐ Other Collectors, specify Fill out and provide the **Air Pollution Control Device Sheet(s)** as **Attachment M.**

30. Provide all **Supporting Emissions Calculations** as **Attachment N,** or attach the calculations directly to the forms listed in Items 28 through 31.

31. **Monitoring, Recordkeeping, Reporting and Testing Plans.** Attach proposed monitoring, recordkeeping, reporting and testing plans in order to demonstrate compliance with the proposed emissions limits and operating parameters in this permit application. Provide this information as **Attachment O.**

➢ Please be aware that all permits must be practically enforceable whether or not the applicant chooses to propose such measures. Additionally, the DAQ may not be able to accept all measures proposed by the applicant. If none of these plans are proposed by the applicant, DAQ will develop such plans and include them in the permit.

32. **Public Notice.** At the time that the application is submitted, place a **Class I Legal Advertisement** in a newspaper of general circulation in the area where the source is or will be located (See 45CSR§13-8.3 through 45CSR§13-8.5 and ***Example Legal Advertisement*** for details). Please submit the **Affidavit of Publication** as **Attachment P** immediately upon receipt.

33. **Business Confidentiality Claims.** Does this application include confidential information (per 45CSR31)?

☐ **YES** ☒ **NO**

➢ If **YES,** identify each segment of information on each page that is submitted as confidential and provide justification for each segment claimed confidential, including the criteria under 45CSR§31-4.1, and in accordance with the DAQ's ***"Precautionary Notice – Claims of Confidentiality"*** guidance found in the ***General Instructions*** as **Attachment Q.**

Section III. Certification of Information

34. **Authority/Delegation of Authority.** Only required when someone other than the responsible official signs the application. Check applicable **Authority Form** below:

☐ Authority of Corporation or Other Business Entity
☐ Authority of Governmental Agency
☐ Authority of Partnership
☐ Authority of Limited Partnership

Submit completed and signed **Authority Form** as **Attachment R.**

All of the required forms and additional information can be found under the Permitting Section of DAQ's website, or requested by phone.

35A. **Certification of Information.** To certify this permit application, a Responsible Official (per 45CSR§13-2.22 and 45CSR§30-2.28) or Authorized Representative shall check the appropriate box and sign below.

Certification of Truth, Accuracy, and Completeness

I, the undersigned ☒ **Responsible Official** / ☐ **Authorized Representative,** hereby certify that all information contained in this application and any supporting documents appended hereto, is true, accurate, and complete based on information and belief after reasonable inquiry I further agree to assume responsibility for the construction, modification and/or relocation and operation of the stationary source described herein in accordance with this application and any amendments thereto, as well as the Department of Environmental Protection, Division of Air Quality permit issued in accordance with this application, along with all applicable rules and regulations of the West Virginia Division of Air Quality and W.Va. Code § 22-5-1 et seq. (State Air Pollution Control Act). If the business or agency changes its Responsible Official or Authorized Representative, the Director of the Division of Air Quality will be notified in writing within 30 days of the official change.

Compliance Certification

Except for requirements identified in the Title V Application for which compliance is not achieved, I, the undersigned hereby certify that, based on information and belief formed after reasonable inquiry, all air contaminant sources identified in this application are in compliance with all applicable requirements.

SIGNATURE _____ DATE: 12-2-14

(Please use blue ink) *(Please use blue ink)*

35B. Printed name of signee: **Leanne Meyer**		35C. Title: **Vice President EH&S**
35D. E-mail: **lmeyer@markwest.com**	36E. Phone: **(303) 925-9299**	36F. FAX: **303-290-8769**
36A. Printed name of contact person (if different from above): **Nathan Wheldon**		36B. Title: **Environmental Manager**
36C. E-mail: **nwheldon@markwest.com**	36D. Phone: **303-542-0686**	36E. FAX: **303-825-0920**

PLEASE CHECK ALL APPLICABLE ATTACHMENTS INCLUDED WITH THIS PERMIT APPLICATION:

- ☒ **Attachment A: Business Certificate**
- ☐ **Attachment B: Map(s)**
- ☒ **Attachment C: Installation and Start Up Schedule**
- ☒ **Attachment D: Regulatory Discussion**
- ☐ **Attachment E: Plot Plan**
- ☐ **Attachment F: Detailed Process Flow Diagram(s)**
- ☒ **Attachment G: Process Description**
- ☐ **Attachment H: Material Safety Data Sheets (MSDS)**
- ☒ **Attachment I: Emission Units Table**
- ☒ **Attachment J: Emission Points Data Summary Sheet**
- ☒ **Attachment K: Fugitive Emissions Data Summary Sheet**
- ☒ **Attachment L: Emissions Unit Data Sheet(s)**
- ☐ **Attachment M: Air Pollution Control Device Sheet(s)**
- ☒ **Attachment N: Supporting Emissions Calculations**
- ☐ **Attachment O: Monitoring/Recordkeeping/Reporting/Testing Plans**
- ☒ **Attachment P: Public Notice**
- ☐ **Attachment Q: Business Confidential Claims**
- ☐ **Attachment R: Authority Forms**
- ☐ **Attachment S: Title V Permit Revision Information**
- ☒ **Application Fee**

Please mail an original and three (3) copies of the complete permit application with the signature(s) to the DAQ, Permitting Section, at the address listed on the first page of this application. Please DO NOT fax permit applications.

FOR AGENCY USE ONLY – IF THIS IS A TITLE V SOURCE:

- ☐ ***Forward 1 copy of the application to the Title V Permitting Group and:***
- ☐ ***For Title V Administrative Amendments:***
  - ☐ ***NSR permit writer should notify Title V permit writer of draft permit,***
- ☐ ***For Title V Minor Modifications:***
  - ☐ ***Title V permit writer should send appropriate notification to EPA and affected states within 5 days of receipt,***
  - ☐ ***NSR permit writer should notify Title V permit writer of draft permit.***
- ☐ ***For Title V Significant Modifications processed in parallel with NSR Permit revision:***
  - ☐ ***NSR permit writer should notify a Title V permit writer of draft permit,***
  - ☐ ***Public notice should reference both 45CSR13 and Title V permits,***
  - ☐ ***EPA has 45 day review period of a draft permit.***

All of the required forms and additional information can be found under the Permitting Section of DAQ's website, or requested by phone.

RECEIVED
DEC 11 2014
WV DEP / DIV. OF AIR QUALITY

APPLICATION CHECKLIST

A complete application is demonstrated when all of the information required below is properly prepared, completed and attached. The items listed below are required information which must be submitted with a 45CSR13 permit application. Any submittal will be considered incomplete if the required information is not included. The applicant must submit a complete application in order to receive a 45CSR13 permit.	
☑	**Class I legal advertisement published in a newspaper certified to accept legal advertisements and original affidavit submitted.**
☑	**$1,000 application fee for construction, modification, relocation or temporary permit; $1,000 application fee for being subject to NSPS. Additional application fees:** • **$1,000 NSPS** • **$5,000 Major Modification** • **$2,500 NESHAP** • **$10,000 Major Construction** • **$2,500 45CSR27 Pollutant**
☑	**Original and three (3) copies of the application.**
☑	**File organization – application pages are numbered and in correct order, application is bound in some way, etc.**
☑	**Confidential Business Information is properly identified.**
☑	**General application forms signed by a responsible official.**
	Authority form – required if application is signed by someone other than a responsible official – one of the following: • **Authority of Corporation if application is not signed by the President or CEO;** • **Authority of Partnership if application is not signed by a general partner or proprietor;** • **Authority of Limited Partnership if application is not signed by general partner or proprietor; or** • **Authority of Governmental Agency if application is not signed by**

	principal elected officer or ranking elected official.
☑	**Copy of current Business Registration Certificate.**
☑	**Process description, including equipment and emission point identification numbers.**
☑	**Process flow diagram, including equipment and emission point identification numbers.**
☑	**Plot plan, including equipment and emission point identification numbers.**
☑	**Area map with directions and location marked.**
☑	**Applicable technical forms completed and submitted:** • **Emission Point Data Summary Sheets** • **Emission Unit Data sheets** • **Air Pollution Control Device Sheets** • **Equipment List Form**
☑	**Emission calculations – emission factors, references, source identification numbers, etc.**

ATTACHMENT C: INSTALLATION/START-UP SCHEDULE

MarkWest Liberty Midstream & Resources intends to commence earthmoving and construction activities for the proposed Sherwood Gas Plant in Winter 2014-2015

The final dates of installation and start-up of the proposed equipment are contingent upon the permit issuance and other factors. The currently planned starting dates are as follows: May 2015 – Deethanizer and replacement flare, July 2015 - Sherwood VII, November 2015 – Sherwood VIII, January 2016 Sherwood IX.

ATTACHMENT D: REGULATORY DISCUSSION

MarkWest Liberty Midstream & Resources L.L.C. has reviewed the regulatory provisions and offers the following discussion regarding applicability to the proposed construction.

STATE IMPLEMENTATION PLAN (SIP):
This application does not involve a stationary source to be located in a non-attainment area subject to a SIP.

FEDERAL IMPLEMENTATION PLAN:
No Federal Implementation Plan is in effect where this stationary source is proposed.

45 CSR 4 – OBJECTIONABLE ODORS:
Normal operations of the facility are not expected to generate objectionable odors.

45 CSR 13 - PERMITS FOR CONSTRUCTION, MODIFICATION, RELOCATION AND OPERATION OF STATIONARY SOURCES OF AIR POLLUTANTS, NOTIFICATION REQUIREMENTS, ADMINISTRATIVE UPDATES, TEMPORARY PERMITS, GENERAL PERMITS, AND PROCEDURES FOR EVALUATION:
Potential emissions associated with the proposed project are greater than the minor source construction permit thresholds of 6 pounds per hour (pph) AND 10 tons per year (tpy) of any regulated air pollutant OR 144 pounds per day (ppd) of any regulated air pollutant OR 2 pph OR 5 tpy of aggregated hazardous air pollutants (HAP) OR 45 CSR 27 toxic air pollutant (TAP) (10% increase if above BAT triggers or increase to Best Available Technology (BAT) triggers) OR subject to applicable Standard or Rule.

45 CSR 14 – PREVENTION OF SIGNIFICANT DETERIORATION (PSD):
The proposed facility will not be a major source subject to the provisions of the PSD rule.

45 CSR 19 – NONATTAINMENT NEW SOURCE REVIEW:
The proposed facility will not be located in a non-attainment area.

45 CSR 22 - AIR QUALITY MANAGEMENT FEE PROGRAM:
The facility will be required to maintain a valid Certificate to Operate on the premises.

45 CSR 28 – EMISSIONS TRADING AND BANKING:
The applicant for the facility does not voluntarily choose to participate in an emission reduction credit trading program.

45 CSR 30 - REQUIREMENTS FOR OPERATING PERMITS:
Emissions from the facility will exceed major source thresholds with the addition of the DeEthanizer; therefore, a Title V permit application will be submitted within 12 months of the start of the DeEthanizer.

45 CSR 30-2.6.1 – EMISSIONS CAP:
This facility will not be subject to any emissions caps as provided by this provision.

45 CSR 33 – ACID RAIN:
The facility will not be a source subject to the provision of the Acid Rain program.

FEDERAL

SECTION 112(d) MACT STANDARDS:
The facility will not be a major source of hazardous air pollutants and is not subject to the MACT provisions.

SECTION 112(g) CASE-BY-CASE MACT:
The facility will not be a major source of hazardous air pollutants and is not subject to the MACT provisions.

SECTION 112 (i) EARLY REDUCTION OF HAP:
The facility will not be a major source of hazardous air pollutants and is not subject to this provision.

SECTION 112(r) RISK MANAGEMENT PLAN (RMP):
It is anticipated that the facility will maintain hazardous substances in excess of 10,000 pounds and thus will be subject to this provision.

SECTION 129 STANDARDS/REQUIREMENTS:
Operation of this facility will not involve solid waste combustion or incineration; therefore, this standard does not apply.

SECTION 183 (e) CONSUMER/COMMERCIAL PRODUCT REQUIREMENTS:
Operation of this facility will not involve the manufacture or sale of consumer or commercial products and will not be subject to this regulatory provision.

SECTION 183 (f) TANK VESSEL REQUIREMENTS:
The facility will not employ marine tank vessels; therefore, this provision does not apply.

STRATOSPHERIC OZONE (TITLE VI):

This facility will not use Class I ozone-depleting substances (ODS) including chlorofluorocarbons (CFC) and Class II ODS, which are hydrochlorofluorocarbons (HCFC), so this provision does not apply.

40 CFR PART 60 SUBPART JJJJ - STANDARDS OF PERFORMANCE FOR STATIONARY SPARK IGNITION INTERNAL COMBUSTION ENGINES:

The existing natural gas-fired compressor engines are stationary spark ignition internal combustion engines manufactured after July 1, 2007 and are subject to this subpart.

40 CFR PART 60 SUBPART OOOO – STANDARDS OF PERFORMANCE FOR CRUDE OIL AND NATURAL GAS PRODUCTION, TRANSMISSION, AND DISTRIBUTION:

This subpart establishes emission standards and compliance schedules for the control of VOC emissions from affected facilities that commence construction, modification or reconstruction after August 23, 2011. As a natural gas processing plant constructed after the applicable date, the facility will be subject to requirements under this rule, as will the previously constructed plant. Storage tanks at the site will not be subject to this subpart because the emissions are less than 6 tpy per tank. Pneumatic controllers at the proposed facility will be air-driven devices to comply with the rule.

40 CFR PART 63 SUBPART ZZZZ - NATIONAL EMISSION STANDARDS FOR HAZARDOUS AIR POLLUTANTS FOR SOURCE CATEGORIES FROM STATIONARY RECIPROCATING INTERNAL COMBUSTION ENGINES:

The facility will be a minor (area) source of hazardous air pollutants (HAP). The proposed natural gas-fired engines are stationary reciprocating internal combustion engines (RICE) and will commence construction after the June 12, 2006 effective date for new stationary RICE at area sources and are therefore subject to this subpart. The engines will meet requirements by compliance with Subpart JJJJ. No further requirements apply for these engines under this subpart.

40 CFR PART 64 - COMPLIANCE ASSURANCE MONITORING:

The facility will be a major source but the newly requested equipment does not rely on control equipment to reduce the potential emissions; therefore, Part 64 does not apply.

TITLE V OPERATING PROGRAM:

The Sherwood Gas Plant will become a major source of emissions with installation of the DeEthanizer. A Title V permit application will be submitted within 12 months of starting the DeEthanizer.

ATTACHMENT G: PROCESS DESCRIPTION

Sherwood Gas Plant will be used as a processing plant and compressor station to process gas from the gas wells throughout West Virginia. A description of the facility process is as follows. High pressure natural gas enters the cryogenic plants and passes through a molecular sieve to remove excess water in the gas stream. The gas then enters the cryogenic plant, which lowers the temperature of the gas in order to separate ethane and heavier hydrocarbons (Y-grade) from methane gas. After this refrigeration the gas is ready to go to market and passes through outlet compression prior to entering the downstream pipeline to a distribution pipeline operated by a separate entity. Liquids removed from the gas stream will pass through the deethanization unit to separate ethane as a purity product from the remainder of the natural gas liquid stream. Purity ethane is distributed by pipeline. Natural gas liquids are sent to pressurized storage tanks prior to transfer via pipeline to a fractionation facility. Atmospheric storage tanks at the inlet compressor station will be controlled with a VRU to recover 98% of VOCs. Under normal operating conditions electric pumps will be utilized to transfer the removed saltwater and hydrocarbons from the atmospheric storage tanks to another site for further processing. In emergency conditions truck loading may occur; however, the loading will be done in a closed loop system into pressurized vehicles so any emissions would be de minimis in nature; therefore, the Bulk Liquid Transfer Operations Emissions Unit Data Sheet has not been included. An emergency flare currently exists to burn vapors released from the reboiler, pressure relief valves on the demethanizer, and refrigeration plant in the event of an emergency.

ATTACHMENT I: EMISSION UNITS TABLE

Attachment I

Emission Units Table

(includes all emission units and air pollution control devices that will be part of this permit application review, regardless of permitting status)

Emission Unit ID[1]	Emission Point ID[2]	Emission Unit Description	Year Installed/ Modified	Design Capacity	Type[3] and Date of Change	Control Device[4]
CM-1001	CM-1001	Caterpillar G3616 LE Engine	2012	4,735-hp	Existing	Oxid. Cat.
CM-1002	CM-1002	Caterpillar G3616 LE Engine	2012	4,735-hp	Existing	Oxid. Cat.
CM-2001	CM-2001	Caterpillar G3608 LE Engine	2012	2,370 – hp	Existing	Oxid. Cat.
H-711	H-711	Mole Sieve Regeneration Heater	2012	7.86 MMbtu/hr	Existing	None
H-771	H-771	Hot Oil Heater	2012	28.25 MMbtu/hr	Existing	None
DH-001	DH-001	TEG Dehydration Unit	2012	120 MMscfd	Existing	Flare
RB-001	RB-001	Dehydration Unit Reboiler	2012	2 MMbtu/hr	Existing	None
FL-991	FL-991	Emergency Flare	2012	68,600 scf/min	Modified	N/A
FUG-001	FUG-001	Fugitive Leaks	2012-2014	N/A	Modified	None
TNK-001	TNK-001	Storage Tank Flashing Emissions	2012	N/A	Existing	VRU
H-2711	H-2711	Mole Sieve Regeneration Heater	2013	7.86 MMbtu/hr	Existing	None
H-3711	H-3711	Mole Sieve Regeneration Heater	2013	7.86 MMbtu/hr	Existing	None
H-4711	H-4711	Mole Sieve Regeneration Heater	2014	18.00 MMbtu/hr	Existing	None
H-5711	H-5711	Mole Sieve Regeneration Heater	2014	18.00 MMbtu/hr	Existing	None
H-6711	H-6711	Mole Sieve Regeneration Heater	~2015	18.00 MMbtu/hr	Existing	None
H-4712	H-4712	Hot Oil Heater	2014	6.60 MMbtu/hr	Existing	None
H-6712	H-6712	Hot Oil Heater	~2015	6.60 MMbtu/hr	Existing	None
H-742	H-742	Stabilization Heater	~2014	2.28 MMbtu/hr	Existing	None
H-7711	H-7711	Mole Sieve Regeneration Heater	~2015	18.00 MMbtu/hr	New	None
H-8711	H-8711	Mole Sieve Regeneration Heater	~2015	18.00 MMbtu/hr	New	None
H-9711	H-9711	Mole Sieve Regeneration Heater	~2016	18.00 MMbtu/hr	New	None
H-8712	H-8712	Hot Oil Heater	~2015	6.60 MMbtu/hr	New	None

H-2742	H-2742	Stabilization Heater	~2015	2.28 MMbtu/hr	New	None
H-3742	H-3742	Stabilization Heater	~2015	2.28 MMbtu/hr	New	None
D1-H-782	D1-H-782	DeEthanizer HMO Heater	~2015	113.36 MMbtu/hr	New	None
D1-H-741	D1-H-741	DeEthanizer Regen Heater	~2015	12.23 MMbtu/hr	New	None

[1] For Emission Units (or Sources) use the following numbering system:1S, 2S, 3S,... or other appropriate designation.
[2] For Emission Points use the following numbering system:1E, 2E, 3E, ... or other appropriate designation.
[3] New, modification, removal
[4] For Control Devices use the following numbering system: 1C, 2C, 3C,... or other appropriate designation.

ATTACHMENT J: EMISSION POINTS DATA SUMMARY SHEET

Attachment J
EMISSION POINTS DATA SUMMARY SHEET

Table 1: Emissions Data

Emission Point ID No. *(Must match Emission Units Table & Plot Plan)*	Emission Point Type[1]	Emission Unit Vented Through This Point *(Must match Emission Units Table & Plot Plan)*		Air Pollution Control Device *(Must match Emission Units Table & Plot Plan)*		Vent Time for Emission Unit *(chemical processes only)*		All Regulated Pollutants - Chemical Name/CAS[3] *(Speciate VOCs & HAPS)*	Maximum Potential Uncontrolled Emissions[4]		Maximum Potential Controlled Emissions[5]		Emission Form or Phase *(At exit conditions, Solid, Liquid or Gas/Vapor)*	Est. Method Used[6]	Emission Concentration[7] (ppmv or mg/m^4)
		ID No.	Source	ID No.	Device Type	Short Term[2]	Max (hr/yr)		lb/hr	ton/yr	lb/hr	ton/yr			
CM-1001	Vert St Rain CP	Same	Same	N/A	Oxid. Cat.	N/A	N/A	NOx	5.22	22.86	5.22	22.86	Gas/Vapor	O (Manufacturer Data/AP-42)	
								CO	28.71	125.73	1.46	6.40			
								VOC	6.58	28.80	1.67	7.32			
								PM_{10}	<0.01	0.01	<0.01	0.01			
								PM Total	0.35	1.55	0.35	1.55			
								SO_2	0.02	0.09	0.02	0.09			
								Acetaldehyde	0.30	1.30	0.30	1.30			
								Acrolein	0.18	0.80	0.18	0.80			
								Benzene	0.02	0.07	0.02	0.07			
								Ethylbenzene	<0.01	0.01	<0.01	0.01			
								Formaldehyde	4.18	18.29	0.42	1.83			
								Methanol	0.09	0.39	0.09	0.39			
								Toluene	0.01	0.06	0.01	0.06			
								Xylenes	0.01	0.03	0.01	0.03			
CM-1002	Vert St Rain CP	Same	Same	N/A	Oxid. Cat.	N/A	N/A	NOx	5.22	22.86	5.22	22.86	Gas/Vapor	O (Manufacturer Data/AP-42)	
								CO	28.71	125.73	1.46	6.40			
								VOC	6.58	28.80	1.67	7.32			
								PM_{10}	<0.01	0.01	<0.01	0.01			
								PM Total	0.35	1.55	0.35	1.55			
								SO_2	0.02	0.09	0.02	0.09			
								Acetaldehyde	0.30	1.30	0.30	1.30			
								Acrolein	0.18	0.80	0.18	0.80			
								Benzene	0.02	0.07	0.02	0.07			
								Ethylbenzene	<0.01	0.01	<0.01	0.01			
								Formaldehyde	4.18	18.29	0.42	1.83			
								Methanol	0.09	0.39	0.09	0.39			
								Toluene	0.01	0.06	0.01	0.06			
								Xylenes	0.01	0.03	0.01	0.03			

CM-2001	Vert St Rain CP	Same	Same	N/A	Oxid. Cat.	N/A	N/A	NOx CO VOC PM_{10} PM Total SO_2 Acetaldehyde Acrolein Benzene Ethylbenzene Formaldehyde Methanol Toluene Xylenes	2.61 14.37 5.75 <0.01 0.16 0.01 0.13 0.08 0.01 <0.01 1.36 0.04 0.01 <0.01	11.44 62.93 25.17 0.01 0.69 0.01 0.57 0.35 0.03 <0.01 5.95 0.17 0.03 0.01	2.61 0.73 1.46 <0.01 0.16 0.01 0.13 0.08 0.01 <0.01 0.16 0.04 0.01 <0.01	11.44 3.20 6.41 0.01 0.69 0.04 0.57 0.35 0.03 <0.01 0.69 0.17 0.03 0.01	Gas/Vapor	O (Manufacturer Data/AP-42)	-
H-711	Vert St Rain CP	Same	Same	N/A	None	N/A	N/A	NOx CO VOC PM_{10} PM Total SO_2 n-Hexane	0.24 0.47 0.04 0.01 0.05 <0.01 0.01	1.03 2.07 0.17 0.06 0.23 0.02 0.06	0.24 0.47 0.04 0.01 0.05 <0.01 0.01	1.03 2.07 0.17 0.06 0.23 0.02 0.06	Gas/Vapor	O (Manufacturer Data/AP-42)	-
H-771	Vert St Rain CP	Same	Same	N/A	None	N/A	N/A	NOx CO VOC PM_{10} PM Total SO_2 n-Hexane	0.85 1.70 0.14 0.05 0.19 0.02 0.05	3.71 7.42 0.61 0.21 0.84 0.07 0.20	0.85 1.70 0.14 0.05 0.19 0.02 0.05	3.71 7.42 0.61 0.21 0.84 0.07 0.20	Gas/Vapor	O (Manufacturer Data/AP-42)	-
DH-001	Vert St	Same	Same	N/A	Flare	N/A	N/A	Benzene Toluene Xylenes n-Hexane	0.04 0.12 0.06 0.12	0.18 0.52 0.24 0.53	0.04 0.12 0.06 0.12	0.18 0.52 0.24 0.53	Gas / Vapor	GRI-GLYCalc	-
RB-001	Vert St	Same	Same	N/A	None	N/A	N/A	NOx CO VOC PM_{10} PM Total SO_2 n-Hexane	0.18 0.15 0.01 <0.01 0.01 <0.01 <0.01	0.78 0.66 0.04 0.02 0.06 <0.01 0.01	0.18 0.15 0.01 <0.01 0.01 <0.01 <0.01	0.78 0.66 0.04 0.02 0.06 <0.01 0.01	Gas/Vapor	AP-42	-
FL-991	Vert St Rain CP	Same	Same	N/A	None	N/A	N/A	NOx CO VOC PM_{10} PM Total SO_2	0.11 0.09 0.01 0.01 0.01 <0.01	0.48 0.40 0.03 0.03 0.04 <0.01	0.11 0.09 0.01 0.01 0.01 <0.01	0.48 0.40 0.03 0.03 0.04 <0.01	Gas/Vapor	AP-42	-

TNK-001	Fugitives	Same	Same	N/A	VRU	N/A	N/A	VOC HAP	109.38 10.33	479.09 45.24	2.19 0.21	9.58 0.90	Gas/Vapor	HYSYS Run	
FUG-001	Fugitives	Same	Same	N/A	None	N/A	N/A	VOC HAP	8.72 0.10	38.21 0.45	8.72 0.10	38.21 0.45	Gas/Vapor	EPA Protocol for Equipment Leak Emission Estimates	
H-2711	Vert St Rain CP	Same	Same	N/A	None	N/A	N/A	NOx CO VOC PM_{10} PM Total SO_2 n-Hexane	0.24 0.47 0.04 0.01 0.05 <0.01 0.01	1.03 2.07 0.17 0.06 0.23 0.02 0.06	0.24 0.47 0.04 0.01 0.05 <0.01 0.01	1.03 2.07 0.17 0.06 0.23 0.02 0.06	Gas/Vapor	O (Manufacturer Data/AP-42)	
H-3711	Vert St Rain CP	Same	Same	N/A	None	N/A	N/A	NOx CO VOC PM_{10} PM Total SO_2 n-Hexane	0.24 0.47 0.04 0.01 0.05 <0.01 0.01	1.03 2.07 0.17 0.06 0.23 0.02 0.06	0.24 0.47 0.04 0.01 0.05 <0.01 0.01	1.03 2.07 0.17 0.06 0.23 0.02 0.06	Gas/Vapor	O (Manufacturer Data/AP-42)	
H-4711	Vert St Rain CP	Same	Same	N/A	None	N/A	N/A	NOx CO VOC PM_{10} PM Total SO_2 n-Hexane	0.72 0.72 0.34 0.03 0.23 <0.01 <0.01	3.15 3.15 1.50 0.13 1.02 0.04 0.01	0.72 0.72 0.34 0.03 0.23 <0.01 <0.01	3.15 3.15 1.50 0.13 1.02 0.04 0.01	Gas/Vapor	O (Manufacturer Data/AP-42)	
H-5711	Vert St Rain CP	Same	Same	N/A	None	N/A	N/A	NOx CO VOC PM_{10} PM Total SO_2 n-Hexane	0.72 0.72 0.34 0.03 0.23 <0.01 <0.01	3.15 3.15 1.50 0.13 1.02 0.04 0.01	0.72 0.72 0.34 0.03 0.23 <0.01 <0.01	3.15 3.15 1.50 0.13 1.02 0.04 0.01	Gas/Vapor	O (Manufacturer Data/AP-42)	
H-6711	Vert St Rain CP	Same	Same	N/A	None	N/A	N/A	NOx CO VOC PM_{10} PM Total SO_2 n-Hexane	0.72 0.72 0.34 0.03 0.23 <0.01 <0.01	3.15 3.15 1.50 0.13 1.02 0.04 0.01	0.72 0.72 0.34 0.03 0.23 <0.01 <0.01	3.15 3.15 1.50 0.13 1.02 0.04 0.01	Gas/Vapor	O (Manufacturer Data/AP-42)	

H-4712	Vert St Rain CP	Same	Same	N/A	None	N/A	N/A	NOx CO VOC PM_{10} PM Total SO_2 n-Hexane	0.26 0.26 0.12 0.09 0.09 <0.01 <0.01	1.16 1.16 0.55 0.38 0.38 0.02 <0.01	0.26 0.26 0.12 0.09 0.09 <0.01 <0.01	1.16 1.16 0.55 0.38 0.38 0.02 <0.01	Gas/Vapor	O (Manufacturer Data/AP-42)	
H-6712	Vert St Rain CP	Same	Same	N/A	None	N/A	N/A	NOx CO VOC PM_{10} PM Total SO_2 n-Hexane	0.26 0.26 0.12 0.09 0.09 <0.01 <0.01	1.16 1.16 0.55 0.38 0.38 0.02 <0.01	0.26 0.26 0.12 0.09 0.09 <0.01 <0.01	1.16 1.16 0.55 0.38 0.38 0.02 <0.01	Gas/Vapor	O (Manufacturer Data/AP-42)	
H-742	Vert St Rain CP	Same	Same	N/A	None	N/A	N/A	NOx CO VOC PM_{10} PM Total SO_2 n-Hexane	0.22 0.18 0.01 0.02 0.02 <0.01 <0.01	0.96 0.81 0.05 0.07 0.07 <0.01 <0.01	0.22 0.18 0.01 0.02 0.02 <0.01 <0.01	0.96 0.81 0.05 0.07 0.07 <0.01 <0.01	Gas/Vapor	O (Manufacturer Data/AP-42)	
H-7711	Vert St Rain CP	Same	Same	N/A	None	N/A	N/A	NOx CO VOC PM_{10} PM Total SO_2 n-Hexane	0.72 0.72 0.34 0.03 0.23 <0.01 <0.01	3.15 3.15 1.50 0.13 1.02 0.04 0.01	0.72 0.72 0.34 0.03 0.23 <0.01 <0.01	3.15 3.15 1.50 0.13 1.02 0.04 0.01	Gas/Vapor	O (Manufacturer Data/AP-42)	
H-8711	Vert St Rain CP	Same	Same	N/A	None	N/A	N/A	NOx CO VOC PM_{10} PM Total SO_2 n-Hexane	0.72 0.72 0.34 0.03 0.23 <0.01 <0.01	3.15 3.15 1.50 0.13 1.02 0.04 0.01	0.72 0.72 0.34 0.03 0.23 <0.01 <0.01	3.15 3.15 1.50 0.13 1.02 0.04 0.01	Gas/Vapor	O (Manufacturer Data/AP-42)	
H-9711	Vert St Rain CP	Same	Same	N/A	None	N/A	N/A	NOx CO VOC PM_{10} PM Total SO_2 n-Hexane	0.72 0.72 0.34 0.03 0.23 <0.01 <0.01	3.15 3.15 1.50 0.13 1.02 0.04 0.01	0.72 0.72 0.34 0.03 0.23 <0.01 <0.01	3.15 3.15 1.50 0.13 1.02 0.04 0.01	Gas/Vapor	O (Manufacturer Data/AP-42)	

H-8712	Vert St Rain CP	Same	Same	N/A	None	N/A	N/A	NOx CO VOC PM_{10} PM Total SO_2 n-Hexane	0.26 0.26 0.12 0.09 0.09 <0.01 <0.01	1.16 1.16 0.55 0.38 0.38 0.02 <0.01	0.26 0.26 0.12 0.09 0.09 <0.01 <0.01	1.16 1.16 0.55 0.38 0.38 0.02 <0.01	Gas/Vapor	O (Manufacturer Data/AP-42)	
H-2742	Vert St Rain CP	Same	Same	N/A	None	N/A	N/A	NOx CO VOC PM_{10} PM Total SO_2 n-Hexane	0.22 0.18 0.01 0.02 0.02 <0.01 <0.01	0.96 0.81 0.05 0.07 0.07 <0.01 <0.01	0.22 0.18 0.01 0.02 0.02 <0.01 <0.01	0.96 0.81 0.05 0.07 0.07 <0.01 <0.01	Gas/Vapor	O (Manufacturer Data/AP-42)	
H-3742	Vert St Rain CP	Same	Same	N/A	None	N/A	N/A	NOx CO VOC PM_{10} PM Total SO_2 n-Hexane	0.22 0.18 0.01 0.02 0.02 <0.01 <0.01	0.96 0.81 0.05 0.07 0.07 <0.01 <0.01	0.22 0.18 0.01 0.02 0.02 <0.01 <0.01	0.96 0.81 0.05 0.07 0.07 <0.01 <0.01	Gas/Vapor	O (Manufacturer Data/AP-42)	
D1-H-782	Vert St Rain CP	Same	Same	N/A	None	N/A	N/A	NOx CO VOC PM_{10} PM Total SO_2 n-Hexane	3.40 4.53 0.57 0.78 0.78 0.06 0.02	14.90 19.86 2.48 3.43 3.43 0.27 0.81	3.40 4.53 0.57 0.78 0.78 0.06 0.02	14.90 19.86 2.48 3.43 3.43 0.27 0.81	Gas/Vapor	O (Manufacturer Data/AP-42)	
D1-H-741	Vert St Rain CP	Same	Same	N/A	None	N/A	N/A	NOx CO VOC PM_{10} PM Total SO_2 n-Hexane	0.49 0.50 0.23 0.16 0.16 <0.01 <0.02	2.14 2.20 1.02 0.70 0.70 0.03 0.09	0.49 0.50 0.23 0.16 0.16 <0.01 <0.02	2.14 2.20 1.02 0.70 0.70 0.03 0.09	Gas/Vapor	O (Manufacturer Data/AP-42)	

The EMISSION POINTS DATA SUMMARY SHEET provides a summation of emissions by emission unit. Note that uncaptured process emission unit emissions are not typically considered to be fugitive and must be accounted for on the appropriate EMISSIONS UNIT DATA SHEET and on the EMISSION POINTS DATA SUMMARY SHEET. Please note that total emissions from the source are equal to all vented emissions, all fugitive emissions, plus all other emissions (e.g. uncaptured emissions). Please complete the FUGITIVE EMISSIONS DATA SUMMARY SHEET for fugitive emission activities.

[1] Please add descriptors such as upward vertical stack, downward vertical stack, horizontal stack, relief vent, rain cap, etc.

[2] Indicate by "C" if venting is continuous. Otherwise, specify the average short-term venting rate with units, for intermittent venting (ie., 15 min/hr). Indicate as many rates as needed to clarify frequency of venting (e.g., 5 min/day, 2 days/wk).

[3] List all regulated air pollutants. Speciate VOCs, including all HAPs. Follow chemical name with Chemical Abstracts Service (CAS) number. **LIST** Acids, CO, CS_2, VOCs, H_2S, Inorganics, Lead, Organics, O_3, NO, NO_2, SO_2, SO_3, all applicable Greenhouse Gases (including CO_2 and methane), etc. **DO NOT LIST** H_2, H_2O, N_2, O_2, and Noble Gases.

[4] Give maximum potential emission rate with no control equipment operating. If emissions occur for less than 1 hr, then record emissions per batch in minutes (e.g. 5 lb VOC/20 minute batch).

[5] Give maximum potential emission rate with proposed control equipment operating. If emissions occur for less than 1 hr, then record emissions per batch in minutes (e.g. 5 lb VOC/20

minute batch).

[6] Indicate method used to determine emission rate as follows: MB = material balance; ST = stack test (give date of test); EE = engineering estimate; O = other (specify).

[7] Provide for all pollutant emissions. Typically, the units of parts per million by volume (ppmv) are used. If the emission is a mineral acid (sulfuric, nitric, hydrochloric or phosphoric) use units of milligram per dry cubic meter (mg/m^3) at standard conditions (68 °F and 29.92 inches Hg) (see 45CSR7). If the pollutant is SO_2, use units of ppmv (See 45CSR10).

Attachment J
EMISSION POINTS DATA SUMMARY SHEET

Table 2: Release Parameter Data								
Emission Point ID No. *(Must match Emission Units Table)*	Inner Diameter (ft.)	Exit Gas			Emission Point Elevation (ft)		UTM Coordinates (km)	
		Temp. (°F)	Volumetric Flow [1] (acfm) *at operating conditions*	Velocity (fps)	Ground Level *(Height above mean sea level)*	Stack Height [2] *(Release height of emissions above ground level)*	Northing	Easting
CM-1001	1.5	856	32,100	302.7	1,235	45 (est.)	4346.885	526.921
CM-1002	1.5	856	32,100	302.7	1,235	45 (est.)	4346.885	526.921
CM-2001	1.5	857	16,098	151.8	1,235	45 (est.)	4346.885	526.921
H-711	2.5	550	115	0.4	1,235	15 (est.)	4346.885	526.921
H-771	Unknown	550	Unknown	Unknown	1,235	15 (est.)	4346.885	526.921
DH-001	Unknown	212	149 scfm	Unknown	1,235	Unknown	4346.885	526.921
RB-001	Unknown	Unknown	Unknown	Unknown	1,235	Unknown	4346.885	526.921
FL-991	4.5	Unknown	135,011 scfm	141.4	1,235	195.0	4346.885	526.921
TNK-001	N/A	Ambient	N/A	N/A	1,235	N/A	4346.885	526.921
FUG-001	N/A	Ambient	N/A	N/A	1,235	N/A	4346.885	526.921
H-2711	2.5	550	115	0.4	1,235	15 (est.)	4346.885	526.921
H-3711	2.5	550	115	0.4	1,235	15 (est.)	4346.885	526.921
H-4711	2.5	530	79.6 acfm	0.27	1,235	24	4346.885	526.921
H-5711	2.5	530	79.6 acfm	0.27	1,235	24	4346.885	526.921
H-6711	2.5	530	79.6 acfm	0.27	1,235	24	4346.885	526.921
H-4712	2.5	550	Unknown	Unknown	1,235	15 (est)	4346.885	526.921
H-6712	2.5	550	Unknown	Unknown	1,235	15 (est)	4346.885	526.921

Table 2: Release Parameter Data

Emission Point ID No. *(Must match Emission Units Table)*	Inner Diameter (ft.)	Exit Gas			Emission Point Elevation (ft)		UTM Coordinates (km)	
		Temp. (°F)	Volumetric Flow [1] (acfm) *at operating conditions*	Velocity (fps)	Ground Level *(Height above mean sea level)*	Stack Height [2] *(Release height of emissions above ground level)*	Northing	Easting
H-742	**2.5**	**550**	**Unknown**	**Unknown**	**1,235**	**15 (est)**	**4346.885**	**526.921**
H-7711	**2.5**	**530**	**79.6 acfm**	**0.27**	**1,235**	**24**	**4346.885**	**526.921**
H-8711	**2.5**	**530**	**79.6 acfm**	**0.27**	**1,235**	**24**	**4346.885**	**526.921**
H-9711	**2.5**	**530**	**79.6 acfm**	**0.27**	**1,235**	**24**	**4346.885**	**526.921**
H-8712	**2.5**	**550**	**Unknown**	**Unknown**	**1,235**	**15 (est)**	**4346.885**	**526.921**
H-2724	**2.5**	**550**	**Unknown**	**Unknown**	**1,235**	**15 (est)**	**4346.885**	**526.921**
H-3742	**2.5**	**550**	**Unknown**	**Unknown**	**1,235**	**15 (est)**	**4346.885**	**526.921**
D1-H-782	**7.5**	**560**	**26,242**	**9.90**	**1,235**	**80**	**4346.885**	**526.921**
D1-H-741	**2.0**	**550**	**7,714**	**40.9**	**1,235**	**20**	**4346.885**	**526.921**

Note: Final equipment locations not yet determined; site UTM coordinates provided for each emission source.

[1] Give at operating conditions. Include inerts.
[2] Release height of emissions above ground level.

ATTACHMENT K: FUGITIVE EMISSIONS DATA SUMMARY SHEET

Attachment K

FUGITIVE EMISSIONS DATA SUMMARY SHEET

The FUGITIVE EMISSIONS SUMMARY SHEET provides a summation of fugitive emissions. Fugitive emissions are those emissions which could not reasonably pass through a stack, chimney, vent or other functionally equivalent opening. Note that uncaptured process emissions are not typically considered to be fugitive, and must be accounted for on the appropriate EMISSIONS UNIT DATA SHEET and on the EMISSION POINTS DATA SUMMARY SHEET.

Please note that total emissions from the source are equal to all vented emissions, all fugitive emissions, plus all other emissions (e.g. uncaptured emissions).

APPLICATION FORMS CHECKLIST - FUGITIVE EMISSIONS
1.) Will there be haul road activities? ☐ Yes ☒ No ☐ If YES, then complete the HAUL ROAD EMISSIONS UNIT DATA SHEET.
2.) Will there be Storage Piles? ☐ Yes ☒ No ☐ If YES, complete Table 1 of the NONMETALLIC MINERALS PROCESSING EMISSIONS UNIT DATA SHEET.
3.) Will there be Liquid Loading/Unloading Operations? ☐ Yes ☒ No ☐ If YES, complete the BULK LIQUID TRANSFER OPERATIONS EMISSIONS UNIT DATA SHEET.
4.) Will there be emissions of air pollutants from Wastewater Treatment Evaporation? ☐ Yes ☒ No ☐ If YES, complete the GENERAL EMISSIONS UNIT DATA SHEET.
5.) Will there be Equipment Leaks (e.g. leaks from pumps, compressors, in-line process valves, pressure relief devices, open-ended valves, sampling connections, flanges, agitators, cooling towers, etc.)? ☒ Yes ☐ No ☒ If YES, complete the LEAK SOURCE DATA SHEET section of the CHEMICAL PROCESSES EMISSIONS UNIT DATA SHEET.
6.) Will there be General Clean-up VOC Operations? ☐ Yes ☒ No ☐ If YES, complete the GENERAL EMISSIONS UNIT DATA SHEET.
7.) Will there be any other activities that generate fugitive emissions? ☐ Yes ☒ No ☐ If YES, complete the GENERAL EMISSIONS UNIT DATA SHEET or the most appropriate form.
If you answered "NO" to all of the items above, it is not necessary to complete the following table, "Fugitive Emissions Summary."

FUGITIVE EMISSIONS SUMMARY	All Regulated Pollutants Chemical Name/CAS [1]	Maximum Potential Uncontrolled Emissions [2]		Maximum Potential Controlled Emissions [3]		Est. Method Used [4]
		lb/hr	ton/yr	lb/hr	ton/yr	
Haul Road/Road Dust Emissions Paved Haul Roads	**Not applicable**					
Unpaved Haul Roads	**Not applicable**					
Storage Pile Emissions	**Not applicable**					
Loading/Unloading Operations	**Not applicable**					
Wastewater Treatment Evaporation & Operations	**Not applicable**					
Equipment Leaks	**VOC HAP**	**4.33 0.051**	**18.97 0.222**	**4.33 0.051**	**18.97 0.222**	**EPA**
General Clean-up VOC Emissions	**Not applicable**					
Other	**Not applicable**					

[1] List all regulated air pollutants. Speciate VOCs, including all HAPs. Follow chemical name with Chemical Abstracts Service (CAS) number. LIST Acids, CO, CS_2, VOCs, H_2S, Inorganics, Lead, Organics, O_3, NO, NO_2, SO_2, SO_3, all applicable Greenhouse Gases (including CO_2 and methane), etc. DO NOT LIST H_2, H_2O, N_2, O_2, and Noble Gases.

[2] Give rate with no control equipment operating. If emissions occur for less than 1 hr, then record emissions per batch in minutes (e.g. 5 lb VOC/20 minute batch).

[3] Give rate with proposed control equipment operating. If emissions occur for less than 1 hr, then record emissions per batch in minutes (e.g. 5 lb VOC/20 minute batch).

[4] Indicate method used to determine emission rate as follows: MB = material balance; ST = stack test (give date of test); EE = engineering estimate; O = other (specify).

ATTACHMENT L: EMISSION UNIT DATA SHEETS

EUDS - General: Heaters

EUDS - Chemical Process

Attachment L
EMISSIONS UNIT DATA SHEET
GENERAL

To be used for affected sources other than asphalt plants, foundries, incinerators, indirect heat exchangers, and quarries.

Identification Number (as assigned on *Equipment List Form*): H-2742, H-3742

1. Name or type and model of proposed affected source: Stabilization Heater, 2.28 mmBtu/hr
2. On a separate sheet(s), furnish a sketch(es) of this affected source. If a modification is to be made to this source, clearly indicated the change(s). Provide a narrative description of all features of the affected source which may affect the production of air pollutants.
3. Name(s) and maximum amount of proposed process material(s) charged per hour: Emissions provided in Question 8. Unit will operate a maximum of 8,760 hours per year.
4. Name(s) and maximum amount of proposed material(s) produced per hour: Emissions provided in Question 8.
5. Give chemical reactions, if applicable, that will be involved in the generation of air pollutants: Emissions from the combustion of natural gas.

* The identification number which appears here must correspond to the air pollution control device identification number appearing on the *List Form*.

6. Combustion Data (if applicable):

(a) Type and amount in appropriate units of fuel(s) to be burned:

Natural gas is used for fuel (estimated maximum of 17.8 million cubic feet per year with fuel higher heating value of 1,124 Btu/scf)

(b) Chemical analysis of proposed fuel(s), excluding coal, including maximum percent sulfur and ash:

Sulfur and ash are insignificant.

(c) Theoretical combustion air requirement (ACF/unit of fuel):

Unknown @ °F and psia.

(d) Percent excess air:

(e) Type and BTU/hr of burners and all other firing equipment planned to be used:

Standard, 2.28 mmBtu/hr

(f) If coal is proposed as a source of fuel, identify supplier and seams and give sizing of the coal as it will be fired:

Not applicable

(g) Proposed maximum design heat input: 2.28 $\times 10^6$ BTU/hr.

7. Projected operating schedule:

Hours/Day	24	Days/Week	7	Weeks/Year	52

8. Projected amount of pollutants that would be emitted from this affected source if no control devices were used:

@ 60 °F and 14.5 psia

a.	NO_X	0.22 lb/hr	grains/ACF
b.	SO_2	<0.01 lb/hr	grains/ACF
c.	CO	0.18 lb/hr	grains/ACF
d.	PM_{10}	0.02 lb/hr	grains/ACF
e.	Hydrocarbons	lb/hr	grains/ACF
f.	VOCs	0.012 lb/hr	grains/ACF
g.	Pb	lb/hr	grains/ACF
h.	Specify other(s)		
	Total HAPs	0.004 lb/hr	grains/ACF
	Note: Speciated HAPs are presented in attachment J.	lb/hr	grains/ACF
		lb/hr	grains/ACF
		lb/hr	grains/ACF

NOTE: (1) An Air Pollution Control Device Sheet must be completed for any air pollution device(s) used to control emissions from this affected source.

(2) Complete the Emission Points Data Sheet.

9. Proposed Monitoring, Recordkeeping, Reporting, and Testing
Please propose monitoring, recordkeeping, and reporting in order to demonstrate compliance with the proposed operating parameters. Please propose testing in order to demonstrate compliance with the proposed emissions limits.

MONITORING	RECORDKEEPING
None proposed	Record operating hours
REPORTING	**TESTING**
As required	Not applicable

MONITORING. PLEASE LIST AND DESCRIBE THE PROCESS PARAMETERS AND RANGES THAT ARE PROPOSED TO BE MONITORED IN ORDER TO DEMONSTRATE COMPLIANCE WITH THE OPERATION OF THIS PROCESS EQUIPMENT OPERATION/AIR POLLUTION CONTROL DEVICE.

RECORDKEEPING. PLEASE DESCRIBE THE PROPOSED RECORDKEEPING THAT WILL ACCOMPANY THE MONITORING.

REPORTING. PLEASE DESCRIBE THE PROPOSED FREQUENCY OF REPORTING OF THE RECORDKEEPING.

TESTING. PLEASE DESCRIBE ANY PROPOSED EMISSIONS TESTING FOR THIS PROCESS EQUIPMENT/AIR POLLUTION CONTROL DEVICE.

10. Describe all operating ranges and maintenance procedures required by Manufacturer to maintain warranty

To be determined upon delivery

Attachment L
EMISSIONS UNIT DATA SHEET
GENERAL

To be used for affected sources other than asphalt plants, foundries, incinerators, indirect heat exchangers, and quarries.

Identification Number (as assigned on *Equipment List Form*): H-7711 & H-8711 & H-9711

1. Name or type and model of proposed affected source: Tulsa Heaters Inc., 18.00 mmBtu/hr
2. On a separate sheet(s), furnish a sketch(es) of this affected source. If a modification is to be made to this source, clearly indicated the change(s). Provide a narrative description of all features of the affected source which may affect the production of air pollutants.
3. Name(s) and maximum amount of proposed process material(s) charged per hour: Emissions provided in Question 8. Unit will operate a maximum of 8,760 hours per year.
4. Name(s) and maximum amount of proposed material(s) produced per hour: Emissions provided in Question 8.
5. Give chemical reactions, if applicable, that will be involved in the generation of air pollutants: Emissions from the combustion of natural gas.

* The identification number which appears here must correspond to the air pollution control device identification number appearing on the *List Form*.

6. Combustion Data (if applicable):

(a) Type and amount in appropriate units of fuel(s) to be burned:

Natural gas is used for fuel (estimated maximum of 140.2 million cubic feet per year with fuel higher heating value of 1,124 Btu/scf)

(b) Chemical analysis of proposed fuel(s), excluding coal, including maximum percent sulfur and ash:

Sulfur and ash are insignificant.

(c) Theoretical combustion air requirement (ACF/unit of fuel):

Unknown @ °F and psia.

(d) Percent excess air:

(e) Type and BTU/hr of burners and all other firing equipment planned to be used:

Enhanced IFGR, 18.00 mmBtu/hr

(f) If coal is proposed as a source of fuel, identify supplier and seams and give sizing of the coal as it will be fired:

Not applicable

(g) Proposed maximum design heat input: 18.00 $\times 10^6$ BTU/hr.

7. Projected operating schedule:

Hours/Day	24	Days/Week	7	Weeks/Year	52

8. Projected amount of **pollutants** that would be emitted **from** this affected source if **no** control devices were used:

@ 60 °F and 14.5 psia

a.	NO_X	0.72 lb/hr	grains/ACF
b.	SO_2	<0.01 lb/hr	grains/ACF
c.	CO	0.72 lb/hr	grains/ACF
d.	PM_{10}	0.23 lb/hr	grains/ACF
e.	Hydrocarbons	lb/hr	grains/ACF
f.	VOCs	0.34 lb/hr	grains/ACF
g.	Pb	lb/hr	grains/ACF
h.	Specify other(s)		
	Total HAPs	0.03 lb/hr	grains/ACF
	Note: Speciated HAPs are presented in attachment J.	lb/hr	grains/ACF
		lb/hr	grains/ACF
		lb/hr	grains/ACF

NOTE: (1) An Air Pollution Control Device Sheet must be completed for any air pollution device(s) used to control emissions from this affected source.

(2) Complete the Emission Points Data Sheet.

9. Proposed Monitoring, Recordkeeping, Reporting, and Testing
Please propose monitoring, recordkeeping, and reporting in order to demonstrate compliance with the proposed operating parameters. Please propose testing in order to demonstrate compliance with the proposed emissions limits.

MONITORING	RECORDKEEPING
None proposed	Record operating hours
REPORTING	**TESTING**
As required	Not applicable

MONITORING. PLEASE LIST AND DESCRIBE THE PROCESS PARAMETERS AND RANGES THAT ARE PROPOSED TO BE MONITORED IN ORDER TO DEMONSTRATE COMPLIANCE WITH THE OPERATION OF THIS PROCESS EQUIPMENT OPERATION/AIR POLLUTION CONTROL DEVICE.

RECORDKEEPING. PLEASE DESCRIBE THE PROPOSED RECORDKEEPING THAT WILL ACCOMPANY THE MONITORING.

REPORTING. PLEASE DESCRIBE THE PROPOSED FREQUENCY OF REPORTING OF THE RECORDKEEPING.

TESTING. PLEASE DESCRIBE ANY PROPOSED EMISSIONS TESTING FOR THIS PROCESS EQUIPMENT/AIR POLLUTION CONTROL DEVICE.

10. Describe all operating ranges and maintenance procedures required by Manufacturer to maintain warranty

To be determined upon delivery

Attachment L
EMISSIONS UNIT DATA SHEET
GENERAL

To be used for affected sources other than asphalt plants, foundries, incinerators, indirect heat exchangers, and quarries.

Identification Number (as assigned on *Equipment List Form*): H-8712

1. Name or type and model of proposed affected source: Tulsa Heaters Inc., 6.60 mmBtu/hr
2. On a separate sheet(s), furnish a sketch(es) of this affected source. If a modification is to be made to this source, clearly indicated the change(s). Provide a narrative description of all features of the affected source which may affect the production of air pollutants.
3. Name(s) and maximum amount of proposed process material(s) charged per hour: Emissions provided in Question 8. Unit will operate a maximum of 8,760 hours per year.
4. Name(s) and maximum amount of proposed material(s) produced per hour: Emissions provided in Question 8.
5. Give chemical reactions, if applicable, that will be involved in the generation of air pollutants: Emissions from the combustion of natural gas.

* The identification number which appears here must correspond to the air pollution control device identification number appearing on the *List Form*.

6. Combustion Data (if applicable):

(a) Type and amount in appropriate units of fuel(s) to be burned:

Natural gas is used for fuel (estimated maximum of 51.4 million cubic feet per year with fuel higher heating value of 1,124 Btu/scf)

(b) Chemical analysis of proposed fuel(s), excluding coal, including maximum percent sulfur and ash:

Sulfur and ash are insignificant.

(c) Theoretical combustion air requirement (ACF/unit of fuel):

Unknown @ °F and psia.

(d) Percent excess air:

(e) Type and BTU/hr of burners and all other firing equipment planned to be used:

Round Flame "Free-Jet", 6.6 mmBtu/hr

(f) If coal is proposed as a source of fuel, identify supplier and seams and give sizing of the coal as it will be fired:

Not applicable

(g) Proposed maximum design heat input: 6.60 $\times 10^6$ BTU/hr.

7. Projected operating schedule:

Hours/Day	24	Days/Week	7	Weeks/Year	52

8. Projected amount of pollutants that would be emitted from this affected source if no control devices were used:

@ 60 °F and 14.5 psia

a.	NO_X	0.26 lb/hr	grains/ACF
b.	SO_2	<0.01 lb/hr	grains/ACF
c.	CO	0.26 lb/hr	grains/ACF
d.	PM_{10}	0.09 lb/hr	grains/ACF
e.	Hydrocarbons	lb/hr	grains/ACF
f.	VOCs	0.125 lb/hr	grains/ACF
g.	Pb	lb/hr	grains/ACF
h.	Specify other(s)		
	Total HAPs	0.012 lb/hr	grains/ACF
	Note: Speciated HAPs are presented in attachment J.	lb/hr	grains/ACF
		lb/hr	grains/ACF
		lb/hr	grains/ACF

NOTE: (1) An Air Pollution Control Device Sheet must be completed for any air pollution device(s) used to control emissions from this affected source.

(2) Complete the Emission Points Data Sheet.

9. Proposed Monitoring, Recordkeeping, Reporting, and Testing
Please propose monitoring, recordkeeping, and reporting in order to demonstrate compliance with the proposed operating parameters. Please propose testing in order to demonstrate compliance with the proposed emissions limits.

MONITORING	RECORDKEEPING
None proposed	Record operating hours
REPORTING	**TESTING**
As required	Not applicable

MONITORING. PLEASE LIST AND DESCRIBE THE PROCESS PARAMETERS AND RANGES THAT ARE PROPOSED TO BE MONITORED IN ORDER TO DEMONSTRATE COMPLIANCE WITH THE OPERATION OF THIS PROCESS EQUIPMENT OPERATION/AIR POLLUTION CONTROL DEVICE.

RECORDKEEPING. PLEASE DESCRIBE THE PROPOSED RECORDKEEPING THAT WILL ACCOMPANY THE MONITORING.

REPORTING. PLEASE DESCRIBE THE PROPOSED FREQUENCY OF REPORTING OF THE RECORDKEEPING.

TESTING. PLEASE DESCRIBE ANY PROPOSED EMISSIONS TESTING FOR THIS PROCESS EQUIPMENT/AIR POLLUTION CONTROL DEVICE.

10. Describe all operating ranges and maintenance procedures required by Manufacturer to maintain warranty

To be determined upon delivery

Attachment L
EMISSIONS UNIT DATA SHEET
GENERAL

To be used for affected sources other than asphalt plants, foundries, incinerators, indirect heat exchangers, and quarries.

Identification Number (as assigned on *Equipment List Form*): **D1-H-741**

1. Name or type and model of proposed affected source: Tulsa Heaters Inc. Process Heater, 12.23 MMBtu/hour (10.15 mmbtu/hr process duty)
2. On a separate sheet(s), furnish a sketch(es) of this affected source. If a modification is to be made to this source, clearly indicated the change(s). Provide a narrative description of all features of the affected source which may affect the production of air pollutants.
3. Name(s) and maximum amount of proposed process material(s) charged per hour: Natural gas, 12.23 MMBtu/hour
4. Name(s) and maximum amount of proposed material(s) produced per hour: Natural gas, 12.23 MMBtu/hour
5. Give chemical reactions, if applicable, that will be involved in the generation of air pollutants: Fuel combustion

* The identification number which appears here must correspond to the air pollution control device identification number appearing on the *List Form.*

6. Combustion Data (if applicable):

(a) Type and amount in appropriate units of fuel(s) to be burned:

Natural gas, 95.3 MMSCF/year

(b) Chemical analysis of proposed fuel(s), excluding coal, including maximum percent sulfur and ash:

Sulfur and ash are insignificant.

(c) Theoretical combustion air requirement (ACF/unit of fuel):

Unk @ °F and psia.

(d) Percent excess air: Unk

(e) Type and BTU/hr of burners and all other firing equipment planned to be used:

3 cylindrical heaters for 12.23 mmbtu/hr total

(f) If coal is proposed as a source of fuel, identify supplier and seams and give sizing of the coal as it will be fired:

NA

(g) Proposed maximum design heat input: $\times 10^6$ BTU/hr.

7. Projected operating schedule:

Hours/Day	24	Days/Week	7	Weeks/Year	52

8. Projected amount of pollutants that would be emitted from this affected source if no control devices were used:

@ ~60 °F and 14.5 psia

a.	NO_X	0.49 lb/hr	grains/ACF
b.	SO_2	0.0067 lb/hr	grains/ACF
c.	CO	0.50 lb/hr	grains/ACF
d.	PM_{10}	0.16 lb/hr	grains/ACF
e.	Hydrocarbons	NA lb/hr	grains/ACF
f.	VOCs	0.232 lb/hr	grains/ACF
g.	Pb	NA lb/hr	grains/ACF
h.	Specify other(s)		
		lb/hr	grains/ACF
		lb/hr	grains/ACF
		lb/hr	grains/ACF
		lb/hr	grains/ACF

NOTE: (1) An Air Pollution Control Device Sheet must be completed for any air pollution device(s) used to control emissions from this affected source.

(2) Complete the Emission Points Data Sheet.

9. Proposed Monitoring, Recordkeeping, Reporting, and Testing
Please propose monitoring, recordkeeping, and reporting in order to demonstrate compliance with the proposed operating parameters. Please propose testing in order to demonstrate compliance with the proposed emissions limits.

MONITORING	RECORDKEEPING
Operating hours	Operating hours
REPORTING	TESTING
As required	NA

MONITORING. PLEASE LIST AND DESCRIBE THE PROCESS PARAMETERS AND RANGES THAT ARE PROPOSED TO BE MONITORED IN ORDER TO DEMONSTRATE COMPLIANCE WITH THE OPERATION OF THIS PROCESS EQUIPMENT OPERATION/AIR POLLUTION CONTROL DEVICE.

RECORDKEEPING. PLEASE DESCRIBE THE PROPOSED RECORDKEEPING THAT WILL ACCOMPANY THE MONITORING.

REPORTING. PLEASE DESCRIBE THE PROPOSED FREQUENCY OF REPORTING OF THE RECORDKEEPING.

TESTING. PLEASE DESCRIBE ANY PROPOSED EMISSIONS TESTING FOR THIS PROCESS EQUIPMENT/AIR POLLUTION CONTROL DEVICE.

10. Describe all operating ranges and maintenance procedures required by Manufacturer to maintain warranty
To be determined upon delivery.

Attachment L
EMISSIONS UNIT DATA SHEET
GENERAL

To be used for affected sources other than asphalt plants, foundries, incinerators, indirect heat exchangers, and quarries.

Identification Number (as assigned on *Equipment List Form*): **D1-H-782**

1. Name or type and model of proposed affected source: Optimized Process Furnaces Process Heater, 113.36 MMBtu/hour (88.6 mmbtu/hr output)
2. On a separate sheet(s), furnish a sketch(es) of this affected source. If a modification is to be made to this source, clearly indicated the change(s). Provide a narrative description of all features of the affected source which may affect the production of air pollutants.
3. Name(s) and maximum amount of proposed process material(s) charged per hour: Natural gas, 113.36 MMBtu/hour
4. Name(s) and maximum amount of proposed material(s) produced per hour: Natural gas, 113.36 MMBtu/hour
5. Give chemical reactions, if applicable, that will be involved in the generation of air pollutants: Fuel combustion

* The identification number which appears here must correspond to the air pollution control device identification number appearing on the *List Form*.

6. Combustion Data (if applicable):

(a) Type and amount in appropriate units of fuel(s) to be burned:

Natural gas, 883.5 MMSCF/year

(b) Chemical analysis of proposed fuel(s), excluding coal, including maximum percent sulfur and ash:

Sulfur and ash are insignificant.

(c) Theoretical combustion air requirement (ACF/unit of fuel):

Unk @ °F and psia.

(d) Percent excess air: Unk

(e) Type and BTU/hr of burners and all other firing equipment planned to be used:

Vertical Cylindrical heater, 8 burners total 113.36 mmBtu/hr

(f) If coal is proposed as a source of fuel, identify supplier and seams and give sizing of the coal as it will be fired:

NA

(g) Proposed maximum design heat input: $\times 10^6$ BTU/hr.

7. Projected operating schedule:

Hours/Day	24	Days/Week	7	Weeks/Year	52

8. Projected amount of pollutants that would be emitted from this affected source if no control devices were used:

@ ~60 °F and 14.5 psia

a.	NO_X	3.40 lb/hr	grains/ACF
b.	SO_2	0.0618 lb/hr	grains/ACF
c.	CO	4.53 lb/hr	grains/ACF
d.	PM_{10}	0.78 lb/hr	grains/ACF
e.	Hydrocarbons	NA lb/hr	grains/ACF
f.	VOCs	0.567 lb/hr	grains/ACF
g.	Pb	NA lb/hr	grains/ACF
h.	Specify other(s)		
		lb/hr	grains/ACF
		lb/hr	grains/ACF
		lb/hr	grains/ACF
		lb/hr	grains/ACF

NOTE: (1) An Air Pollution Control Device Sheet must be completed for any air pollution device(s) used to control emissions from this affected source.

(2) Complete the Emission Points Data Sheet.

9. Proposed Monitoring, Recordkeeping, Reporting, and Testing
Please propose monitoring, recordkeeping, and reporting in order to demonstrate compliance with the proposed operating parameters. Please propose testing in order to demonstrate compliance with the proposed emissions limits.

MONITORING	RECORDKEEPING
Operating hours	Operating hours
REPORTING	TESTING
As required	NA

MONITORING. PLEASE LIST AND DESCRIBE THE PROCESS PARAMETERS AND RANGES THAT ARE PROPOSED TO BE MONITORED IN ORDER TO DEMONSTRATE COMPLIANCE WITH THE OPERATION OF THIS PROCESS EQUIPMENT OPERATION/AIR POLLUTION CONTROL DEVICE.

RECORDKEEPING. PLEASE DESCRIBE THE PROPOSED RECORDKEEPING THAT WILL ACCOMPANY THE MONITORING.

REPORTING. PLEASE DESCRIBE THE PROPOSED FREQUENCY OF REPORTING OF THE RECORDKEEPING.

TESTING. PLEASE DESCRIBE ANY PROPOSED EMISSIONS TESTING FOR THIS PROCESS EQUIPMENT/AIR POLLUTION CONTROL DEVICE.

10. Describe all operating ranges and maintenance procedures required by Manufacturer to maintain warranty
To be determined upon delivery.

ATTACHMENT M: AIR POLLUTION CONTROL SHEET

Attachment M
Air Pollution Control Device Sheet
(FLARE SYSTEM)

Control Device ID No. (must match Emission Units Table): FL-991

Equipment Information

1. Manufacturer: Callidus Model No. N/A	2. Method: ☒ Elevated flare ☐ Ground flare ☐ Other Describe
3. Provide diagram(s) of unit describing capture system with duct arrangement and size of duct, air volume, capacity, horsepower of movers. If applicable, state hood face velocity and hood collection efficiency.	
4. Method of system used: ☐ Steam-assisted ☒ Air-assisted ☐ Pressure-assisted ☐ Non-assisted	
5. Maximum capacity of flare: 135,011 scf/min 8,100,054 scf/hr	6. Dimensions of stack: Diameter 4.5 ft. Height 195.0 ft.
7. Estimated combustion efficiency: (Waste gas destruction efficiency) Estimated: 99.90 % Minimum guaranteed: 98.00 %	8. Fuel used in burners: ☒ Natural Gas ☐ Fuel Oil, Number ☐ Other, Specify:
9. Number of burners: Rating: 9,883 BTU/hr 10. Will preheat be used? ☐ Yes ☒ No	11. Describe method of controlling flame:
12. Flare height: 195 ft 13. Flare tip inside diameter: 4.5 ft	14. Natural gas flow rate to flare pilot flame per pilot light: 1.26 scf/min 75.6 scf/hr
15. Number of pilot lights: Total 6 @ 85,000 BTU/hr	16. Will automatic re-ignition be used? ☒ Yes ☐ No
17. If automatic re-ignition will be used, describe the method: The flare monitors the pilots via thermocouple. Should the thermocouple sense a loss of flame, the flame front generator panel will go to a re-light cycle and send a common trouble alarm to the plant DCS.	
18. Is pilot flame equipped with a monitor? ☒ Yes ☐ No If yes, what type? ☒ Thermocouple ☐ Infra-Red ☐ Ultra Violet ☐ Camera with monitoring control room ☐ Other, Describe:	
19. Hours of unit operation per year: 8,760 hours/yr. Flare only used in emergency conditions.	

Steam Injection

20. Will steam injection be used? ☐ Yes ☒ No	21. Steam pressure PSIG Minimum Expected: Design Maximum:
22. Total Steam flow rate: LB/hr	23. Temperature: °F
24. Velocity ft/sec	25. Number of jet streams
26. Diameter of steam jets: in	27. Design basis for steam injected: LB steam/LB hydrocarbon
28. How will steam flow be controlled if steam injection is used?	

Characteristics of the Waste Gas Stream to be Burned

29.

Name	Quantity Grains of H_2S/100 ft^3	Quantity (LB/hr, ft^3/hr, etc)	Source of Material
Propane	0	max 891,072 lb/hr	Pressure Relief Valve on Demethanizer
Ethane	0	Max 784,090 lb/hr	Pressure Relief Valve on DeEthanizer

30. Estimate total combustible to flare: 891,072 lb/hr @ 44 MW LB/hr or ACF/hr
(Maximum mass flow rate of waste gas) 160,000 scfm

31. Estimated total flow rate to flare including materials to be burned, carrier gases, auxiliary fuel, etc.:
891,124 lb/hr LB/hr or ACF/hr

32. Give composition of carrier gases:
Purge gas rate: 689 scfh @ 19 MW

33. Temperature of emission stream: °F Heating value of emission stream: BTU/ft^3 Mean molecular weight of emission stream: MW = 44 lb/lb-mole	34. Identify and describe all auxiliary fuels to be burned. N/A BTU/scf BTU/scf BTU/scf BTU/scf
35. Temperature of flare gas: °F	36. Flare gas flow rate: 135,011 scf/min
37. Flare gas heat content: 2,309 BTU/ft^3	38. Flare gas exit velocity: 141.5 ft/s = 43.1 m/s

39. Maximum rate during emergency for one major piece of equipment or process unit: 135,011 scf/min

40. Maximum rate during emergency for one major piece of equipment or process unit: 311 MMBTU/min

41. Describe any air pollution control device inlet and outlet gas conditioning processes (e.g., gas cooling, gas reheating, gas humidification):
The Gas Processing Facility has redundant controls and shutdown devices. Gas will be sent to flare only as a last option with a relief valve lifting and sending process gases to the flare system. It is not expected that there will be any flaring events, and any event that triggers the flare would shut down the plant so the emissions would occur for approximately 5 minutes or less.

42. Describe the collection material disposal system:
The flare collection system will consist of a 50 psig max. operating piping system including liquid knockouts and free draining pipe.

43. Have you included ***Flare Control Device*** in the Emissions Points Data Summary Sheet? Yes

44. **Proposed Monitoring, Recordkeeping, Reporting, and Testing**
Please propose monitoring, recordkeeping, and reporting in order to demonstrate compliance with the proposed operating parameters. Please propose testing in order to demonstrate compliance with the proposed emissions limits.

MONITORING:	RECORDKEEPING:
Thermocouple monitors pilot	None Proposed
REPORTING:	**TESTING:**
As required	Not applicable

MONITORING:	Please list and describe the process parameters and ranges that are proposed to be monitored in order to demonstrate compliance with the operation of this process equipment or air control device.
RECORDKEEPING:	Please describe the proposed recordkeeping that will accompany the monitoring.
REPORTING:	Please describe any proposed emissions testing for this process equipment on air pollution control device.
TESTING:	Please describe any proposed emissions testing for this process equipment on air pollution control device.

45. Manufacturer's Guaranteed Capture Efficiency for each air pollutant.
98% VOC

46. Manufacturer's Guaranteed Control Efficiency for each air pollutant.
98% VOC

47. Describe all operating ranges and maintenance procedures required by Manufacturer to maintain warranty.

ATTACHMENT N: SUPPORTING EMISSIONS CALCULATIONS

EXAMPLE CALCULATIONS

g/hp-hr Emission Factors:

Emission Factor (g/hp-hr) * Engine Rating (hp) * 1 lb/453.6 g = lb/hr

lb/mmBtu Emission Factors:

Emission Factor (lb/mmBtu) * Engine Rating (hp) * Fuel Use (Btu/hp-hr) * 1 mmBtu/1000000 Btu = lb/hr

lb/mmscf Emission Factors:

Emission Factor (lb/mmscf) * Heater Rating (mmBtu/hr) * 1/Fuel Heating Value (Btu/scf) = lb/hr

Tons per Year (TPY) Conversion:

lb/hr * Hours/Year * 1 ton/2000 lb = TPY

MarkWest Liberty Midstream & Resources L.L.C.
Sherwood Gas Plant

Summary of Facility-Wide Potential Emissions

Criteria Pollutant Potential Emissions

Process/Facility	Potential Emissions (lb/hr)					
	NOx	CO	VOC	SO_2	PM[1]	HAPs
Compressor Engine #1 (CM-1001)	5.22	1.46	1.67	0.02	0.35	1.10
Compressor Engine #2 (CM-1002)	5.22	1.46	1.67	0.02	0.35	1.10
Compressor Engine (CM-2001)	2.61	0.73	1.46	0.01	0.16	0.46
Regeneration Heater (H-711)	0.24	0.47	0.038	0.0042	0.05	0.013
Regeneration Heater (H-2711)	0.24	0.47	0.038	0.0042	0.05	0.013
Regeneration Heater (H-3711)	0.24	0.47	0.038	0.0042	0.05	0.013
Regeneration Heater (H-4711)	0.72	0.72	0.342	0.0096	0.23	0.030
Regeneration Heater (H-5711)	0.72	0.72	0.342	0.0096	0.23	0.030
Regeneration Heater (H-6711)	0.72	0.72	0.342	0.0096	0.23	0.030
Regeneration Heater (H-7711)	0.72	0.72	0.342	0.0096	0.23	0.030
Regeneration Heater (H-8711)	0.72	0.72	0.342	0.0096	0.23	0.030
Regeneration Heater (H-9711)	0.72	0.72	0.342	0.0096	0.23	0.030
Hot Oil Heater (H-771)	0.85	1.70	0.138	0.0151	0.19	0.047
Hot Oil Heater (H-4712)	0.26	0.26	0.125	0.0038	0.09	0.012
Hot Oil Heater (H-6712)	0.26	0.26	0.125	0.0038	0.09	0.012
Hot Oil Heater (H-8712)	0.26	0.26	0.125	0.0038	0.09	0.012
Stabilization Heater (H-742)	0.22	0.18	0.012	0.0013	0.02	0.004
Stabilization II Heater (H-2742)	0.22	0.18	0.012	0.0013	0.02	0.004
Stabilization III Heater (H-3742)	0.22	0.18	0.012	0.0013	0.02	0.004
DeEth HMO (D1-H-782)	3.40	4.53	0.567	0.0618	0.78	0.195
DeEth Regen (D1-H-741)	0.49	0.50	0.232	0.0067	0.16	0.021
TEG Dehydration Unit (DH-001)	--	--	2.017	--	--	0.336
Dehydration Unit Reboiler (RB-001)	0.18	0.15	0.010	0.0011	0.01	0.003
Storage Tanks	--	--	3.55	--	--	0.26
Emergency Flare (FL-991)	0.11	0.10	0.006	0.0007	0.01	--
Facility Blowdowns	--	--	--	--	--	--
Fugitive Emissions (FUG-001)	--	--	4.331	--	--	0.051
Site Wide Emissions (lb/hr)	**24.56**	**17.71**	**18.23**	**0.22**	**3.89**	**3.86**

[1] $PM = PM_{10} = PM_{2.5}$

MarkWest Liberty Midstream & Resources L.L.C.
Sherwood Gas Plant

Summary of Facility-Wide Potential Emissions

Criteria Pollutant Potential Emissions

Process/Facility	Potential Emissions (tpy)					
	NOx	CO	VOC	SO_2	PM[1]	HAPs
Compressor Engine #1 (CM-1001)	22.86	6.40	7.32	0.09	1.55	4.84
Compressor Engine #2 (CM-1002)	22.86	6.40	7.32	0.09	1.55	4.84
Compressor Engine (CM-2001)	11.44	3.20	6.41	0.04	0.69	2.02
Regeneration Heater (H-711)	1.03	2.07	0.17	0.018	0.23	0.058
Regeneration Heater (H-2711)	1.03	2.07	0.17	0.018	0.23	0.058
Regeneration Heater (H-3711)	1.03	2.07	0.17	0.018	0.23	0.058
Regeneration Heater (H-4711)	3.15	3.15	1.50	0.042	1.02	0.132
Regeneration Heater (H-5711)	3.15	3.15	1.50	0.042	1.02	0.132
Regeneration Heater (H-6711)	3.15	3.15	1.50	0.042	1.02	0.132
Regeneration Heater (H-7711)	3.15	3.15	1.50	0.042	1.02	0.132
Regeneration Heater (H-8711)	3.15	3.15	1.50	0.042	1.02	0.132
Regeneration Heater (H-9711)	3.15	3.15	1.50	0.042	1.02	0.132
Hot Oil Heater (H-771)	3.71	7.42	0.605	0.0661	0.84	0.208
Hot Oil Heater (H-4712)	1.16	1.16	0.549	0.0167	0.38	0.053
Hot Oil Heater (H-6712)	1.16	1.16	0.55	0.017	0.38	0.053
Hot Oil Heater (H-8712)	1.16	1.16	0.55	0.017	0.38	0.053
Stabilization Heater (H-742)	0.96	0.81	0.053	0.0058	0.07	0.018
Stabilization II Heater (H-2742)	0.96	0.81	0.053	0.0058	0.07	0.018
Stabilization III Heater (H-3742)	0.96	0.81	0.053	0.0058	0.07	0.018
DeEth HMO (D1-H-782)	14.90	19.86	2.483	0.2708	3.43	0.852
DeEth Regen (D1-H-741)	2.14	2.20	1.018	0.0292	0.70	0.092
TEG Dehydration Unit (DH-001)	--	--	8.836	--	--	1.470
Dehydration Unit Reboiler (RB-001)	0.78	0.65	0.043	0.0047	0.06	0.015
Storage Tanks	--	--	9.58	--	--	0.92
Emergency Flare (FL-991)	0.50	0.42	0.028	0.0030	0.04	--
Facility Blowdowns	--	--	1.816	--	--	0.087
Fugitive Emissions (FUG-001)	--	--	18.97	--	--	0.222
Site Wide Emissions (tpy)	**107.57**	**77.58**	**75.72**	**0.97**	**17.04**	**16.75**

[1] $PM = PM_{10} = PM_{2.5}$

MarkWest Liberty Midstream & Resources L.L.C.
Sherwood Gas Plant

Summary of Facility-Wide Potential Emissions

Hazardous Air Pollutant Potential Emissions

Process/Facility	HAPs - Potential Emissions (lb/hr)					
	Benzene	Ethylbenzene	Toluene	Xylenes	n-Hexane	Formaldehyde
Compressor Engine #1 (CM-1001)	1.56E-02	1.41E-03	1.45E-02	6.52E-03	3.93E-02	4.18E-01
Compressor Engine #2 (CM-1002)	1.56E-02	1.41E-03	1.45E-02	6.52E-03	3.93E-02	4.18E-01
Compressor Engine (CM-2001)	6.91E-03	6.24E-04	6.41E-03	2.89E-03	1.74E-02	1.57E-01
Regeneration Heater (H-711)	1.47E-05	--	2.38E-05	--	1.26E-02	5.24E-04
Regeneration Heater (H-2711)	1.47E-05	--	2.38E-05	--	1.26E-02	5.24E-04
Regeneration Heater (H-3711)	1.47E-05	--	2.38E-05	--	1.26E-02	5.24E-04
Regeneration Heater (H-4711)	3.36E-05	--	5.44E-05	--	2.88E-02	1.20E-03
Regeneration Heater (H-5711)	3.36E-05	--	5.44E-05	--	2.88E-02	1.20E-03
Regeneration Heater (H-6711)	3.36E-05	--	5.44E-05	--	2.88E-02	1.20E-03
Regeneration Heater (H-7711)	3.36E-05	--	5.44E-05	--	2.88E-02	1.20E-03
Regeneration Heater (H-8711)	3.36E-05	--	5.44E-05	--	2.88E-02	1.20E-03
Regeneration Heater (H-9711)	3.36E-05	--	5.44E-05	--	2.88E-02	1.20E-03
Hot Oil Heater (H-771)	5.28E-05	--	8.55E-05	--	4.52E-02	1.89E-03
Hot Oil Heater (H-4712)	1.34E-05	--	2.16E-05	--	1.15E-02	4.77E-04
Hot Oil Heater (H-6712)	1.34E-05	--	2.16E-05	--	1.15E-02	4.77E-04
Hot Oil Heater (H-8712)	1.34E-05	--	2.16E-05	--	1.15E-02	4.77E-04
Stabilization Heater (H-742)	4.62E-06	--	7.48E-06	--	3.96E-03	1.65E-04
Stabilization II Heater (H-2742)	4.62E-06	--	7.48E-06	--	3.96E-03	1.65E-04
Stabilization III Heater (H-3742)	4.62E-06	--	7.48E-06	--	3.96E-03	1.65E-04
DeEth HMO (D1-H-782)	2.16E-04	--	3.50E-04	--	1.85E-01	7.73E-03
DeEth Regen (D1-H-741)	2.33E-05	--	3.78E-05	--	2.00E-02	8.34E-04
TEG Dehydration Unit (DH-001)	4.00E-02	--	1.19E-01	5.55E-02	1.21E-01	--
Dehydration Unit Reboiler (RB-001)	3.74E-06	--	6.05E-06	--	3.20E-03	1.33E-04
Storage Tanks	--	--	--	--	2.64E-01	--
Emergency Flare (FL-991)	--	--	--	--	--	--
Facility Blowdowns	--	--	--	--	--	--
Fugitive Emissions (FUG-001)	--	--	--	--	--	--
Site Wide Emissions (lb/hr)	**0.08**	**0.00**	**0.16**	**0.07**	**0.99**	**1.01**

MarkWest Liberty Midstream & Resources L.L.C.
Sherwood Gas Plant

Summary of Facility-Wide Potential Emissions

Hazardous Air Pollutant Potential Emissions

Process/Facility	HAPs - Potential Emissions (tpy)					
	Benzene	Ethylbenzene	Toluene	Xylenes	n-Hexane	Formaldehyde
Compressor Engine #1 (CM-1001)	6.83E-02	6.16E-03	6.33E-02	2.86E-02	1.72E-01	1.83E+00
Compressor Engine #2 (CM-1002)	6.83E-02	6.16E-03	6.33E-02	2.86E-02	1.72E-01	1.83E+00
Compressor Engine (CM-2001)	3.03E-02	2.73E-03	2.81E-02	1.27E-02	7.64E-02	6.87E-01
Regeneration Heater (H-711)	6.43E-05	--	1.04E-04	--	5.51E-02	2.30E-03
Regeneration Heater (H-2711)	6.43E-05	--	1.04E-04	--	5.51E-02	2.30E-03
Regeneration Heater (H-3711)	6.43E-05	--	1.04E-04	--	5.51E-02	2.30E-03
Regeneration Heater (H-4711)	1.47E-04	--	2.38E-04	--	1.26E-01	5.26E-03
Regeneration Heater (H-5711)	1.47E-04	--	2.38E-04	--	1.26E-01	5.26E-03
Regeneration Heater (H-6711)	1.47E-04	--	2.38E-04	--	1.26E-01	5.26E-03
Regeneration Heater (H-7711)	1.47E-04	--	2.38E-04	--	1.26E-01	5.26E-03
Regeneration Heater (H-8711)	1.47E-04	--	2.38E-04	--	1.26E-01	5.26E-03
Regeneration Heater (H-9711)	2.31E-04	--	3.74E-04	--	1.98E-01	8.26E-03
Hot Oil Heater (H-771)	2.31E-04	--	3.74E-04	--	1.98E-01	8.26E-03
Hot Oil Heater (H-4712)	5.85E-05	--	9.48E-05	--	5.02E-02	2.09E-03
Hot Oil Heater (H-6712)	5.85E-05	--	9.48E-05	--	5.02E-02	2.09E-03
Hot Oil Heater (H-8712)	5.85E-05	--	9.48E-05	--	5.02E-02	2.09E-03
Stabilization Heater (H-742)	2.02E-05	--	3.27E-05	--	1.73E-02	7.22E-04
Stabilization II Heater (H-2742)	2.02E-05	--	3.27E-05	--	1.73E-02	7.22E-04
Stabilization III Heater (H-3742)	2.02E-05	--	3.27E-05	--	1.73E-02	7.22E-04
DeEth HMO (D1-H-782)	9.48E-04	--	1.53E-03	--	8.12E-01	3.39E-02
DeEth Regen (D1-H-741)	1.02E-04	--	1.66E-04	--	8.77E-02	3.65E-03
TEG Dehydration Unit (DH-001)	1.75E-01	--	5.21E-01	2.43E-01	5.32E-01	--
Dehydration Unit Reboiler (RB-001)	1.64E-05	--	2.65E-05	--	1.40E-02	5.85E-04
Storage Tanks	--	--	--	--	9.23E-01	--
Emergency Flare (FL-991)	--	--	--	--	--	--
Facility Blowdowns	--	--	--	--	--	--
Fugitive Emissions (FUG-001)	--	--	--	--	--	--
Site Wide Emissions (tpy)	**0.34**	**0.02**	**0.68**	**0.31**	**4.18**	**4.44**

MarkWest Liberty Midstream & Resources L.L.C.
Sherwood Gas Plant

Summary of Facility-Wide Potential Emissions

GreenHouse Gas Emissions

Process/Facility	GHG
	$CO_2(e)$ tpy
Compressor Engines	4.54E+04
Heaters	1.77E+05
Dehydration Unit	3.05E+03
Storage Tanks	3.51E+02
Facility Blowdowns	2.97E+03
Fugitive Emissions (FUG-001)	6.22E+01
Site Wide Emissions (lb/hr)	**228932.34**

MarkWest Liberty Midstream & Resources L.L.C.
Sherwood Gas Plant

Summary of New/Modified Sources

Change in Criteria Pollutant Potential Emissions

Process/Facility	Potential Emissions (lb/hr)					
	NOx	CO	VOC	SO_2	PM[1]	HAPs
Regeneration Heater (H-7711)	0.72	0.72	0.342	0.0096	0.23	0.030
Regeneration Heater (H-8711)	0.72	0.72	0.342	0.0096	0.23	0.030
Regenaration Heater (H-9711)	0.72	0.72	0.342	0.0096	0.23	0.030
Hot Oil Heater (H-8712)	0.26	0.26	0.125	0.0038	0.09	0.012
Stabilization Heater (H-2742)	0.22	0.18	0.012	0.0013	0.02	0.004
Stabilization Heater (H-3742)	0.22	0.18	0.012	0.0013	0.02	0.004
DeEthanization HMO Heater (D1-H-782)	3.40	4.53	0.567	0.0618	0.78	0.195
DeEthanization Regen Heater (D1-H-741)	0.49	0.50	0.232	0.0067	0.16	0.021
Emergency Flare	0.005	0.004	0.000	0.000	0.000	--
Facility Blowdowns	--	--	--	--	--	--
Fugitive Emissions (FUG-001)	--	--	-4.39	--	--	-0.05
Total Modification Emission Increase	**6.76**	**7.83**	**-2.42**	**0.10**	**1.76**	**0.27**

[1] $PM = PM_{10} = PM_{2.5}$

Change in Criteria Pollutant Potential Emissions

Process/Facility	Potential Emissions (tpy)					
	NOx	CO	VOC	SO_2	PM[1]	HAPs
Regeneration Heater (H-7711)	3.15	3.15	1.50	0.042	1.02	0.132
Regeneration Heater (H-8711)	3.15	3.15	1.50	0.042	1.02	0.132
Regenaration Heater (H-9711)	3.15	3.15	1.50	0.042	1.02	0.132
Hot Oil Heater (H-8712)	1.16	1.16	0.55	0.017	0.38	0.053
Stabilization Heater (H-2742)	0.96	0.81	0.05	0.006	0.07	0.018
Stabilization Heater (H-3742)	0.96	0.81	0.05	0.006	0.07	0.018
DeEthanization HMO Heater (D1-H-782)	14.90	19.86	2.48	0.271	3.43	0.852
DeEthanization Regen Heater (D1-H-741)	2.14	2.20	1.02	0.029	0.70	0.092
Emergency Flare	0.02	0.02	0.00	0.00	0.00	--
Facility Blowdowns	--	--	0.26	--	--	0.01
Fugitive Emissions (FUG-001)	--	--	-19.24	--	--	-0.23
Total Modification Emission Increase	**29.60**	**34.31**	**-10.33**	**0.45**	**7.73**	**1.21**

[1] $PM = PM_{10} = PM_{2.5}$

Change in Hazardous Air Pollutant Potential Emissions

Process/Facility	HAPs - Potential Emissions (lb/hr)					
	Benzene	Ethylbenzene	Toluene	Xylenes	n-Hexane	Formaldehyde
Regeneration Heater (H-7711)	3.36E-05	--	5.44E-05	--	2.88E-02	1.20E-03
Regeneration Heater (H-8711)	3.36E-05	--	5.44E-05	--	2.88E-02	1.20E-03
Regenaration Heater (H-9711)	3.36E-05	--	5.44E-05	--	2.88E-02	1.20E-03
Hot Oil Heater (H-8712)	1.34E-05	--	2.16E-05	--	1.15E-02	4.77E-04
Stabilization Heater (H-2742)	4.62E-06	--	7.48E-06	--	3.96E-03	1.65E-04
Stabilization Heater (H-3742)	4.62E-06	--	7.48E-06	--	3.96E-03	1.65E-04
DeEthanization HMO Heater (D1-H-782)	2.16E-04	--	3.50E-04	--	1.85E-01	7.73E-03
DeEthanization Regen Heater (D1-H-741)	2.33E-05	--	3.78E-05	--	2.00E-02	8.34E-04
Emergency Flare	--	--	--	--	--	--
Facility Blowdowns	--	--	--	--	--	--
Fugitive Emissions (FUG-001)	--	--	--	--	--	--
Total Modification Emission Increase	**3.63E-04**	**0.00**	**5.88E-04**	**0.00**	**3.11E-01**	**1.30E-02**

Change in Hazardous Air Pollutant Potential Emissions

Process/Facility	HAPs - Potential Emissions (tpy)					
	Benzene	Ethylbenzene	Toluene	Xylenes	n-Hexane	Formaldehyde
Regeneration Heater (H-7711)	1.47E-04	--	2.38E-04	--	1.26E-01	5.26E-03
Regeneration Heater (H-8711)	1.47E-04	--	2.38E-04	--	1.26E-01	5.26E-03
Regenaration Heater (H-9711)	1.47E-04	--	2.38E-04	--	1.26E-01	5.26E-03
Hot Oil Heater (H-8712)	5.85E-05	--	9.48E-05	--	5.02E-02	2.09E-03
Stabilization Heater (H-2742)	2.02E-05	--	3.27E-05	--	1.73E-02	7.22E-04
Stabilization Heater (H-3742)	2.02E-05	--	3.27E-05	--	1.73E-02	7.22E-04
DeEthanization HMO Heater (D1H-782)	9.48E-04	--	1.53E-03	--	8.12E-01	3.39E-02
DeEthanization Regen Heater (D1-H-741)	1.02E-04	--	1.66E-04	--	8.77E-02	3.65E-03
Emergency Flare	--	--	--	--	--	--
Facility Blowdowns	--	--	--	--	--	--
Fugitive Emissions (FUG-001)	--	--	--	--	--	--
Total Modification Emission Increase	**1.59E-03**	**0.00**	**2.58E-03**	**0.00**	**1.36E+00**	**5.68E-02**

Greenhouse Gas Emissions	$CO_2(e)$ tpy
Current Facility Total GHG $CO_2(e)$	228932.34
Previous Total GHG $CO_2(e)$	120736.3
Total Modificaiton GHG $CO_2(e)$	**108196.04**

GHG Calculations
MarkWest Liberty Midstream & Resources L.L.C.
Sherwood Gas Plant

Reboiler/Heaters

Equipment	Heat Input (LHV) (mmbtu/hr)	Heat Input (HHV) (mmbtu/hr)	Emission Factors CO2 (lb/mmbtu)	CH4 (lb/mmbtu)	N20 (lb/mmbtu)	CO2(e) CO2 Emission Rate (tpy)	CO2(e) CH4 Emission Rate (tpy)	CO2(e) N2O Emission Rate (tpy)
Reboiler	2.0000	2.2000	116.887892	0.0022046	0.00022046	1126.33	0.53	0.66
Flare Pilot	0.0184	0.0203	116.887892	0.0022046	0.00022046	10.38	0.00	0.01
Heater H-711	7.86	8.6460	116.887892	0.0022046	0.00022046	4426.48	2.09	2.59
Heater H-771	28.25	31.0750	116.887892	0.0022046	0.00022046	15909.44	7.50	9.30
Heater H-2711	7.86	8.6460	116.887892	0.0022046	0.00022046	4426.48	2.09	2.59
Heater H-3711	7.86	8.6460	116.887892	0.0022046	0.00022046	4426.48	2.09	2.59
Heater H-4711	18.00	19.8000	116.887892	0.0022046	0.00022046	10136.99	4.78	5.93
Heater H-5711	18.00	19.8000	116.887892	0.0022046	0.00022046	10136.99	4.78	5.93
Heater H-6711	18.00	19.8000	116.887892	0.0022046	0.00022046	10136.99	4.78	5.93
Heater H-7711	18.00	19.8000	116.887892	0.0022046	0.00022046	10136.99	4.78	5.93
Heater H-8711	18.00	19.8000	116.887892	0.0022046	0.00022046	10136.99	4.78	5.93
Heater H-9711	18.00	19.8000	116.887892	0.0022046	0.00022046	10136.99	4.78	5.93
Heater H-4712	6.60	7.2600	116.887892	0.0022046	0.00022046	3716.89	1.75	2.17
Heater H-6712	6.60	7.2600	116.887892	0.0022046	0.00022046	3716.89	1.75	2.17
Heater H-8712	6.60	7.2600	116.887892	0.0022046	0.00022046	3716.89	1.75	2.17
Heater D1-H-782	113.36	124.6960	116.887892	0.0022046	0.00022046	63840.48	30.10	37.33
Heater D1-H-741	12.23	13.4530	116.887892	0.0022046	0.00022046	6887.52	3.25	4.03
Heater H-3742	2.28	2.5080	116.887892	0.0022046	0.00022046	1284.02	0.61	0.75
Heater H-2742	2.28	2.5080	116.887892	0.0022046	0.00022046	1284.02	0.61	0.75
Heater H-742	2.28	2.5080	116.887892	0.0022046	0.00022046	1284.02	0.61	0.75
Total						176878.25	83.40	103.42

Engines

HP	Fuel Use (HHV) (btu/bhp-hr)	Fuel Use (HHV) (mmbtu/yr)	Emission Factors CO2 (lb/mmbtu)	CH4 (lb/mmbtu)	N20 (lb/mmbtu)	CO2(e) CO2 Emission Rate (tpy)	CO2(e) CH4 Emission Rate (tpy)	CO2(e) N2O Emission Rate (tpy)
3616	7,484	310425.842	116.887892	0.0022046	0.00022046	18142.51117	8.5545602	10.6076546
3616	7,484	310425.842	116.887892	0.0022046	0.00022046	18142.51117	8.5545602	10.6076546
3608	7504	155792.045	116.887892	0.0022046	0.00022046	9105.101854	4.2932393	5.3236167
Total						45390.12419	21.40235958	26.53892588

GHG Calculations
MarkWest Liberty Midstream & Resources L.L.C.
Sherwood Gas Plant

Dehydrator GHG Calculation

Constituent	Uncontrolled Emission Rate (tpy)	Controlled Emission Rate (tpy)	MW	# of Carbons	CO2 by Oxidation + CH4 (tpy)
Methane	421.1032	8.4221	16	1	1134.87
Ethane	181.2238	3.6245	30	2	520.96
Propane	111.4820	2.2296	44	3	327.76
i-butane	20.5260	0.4111	58	4	61.04
n-butane	60.4405	1.2088	58	4	179.74
i-pentane	17.5528	0.3511	72	5	52.56
n-pentane	27.0379	0.5408	72	5	80.96
n-hexane	26.5754	0.5315	86	6	79.95
Cyclohexane	9.8095	0.1962	84	6	30.21
Other Hexanes	24.7355	0.4947	100	6	64.00
Heptanes	35.8797	0.7176	100	7	108.30
Benzene	8.7595	0.1752	78	6	29.05
Toluene	26.0361	0.5207	92	7	85.42
Xylenes	12.1482	0.2430	106	8	39.53
C8+ Heavies	25.6412	1.2155	114	8	75.42
Total CO2					**2869.77**
CO2(e) from CH4					**176.86**

Fugitive GHG Calculation

Equipment type	Stream Type (Gas/Liquid	Total Emissions (tpy)	CH4 * Wt%	CO2(e) from CH4
Connectors	Gas	0.4404	69.88	7.69
Flanges	Gas	0.7001	69.88	12.23
Open-Ended Lines	Gas	0.0000	69.88	0.00
Pump Seals	Gas	0.0000	69.88	0.00
Valves	Gas	1.6970	69.88	29.65
Other[1]	Gas	0.6319	69.88	11.04
Connectors	Light Oil	3.0933	0.400	0.31
Flanges	Light Oil	1.2328	0.400	0.12
Open-Ended Lines	Light Oil	0.0000	0.400	0.00
Pump Seals	Light Oil	1.1039	0.400	0.11
Valves	Light Oil	10.0700	0.400	1.01
Other[1]	Light Oil	0.0000	0.400	0.00
CO2(e) from CH4				62.16

*Taken from Gas Analysis and Condensate Analysis

Storage Tanks

Constituent	Emission Rate (tpy)	MW	# of Carbons	CO2 by Oxidation + CH4 (tpy)
Methane	12.8305	16	1	35.28
Ethane	5.8480	30	2	17.15
Propane	3.7553	44	3	11.27
i-Butane	0.7507	58	4	2.28
n-Butane	1.7169	58	4	5.21
i-Pentane	0.6937	72	5	2.12
n-Pentane	0.6020	72	5	1.84
3-Mpentane	0.4011	86	6	1.23
n-Hexane	0.9227	84	6	2.90
n-Heptane	0.2435	100	7	0.75
n-Octane	0.2636	114	8	0.81
n-Nonane	0.1478	128	9	0.46
n-Decane	0.0845	142	10	0.26
CO2	0.1457	44	1	0.15
Total CO2				**81.71**
Total CO_2(e) as CH4				**269.44**

GHG Vented Blowdown Emissions

Blowdown Emissions Sources	Number of Units	Vented Gas Volume Per Blowdown Event (scf)	Number of Blowdown Events per year	Total Volume NG Emitted (scf/yr)	Potential CH_4 Emissions[1] (tpy)	Potential CO_2 Emissions[1] (tpy)	Potential CO_2e Emissions (tpy)
Engines	3	0	0	0	0.0	0.000	0
Sherwood I-IX	9	250,000	4	9,000,000	117.4	0.698	2466
Deethanzier	1	459,000	4	1,836,000	24.0	0.142	503
Total					**141.4**	**0.841**	**2969**

1. Calculated in accordance with Equations W-35 and W-36 in Subpart W of 40 CFR 98.

MarkWest Liberty Midstream & Resources L.L.C.
Sherwood Gas Plant

Regeneration Heater
(H-4711 - H-9711)

Source Designation:	
Manufacturer:	Devco
Year Installed	TBD
Fuel Used:	Natural Gas
Higher Heating Value (HHV) (Btu/scf):	1,124
Heat Duty (mmbtu/hr)	14
Heat Input (MMBtu/hr)	18.00
Fuel Consumption (mmscf/hr):	1.60E-02
Potential Annual Hours of Operation (hr/yr):	8,760

Criteria and Manufacturer Specific Pollutant Emission Rates

Pollutant	Emission Factor (lb/MMbtu)[a,b]	Potential Emissions (lb/hr)[c]	(tons/yr)[d]
NO_x	0.04	0.720	3.154
CO	0.04	0.720	3.154
SO_2	5.34E-04	0.010	0.0421
PM Total	0.013	0.234	1.0249
PM Condensable	5.07E-03	0.091	0.400
PM_{10} (Filterable)	1.69E-03	0.030	0.133
$PM_{2.5}$ (Filterable)	1.69E-03	0.030	0.133
VOC	0.019	0.342	1.498

Hazardous Air Pollutant (HAP) Potential Emissions

Pollutant	Emission Factor (lb/MMscf)[a]	Potential Emissions (lb/hr)[c]	Potential Emissions (tons/yr)[d]
HAPs:			
3-Methylchloranthrene	1.80E-06	2.88E-08	1.26E-07
7,12-Dimethylbenz(a)anthracene	1.60E-05	2.56E-07	1.12E-06
Acenaphthene	1.80E-06	2.88E-08	1.26E-07
Acenaphthylene	1.80E-06	2.88E-08	1.26E-07
Anthracene	2.40E-06	3.84E-08	1.68E-07
Benz(a)anthracene	1.80E-06	2.88E-08	1.26E-07
Benzene	2.10E-03	3.36E-05	1.47E-04
Benzo(a)pyrene	1.20E-06	1.92E-08	8.42E-08
Benzo(b)fluoranthene	1.80E-06	2.88E-08	1.26E-07
Benzo(g,h,i)perylene	1.20E-06	1.92E-08	8.42E-08
Benzo(k)fluoranthene	1.80E-06	2.88E-08	1.26E-07
Chrysene	1.80E-06	2.88E-08	1.26E-07
Dibenzo(a,h) anthracene	1.20E-06	1.92E-08	8.42E-08
Dichlorobenzene	1.20E-03	1.92E-05	8.42E-05
Fluoranthene	3.00E-06	4.80E-08	2.10E-07
Fluorene	2.80E-06	4.48E-08	1.96E-07
Formaldehyde	7.50E-02	1.20E-03	5.26E-03
Hexane	1.80E+00	2.88E-02	1.26E-01
Indo(1,2,3-cd)pyrene	1.80E-06	2.88E-08	1.26E-07
Phenanthrene	1.70E-05	2.72E-07	1.19E-06
Pyrene	5.00E-06	8.01E-08	3.51E-07
Toluene	3.40E-03	5.44E-05	2.38E-04
Arsenic	2.00E-04	3.20E-06	1.40E-05
Beryllium	1.20E-05	1.92E-07	8.42E-07
Cadmium	1.10E-03	1.76E-05	7.72E-05
Chromium	1.40E-03	2.24E-05	9.82E-05
Cobalt	8.40E-05	1.35E-06	5.89E-06
Lead	5.00E-04	8.01E-06	3.51E-05
Manganese	3.80E-04	6.09E-06	2.67E-05
Mercury	2.60E-04	4.16E-06	1.82E-05
Nickel	2.10E-03	3.36E-05	1.47E-04
Selenium	2.40E-05	3.84E-07	1.68E-06
Polycyclic Organic Matter:			
Methylnaphthalene (2-)	2.40E-05	3.84E-07	1.68E-06
Naphthalene	6.10E-04	9.77E-06	4.28E-05
Total HAP		**3.02E-02**	**1.32E-01**

[a] Emission factors from AP-42 Section 1.4 "Natural Gas Combustion" Tables 1.4-1, 1.4-2, & 1.4-3

[b] Nox, CO, VOC, PM emission factors from vendor guarantee.

[c] Emission Rate (lb/hr) = Rated Capacity (MMbtu/hr) × Emission Factor (lb/MMbtu).

[d] Annual Emissions $(\text{tons/yr})_{\text{Potential}} = (\text{lb/hr})_{\text{Emissions}} \times$ (Maximum Allowable Operating Hours, 8760 hr/yr) × (1 ton/2000 lb).

MarkWest Liberty Midstream & Resources L.L.C.
Sherwood Gas Plant

Hot Oil Heaters
(H-4712, H-6712, H-8712)

Source Designation:	
Manufacturer:	Zeeco USA, L.L.C.
Year Installed	2014
Fuel Used:	Natural Gas
Higher Heating Value (HHV) (Btu/scf):	1,037
Calculated Heat Release (mmbtu/hr)	5.77
Maximum Heat Input (mmbtu/hr)	6.60
Fuel Consumption (mmscf/hr):	6.36E-03
Potential Annual Hours of Operation (hr/yr):	8,760

Criteria and Manufacturer Specific Pollutant Emission Rates

Pollutant	Emission Factor (lb/mmbtu)[a,b]	Potential Emissions (lb/hr)[c]	Potential Emissions (tons/yr)[d]
NO_x	0.04	0.264	1.156
CO	0.04	0.264	1.156
SO_2	0.0006	0.004	0.017
PM Total	0.013	0.086	0.376
PM Condensable	0.013	0.086	0.376
PM_{10} (Filterable)	0.013	0.086	0.376
$PM_{2.5}$ (Filterable)	0.013	0.086	0.376
VOC	0.019	0.125	0.549

Hazardous Air Pollutant (HAP) Potential Emissions

Pollutant	Emission Factor (lb/MMscf)[a]	Potential Emissions (lb/hr)[c]	Potential Emissions (tons/yr)[d]
HAPs:			
3-Methylchloranthrene	1.80E-06	1.15E-08	5.02E-08
7,12-Dimethylbenz(a)anthracene	1.60E-05	1.02E-07	4.46E-07
Acenaphthene	1.80E-06	1.15E-08	5.02E-08
Acenaphthylene	1.80E-06	1.15E-08	5.02E-08
Anthracene	2.40E-06	1.53E-08	6.69E-08
Benz(a)anthracene	1.80E-06	1.15E-08	5.02E-08
Benzene	2.10E-03	1.34E-05	5.85E-05
Benzo(a)pyrene	1.20E-06	7.64E-09	3.35E-08
Benzo(b)fluoranthene	1.80E-06	1.15E-08	5.02E-08
Benzo(g,h,i)perylene	1.20E-06	7.64E-09	3.35E-08
Benzo(k)fluoranthene	1.80E-06	1.15E-08	5.02E-08
Chrysene	1.80E-06	1.15E-08	5.02E-08
Dibenzo(a,h) anthracene	1.20E-06	7.64E-09	3.35E-08
Dichlorobenzene	1.20E-03	7.64E-06	3.35E-05
Fluoranthene	3.00E-06	1.91E-08	8.36E-08
Fluorene	2.80E-06	1.78E-08	7.81E-08
Formaldehyde	7.50E-02	4.77E-04	2.09E-03
Hexane	1.80E+00	1.15E-02	5.02E-02
Indo(1,2,3-cd)pyrene	1.80E-06	1.15E-08	5.02E-08
Phenanthrene	1.70E-05	1.08E-07	4.74E-07
Pyrene	5.00E-06	3.18E-08	1.39E-07
Toluene	3.40E-03	2.16E-05	9.48E-05
Arsenic	2.00E-04	1.27E-06	5.58E-06
Beryllium	1.20E-05	7.64E-08	3.35E-07
Cadmium	1.10E-03	7.00E-06	3.07E-05
Chromium	1.40E-03	8.91E-06	3.90E-05
Cobalt	8.40E-05	5.35E-07	2.34E-06
Lead	5.00E-04	3.18E-06	1.39E-05
Manganese	3.80E-04	2.42E-06	1.06E-05
Mercury	2.60E-04	1.65E-06	7.25E-06
Nickel	2.10E-03	1.34E-05	5.85E-05
Selenium	2.40E-05	1.53E-07	6.69E-07
Polycyclic Organic Matter:			
Methylnaphthalene (2-)	2.40E-05	1.53E-07	6.69E-07
Naphthalene	6.10E-04	3.88E-06	1.70E-05
Total HAP		**1.20E-02**	**5.26E-02**

[a] Emission factors from AP-42 Section 1.4 "Natural Gas Combustion" Tables 1.4-1, 1.4-2, & 1.4-3

[b] Nox, CO, PM, and VOC emission factors from vendor guarantee.

[c] Emission Rate (lb/hr) = Rated Capacity (MMbtu/hr) × Emission Factor (lb/MMbtu).

[d] Annual Emissions $(\text{tons/yr})_{\text{Potential}} = (\text{lb/hr})_{\text{Emissions}} \times$ (Maximum Allowable Operating Hours, 8760 hr/yr) × (1 ton/2000 lb).

MarkWest Liberty Midstream & Resources L.L.C.
Sherwood Gas Plant

Stabilizer Heater
(H-742, H-2742, H-3742)

Source Designation:	
Manufacturer:	Unknown
Year Installed	TBD
Fuel Used:	Natural Gas
Higher Heating Value (HHV) (Btu/scf):	1,037
Heater Duty (mmbtu/hr)	1.914
Heat Input (MMBtu/hr)	2.28
Fuel Consumption (mmscf/hr):	2.20E-03
Potential Annual Hours of Operation (hr/yr):	8,760

Criteria and Manufacturer Specific Pollutant Emission Rates

Pollutant	Emission Factor (lb/MMscf)[a,b]	Potential Emissions (lb/hr)[c]	Potential Emissions (tons/yr)[d]
NO_x	100	0.220	0.963
CO	84	0.185	0.809
SO_2	0.6	0.0013	0.0058
PM Total	7.6	0.0167	0.0732
PM Condensable	5.7	0.013	0.055
PM_{10} (Filterable)	1.9	0.004	0.018
$PM_{2.5}$ (Filterable)	1.9	0.004	0.018
VOC	5.5	0.012	0.053

Hazardous Air Pollutant (HAP) Potential Emissions

Pollutant	Emission Factor (lb/MMscf)[a]	Potential Emissions (lb/hr)[c]	Potential Emissions (tons/yr)[d]
HAPs:			
3-Methylchloranthrene	1.80E-06	3.96E-09	1.73E-08
7,12-Dimethylbenz(a)anthracene	1.60E-05	3.52E-08	1.54E-07
Acenaphthene	1.80E-06	3.96E-09	1.73E-08
Acenaphthylene	1.80E-06	3.96E-09	1.73E-08
Anthracene	2.40E-06	5.28E-09	2.31E-08
Benz(a)anthracene	1.80E-06	3.96E-09	1.73E-08
Benzene	2.10E-03	4.62E-06	2.02E-05
Benzo(a)pyrene	1.20E-06	2.64E-09	1.16E-08
Benzo(b)fluoranthene	1.80E-06	3.96E-09	1.73E-08
Benzo(g,h,i)perylene	1.20E-06	2.64E-09	1.16E-08
Benzo(k)fluoranthene	1.80E-06	3.96E-09	1.73E-08
Chrysene	1.80E-06	3.96E-09	1.73E-08
Dibenzo(a,h) anthracene	1.20E-06	2.64E-09	1.16E-08
Dichlorobenzene	1.20E-03	2.64E-06	1.16E-05
Fluoranthene	3.00E-06	6.60E-09	2.89E-08
Fluorene	2.80E-06	6.16E-09	2.70E-08
Formaldehyde	7.50E-02	1.65E-04	7.22E-04
Hexane	1.80E+00	3.96E-03	1.73E-02
Indo(1,2,3-cd)pyrene	1.80E-06	3.96E-09	1.73E-08
Phenanthrene	1.70E-05	3.74E-08	1.64E-07
Pyrene	5.00E-06	1.10E-08	4.82E-08
Toluene	3.40E-03	7.48E-06	3.27E-05
Arsenic	2.00E-04	4.40E-07	1.93E-06
Beryllium	1.20E-05	2.64E-08	1.16E-07
Cadmium	1.10E-03	2.42E-06	1.06E-05
Chromium	1.40E-03	3.08E-06	1.35E-05
Cobalt	8.40E-05	1.85E-07	8.09E-07
Lead	5.00E-04	1.10E-06	4.82E-06
Manganese	3.80E-04	8.35E-07	3.66E-06
Mercury	2.60E-04	5.72E-07	2.50E-06
Nickel	2.10E-03	4.62E-06	2.02E-05
Selenium	2.40E-05	5.28E-08	2.31E-07
Polycyclic Organic Matter:			
Methylnaphthalene (2-)	2.40E-05	5.28E-08	2.31E-07
Naphthalene	6.10E-04	1.34E-06	5.87E-06
Total HAP		**4.15E-03**	**1.82E-02**

[a] Emission factors from AP-42 Section 1.4 "Natural Gas Combustion" Tables 1.4-1, 1.4-2, & 1.4-3

[b] NO_x and CO emission factors from vendor guarantee.

[c] Emission Rate (lb/hr) = Rated Capacity (MMscf/hr) × Emission Factor (lb/MMscf).

[d] Annual Emissions $(\text{tons/yr})_{\text{Potential}} = (\text{lb/hr})_{\text{Emissions}} \times$ (Maximum Allowable Operating Hours, 8760 hr/yr) × (1 ton/2000 lb).

MarkWest Liberty Midstream and Resources, L.L.C.
Sherwood Gas Plant

DeEthanizer HMO Heater
(D1-H-782)

Source Designation:	
Make/Model:	HRC/7-H-2782
Year Installed	2015
Fuel Used:	Residue Gas
Lower Heating Value (LHV) (Btu/scf):	1,124
Heat Input (MMBtu/hr)	113.36
Fuel Consumption (mmscf/hr):	1.03E-01
Potential Annual Hours of Operation (hr/yr):	8,760

Criteria and Manufacturer Specific Pollutant Emission Rates

Pollutant	Emission Factor (lb/MMscf)[a]	Emission Factor (lb/MMBtu)[b]	Potential Emissions (lb/hr)[c]	Potential Emissions (tons/yr)[d]
NO_x	--	0.03	3.401	14.896
CO	--	0.04	4.534	19.861
SO_2	0.6	--	0.062	0.271
PM	7.6	--	0.783	3.430
PM Condensable	5.7	--	0.587	2.573
PM_{10} (Filterable)	1.9	--	0.196	0.858
$PM_{2.5}$ (Filterable)	1.9	--	0.196	0.858
VOC	5.5	--	0.567	2.483

Hazardous Air Pollutant (HAP) Potential Emissions

Pollutant	Emission Factor (lb/MMscf)[a]	Potential Emissions (lb/hr)[c]	Potential Emissions (tons/yr)[d]
HAPs:			
3-Methylchloranthrene	1.80E-06	1.85E-07	8.12E-07
7,12-Dimethylbenz(a)anthracene	1.60E-05	1.65E-06	7.22E-06
Acenaphthene	1.80E-06	1.85E-07	8.12E-07
Acenaphthylene	1.80E-06	1.85E-07	8.12E-07
Anthracene	2.40E-06	2.47E-07	1.08E-06
Benz(a)anthracene	1.80E-06	1.85E-07	8.12E-07
Benzene	2.10E-03	2.16E-04	9.48E-04
Benzo(a)pyrene	1.20E-06	1.24E-07	5.42E-07
Benzo(b)fluoranthene	1.80E-06	1.85E-07	8.12E-07
Benzo(g,h,i)perylene	1.20E-06	1.24E-07	5.42E-07
Benzo(k)fluoranthene	1.80E-06	1.85E-07	8.12E-07
Chrysene	1.80E-06	1.85E-07	8.12E-07
Dibenzo(a,h) anthracene	1.20E-06	1.24E-07	5.42E-07
Dichlorobenzene	1.20E-03	1.24E-04	5.42E-04
Fluoranthene	3.00E-06	3.09E-07	1.35E-06
Fluorene	2.80E-06	2.89E-07	1.26E-06
Formaldehyde	7.50E-02	7.73E-03	3.39E-02
Hexane	1.80E+00	1.85E-01	8.12E-01
Indo(1,2,3-cd)pyrene	1.80E-06	1.85E-07	8.12E-07
Phenanthrene	1.70E-05	1.75E-06	7.67E-06
Pyrene	5.00E-06	5.15E-07	2.26E-06
Toluene	3.40E-03	3.50E-04	1.53E-03
Arsenic	2.00E-04	2.06E-05	9.03E-05
Beryllium	1.20E-05	1.24E-06	5.42E-06
Cadmium	1.10E-03	1.13E-04	4.97E-04
Chromium	1.40E-03	1.44E-04	6.32E-04
Cobalt	8.40E-05	8.66E-06	3.79E-05
Lead	5.00E-04	5.15E-05	2.26E-04
Manganese	3.80E-04	3.92E-05	1.72E-04
Mercury	2.60E-04	2.68E-05	1.17E-04
Nickel	2.10E-03	2.16E-04	9.48E-04
Selenium	2.40E-05	2.47E-06	1.08E-05
Polycyclic Organic Matter:			
Methylnaphthalene (2-)	2.40E-05	2.47E-06	1.08E-05
Naphthalene	6.10E-04	6.29E-05	2.75E-04
Total HAP		**1.95E-01**	**8.52E-01**

[a] Emission factors from AP-42 Section 1.4 "Natural Gas Combustion" Tables 1.4-1, 1.4-2, & 1.4-3

[b] Manufacturer data sheet. See attached vendor information

[c] Emission Rate (lb/hr) = Rated Capacity (MMscf/hr) × Emission Factor (lb/MMscf).

[d] Annual Emissions $(\text{tons/yr})_{\text{Potential}} = (\text{lb/hr})_{\text{Emissions}} \times$ (Maximum Allowable Operating Hours, 8760 hr/yr) × (1 ton/2000 lb).

MarkWest Liberty Midstream and Resources, L.L.C.
Sherwood Gas Plant

DeEthanizer Regen Heater
(D1-H-741)

Source Designation:	
Make/Model:	Tulsa Heater Inc
Year Installed	2015
Fuel Used:	Residue Gas
Lower Heating Value (LHV) (Btu/scf):	1,124
Heat Input (MMBtu/hr)	12.23
Fuel Consumption (mmscf/hr):	1.11E-02
Potential Annual Hours of Operation (hr/yr):	8,760

Criteria and Manufacturer Specific Pollutant Emission Rates

Pollutant	Emission Factor (lb/MMscf)[a]	Emission Factor (lb/MMBtu)[b]	Potential Emissions (lb/hr)[c]	Potential Emissions (tons/yr)[d]
NO_x	--	0.04	0.489	2.143
CO	--	0.041	0.501	2.196
SO_2	0.6	--	0.007	0.029
PM	--	0.013	0.159	0.696
PM Condensable	5.7	--	0.063	0.278
PM_{10} (Filterable)	1.9	--	0.021	0.093
$PM_{2.5}$ (Filterable)	1.9	--	0.021	0.093
VOC	--	0.019	0.232	1.018

Hazardous Air Pollutant (HAP) Potential Emissions

Pollutant	Emission Factor (lb/MMscf)[a]	Potential Emissions (lb/hr)[c]	Potential Emissions (tons/yr)[d]
HAPs:			
3-Methylchloranthrene	1.80E-06	2.00E-08	8.77E-08
7,12-Dimethylbenz(a)anthracene	1.60E-05	1.78E-07	7.79E-07
Acenaphthene	1.80E-06	2.00E-08	8.77E-08
Acenaphthylene	1.80E-06	2.00E-08	8.77E-08
Anthracene	2.40E-06	2.67E-08	1.17E-07
Benz(a)anthracene	1.80E-06	2.00E-08	8.77E-08
Benzene	2.10E-03	2.33E-05	1.02E-04
Benzo(a)pyrene	1.20E-06	1.33E-08	5.84E-08
Benzo(b)fluoranthene	1.80E-06	2.00E-08	8.77E-08
Benzo(g,h,i)perylene	1.20E-06	1.33E-08	5.84E-08
Benzo(k)fluoranthene	1.80E-06	2.00E-08	8.77E-08
Chrysene	1.80E-06	2.00E-08	8.77E-08
Dibenzo(a,h) anthracene	1.20E-06	1.33E-08	5.84E-08
Dichlorobenzene	1.20E-03	1.33E-05	5.84E-05
Fluoranthene	3.00E-06	3.34E-08	1.46E-07
Fluorene	2.80E-06	3.11E-08	1.36E-07
Formaldehyde	7.50E-02	8.34E-04	3.65E-03
Hexane	1.80E+00	2.00E-02	8.77E-02
Indo(1,2,3-cd)pyrene	1.80E-06	2.00E-08	8.77E-08
Phenanthrene	1.70E-05	1.89E-07	8.28E-07
Pyrene	5.00E-06	5.56E-08	2.43E-07
Toluene	3.40E-03	3.78E-05	1.66E-04
Arsenic	2.00E-04	2.22E-06	9.74E-06
Beryllium	1.20E-05	1.33E-07	5.84E-07
Cadmium	1.10E-03	1.22E-05	5.36E-05
Chromium	1.40E-03	1.56E-05	6.82E-05
Cobalt	8.40E-05	9.34E-07	4.09E-06
Lead	5.00E-04	5.56E-06	2.43E-05
Manganese	3.80E-04	4.22E-06	1.85E-05
Mercury	2.60E-04	2.89E-06	1.27E-05
Nickel	2.10E-03	2.33E-05	1.02E-04
Selenium	2.40E-05	2.67E-07	1.17E-06
Polycyclic Organic Matter:			
Methylnaphthalene (2-)	2.40E-05	2.67E-07	1.17E-06
Naphthalene	6.10E-04	6.78E-06	2.97E-05
Total HAP		**2.10E-02**	**9.20E-02**

[a] Emission factors from AP-42 Section 1.4 "Natural Gas Combustion" Tables 1.4-1, 1.4-2, & 1.4-3

[b] Manufacturer data sheet. See attached vendor information

[c] Emission Rate (lb/hr) = Rated Capacity (MMscf/hr) × Emission Factor (lb/MMscf).

[d] Annual Emissions $(\text{tons/yr})_{\text{Potential}} = (\text{lb/hr})_{\text{Emissions}} \times$ (Maximum Allowable Operating Hours, 8760 hr/yr) × (1 ton/2000 lb).

MarkWest Liberty Midstream & Resources L.L.C.
Sherwood Gas Plant

Emergency Flare
(FL-991)

Source Designation:	
Manufacturer:	Exterran
Year Installed	~2015
Operating Hours: (hr/yr)	8,760
Flow Rate per Pilot (scfm)	1.26
Number of Pilots	6.00
Pilot Gas Volume (scfm)	7.56
Purge Gas Volume (scfm)	11.48
Annual Fuel Use (MMBtu/yr)	11,248
Annual Fuel Use (mmscf/yr)	10.0
Fuel Consumption (mmscf/hr):	1.1E-03
Fuel HHV (Btu/scf)	1,124

Criteria and Manufacturer Specific Pollutant Emission Rates

Pollutant	Emission Factor (lb/MMscf)[a]	Potential Emissions (lb/hr)[b]	(tons/yr)[c]
NO_x	100	0.114	0.500
CO	84	0.096	0.420
SO_2	0.6	0.001	0.003
PM Total	7.6	0.009	0.038
PM Condensable	1.9	0.002	0.010
PM_{10} (Filterable)	5.7	0.007	0.029
$PM_{2.5}$ (Filterable)	5.7	0.007	0.029
VOC	5.5	0.006	0.028

[a] Emission factors from AP-42 Section 1.4 "Natural Gas Combustion" Tables 1.4-1.

[b] Emission Rate (lb/hr) = Rated Capacity (MMscf/hr) × Emission Factor (lb/MMscf).

[c] Annual Emissions $(tons/yr)_{Potential} = (lb/hr)_{Emissions} \times$ (Maximum Allowable Operating Hours, 8760 hr/yr) × (1 ton/2000 lb).

MarkWest Liberty Midstream & Resources L.L.C.
Sherwood Gas Plant

Blowdowns

VOC and HAP Vented Blowdown Emissions

Blowdown Emissions Sources	Number of Units	Vented Gas Volume Per Blowdown Event (scf)	Number of Blowdown Events per year	Total Volume NG Emitted (scf/yr)	Flare Control Efficiency (%)	Potential VOC Emissions (tpy)	Potential HAP Emissions (tpy)
Engines	3	2,200	36	237,600	0	1.03	0.049
Sherwood I	1	250,000	4	1,000,000	98	0.09	0.004
Sherwood II & III	2	250,000	4	2,000,000	98	0.17	0.008
Sherwood IV, V, VI	3	250,000	4	3,000,000	98	0.26	0.012
Sherwood VII, VIII, IX	3	250,000	4	3,000,000	98	0.26	0.012
Total						**1.8**	**0.087**

Density of natural gas: 0.05 lb/ft^3 @ STP (www.engineeringtoolbox.com)

EPA Protocol for Equipment Leak Emissions

Valves in Gas Service (Gas, Oil and Gas Prod Operations [includes gas processing])

LDAR 500 ppm and quarterly monitoring
(consistent with Subpart OOOO)

Table 2-4, Oil and Gas Production Operations Average Emission Factors
0.0045 Average Leak Rate (kg/hr/source)

Table 5-7, Eqns Relating ALR to LKFRAC at O&G Production Operations
ALR = (0.070 * LKFRAC) + 0.0000091
LKFRAC = (ALR - 0.0000091) / 0.070

Table G-3, Refineries values (none available for oil or gas production)

1	FR	Fix Rate Fraction
0	R	Recurrence Rate Fraction
0.02	Oc	Occurrence Rate Fraction

0.24 Z1 Initial Leak Fraction (From LKFRAC Eqtn in Table 5.7)

Immediate Post LDAR Leak Fraction % = Y1

Subsequent Iterations
Yi = Zi - (FR * Zi) + (FR * Zi * R)
Z(i+1) = Oc * (1 - Yi) + Yi

Leak Fraction

	1	2	3	4	5	6	7
Z	0.02	0.02	0.02	0.02	0.02	0.02	0.02
Y	0.00	0	0	0	0	0	0
Average	0.01	0.01	0.01	0.01	0.01	0.01	0.01

Average Leak Rate

	1	2	3	4	5	6	7
Leak Rate	0.000709	0.000709	0.000709	0.000709	0.000709	0.000709	0.000709

0.000709 LDAR Final Average Leak Rate (kg/hr/source)
0.001563 lb/hr/source
84.24222 LDAR Control Effectiveness

EPA Protocol for Equipment Leak Emissions

Valves in Light Liquid Service (Gas, Oil and Gas Prod Operations [includes gas processing])

LDAR 500 ppm and quarterly monitoring
(consistent with Subpart OOOO)

Table 2-4, Oil and Gas Production Operations Average Emission Factors
0.0025 Average Leak Rate (kg/hr/source)

Table 5-7, Eqns Relating ALR to LKFRAC at O&G Production Operations
ALR = (0.059 * LKFRAC) + 0.0000094
LKFRAC = (ALR - 0.0000094) / 0.059

Table G-3, Refineries values (none available for oil or gas production)

1	FR	Fix Rate Fraction
0	R	Recurrence Rate Fraction
0.02	Oc	Occurrence Rate Fraction

0.285 Z1 Initial Leak Fraction (From LKFRAC Eqtn in Table 5.7)

Immediate Post LDAR Leak Fraction % = Y1

Subsequent Iterations
Yi = Zi - (FR * Zi) + (FR * Zi * R)
Z(i+1) = Oc * (1 - Yi) + Yi

Leak Fraction

	1	2	3	4	5	6	7
Z	0.02	0.02	0.02	0.02	0.02	0.02	0.02
Y	0	0	0	0	0	0	0
Average	0.01	0.01	0.01	0.01	0.01	0.01	0.01

Average Leak Rate

	1	2	3	4	5	6	7
Leak Rate	0.000599	0.000599	0.000599	0.000599	0.000599	0.000599	0.000599

0.000599 LDAR Final Average Leak Rate (kg/hr/source)
0.001321 lb/hr/source
76.024 LDAR Control Effectiveness

EPA Protocol for Equipment Leak Emissions

Connectors in Gas and Light Liquid Service (Gas, Oil and Gas Prod Operations [includes gas processing])

LDAR 500 ppm and quarterly monitoring
(consistent with Subpart OOOO)

Table 2-4, Oil and Gas Production Operations Average Emission Factors
0.0002 Average Leak Rate (kg/hr/source)

Table 5-7, Eqns Relating ALR to LKFRAC at O&G Production Operations
ALR = (0.070 * LKFRAC) + 0.0000091
LKFRAC = (ALR - 0.0000091) / 0.070

Table G-3, Refineries values (none available for oil or gas production)

1	FR	Fix Rate Fraction
0	R	Recurrence Rate Fraction
0.005	Oc	Occurrence Rate Fraction

0.017 Z1 Initial Leak Fraction (From LKFRAC Eqtn in Table 5.7)

Immediate Post LDAR Leak Fraction % = Y1

Subsequent Iterations
Yi = Zi - (FR * Zi) + (FR * Zi * R)
Z(i+1) = Oc * (1 - Yi) + Yi

Leak Fraction

	1	2	3	4	5	6	7
Z	0.005	0.005	0.005	0.005	0.005	0.005	0.005
Y	0.00	0	0	0	0	0	0
Average	0.0025	0.0025	0.0025	0.0025	0.0025	0.0025	0.0025

Average Leak Rate

	1	2	3	4	5	6	7
Leak Rate	0.000184	0.000184	0.000184	0.000184	0.000184	0.000184	0.000184

0.000184 LDAR Final Average Leak Rate (kg/hr/source)
0.000406 lb/hr/source
7.95 LDAR Control Effectiveness

EPA Protocol for Equipment Leak Emissions

Pumps in Light Oil Service (Gas, Oil and Gas Prod Operations [includes gas processing])

LDAR 10,000 ppm and quarterly monitoring

Table 2-4, Oil and Gas Production Operations Average Emission Factors
0.013 Average Leak Rate (kg/hr/source)

Table 5-7, Eqns Relating ALR to LKFRAC at Oil and Gas Production Operations
ALR = (0.1 * LKFRAC) + 0.00051
LKFRAC = (ALR - 0.00051) / 0.1

Table G-3, Refineries values (none available for oil or gas production)

1	FR	Fix Rate Fraction
0	R	Recurrence Rate Fraction
0.1	Oc	Occurrence Rate Fraction

24 Z1 Initial Leak Fraction (From LKFRAC Eqtn in Table 5.7)

Immediate Post LDAR Leak Fraction % = Y1

Subsequent Iterations
Yi = Zi - (FR * Zi) + (FR * Zi * R)
Z(i+1) = Oc * (1 - Yi) + Yi

Leak Fraction

	1	2	3	4	5	6	7
Z	0.1	0.1	0.1	0.1	0.1	0.1	0.1
Y	0	0	0	0	0	0	0
Average	0.05	0.05	0.05	0.05	0.05	0.05	0.05

Average Leak Rate

	1	2	3	4	5	6	7
Leak Rate	0.004925	0.004925	0.004925	0.004925	0.004925	0.004925	0.004925

0.004925 LDAR Final Average Leak Rate (kg/hr/source)
0.010855 lb/hr/source
62.11538 LDAR Control Effectiveness

MarkWest Liberty Midstream & Resources L.L.C.
Sherwood Gas Plant

Fugitive Emissions from Component Leaks

Component	Service Type	Component Count	TOC Emission Factor[2] (kg/hr/component)	Average NG Leak Rate (lb/hr)	NG Leak Rate (tpy)	VOC Wt%[3]	HAP Wt %	Potential VOC Emissions (tpy)	Potential HAP Emissions (tpy)
Connectors	Gas	1,800	1.84E-04	7.30E-01	3.84E+00	11.48%	0.18%	4.40E-01	6.76E-03
Flanges	Gas	1,350	3.90E-04	1.16E+00	6.10E+00	11.48%	0.18%	7.00E-01	1.07E-02
Open-Ended Lines	Gas	0	2.00E-03	0.00E+00	0.00E+00	11.48%	0.18%	0.00E+00	0.00E+00
Pump Seals	Gas	0	2.40E-03	0.00E+00	0.00E+00	11.48%	0.18%	0.00E+00	0.00E+00
Valves	Gas	1,800	7.09E-04	2.81E+00	1.48E+01	11.48%	0.18%	1.70E+00	2.60E-02
Other[1]	Gas	54	8.80E-03	1.05E+00	5.51E+00	11.48%	0.18%	6.32E-01	9.70E-03
Connectors	Light Oil	1,500	1.84E-04	6.08E-01	3.20E+00	96.72%	1.05%	3.09E+00	3.37E-02
Flanges	Light Oil	1,000	1.10E-04	2.43E-01	1.27E+00	96.72%	1.05%	1.23E+00	1.34E-02
Open-Ended Lines	Light Oil	0	1.40E-03	0.00E+00	0.00E+00	96.72%	1.05%	0.00E+00	0.00E+00
Pump Seals	Light Oil	20	4.93E-03	2.17E-01	1.14E+00	96.72%	1.05%	1.10E+00	1.20E-02
Valves	Light Oil	1,500	5.99E-04	1.98E+00	1.04E+01	96.72%	1.05%	1.01E+01	1.10E-01
Other[1]	Light Oil	0	7.50E-03	0.00E+00	0.00E+00	96.72%	1.05%	0.00E+00	0.00E+00
			Total	**8.8**	**46.3**			**18.969**	**0.222**

1. "Other" equipment types include compressor seals, relief valves, diaphragms, drains, meters, etc.

2. *Table 2-4 :Oil & Gas Production Operations Average Emission Factors*, Protocol for Equipment Leak Emission Estimates, EPA 453/R-95-017, November 1995. Emission factors based on average measured TOC from component types indicated in gas service at O&G Production Operations.

3. VOC and HAP weight percent based on representative gas analysis December 2013. Light Oil Wt% from analysis of liquids. All C6+ components assumed to be hazardous air pollutants for a conservative emissions estimate.

ATTACHMENT O: MONITORING/RECORDKEEPING/REPORTING/TESTING PLANS

MarkWest Liberty Midstream & Resources L.L.C. is not submitting any proposed plans other than those recommendations noted in Emissions Unit Data Sheets (Attachment L).

ATTACHMENT P: PUBLIC NOTICE

MarkWest Liberty Midstream & Resources L.L.C. has published a public notice in *The Herald Record* newspaper, headquartered in Doddridge County, WV. This paper serves the geographical area surrounding the proposed facility.

The affidavit issued by the paper showing the date of publication and the actual text is attached following the proposed text:

AIR QUALITY PERMIT NOTICE

Notice of Application

Notice is given that MarkWest Liberty Midstream & Resources L.L.C. has applied to the West Virginia Department of Environmental Protection, Division of Air Quality, for an Administrative Amendment II to the Sherwood Gas Plant located in Doddridge County, West Virginia. The amendment will allow for two processing trains with associated heaters. From Smithburg: Take US-50 East and go 2.8 miles. Turn right at Co. Route 50/35 and go 0.1 miles. Take the 1st right onto Blacklick Rd/Co Route 15/Sherwood-Greenbrier Rd and continue 0.4 miles. Site will be 0.5 miles west of Co Route 15.

The applicant estimates the increases in potential to discharge for the following Regulated Air Pollutants will be:

Nitrogen Oxides (NOx)	29.60 tons/yr
Carbon Monoxide (CO)	34.31 tons/yr
Volatile Organic Compounds (VOC)	-10.33 tons/yr
Particulate Matter (PM)	7.73 tons/yr
Sulfur Dioxide (SO_2)	0.45 tons/yr
Total HAPs	1.21 tons/yr

Startup of operation is planned to begin in Spring and Fall 2013. Written comments will be received by the West Virginia Department of Environmental Protection, Division of Air Quality, 601 57th Street, SE, Charleston, WV 25304, for at least 30 calendar days from the date of publication of this notice. Any questions regarding this permit application should be directed to the DAQ at (304) 926-0499, extension 1227, during normal business hours.

Dated this the 5th day of December, 2014

By: MarkWest Liberty Midstream & Resources L.L.C.
Leanne Meyer
VP EH&S
1515 Arapahoe St.
Tower 1, Suite 1600
Denver, CO. 80202-2137

ATTACHMENT Q: CLAIMS OF CONFIDENTIALITY

MarkWest Liberty Midstream & Resources L.L.C. makes no claim of business confidentiality associated with this application.

ATTACHMENT R: AUTHORITY FORMS

Not applicable

APPLICATION FEE

Per 45CSR13 and 45CSR22, Title 45, Series 22, Section 3.4.a, a fee of $1,000 must be submitted for the construction permit application fee and $1,000 for the NSPS Requirements fee, respectively. A check for $2,000 is included in this application.

APPENDIX A: SUPPORT DOCUMENTS

Heater Specification Sheets.

Flare Specification Sheet

DI-H-1782

Deethanizer Hmo Htr ~~H-1782~~

Optimized Process Furnaces, Inc.
Proposal No. 2011-066, Revision 1
01/20/2012

PURCHASER / OWNER: Thomas Russell Co. / MarkWest Energy				ITEM NO.: H-1782			
SERVICE: HMO Heater				LOCATION: Unknown			
1	UNIT			* NUMBER REQUIRED: 1			REV
2	MANUFACTURER: OPTIMIZED PROCESS FURNACES			REFERENCE: 2011-066, Revision 1			
3	TYPE OF HEATER: VERTICAL CYLINDRICAL						
4	* TOTAL HEATER ABSORBED DUTY, MM BTU / HR:	86.6 X 1.10% = 97.5					
5	**PROCESS DESIGN CONDITIONS**						
6	* OPERATING CASE	DESIGN					
7	HEATER SECTION						
8	* SERVICE	HOT OIL					
9	HEAT ABSORPTION, MM BTU / HR.	86.6 X 1.10% = 97.5					
10	* FLUID	THERMINOL 55					
11	* FLOW RATE, LB/HR	1,571,805 X 1.10%					
12	* FLOW RATE, B.P.D.						
13	* PRESSURE DROP, ALLOWABLE (CLEAN / FOULED), PSI.	45					
14	PRESSURE DROP, CALCULATED (CLEAN / FOULED), PSI.	42					
15	* AVG. RAD. SECT. FLUX DENSITY, ALLOW. BTU /HR-FT2.	12000					
16	AVG. RAD. SECT. FLUX DENSITY, CALC., BTU/ HR-FT2.	12000					
17	MAX. RAD. SECT. FLUX DENSITY, BTU / HR - FT2.	21600					
18	CONV. SECT. FLUX DENSITY, (BARE TUBE), BTU / HR - FT2.						
19	* VELOCITY LIMITATION, FPS.						
20	PROCESS FLUID MASS VELOCITY, LB / SEC - FT2.	500					
21	* MAXIMUM ALLOW. / CALC. INSIDE FILM TEMPERATURE, F.	417					
22	* FOULING FACTOR, HR - FT2 - F / BTU.	0.005					
23	* COKING ALLOWANCE, IN.						
24	**INLET CONDITIONS**						
25	* TEMPERATURE, F.	350					
26	* PRESSURE, (PSIG)	110					
27	* LIQUID FLOW, LB / HR	1,571,805 X 1.10%					
28	* VAPOR FLOW, LB / HR	0					
29	* DENSITY #/FT3	55.1					
30	* VAPOR MOLECULAR WEIGHT	0					
31	* VISCOSITY, (LIQUID / VAPOR), CP.	1.8					
32	* SPECIFIC HEAT, (LIQUID / VAPOR), BTU / LB - F.	0.524					
33	* THERMAL CONDUCTIVITY, (LIQUID / VAPOR), BTU / HR - FT F.	0.0853					
34	**OUTLET CONDITIONS**						
35	* TEMPERATURE, F.	365					
36	* PRESSURE, (PSIG)	68					
37	* LIQUID FLOW, LB / HR	1,729,985					
38	* VAPOR FLOW, LB / HR	0					
39	* DENSITY #/FT3	52.2					
40	* VAPOR MOLECULAR WEIGHT	0					
41	* VISCOSITY, (LIQUID / VAPOR), CP.	0.739					
42	* SPECIFIC HEAT, (LIQUID / VAPOR), BTU / LB - F.	0.55					
43	* THERMAL CONDUCTIVITY, (LIQUID / VAPOR), BTU / HR - FT F.	0.0925					
44	**REMARKS AND SPECIAL REQUIREMENTS:**						
45	* DISTILLATION DATA OR FEED COMPOSITION:						
46	SHORT TERM OPERATING CONDITIONS						
47							
48	NOTES:						
49							
50							
51							
52							

FIRED HEATER DATA SHEET		PROPOSAL NO.:	2011-066, Revision 1
OPF, Inc.	REV: 1	DATE: 01/20/2012	SHEET 1 OF 8

COMBUSTION DESIGN CONDITIONS

		DESIGN			REV
1	OPERATING CASE				
2	* TYPE OF FUEL	GAS			
3	* EXCESS AIR, PERCENT.	15			
4	CALCULATED HEAT RELEASE (LHV), MM BTU / HR.	113.2			
5	FUEL EFFICIENCY CALCULATED, PERCENT (LHV)	86			
6	FUEL EFFICIENCY GUARANTEED, PERCENT (LHV)	85			
7	RADIATION LOSS, PERCENT OF HEAT RELEASE (LHV)	1.5			
8	FLUE GAS TEMPERATURE LEAVING: RADIANT SECTION, F.	1535			
9	CONVECTION SECTION, F.	580			
10	AIR PREHEATER, F.	-			
11	FLUE GAS QUANTITY, LB / HR	119,229			
12	FLUE GAS MAS VELOCITY THRU CONV. SECTION, LB / SEC-FT2	0.48			
13	DRAFT: AT ARCH, IN-H20	0.1			
14	AT BURNERS, IN-H20	0.63			
15	* AMBIENT AIR TEMPERATURE, EFFICIENCY CALCULATION, F.	80			
16	* AMBIENT AIR TEMPERATURE, STACK DESIGN, F.	80			
17	* ALTITUDE ABOVE SEA LEVEL, FT	1300			
18	VOLUMETRIC HEAT RELEASE (LHV), BTU / HR - FT3	7540			
19	* REQUIRED EMMISSIONS: PPMV @ (CORRECTED TO 3% O2)				
20	LB / MMBTU (LHV) (HHV)				

FUEL CHARACTERISTICS:

21							
22	* GAS TYPE		* LIQUID TYPE		* OTHER TYPE		
23	* LHV, BTU / (LB) (SCF)		* LHV, BTU / (LB) (SCF)		* LHV, BTU / (LB) (SCF)		
24	* HHV, BTU / (LB) (SCF)		* HHV, BTU / (LB) (SCF)		* HHV, BTU / (LB) (SCF)		
25	* PRESS. @ BURNER, PSIG		* PRESS. @ BURNER, PSIG		* PRESS. @ BURNER, PSIG		
26	* TEMP. @ BURNER, F		* TEMP. @ BURNER, F		* TEMP. @ BURNER, F		
27	MOLECULAR WEIGHT		* VISCOSITY @ F, SSU				
28			* ATOMIZING STEAM TEMP, F				
29			* PRESSURE, PSIG				
30	COMPOSITION	MOLE %	COMPOSITION	WT%	COMPOSITION	%	
31							
32							
33							
34							
35							
36							
37							

BURNER DATA:

38							
39	MANUFACTURER: CALLIDUS	SIZE / MODEL NO.: CUB-12W			NUMBER:	8	
40	TYPE: ULTRA LOW NOX	LOCATION: FLOOR			TURNDOWN RATIO:	3 TO 1	
41	HEAT RELEASE PER BURNER, MMBTU / HR:	DESIGN:	14.8		NORMAL:	14.2	
42	PRESSURE DROP ACROSS BURNER @ DESIGN HEAT RELEASE, IN H20:		0.63				
43	DISTANCE BURNER CENTER LINE TO TUBE CENTER LINE, HORIZONTAL, IN.:		63		VERTICAL, IN.:	864	
44	DISTANCE BURNER CENTER LINE TO UNSHIELDED REFRACTORY, HORIZ, IN.:				VERTICAL, IN.:	630	
45	* PILOT, TYPE: GAS	CAPACITY, BTU / HR:					
46	* IGNITION METHOD: ELECTRIC				NUMBER:		
47	* FLAME DETECTION, TYPE:						
48	NOTES:						
49							
50							
51							
52							

FIRED HEATER DATA SHEET		PROPOSAL NO.:	2011-068, Revision 1
OPF, Inc.	REV: 1	DATE: 01/20/2012	SHEET 2 OF 8

	MECHANICAL DESIGN CONDITIONS					REV
1	* PLOT LIMITATIONS:		* STACK LIMITATIONS:			
2	* TUBE LIMITATIONS:		* NOISE LIMITATIONS:			
3	* STRUCTURAL DESIGN DATA: WIND VELOCITY:		* WIND OCCURENCE FACTOR:			
4	* SNOW LOAD:		* SEISMIC ZONE:			
5	* MINIMUM / NORMAL / MAXIMUM AMBIENT AIR TEMPERATURE, F:		* RELATIVE HUMIDITY %:			
6	HEATER SECTION:	RADIANT	SHOCK	CONVECTION		
7	SERVICE:					
8	**COIL DESIGN:**					
9	* DESIGN BASIS: TUBE WALL THICKNESS (CODE OR SPECIFICATION):	API RP530				
10	RUPTURE STRENGTH (MINIMUM OR AVERAGE):					
11	* STRESS - TO - RUPTURE BASIS, HR.	100,000				
12	* DESIGN PRESSURE, ELASTIC / RUPTURE, PSIG.	150	150	150		
13	* DESIGN FLUID TEMPERATURE, F.					
14	* TEMPERATURE ALLOWANCE, F.	35 MIN				
15	CORROSION ALLOWANCE, TUBES / FITTINGS, IN.	0.125	0.125	0.125		
16	HYDROSTATIC TEST PRESSURE, PSIG.	250				
17	* POST WELD HEAT TREATMENT, (YES or NO)	NO				
18	* PERCENT OF WELDS FULLY RADIOGRAPHED	10				
19	MAXIMUM (CLEAN) TUBE METAL TEMPERATURE, F.	452				
20	DESIGN TUBE METAL TEMPERATURE, F.	500				
21	INSIDE FILM COEFFICIENT, BTU / HR FT2 - F.	343				
22	**COIL ARRANGEMENT:**					
23	TUBE ORIENTATION: VERTICAL or HORIZONTAL	VERTICAL	HORIZONTAL	HORIZONTAL		
24	* TUBE MATERIAL (ASTM SPECIFICATION OR GRADE)	A106 GR B	A106 GR B	A106 GR B		
25	TUBE OUTSIDE DIAMETER, IN.	6.625	6.625	6.625		
26	TUBE WALL THICKNESS, (MINIMUM) (AVERAGE), IN.	0.28	0.28	0.28		
27	NUMBER OF FLOW PASSES	4	4	4		
28	NUMBER OF TUBES	80	16	40		
29	NUMBER OF TUBES PER ROW (CONVECTION SECTION)		8	8		
30	OVERALL TUBE LENGTH, FT.	50.00	20.00	20.00		
31	EFFECTIVE TUBE LENGTH, FT.	51.50	19.00	19.00		
32	BARE TUBES: NUMBER	80	16	-		
33	TOTAL EXPOSED SURFACE, FT2.	5904	264	(1) -	6528	
34	EXTENDED SURFACE TUBES: NUMBER	-	-	40		
35	TOTAL EXPOSED SURFACE, FT2.	-	-	15,960		
36	TUBE LAYOUT (IN-LINE or STAGGERED)	IN-LINE	STAGGERED	STAGGERED		
37	TUBE SPACING, CENT. TO CENT.: HORIZ.x DIAG. (OR VERT.)	12	12	12		
38	SPACING TUBE CENT. TO FURNACE WALL, (MIN.), IN.	9	9	9		
39	CORBELS (YES or NO)			YES		
40	CORBEL WIDTH, IN.					
41	**DESCRIPTION OF EXTENDED SURFACE:**					
42	TYPE: (STUDS) (SERRATED FINS) (SOLID FINS)			SEG FIN		
43	MATERIAL			CS		
44	DIMENSIONS (HEIGHT x DIAMETER / THICKNESS), IN.			1 X .080		
45	SPACING (FINS / IN) (STUDS / PLANE)			5		
46	MAXIMUM TIP TEMPERATURE, (CALCULATED), F.			<850 F		
47	EXTENSION RATIO (TOTAL AREA / BARE AREA)			-1		
48	**PLUG TYPE HEADERS:**					
49	* TYPE					
50	MATERIAL (ASTM SPECIFICATION AND GRADE)					
51	NOMINAL RATING					
52	* LOCATION (ONE OR BOTH ENDS)					
53	WELDED OR ROLLED JOINTS					
54	NOTES: (1) BOTTOM BARE ROW INCLUDED IN RADIANT SECTION SURFACE					
55						
56						
57						
58						

FIRED HEATER DATA SHEET		PROPOSAL NO.:	2011-086, Revision 1
OPF, Inc.	REV: 1	DATE: 01/20/2012	SHEET 3 OF 8

	MECHANICAL DESIGN CONDITIONS (Continued)					REV
1	HEATER SECTION	RADIANT	SHOCK	CONVECTION		
2	SERVICE					
3	**RETURN BENDS:**					
4	TYPE	U-BEND	U-BEND	U-BEND		
5	MATERIAL (ASTM SPECIFICATION AND GRADE)	A234 WPB	A234 WPB	A234 WPB		
6	NOMINAL RATING OR SCHEDULE	40	40	40		
7	* LOCATION (FB=FIREBOX, HB=HEADERBOX)	FIREBOX	HEADER BOX	HEADER BOX		
8	**TERMINALS AND / OR MANIFOLDS:**					
9	* TYPE (BEV=BEVELED, MANF=MANIFOLD, FLG=FLANGED	FLANGED		FLANGED		
10	INLET: MATERIAL (ASTM SPECIFICATION AND GRADE)			A106 GRB		
11	SIZE / SCHEDULE OR THICKNESS					
12	NUMBER OF TERMINALS			4		
13	FLANGE MATERIAL (ASTM SPECIFICATION AND GRADE)			A105		
14	FLANGE SIZE AND RATING			300#		
15	OUTLET: MATERIAL (ASTM SPECIFICATION AND GRADE)	A106 GRB				
16	SIZE / SCHEDULE OR THICKNESS					
17	NUMBER OF TERMINALS	4				
18	FLANGE MATERIAL (ASTM SPECIFICATION AND GRADE)	A105				
19	FLANGE SIZE AND RATING	300#				
20	* MANIFOLD TO TUBE CONNECTION (WELDED, EXTRUDED, ETC.)					
21	MANIFOLD LOCATION (INSIDE OR OUTSIDE HEADER BOX)	BY OTHERS		BY OTHERS		
22	**CROSSOVERS:**					
23	* WELDED OR FLANGED		WELDED			
24	* PIPE MATERIAL (ASTM SPECIFICATION AND GRADE)		A106 GRB			
25	PIPE SIZE / SCHEDULE OR THICKNESS		40			
26	* FLANGE MATERIAL		NONE			
27	FLANGE SIZE AND RATING		NONE			
28	* LOCATION (INTERNAL / EXTERNAL)		EXTERNAL			
29	FLUID TEMPERATURE, F.					
30	**TUBE SUPPORTS:**					
31	LOCATION (ENDS, TOP, BOTTOM)	TOP	ENDS	ENDS		
32	MATERIAL (ASTM SPECIFICATION AND GRADE)	25%CR 20%NI	A36	A36		
33	DESIGN METAL TEMPERATURE, F.					
34	THICKNESS, IN. (MIN.)		1/2	1/2		
35	TYPE AND THICKNESS OF INSULATION, IN.		4" LHV	4" LHV		
36	ANCHOR (MATERIAL AND TYPE)					
37	**INTERMEDIATE TUBE SUPPORTS:**	ONE				
38	MATERIAL (ASTM SPECIFICATION AND GRADE)	25%CR 20%NI				
39	DESIGN METAL TEMPERATURE, F.					
40	THICKNESS, IN. (MIN.)					
41	SPACING, FT.					
42	**TUBE GUIDES:**					
43	LOCATION	BOTTOM				
44	MATERIAL (ASTM SPECIFICATION AND GRADE)	25%CR 20%NI				
45	TYPE / SPACING, FT.					
46	**HEADER BOXES:**					
47	LOCATION: CONVECTION ENDS		HINGED DOOR / BOLTED PANEL; BOLTED PANEL			
48	CASING MATERIAL: A36		THICKNESS, IN.	3/16		
49	LINING MATERIAL: 1" -8# CERAMIC FIBER		THICKNESS, IN.		1	
50	ANCHOR (MATERIAL AND TYPE) 304 SS					
51	NOTES:					
52						
53						
54						

FIRED HEATER DATA SHEET		PROPOSAL NO.:	2011-066, Revision 1
OPF, Inc.	REV: 1	DATE: 01/20/2012	SHEET 4 OF 6

MECHANICAL DESIGN CONDITIONS (Continued)

							REV
1	**REFRACTORY DESIGN BASIS:**						
2	AMBIENT, F:80	WIND VELOCITY, MPH / FPS		CASING TEMP., F.			
3	**EXPOSED VERTICAL WALLS: (NONE)**						
4	LINING THICKNESS, IN.:		HOT FACE TEMPERATURE, DESIGN / CALCULATED, F:				
5	WALL CONSTRUCTION:						
6							
7	ANCHOR (MATERIAL & TYPE):						
8	CASING MATERIAL:		THICKNESS, IN.:	TEMPERATURE, F.			
9	**SHIELDED VERTICAL WALLS:**						
10	LINING THICKNESS, IN.: 3"		HOT FACE TEMPERATURE, DESIGN / CALCULATED, F: 2300F/ 840				
11	WALL CONSTRUCTION: 1" -8# CERAMIC FIBER + 2" - 8# CERAMIC FIBER						
12							
13	ANCHOR (MATERIAL & TYPE): 304 SS						
14	CASING MATERIAL: A36		THICKNESS, IN.: 1/4"	TEMPERATURE, F.	180 F		
15	**ARCH:**						
16	LINING THICKNESS, IN.: 4		HOT FACE TEMPERATURE, DESIGN / CALCULATED, F: 2300/ 1530				
17	WALL CONSTRUCTION: 2" - 8# CERAMIC FIBER + 2" - 8# CERAMIC FIBER						
18							
19	ANCHOR (MATERIAL & TYPE): 310 SS						
20	CASING MATERIAL: A36		THICKNESS, IN.: 1/4"	TEMPERATURE, F.	180 F		
21	**FLOOR:**						
22	LINING THICKNESS, IN.: 8		HOT FACE TEMPERATURE, DESIGN / CALCULATED, F: 2300 / 1530				
23	FLOOR CONSTRUCTION: 8" 1:24 L.H.V. CASTABLE						
24							
25	CASING MATERIAL: A36						
26	MIN. FLOOR ELEVATION, FT.			FREE SPACE BELOW PLENUM, FT:			
27	**CONVECTION SECTION:**						
28	LINING THICKNESS, IN.: 3		HOT FACE TEMPERATURE, DESIGN / CALCULATED, F: 2300 / 970				
29	WALL CONSTRUCTION: 1" -8# CERAMIC FIBER + 2" - 8# CERAMIC FIBER						
30							
31	ANCHOR (MATERIAL & TYPE): 304 SS						
32	CASING MATERIAL: A36		THICKNESS, IN.: 3/16	TEMPERATURE, F.	180 F		
33	**INTERNAL WALL:**						
34	TYPE:		MATERIAL:				
35	DIMENSION, HEIGHT / WIDTH:						
36	**DUCTS:**	**FLUE GAS**			**COMBUSTION AIR**		
37	LOCATION	BREECHING					
38	SIZE, FT. OR NET FREE AREA, FT2						
39	CASING MATERIAL						
40	CASING THICKNESS, IN.						
41	LINING: INTERNAL / EXTERNAL						
42	THICKNESS, IN.						
43	MATERIAL						
44	ANCHOR (MATERIAL & TYPE)						
45	CASING TEMPERATURE, F.						
46	**PLENUM CHAMBER (AIR)**						
47	CASTING MATERIAL:		THICKNESS, IN.:	SIZE, FT:			
48	LINING MATERIAL:			THICKNESS, IN.:			
49	ANCHOR (MATERIAL & TYPE)						
50	NOTES:						
51							
52							
53							

MECHANICAL DESIGN CONDITIONS (Continued)

							REV
1	**STACK OR STACK STUB:**						
2	NUMBER:	1	SELF-SUPPORTED OR GUYED:	SELF SUPPORTED	LOCATION: TOP OF CONVECTION		
3	CASING MATERIAL:	A36	* CORROSION ALLOWANCE, IN.:		THICK., IN. (MIN):	1/4"	
4	OUTSIDE METAL DIA., FT.:	7' - 6"	HEIGHT ABOVE GRADE, FT.:		LENGTH, FT.:	80' - 0"	
5	LINING MATERIAL:	NONE			THICKNESS, IN.:	NONE	
6	ANCHOR (MAT'L AND TYPE):		NONE				
7	DESIGN FLUE GAS VEL., FT/S:		FLUE GAS TEMPERATURE, F.:	400			
8	EXTENT OF LINING:	NONE	INTERNAL OR EXTERNAL:	NONE			
9	**DAMPERS:**						
10	LOCATION:		STACK				
11	TYPE (CONTROL, TIGHT SHUT-OFF, ETC.)		CONTROL				
12	MATERIAL: BLADE		CS				
13	SHAFT		CS				
14	MULTIPLE / SINGLE LEAF		MULTIPLE				
15	PROVISION FOR OPERATION (MANUAL OR AUTOMATIC)		WINCH				
16	TYPE OF OPERATOR (CABLE OR PNEUMATIC)		CABLE				
17	**MISCELLANEOUS:**						
18	PLATFORMS: LOCATION	NUMBER	WIDTH	LENGTH	STAIRS / LADDER	ACCESS FROM	
19							
20							
21							
22							
23							
24	TYPE OF FLOORING:						
25	DOORS:	NUMBER	LOCATION	SIZE	BOLTED/HINGED		
26	ACCESS						
27							
28	OBSERVATION						
29							
30	TUBE REMOVAL						
31							
32	INSTRUMENT CONNECTIONS:		NUMBER	SIZE	TYPE		
33	FLUE GAS / COMBUSTION AIR TEMPERATURE						
34	FLUE GAS / COMBUSTION AIR PRESSURE						
35	FLUE GAS SAMPLE						
36	SNUFFING STEAM / PURGE						
37	O2 ANALYZER						
38	CO OR NOX ANALYZER						
39	VENTS / DRAINS						
40	PROCESS FLUID TEMPERATURE						
41	TUBESKIN THERMOCOUPLES						
42							
43							
44	PAINTING REQUIREMENTS:						
45	INTERNAL COATING:						
46	GALVANIZING REQUIREMENTS:						
47	ARE PAINTERS TROLLEY AND RAIL INCLUDED:						
48	SPECIAL EQUIPMENT:	SOOTBLOWERS:					
49	ANCHOR (MATERIAL & TYPE)	AIR PREHEATER:					
50		FANS:					
51		OTHER:					
52	NOTES:						
53							
54							
55							

FIRED HEATER DATA SHEET		PROPOSAL NO.:	2011-066, Revision 1
OPF, Inc.	REV: 1	DATE: 01/20/2012	SHEET 6 OF 8

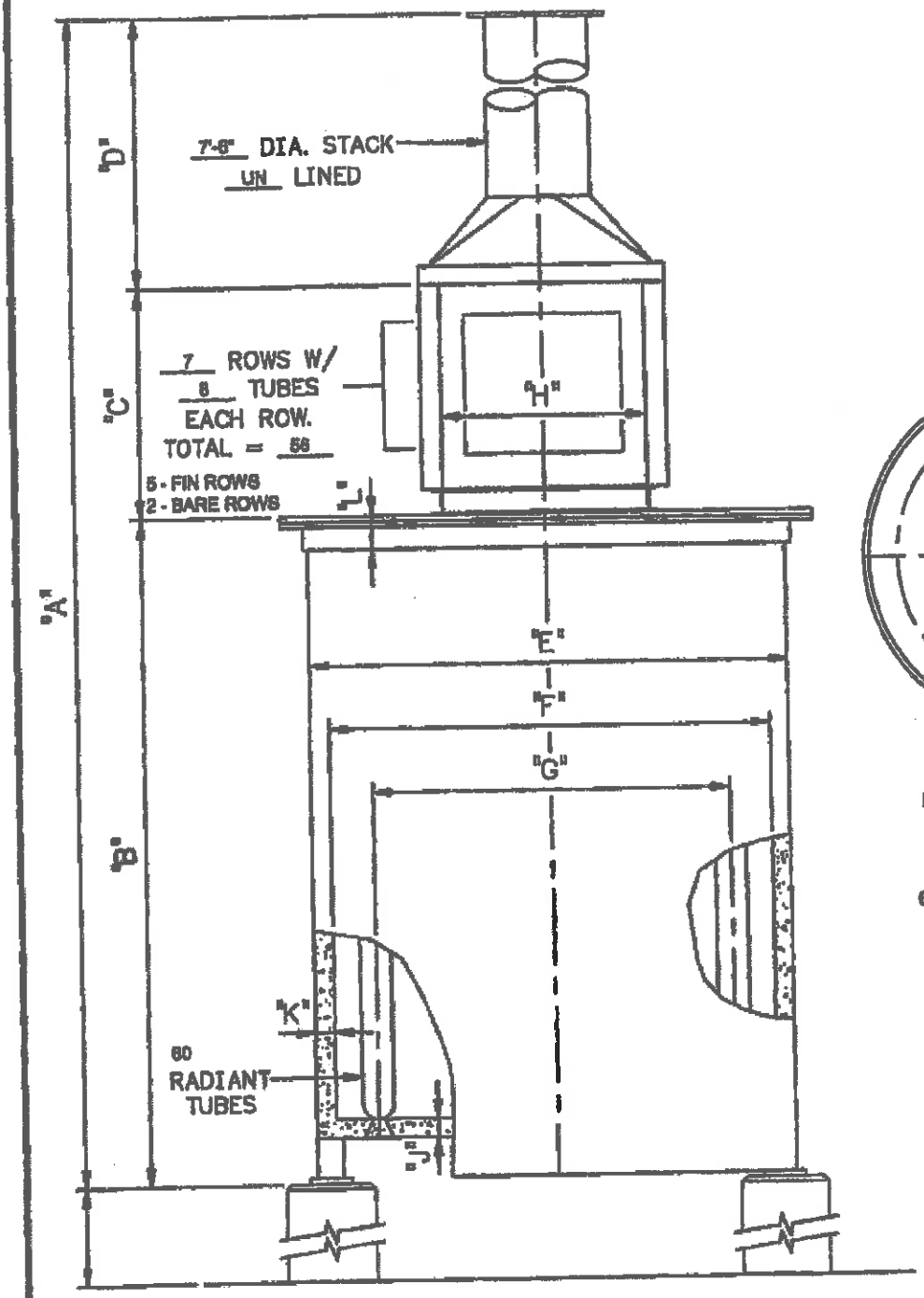

SCHEMATIC FLOW

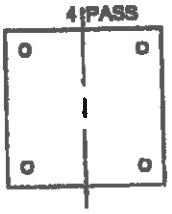

CONVECTION

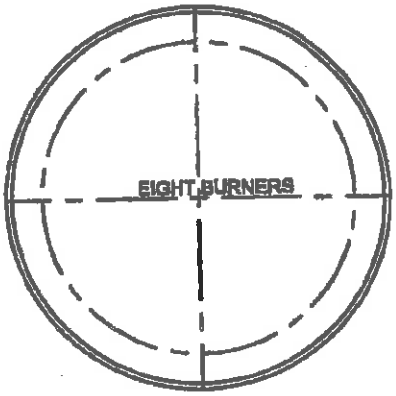

RADIANT
INLETS AND OUTLETS BOTTOM

60 - S.R.R.B.

DIMENSION SCHEDULE

"A"	"B"	"C"	"D"	"E"	"F"	"G"	"H"	"J"	"K"	"L"			
144'-3"	54'-6"	9'-6"	60'-0"	21'-1"	20'-7"	19'-1"	9'-0"	6"	3"				

OPTIMIZED PROCESS FURNACES, INC.
P.O. BOX 706
CHANUTE, KANSAS 66720

TITLE HMO HEATER
ITEM NO. H-1762

PROPOSAL NO. 2011-066, REVISION 1 REV. 1

BURNER PERFORMANCE DATA

Operating Conditions

The burners for this project are designed for the following conditions:

End User: Unknown
Job Site: Unknown
Heater: 2011-066

Burner Model	CUBL-12W
Number of Burners	8
Maximum Heat Release (MMBtu/hr)	14.90
Normal Heat Release (MMBtu/hr)	14.20
Minimum Heat Release (MMBtu/hr)	2.98
Excess Air (%)	15
Available Draft (" W.C.)	0.630
Air Temperature (°F)	Ambient
Bridgewall Temperature (°F)	1,535
Gas Pressure (psig)	25
Estimated Visual Flame Length (Ft.)	25
Estimated Visual Flame Diameter (Ft.)	3.4
Elevation (Ft. ASL)	1,300
Tube Circle Diameter (Ft.)	19.08
Burner Circle Diameter (Ft.)	8.5
Meets API Recommended Clearance?	Yes

Description of CUBL Burner Technology

The Callidus Ultra Blue Burners are the latest technological improvement in NO_x reduction. This advancement has been achieved through the use of special techniques to lower the burner's peak flame temperature. The Ultra Blue "CUBL" burner provides NO_x emissions that are 40-50% lower than the current Ultra Low NO_x burner technologies.

The Callidus Ultra Blue Burner technology combines staged fuel and flue gas recirculation technologies to produce the next generation in NO_x reduction technology. We utilize the pressure "energy" of the primary fuel gas to pull inert flue gases into the combustion zone. This cools the oxidative reaction and produces very low NO_x emissions. Burner mixing is optimized because fuel gas (mixed with inert flue gas) enters the burner throat perpendicular to the incoming combustion air stream. All of these advantageous NO_x reduction features are without the need for expensive post-combustion emission or fuel altering equipment. CO is virtually eliminated, and flame envelope is minimized.

Equipment Description

The proposed burners will be manufactured complete with the following:

Burner Plenum	Common or Integral	Integral
	Material	Carbon Steel
	Plate Thickness	10 Gage
Inlet Air Control	Damper or Register	Opposed Blade Damper
	Mode of Operation	Manual
Burner Tile	Composition	60% Al_2O_3
	Max. Service Temperature	3000°F
Insulation	Type	Mineral Wool
	Thickness	1"
Noise Muffler	Yes/No	Yes
Pilot	Ignition Method	Fixed Ignition Rod
	Flame Detection	No
	Connection	½" FNPT
	Fuel	Natural Gas
	Fuel Pressure (psig)	7-10
	Capacity (MMBtu/hr)	0.10
Ignition Port	Size/Quantity	2"/1
Sight Port	Size/Quantity	2"/1
Scanner Connection	Size/Type	1" Swivel
	Quantity	1
Gas Manifold	Material	CS
	Connection	2" MNPT
Gas Tips/Risers	Tip Material	CK-20
	Riser Material	304SS
	Connection To Manifold	3000# SW Unions
Waste Gas Manifold	Material	304SS
	Connection	½" MNPT
	Tip Material	CK-20
Surface Requirements	Preparation	SSPC-SP-2
	Primer	1 Coat Blue Oxide

Guaranteed Emission Values

The burner's expected NO_x emissions, based on each fuel's lower heating value, are as follows:

Expected #/MMBtu NO_x	Guaranteed #/MMBtu NO_x
0.026	0.030 (Note #1)

Carbon Monoxide (CO) ..... 0.~~0000~~ .04 lb/MMBtu
(Basis: 1500°F min. Radiant Fire Box Temperature, 2% to 4% volume (dry) Oxygen in Combustion Products, Reported as Methane, HHV.)

Note #1: NO_x guarantee does not include the case when Waste Gas is run.

Guaranteed Noise Level

At 3 feet from burner .....85 dB(A)

DeEthanizer Regen Htr. - ~~H-1731~~
DI- H-741

1. INTRODUCTION

1.1 Executive Summary

On behalf of the entire TULSA HEATERS INC. (THI) organization, it is my pleasure to present THI's proposal for One Direct Fired Heater for MarkWest Energy in response to TRCo RfQ J-287.

In accordance with the aforementioned inquiry, THI's proposal provides the following:

Process Summary:
- the inquiry specified heater type (Standard HOrizontal (SHO) Heater)
- the inquiry specified design duty (10.15 MMBTU/ hr)
- the inquiry specified thermal efficiency (85.8% Calculated)

Combustion Summary:
- the inquiry specified burner type (CUBL, FreeJet or COOLstar)
- the inquiry specified NOx Emissions (not to exceed 30 ppm)

Mechanical Summary:
- the inquiry specified coil materials (tubes of SA106 Gr.B)
- the inquiry specified internal coating, as noted below (None)
- the inquiry specified casing and structure (Basic Velocity = 90 mph)
- the inquiry specified external coating, as noted below (3.0- 4.0 dftmil Gray CZ11 Primer on SP-6 Surface)
- the inquiry specified refractory systems (ie, castables & c.f. blanket systems)
- one THI specified lined stack (reference data sheets for details)

Additional design and scope of supply details are provided in Sections 2, 3, 4, 5, 6, 7, and 8.

2. BASIS of PROPOSAL

2.1 Applicable Documents

2.1.1 THI's Design Standards

Unless superseded by the Customer's inquiry specifications, THI's proposal is based on the application of ISO 13705 / API Std560 and the following industry standards to the extent that they apply to general service fired heaters and waste heat recovery modules.

• API	Std 530, Std 560, RP 531M, RP 535, RP536 RP 550 and RP 556
• AISC	Manual of Steel Construction
• ANSI/ASCE	7-02
• ASME	B16.5, B16.9, B16.11, B31.1, B31.3, B36.10, Boiler & Pressure Vessel Code, Sections I through IX
• ASTM	A193, A194, A-297, A-351, A384, A385, C64, C155, C332, E186,
• CSA	B51
• ICBO	Uniform Building Code
• ISO	13704 & 13705
• CNBC	Canadian National Building Code

2.1.2 THI's Manufacturing Standards

Unless superseded by the Customer's inquiry specifications, THI's proposal is based on the application of ISO 13705 / API Std560 and the following industry standards to the extent that they apply to general service fired heaters and waste heat recovery modules.

• ASTM	Tubes*: A53, A106, A161, A200, A213, A271, A312, A333, A335, A376, A608, B163, B167, B407 and B423 * All heater tubes will be seamless, unless such tubulars are not commercially available (and same will be ERW w/ 100% RT). Fittings: A216, A217, A234, A351, A403, A420, B366 Forgings A105, A182, A350, B564 Supports A216, A217, A240, A283, A297, A447, A560, E165, E433, E446 Refracto. C27, C155, C401, C612 L&P's: A36, A123, A143, A153, A384, A385, A572, A588, A786 Casing: A36, A514, A529, A572, A852 Stiffners. A36, A242, A529, A572, A588, A852, A913 Structure A36, A242, A529, A572, A588, A913, A992
• AWS	D1.1 Structural Welding Code
• CSA	W47.1, W59
• SSPC	SP-3, SP-5, SP-6, SP-10

2.1.3 Inquiry Documents

This proposal is rigorously based on TRCo RfQ J-287 and all of its attachments (note the enclosed document listing: LIST 2.1). Furthermore, except as superseded by the inquiry specifications, THI's proposal is in accordance with the following industrial standards.

3. SCOPE of SUPPLY

3.1 Activities

This proposal provides for the following major activities:

- *Process Design (combustion + thermal + hydraulic + draft),*
- *Mechanical Design (coil wall + terminal loads + refractory),*
- *Structural Design (with RISA),*
- *Project Management,*
- *General Arrangement Drawings and Documentation,*
- *Fabrication (Detail) Drawings and Documentation,*
- *Component & Materials Procurement,*
- *Shop Fabrication and Module Assembly,*
- *Expediting,*
- *Quality Assurance/Quality Control,*
- *Document Control,*
- *Shipping Preparation,*
- *Shipping to Site/Port (optional),*
- *Site Supervision (optional), and*
- *Commissioning and Start-up (optional).*

3.2 Materials & Services

Please refer to TABLE 3.2 for definition of THI 's proposed materials and services scope of supply (ie, our understanding of the inquiry's requirements). Furthermore, realizing that the proposed custom engineered heater has not been fully integrated into the Customer 's process unit design, THI offers to provide future material and engineering changes as set forth in section 8.3. Please refer to subsection 8.3 for details.

3.3 Documentation

The above activities will typically yield the following relevant documentation:

- *Data Sheets; fired heaters, burners, fans, etc.,*
- *Calculations; draft, settings, coil wall, stack frequency, structural, etc.*
- *Performance Curves; burners, fans, etc.,*
- *General Arrangement Drawings; casing, structure, refractory, coil, components,*
- *Foundation Loading Diagram; wind, seismic, snow and load combinations,*
- *Fabrication Drawings; all fabricated components except coil,*
- *Procedures; performance test, NDE, welding, PWHT, and erection procedures,*
- *Final Data Books; collection of all historically important data, and*
- *Test and NDE Records.*

Please refer to TABLE 3.3 for a complete definition of THI 's proposed documentation scope of supply (ie, our understanding of your vendor data requirements).

6. TECHNICAL

6.1 Overview of Regen Gas Heater - H-1741 ; THI's P12-8006

6.1.1 Technical Discussion

The proposed heater is a Standard HOrizontal (SHO) box type with a helical coil that satisfies the inquiry document requirements. In accordance with these documents, THI's base offer for this heater provides the following performance and features:

Process Design

- Total process duty of 10.15 MMBTU/hr during Design operations,
- Single Fired Radiant Coil features 2D spacing and provides 700 ft2 surface area,
- Process pressure drop of 10 psig for Design operations,
- Calculated thermal efficiency of 85.8% during Design operations,

Combustion Design

- Burner Management System (BMS) consisting of Gas and Pilot Trains, and a Local Control Panel designed for Class I, Division 2 areas.
- FD Gas Fired Burner (w/ Pilot and FD Fan) that provides 3.17:1 firing turndown,
- FD Fan Assembly, with El.Motor and Control Damper (shop installed at FabShop),
- Fuel Gas and Pilot Gas Trains per NFPA 87 (shop installed at FabShop),
- Local Panel in enclosure suitable for outdoor service (ship loose for Field installation),

Mechanical Design

- Overall mechanical design is in substantial compliance with API Std 560 / ISO 13705,
- Process Coils' thermal design is per API Standard 530 / ISO 13704,
- Process Coils's mechanical design is per ASME Section VIII,
- Process Coil Supports are API Standard 560 / ISO 13705 compliant,
- Radiant casing of stiffened 10 ga CS plate; per data sheets & TABLE 3.2,
- Radiant structure of typical CS shapes; per data sheets & TABLE 3.2,
- Convection casing of stiffened 10 ga CS plate; per data sheets & TABLE 3.2,
- Convection tubesheets of 3/8 in CS plate; per data sheets & TABLE 3.2,
- Convection structure of typical CS shapes; per data sheets & TABLE 3.2,
- Exhaust Duct (stub-stack) of 10 ga CS plate; per data sheets & TABLE 3.2,
- External coating(s) are 3.0- 4.0 ditmil CZ11 Primer; per data sheets & TABLE 3.2,
- Internal coating is NOT included; per data sheets & TABLE 3.2,

6.1.2 Fired Heater Data Sheets; Single Cell Standard HOrizontal (SHO) type

6.1.3 Sketch; Single Cell Standard HOrizontal (SHO) Elevation

Owner:	MarkWest Energy	Owner Ref.:	H-1741	
Purchaser:	THOMAS RUSSELL CO.	Purchaser Ref.:	J-287	
Manufacturer:	TULSA HEATERS INC.	THI Ref.:	P12-8006	/ SHO1250.LP 16x 10.5
Service:	Regen Gas	Unit No:	Utility	
Number:	One	Location:	PlantSite Unknown	
Process Duty:	10.15 MMBTU/ hr	Heater Type:	Standard HOrizontal (SHO) Heater w/ High Efficiency Convection Section and Forced Draft Combustion System	
Total Duty:	10.15 MMBTU/ hr			

PROCESS DESIGN CONDITIONS

		RADIANT	CONVECTION	CONVECTION	TOTAL
Heater Section	---	RADIANT	CONVECTION	CONVECTION	TOTAL
Operating Case	---	Design Case	Design Case	Design Case	Design Case
Service	---	Regen Gas	Regen Gas	Service "b"	
Heat Absorption	MMBTU/ hr	7.14	3.01 / 10.15	0.00	10.15
Process Fluid	---	HC Vapour	HC Vapour		
Process Mass Flow Rate, Total	Lb/ hr	32,400	32,400		
Process Bulk Velocity (allow. / calc.)	ft/ s	--- / 46	--- / 11	/	
Process Mass Velocity (min./ calc.)	Lb/ s ft2	--- / 88	--- / 61	/	
Coking Allowance (dP calcs)	in				
Pressure Drop, Clean (allow. / calc.)	psi	< ------ 10	/ 10 ------ >	/	
Pressure Drop, Fouled (allow. / calc.)	psi	< ------	/ ------ >	/	
Average Heat Flux (allowable)	BTU/ hr ft2	12,000			
Average Heat Flux (calculated)	BTU/ hr ft2	10,200			
Maximum Heat Flux (allowable)	BTU/ hr ft2				
Maximum Heat Flux (calculated)	BTU/ hr ft2	18,360	16,000		
Fouling Factor, Internal	hr ft2 °F/ BTU	0.001	0.001		
Corrosion or Erosion Characteristics	---				
Max. Film Temperature (allow. / calc.)	°F	/ 625	/ 391	/	
Inlet Conditions:					
Temperature	°F	256	132		
Pressure	psig	674	675		
Mass Flow Rate, Liquid	Lb/ hr		0		
Mass Flow Rate, Vapor	Lb/ hr		32,400		
Weight Percent, Liquid / Vapor	wt%		0% / 100%	/	
Density, Liquid / Vapor	Lb/ ft3		0.00 / 4.69	/	
Molecular Weight, Liquid / Vapor	Lb/ Lbmole		/ 23.8	/	
Viscosity, Liquid / Vapor	cp		0.000 / 0.013	/	
Specific Heat, Liquid / Vapor	BTU/ Lb °F		0.000 / 0.695	/	
Thermal Conductivity, Liquid/Vapor	BTU/hr ft °F		0.000 / 0.018	/	
Surface Tension, Liquid	dyne/ cm		/	/	
Outlet Conditions:					
Temperature	°F	550✓	256		
Pressure	psig	665	674		
Mass Flow Rate, Liquid	Lb/ hr	0			
Mass Flow Rate, Vapor	Lb/ hr	32,400			
Weight Percent, Liquid / Vapor	wt%	0% / 100%		/	
Density, Liquid / Vapor	Lb/ ft3	0.00 / 1.91		/	
Molecular Weight, Liquid / Vapor	Lb/ Lbmole	/ 23.8		/	
Viscosity, Liquid / Vapor	cp	0.000 / 0.018		/	
Specific Heat, Liquid / Vapor	BTU/ Lb °F	0.000 / 0.702		/	
Thermal Conductivity, Liquid/Vapor	BTU/hr ft °F	0.000 / 0.035		/	
Surface Tension, Liquid	dyne/ cm	/		/	

Rev.00	1-Feb-12	Issued w/ Initial Proposal	JEH	COX	VPS
revision	date	description	by	chk'd	appv'd

MarkWest Energy

Thomas Russell Co. THI TULSA HEATERS INC.

SHO = Superior Quality, Flexibility, Dependability & Modularity

FIRED HEATER DATA SHEET

AMERICAN ENGINEERING SYSTEM of UNITS

P12-8006 -HTRds- Rev.00

This document contains confidential information, which is proprietary to THI. This document shall not be used, reproduced or disclosed without the prior written consent of THI.

12

Owner Ref.: ~~H-1741~~ H-741 THI Ref.: P12-8006

COMBUSTION DESIGN CONDITIONS

Overall Performance:		RADIANT	CONVECTION	CONVECTION	TOTAL
Operating Case	---	Design Case	Design Case	Design Case	Design Case
Service	---	Regen Gas	Regen Gas	Service "b"	
Excess Air	mol%				15.0%
Calculated Heat Release (LHV)	MMBTU/hr				17.83
Guaranteed Efficiency	HR%				83.0%
Calculated Efficiency	HR%				85.8%
Radiation Loss	HR%				1.50%
Flow Rate, Combustion Gas/ Imported	Lb/hr	11,588	/0		11,588
Flue Gas Temperature Leaving Section	°F	1,410	830		
Flue Gas Mass Velocity	Lb/sec ft2		0.278		

Fuel(s) Data:		Design Mol.Wt.			Design Fuel Oil
LHV	BTU/scf	884			---
LHV	BTU/Lb	19,295			
P @ Burner	psig	30			
T @ Burner	°F	100			
MW	Lb/Lbmole	17.35			
μ @ ??? °F	cp	---			
μ @ ??? °F	cp	---			
Atomizing Media		---			
Atom. Media P & T		---			
Components:					
N	wt%	---			
S	wt%	---			
Ash	wt%	---			
Ni	ppm	---			
Va	ppm	---			
Na	ppm	---			
Fe	ppm	---			
H2	mol%	0.00			---
O2	mol%	0.00			---
N2 + Ar	mol%	0.20			---
CO	mol%	0.00			---
CO2	mol%	3.80			---
CH4	mol%	94.25			---
C2H6	mol%	1.40			---
C2H4	mol%	0.00			---
C3H8	mol%	0.14			---
C3H6	mol%	0.00			---
C4H10	mol%	0.04			---
C4H8	mol%	0.00			---
C5H12	mol%	0.00			---
C5H10	mol%	0.00			---
C6+	mol%	0.00			---
H2S	mol%	0.05			---
SO2	mol%	0.00			---
NH3	mol%	0.00			---
H2O	mol%	0.07			---
spare	mol%	0.00			---

Nominal Clearances:		Vertical	Horizontal
... for Gas Firing:		Calculated	Calculated
... from burner CL ...		per THI Design	per THI Design
to Tube CL	ft	3.44	3.44
to Refractory	ft	n/a	19.10

Burner Design:		
OEM	---	Callidus (ZEECO) or John Zink
Type	---	ULTRA Low NOx 4th Gen Low NOx
Quantities	---	3 Model 1 and 0 Model 2 Burners
Model No.1	---	CUBL, Free Jet or COOLstar Cylindrical
Model No.2	---	None
Windbox	---	yes ... w/ parallel blade registers
Location	---	EndWall Center ... Horizontally Fired
Pilot Design:		
Type	---	Continuous Self-inspirating
Model	---	by O.E.M.
Ignition	---	Electric requires elec.ign.system
Heat Release	--	> 90,000 BTU/hr on ... Design RFG

Burner Performance:		Model 1	Model 2
Minimum Heat Release	MMBTU/hr	1.50	
Design Heat Release	MMBTU/hr	3.94	
Maximum Heat Release	MMBTU/hr	4.75	
Burner Turndown	Max:Min	3.17	
Volumetric Ht. Release	BTU/hr ft3	10,230	
Draft @ Arch	inH2O	0.10	
Draft @ Burner	inH2O	5.70	
Combustion Air T @ Burner	°F	60	
Flue Gas T @ Burner	°F	1,410	

Guaranteed Emissions:		<-- Combined -->	
Basis of Guarantee	---	3.0% O2, dry (LHV)	
NOx Emissions	LbMMBTU	0.040	30 ppm
SOx Emissions	LbMMBTU	no quote	no quote
CO Emissions	LbMMBTU	0.041	50 ppm
UHC Emissions	LbMMBTU	0.007	15 ppm
VOC Emissions	LbMMBTU	0.015	15 ppm
SPM10 Emissions	LbMMBTU	0.013	15 ppm
Noise Emissions	dBA @ 3ft	85.0	------>

Special Burner Features &/ or Services:	
Reed Wall	None -- not applicable
Pilot Detection	None
Main Detection	None
Burner Test	Yes; per Attachment A
CFD/ CF Models	None / None

Net Clearances:	
Est. Flame Size	approx. 12 ft. x 2 ftDia
Hor Clearance	2' 3" NET Tube Clearance
Vert. Clearance	2' 3" NET Tube Clearance
Axial Clearance	4 ft NET Refractory Clearance (ie. Arch hot face)

Owner Ref.: ~~H-1741~~ 3 D1-H-741 THI Ref.: P12-8006

Fnt & Rev

PRESSURE PARTS DESIGN

Coil Design:		RADIANT	SHIELD	CONVECTION	CONVECTION	
Service	---	Regen Gas	Regen Gas	Regen Gas	Service "b"	
Design Basis for Tube Temperature	---	ISO 13704 (530)	ISO 13704 (530)	ISO 13704 (530)		
Design Basis for Tube Wall Thickness	---	ASME Section VIII	ASME Section VIII	ASME Section VIII		
Design Life	hr	100,000	100,000	100,000		
Design Pressure (elastic / rupture)	psig	800 /	800 /	800 /		
Design Fluid Temperature	°F	575	281	281		
Design Temperature Allowance	°F	25	25	25		
Design Corrosion Allowance (tubes/fittin	in	0.063 / 0.063	0.063 / 0.063	0.063 / 0.063	/	
Maximum Tube Temperature (clean)	°F	639				
Maximum Tube Temperature (fouled)	°F	660	409	409		
Design Tube Temperature	°F	710	461	461		
Inside Film Coefficient	BTU/ hr ft2 °F	279	132	132		
Weld Inspection	RT or Other	100 of 100%	100 of 100%	100 of 100%		
Weld Heat Treatment	s.rel., t.stab. or none	None	None	None		
Hydrostatic Test Pressure	psig	per API	per API	per API		
Coil Arrangement:		Horizontal	Horizontal	Horizontal		
Coil Type	---	Helical	Serpentine	Serpentine		
Tube Material (pipe or tube spec)	ASTM	SA106 Gr.B	SA106 Gr.B	SA106 Gr.B		
Supplementary Mfg Requirements	ASTM	None	None	None		
Tube Outside Diameter	in	3.500 .384	4.500 .661	4.500 .661		
Tube Wall Thickness (aw / mw)	in	0.216 / 0.189	0.237 / 0.207	0.237 / 0.207	/	
Number of Cells (radiant or convection)	---	1	1	1		
Number of Flow Passes (total / cell)	---	2 / 2	2 / 2	2 / 2	/	
Number of Tubes per Row (total / cell)	---		4 / 4	4 / 4	/	
Overall Tube (1 turn in radiant) Length	ft	28.26	11.50	11.50		
Effective Tube Length / Helix Diameter	ft	28.26 / 9.00	9.92	9.92		
Number of Turns or Tubes (total / pass)	---	27.0 / 13.5	4 / 4	0 / 0	/	
Total Exposed Surface	ft2	700	47	0		
Number of Ext.Surf. Tubes (total / cell)	---	0 293 / 0	0 / 0	12 / 12	/	
Total Exposed Surface	ft2	0	0	1,512		
Tube Spacing (horizontal / tube centers)	in	--- / 8.00	8.00 / 8.00	8.00 / 8.00	/	
Tube Spacing (horizontal to refractory)	in	4.50	4.00	4.00		
Coil Fittings:		Regen Gas	Regen Gas	Regen Gas		
Fitting Type	---	SR 180° U-Bends	SR 180° U-Bends	SR 180° U-Bends		
Fitting Material	ASTM	A234 WPB	A234 WPB	A234 WPB		
Supplementary Mfg Requirements	ASTM	None	None	None		
Fitting Outside Diameter	in	3.500	4.500	4.500		
Fitting Wall Thickness (aw / mw)	in	0.216 / 0.189	0.237 / 0.207	0.237 / 0.207	/	
Fitting Location	internal or external	Internal	External	External		
Tube Attachment	welded or rolled	Welded	Welded	Welded		
Coil Terminals:		Outlet		Inlet		
Terminal Type	beveled or flanged	Flanged		Flanged		
Flange Material	ASTM	A105		A105		
Supplementary Mfg Requirements	ASTM	None		None		
Flange Size and Rating	NPS/ ASME	3" NPS / 300 #		4" NPS / 300 #		
Flange Type	RFWN or RTJ	RFWN		RFWN		
Location	---	Burner Endwall		Terminal End		
Extended Surface:			CONVECTION	CONVECTION	CONVECTION	
Service	---		Regen Gas	Regen Gas	Future	
Fin or Stud Row Number	starting @ bottom		No.1 / No.2	No.3 /	None /	
Ext. Surface Type	seg.fins, solid fins, studs		HF Seg. Fins	HF Seg. Fins		
Fin/Stud Material	---		C.S. / C.S.	C.S. /	/	
Fin/Stud Dimensions	H x T, in		1.00 x 0.080"	1.00 x 0.080"		
Fin/Stud Density	fin/ in or stud/ plane		2.00 fpi / 3.00 fpi	4.00 fpi /	/	
Maximum Fin/Stud Temperature	°F		800 / 740	650 /	/	

Owner Ref.: ~~H-1741~~ DI-H-741 THI Ref.: P12-8006

Fnl & Rev

PRESSURE PARTS DESIGN (continued)

		RADIANT	SHIELD	CONVECTION	CONVECTION
Crossovers:					
Type, location / connections	---	External	/ Flanged	None	
Tube / Fittings Material	ASTM	SA106 Gr.B	/ A234 WPB		
Tube & Fitting OD / Thickness (aw)	in	3.500	/ 0.216		
Inlet Manifold(s):	type			Simple LOG	
Location	---			Top of Convection	
Pipe Material	ASTM			SA106 Gr.B	
Fittings Material	ASTM			A234 WPB	
Design Basis for Manifold Thickness	---			ASME B31.3	
Design Conditions (temp./press.)	°F/ psig			281 / 800.0	
Outside Diameters, each Branch	in			8" NPS	
Wall Thickness(es); aw ~~or mw~~	in			sch40 (0.322"aw)	
Tube Connection Type	extrusion, olet, etc.			Weld-O-Let	
End Types (terminal/ dead)	beveled or flanged			Flanged / W.Cap	
Terminal Flange Material	ASTM			A105	
Terminal Flange Size and Rating	NPS/ ASME			8"NPS / 300#	
Terminal Flange Style	RFWN or RTJ			RFWN	
Outlet Manifold(s):	type	Simple LOG			
Location	---	Burner Endwall			
Pipe Material	ASTM	SA106 Gr.B			
Fittings Material	ASTM	A234 WPB			
Design Basis for Manifold Thickness	---	ASME B31.3			
Design Conditions (temp./press.)	°F/ psig	575 / 800.0			
Outside Diameters, each Branch	in	8" NPS			
Wall Thickness(es); aw ~~or mw~~	in	sch40 (0.322"aw)			
Tube Connection Type	extrusion, olet, etc.	Weld-O-Let			
End Types (terminal/ dead)	beveled or flanged	Flanged / W.Cap			
Terminal Flange Material	ASTM	A105			
Terminal Flange Size and Rating	NPS/ ASME	8"NPS/ 300#			
Terminal Flange Style	RFWN or RTJ	RFWN			

COIL & MANIFOLD SUPPORTS DESIGN

		RADIANT	SHIELD	CONVECTION	CONVECTION
Tube Supports:					
Service	---	Regen Gas	Regen Gas	Regen Gas	Service "b"
Location	Top, Bottom, Ends	Bottom	Ends	Ends	
Support Type	casting, tubesht, spring, etc.	HD Angles	Welded Tbsheets	Welded Tbsheets	
Support Thicknesses	in	2 x 2 x 0.250	0.375	0.375	
Support Materials	ASTM	A240 T304H	A36 CS	A36 CS	
Support Temperatures (calc./ design)	°F / °F	1,010 / 1,210	545 / 700	545 / 700	/
TbSht Ferrules Thickness / Materials	in/ ASTM	--- / ---	14 ga. / 304 SS	14 ga. / 304 SS	/
Refractory & Anchor Materials & Types	---	none	per refrac. section	per refrac. section	
Intermediate Guides & Supports:		One	None	None	
Location	---	Top			
Guide/ Support Type	casting, spring, etc.	HD Angles			
Material	ASTM	A240 T304H			
Spacing, average	ft				
Tube Guides:	Top, Bottom, Ends	None	None	None	
Material	ASTM				
Manifold Supports:		Outlet Manifold		Inlet Manifold	
Material	ASTM	A36		A36	
Materials Design & Supply	---	by THI		by THI	
Location	Top, Bottom, Ends	Burner Endwall		Top of Convection	
Support Type	roller, shoe, spring, etc.	Simple Shelf		Simple Shelf	
Number of Supports	---	One (1)		One (1)	

CASING / REFRACTORY SYSTEMS DESIGN

			BURNER ENDWALL	BURNER FIREWALL	SHIELDED SIDEWALLS	ARCH ENDWALL
1						
2						
3						
4	**Radiant Section Design:**					
5	Total Refractory Thickness	in	6.0	6.0	3.0	6.0
6	Hot Face Temperature (design)	°F	2,000°	2,600°	2,000°	2,000°
7	Hot Face Temperaure (calculated)	°F	1,410	1,610	1,010	1,410
8	Hot Face Layer	in/---	1/ 8# CF Blanket	1/ 8# Cerachem	1/ 8# CF Blanket	1/ 8# CF Blanket
9	Back-Up Layer No.1	in/---	1/ 6# CF Blanket	2/ 6# CF Blanket	2/ 6# CF Blanket	1/ 6# CF Blanket
10	Back-Up Layer No.2	in/---	3/ 6# CF Blanket	3/ 6# CF Blanket	None	3/ 6# CF Blanket
11	Foil Vapor Barrier	in/---	None	None	None	None
12	Castable Reinforcement (SS Needles)	wt%	None	None	None	None
13	**Anchors / Tie Backs:**	---	Pins & Clips	Pins & Clips	Pins & Clips	Pins & Clips
14	Material	---	310 S.S.	310 S.S.	304 S.S.	310 S.S.
15	Attachment	---	Welded	Welded	Welded	Welded
16	**Casing:**					
17	Material	in/ ASTM	10 ga./ A36	10 ga./ A36	10 ga./ A36	10 ga./ A36
18	Internal Coating	---	None	None	None	None
19	External Temperature, Typical	°F	180	195	180	180
20	**Comments / Clarifications**	---	w/ clb wraps	24 in Perimeter	w/o clb wraps	w/ clb wraps
21			SHOP Installed	SHOP Installed	SHOP Installed	SHOP Installed
22						
23			SIDEWALLS		ENDWALLS	
24	**Convection Section Design:**		SHIELD	FINNED	TUBESHEETS	HEADER BOXES
25	Total Refractory Thickness	in	3.0	3.0	3.0	2.0
26	Hot Face Temperature (design)	°F	2,000°	2,000°	2,200°	2,000°
27	Hot Face Temperaure (calculated)	°F	970	970	970	458
28	Hot Face Layer	in/---	1/ 8# CF Blanket	1/ 8# CF Blanket	3/ Kaolite 2200	1/ 8# CF Blanket
29	Back-Up Layer No.1	in/---	2/ 6# CF Blanket	2/ 6# CF Blanket	None	1/ 8# CF Blanket
30	Back-Up Layer No.2	in/---	None	None		
31	Foil Vapor Barrier	in/---	None	None	None	None
32	Castable Reinforcement (SS Needles)	wt%	None	None	None	None
33	**Anchors / Tie Backs:**	---	Pins & Clips	Pins & Clips	Bullhorns	Pins & Clips
34	Material	---	310 S.S.	304 S.S.	304 S.S.	304 S.S.
35	Attachment	---	Welded	Welded	Welded	Welded
36	**Casing:**					
37	Material	in/ ASTM	10 ga./ A36	10 ga./ A36		10 ga./ A36
38	Internal Coating	---	None	None	None	None
39	External Temperature, Typical	°F	180	180		180
40	**Comments / Clarifications**	---	Cleaning / Sootblowing lanes: none of 0' - 0" height.			Bolted Assembly
41		---	SHOP Installed	SHOP Installed	SHOP Installed	SHOP Installed
42						
43			FLUE GAS DUCTS			
44	**Stack & Uptakes Design:**		BREECHING	15° TRANSITION	DISCH. DUCT	
45	Quantity		One	One	One	
46	Type / Location	---	Full L / Conv	Full L / Conv	Self.Spt / Grade	
47	Length / Metal Outside Diameter (top)	ft/ft	10.50 / n/a	10.50 / n/a	? / 2.00	
48	Discharge Elev., minimum/ calculated	ft/ft	n/a / n/a	n/a / n/a	20 / 23	
49	Total Refractory Thickness	in	1.0	0.0	0.0	
50	Hot Face Temperature (design)	°F	2,000°			
51	Hot Face Temperaure (calculated)	°F	0	0	0	
52	Hot Face Layer	in/---	1/ 8# CF Blanket	None	None	
53	Back-Up Layer No.1	in/---	None			
54	Castable Reinforcement (SS Needles)		None			
55	**Anchors / Tie Backs:**	---	Pins & Clips			
56	Material	---	304 S.S.			
57	Attachment	---	Welded			
58	**Casing:**					
59	Minimum Thickness/ Material	in/ ASTM	10 ga./ A36	0.1875 / A36	0.1875 / A36	
60	Corrosion Allowance	in	None	None	0.0625	
61	Internal Coating	---	None	None	None	
62	External Temperature, Typical	°F	180	0	0	
63	**Comments / Clarifications**	---	SHOP Installed			
64						

Owner Ref.: ~~H-1741~~ DI-H-741 THI Ref.: P12-8005

MECHANICAL / STRUCTURAL DESIGN BASIS

Refractory & Coatings Design:

Refractory Design	180°F Casing / 196°F Floor Temperatures w/ Ambient Conditions of 0 MPH & 80°F
Refractory Dryout	SHOP dryout = None // FIELD dryout (per ES -1-9) within 3 months of shipment is recommended.
Coating, Internal	None
Coating, External	3.0- 4.0 dftmil Gray Carbozinc 11 Primer on SP-6 Surface (Continuous Service up to 750 °F / 400 °C)
	Complementary Intermediate &/or Finish Coats are OPTIONAL (ie, provided only upon request)

Applicable Standards:

API	~~Std 560 (ISO 13705): Fired Heaters for ...~~	AISC	Specification for Design, ... Steel for Buildings
API	Std 530 (ISO 13704): Calc. of Heater Tube	AWS	D 1.1: Structural Welding Code
ASME	B31.3, Chemical Plant and ... Piping	ASTM	tube/ smls pipe/ fitting spec's noted herein
ASME	Sections I, II, VIII: B&PV Code	ASTM	refractories per C27, C155, C401 & C612
ASME	Section V: Non Destructive Examination	NFPA	NFPA 70: National Electrical Code

Wind Design:

Spec. or Standard	ASCE 7 -10
Velocity/ Imp. Factor	90 mph / 1.15
Site Exposure	"C"

Seismic Design:

Spec. or Standard	ASCE 7 -10
Zone/ Imp. Factor	Zone 2 / 1.25
spare	

Physical Design:

Plot Limitations	None
Tube Limitations	None
Firebox Pressure	Positive; approximately +2.5 inH2O
Ambient Temp's	0 °F Min/ 60 °F Dsn/ 100 °F Max

Site Design Basis:

Site Elevation	750	ft AMSL /	229	m AMSL
Stack Design Temp.	90	°F /	32	°C
FG Discharge Elev., min.	20	ft AG /	6.1	m AG
Area Classification	base: UNCLASSIFIED			

MAJOR SUBSYSTEMS & ACCESSORIES

Major Services & Subsystems

Process Design	INCLUDED in base pricing
Mechanical Design	INCLUDED in base pricing
Structural Design	INCLUDED in base pricing
Radiant Section	INCLUDED in base pricing
Convection Section	INCLUDED in base pricing
Burner Management	INCLUDED in base pricing
Burner Piping	INCLUDED in base pricing
Forced Draft System	INCLUDED in base pricing

Major Accessories:

Casing/ Tube Seals	8	TubeSox: Radiant & Conv.
Observation Doors	3	3 in Dia. w/ H.T. glass
Observation Doors	None	
Access Doors	1	Std 24" x 24"
Access Doors	None	
Tube Pulling Doors	None	
Pressure Relief Doors	None	
Expansion Joints	None	

Casing Penetrations

Fbox Purge/ Snuff	2	2"NPS 150# RFWN's
CA Temperature	None	
CA Pressure	None	
FG Temperature	3	1.5"NPS 3000# Coupling
FG Pressure	3	1.5"NPS 3000# Coupling
FG Composition	1	1.5"NPS 3000# Coupling
FG Comp. (AE - O2)	2	3"NPS 150# RFWN's
FG Comp. (AE - CO)	1	3"NPS 150# RFWN's
FG Comp. (AE - EPA)	2	4"NPS 150# RFWN's
FG Comp. (AE - CEM	None	

Pressure Part Penetrations

Coil TSTC's, Radiant	None
Coil TSTC's, Convection	0
Process TI conn's	None
Process PI conn's	None
Velocity Steam conn's	None
S/A Decoking conn's	None
Vent / Drain conn's	None
spare	
spare	
spare	

Dampers:	FD Fan ref. page 7	Uptake Ducts quantity =	Stack quantity =
Function			Note: O2 Control is provided by
Design			Forced Draft Fan's Inlet Damper
Materials			
Bearings			
Operator			
Positioner			
Instruments			

Sootblowers:	Qty.	Type	Location	FG T	Material	Steam T & P	O.E.M. / Ref.
Lane 1:	None						
Lane 2 :	None						

MAJOR SUBSYSTEMS & ACCESSORIES (continued,

Fan Assemblies:		Forced Draft Fan Assembly	Induced Draft Fan Assembly	
FD / ID Fans Design Basis	mass.flow.%	115% of Heater Design Mass Flow		
Quantity of Assemblies	--/%	One (1) Forced Draft Fan Assembly	None Induced Draft Fan Assembly	
Location(s)	---	@ Grade, adjacent to Burner Endwall		
Area Classification	NEC	basis: UNCLASSIFIED		
Process Design:		Heater Design	FD Fan Design or "Test Block"	
Mass Flow Rate/ % Hlr Design	Lb/ hr	11,000 / 100%	12,700 / 115%	
Volumetric Flow/ % Hlr Design	aft3/ min	2,500 / 100%	3,100 / 124%	
Density, @ Suction & noted T & P	Lb/ ft3	0.0744	0.0691	
Design Allowances, Temp./ SP	°F/ %	--- / ---	40 °F / 154%	
Temperature @ Suction, Design	°F	60	100	
Static Pressure @ Suction, Design	inH2O	-0.4	-0.5	
Site Elevation/ Atm. Pressure	ftAMSL/ psia	750 / 14.33	750 / 14.33	
Static Pressure Rise (min./ guar.)	inH2O	5.1 / t.b.a.	7.6 / t.b.a.	
Static Efficiency (min./ guar.)	%	--- / t.b.a.	--- / t.b.a.	
Fan Speed (allowable/ actual)	RPM	1,780 / t.b.a.	1,780 / t.b.a.	
Sound Pressure (allowable/ guar.)	dBA	< 85 / t.b.a.	< 85 / t.b.a.	
Fan Mechanical Design:	fan OEM	t.b.d.		
OEM Reference	---			
OEM Model &/or Type-Size	---			
Arrangement	---	Arrangement 8		
Brake Power (calculated)	HP			
Temperature, Maximum Operating	°F			
Casing Description	---			
Casing Material(s)	---			
Blade Description	---			
Blade & Rotor Assembly Material(s)	---			
Shaft Description	---			
Shaft Seals Description	---			
Bearings Description	---			
Bearing Instrumentation Description	---			
Coupling Description	---			
Silencer Description	---			
External Insulation Provisions	---	None		
External Coatings & Surface Prep.	---	OEM's Std Multiple Coat System on SP-6 Surface		
Purchase Specifications	---			
Fan Control Design:	OEM	t.b.d.		
VFD Description	---			
VFD Rating	---			
Damper Description	---			
Actuator Description	---			
Actuator Operation	---			
External Coatings & Prep.	---	OEM's Std Multiple Coat System on SP-6 Surface		
Motor Design:	mtr OEM	t.b.d.		
OEM Reference	---			
Motor Type / Frame Size	---			
Rated Power w/ SF @ Speed	NEMA			
Local Power	V/ Hz/ ph			
Rotor Description	---			
Shaft Seals Description	---			
Bearings Description	---			
Insulation Description	---			
spare	---			
External Coatings & Surface Prep.	---	OEM's Std Multiple Coat System on SP-6 Surface		
Purchase Specifications	---			

MAJOR SUBSYSTEMS & ACCESSORIES (concluded,

Combustion Air PreHeater (CAPH):

Preheater Type	None Specified nor Offered		
Location		Design Basis	
OEM; Model & Ref.:		Service:	

CAPH Process Design:	---	Regen Gas	Combustion Air		
Inlet Temperature / Pressure	°F / psig				
Inlet Temperature / Pressure	°F / inH2O				
Inlet Flow Rate, to CAPH	Lb/hr				
Outlet Temperature / Pressure	°F / psig				
Outlet Temperature / Pressure	°F / inH2O				
Heat Transfer	MMBTU/hr				

CAPH Mechanical Design:			CAPH Extended Surface:		
Basis for Tube Thickness	basis		Fin/Stud Material	---	
Design Pressure / Temperature	psig/ °F	/	Fin/Stud Dimensions	in	
Corrosion Allowance	in		Fin/Stud Density	fpi	
Weld Inspection	% of %		Total Exposed Surface	ft2	
Post Weld Heat Treatment	yes or no				
CAPH Coil Arrangement:	---		**CAPH Manifolds:**	---	
Pipe/Tube Material	ASTM		Inlet Manifold NPS & sch.	ASTM	
Coil NPS & schedule	NPS/ ASME		Outlet Manifold NPS & sch	ASTM	
Effective Length/ Spacing	ft/ in	/	Flange Rating	ASME	
No. Tubes / Tubes per Row	--- / ---	/	Flange Material	ASTM	

Expansion Provisions:	Qty	Locations	Materials	Dan Movements	Design T & P
Slip Joints	0				
Slip Joints	0				
Fabric Expansion Joints	0		CS & LowTemp Materials	+/- 0.50 inch	110 F & 8 inH2O
Fabric Expansion Joints	0				

CA Ducting Design:					
Total Refractory Thickness	in	None	Anchor Type	---	None
Hot Face Temperature (design	°F		Anchor Material	---	None
Hot Face Layer	in/ ---	None	Casing	in/ ASTM	0.1875 / A36
Back-Up Layer No.1	in/ ---	None	Internal Coating	ASTM	None

Proposed Ladders & Platforms

Proposal & Design Basis:

1) Construction: 100% Galvanized A36 CS per API Standard 560 / ISO 13705
2) Provisions for External Coating(s) / Painting: None, except as explicitly set forth in THI's proposal
3) Additional L&P's: can be provided per the basis set forth in Sections 6 & 9 of THI's proposal

Component	Qty (--)	Width (ft)	Length (ft)	Arc (°)	O.D. (ft)	Weight (Lbm)	Price (US$)
Radiant Platforms							
Burner Platform	0	3.00	6.00	0	0.00	0	0
Ladder to Grade	0	3.00	6.00			0	0
Stair to Grade	0	3.00	6.00			0	0
Convection Platforms							
Conv. End Platforms	0	4.00	4.53			0	0
Conv. Side Platforms	0	3.00	21.00			0	0
Ladder to Grade	0	3.00	4.00			0	0
EPA Platform	0	3.00		270	9.00	0	0
Ladder to Grade	0	3.00	6.00			0	0
Intermediate Pltfm	0	3.00		90	9.00	0	0
Totals for Proposed Platforms						0	0

Owner:	MarkWest Liberty Midstr.& Res., LLC	Owner Ref.:	~~H-5711~~ H-7711, 8711, 9711	Ftnt & Rev
Purchaser:	EXTERRAN Energy Solutions, L.P.	Purchaser Ref.:	PO 5463168 for US-107259	
Manufacturer:	**TULSA HEATERS INC.**	THI Ref.:	J13-802 (formerly P13-8387)	
Service:	Regen Gas	Unit No:	Sherwood V 200 MMscfD Cryogenic Gas Plant	
Number:	One	Location:	West Union, WV U.S.A.	
SHO Duty:	14.22 MMBTU/ hr	SHO Model:	SHO.2000	
CMS.Release:	16.54 MMBTU/ hr	CMS Model:	CMS.2500 ULN	
SHOS Flow:	- - - USgal/ min @ ft TDH	SHOS.Model:	n / a	

PROCESS DESIGN CONDITIONS

Heater Section	---	RADIANT	CONVECTION	CONVECTION	TOTAL
Operating Case	---	Design Case	Design Case	Design Case	Design Case
Service	---	Regen Gas	Regen Gas	Service "b"	
Heat Absorption	MMBTU/ hr	9.70	4.52	0.00	14.22
Process Fluid	---	HC Vapor	HC Vapor		
Process Mass Flow Rate, Total	Lb/ hr	47,800	47,800		
Process Bulk Velocity (allow. / calc.)	ft/ s	- - - / 52	- - - / 24	/	
Process Mass Velocity (min./ calc.)	Lb/ s ft2	- - - / 83	- - - / 83	/	
Coking Allowance (dP calcs)	in				
Pressure Drop, Clean (allow. / calc.)	psi	< ------- 10.0	/ 10.0 ------- >	/	
Pressure Drop, Fouled (allow. / calc.)	psi	< -------	/ ------- >	/	
Average Heat Flux (allowable)	BTU/ hr ft2	12,000			
Average Heat Flux (calculated)	BTU/ hr ft2	11,200			
Maximum Heat Flux (allowable)	BTU/ hr ft2				
Maximum Heat Flux (calculated)	BTU/ hr ft2	18,480	18,400		
Fouling Factor, Internal	hr ft2 °F/ BTU	0.001	0.001		
Max. Film Temperature (allow. / calc.)	°F	None / 650	None / 370	/	
Inlet Conditions:					
Temperature	°F	265	120		
Pressure	psig	827	830		
Mass Flow Rate, Liquid	Lb/ hr		0		
Mass Flow Rate, Vapor	Lb/ hr		47,800		
Weight Percent, Liquid / Vapor	wt%		0% / 100%	/	
Density, Liquid / Vapor	Lb/ ft3		0.00 / 3.48	/	
Molecular Weight, Liquid / Vapor	Lb/ Lbmole		/ 21.4	/	
Viscosity, Liquid / Vapor	cp		0.000 / 0.014	/	
Specific Heat, Liquid / Vapor	BTU/ Lb °F		0.000 / 0.616	/	
Thermal Conductivity, Liquid/Vapor	BTU/hr ft °F		0.000 / 0.022	/	
Surface Tension, Liquid	dyne/ cm		/	/	
Outlet Conditions:					
Temperature	°F	575	265		
Pressure	psig	820	827		
Mass Flow Rate, Liquid	Lb/ hr	0			
Mass Flow Rate, Vapor	Lb/ hr	47,800			
Weight Percent, Liquid / Vapor	wt%	0% / 100%		/	
Density, Liquid / Vapor	Lb/ ft3	0.00 / 1.61		/	
Molecular Weight, Liquid / Vapor	Lb/ Lbmole	/ 21.4		/	
Viscosity, Liquid / Vapor	cp	0.000 / 0.020		/	
Specific Heat, Liquid / Vapor	BTU/ Lb °F	0.000 / 0.740		/	
Thermal Conductivity, Liquid/Vapor	BTU/hr ft °F	0.000 / 0.044		/	
Surface Tension, Liquid	dyne/ cm	/		/	

revision	date	description	by	chk'd	appv'd
Rev.00	10-Jun-13	ISSUED w/ General Arrangement Package (rev00)	TLC	JJB	BDH

MarkWest Liberty Midst.& Res., LLC

EXTERRAN THI TULSA HEATERS INC.

SHO = Superior Quality, Flexibility, Dependability & Modularity

FIRED HEATER DATA SHEET
AMERICAN ENGINEERING SYSTEM of UNITS

J13-802 -HTRds- Rev.00

This document contains confidential information, which is proprietary to THI. This document shall not be used, reproduced or disclosed without the prior written consent of THI.

Owner:	MarkWest Liberty Midstr.& Res., LLC	Owner Ref.:	~~H-5711~~ H-7711, 8711, 9711	Flnt & Rev
Purchaser:	EXTERRAN Energy Solutions, L.P.	Purch. Ref.:	PO 5463168 for US-107259	
Manufacturer:	TULSA HEATERS INC.	THI Ref.:	J13-802 (formerly P13-8387)	
Service:	Regen Gas	Unit No:	Sherwood V 200 MMscfD Cryogenic Gas Plant	
Number:	One	Location:	West Union, WV U.S.A.	
SHO Duty:	12.42 MMBTU/ hr	SHO Model:	SHO.2000	
CMS.Release:	14.16 MMBTU/ hr	CMS Model:	CMS.2500 ULN	
SHOS Flow:	- - - USgal/ min @ ft TDH	SHOS.Model:	n / a	

ADDITIONAL PROCESS OPERATING CONDITIONS

Heater Section	---	RADIANT	CONVECTION	CONVECTION	TOTAL
Operating Case	---	Normal Case	Normal Case	Normal Case	Normal Case
Service	---	Regen Gas	Regen Gas	Service "b"	
Heat Absorption	MMBTU/ hr	8.58	3.84	0.00	12.42
Process Fluid	---	HC Vapor	HC Vapor		
Process Mass Flow Rate, Total	Lb/ hr	40,700	40,700		
Process Bulk Velocity (allow. / calc.)	ft/ s	- - - / 53	- - - / 26	/	
Process Mass Velocity (min./ calc.)	Lb/ s ft2	- - - / 71	- - - / 71	/	
Coking Allowance (dP calcs)	in				
Pressure Drop, Clean (allow. / calc.)	psi	< ------- 10.0	/ 9.4 ------- >	/	
Pressure Drop, Fouled (allow. / calc.)	psi	< -------	/ ------- >	/	
Average Heat Flux (allowable)	BTU/ hr ft2	12,000			
Average Heat Flux (calculated)	BTU/ hr ft2	9,910			
Maximum Heat Flux (allowable)	BTU/ hr ft2				
Maximum Heat Flux (calculated)	BTU/ hr ft2	16,400	8,350		
Fouling Factor, Internal	hr ft2 °F/ BTU	0.001	0.001		
Max. Film Temperature (allow. / calc.)	°F	None / 650	None / 303	/	
Inlet Conditions:					
Temperature	°F	261	120		
Pressure	psig	827	829		
Mass Flow Rate, Liquid	Lb/ hr		0		
Mass Flow Rate, Vapor	Lb/ hr		40,700		
Weight Percent, Liquid / Vapor	wt%		0% / 100%	/	
Density, Liquid / Vapor	Lb/ ft3		0.00 / 2.72	/	
Molecular Weight, Liquid / Vapor	Lb/ Lbmole		/ 17.8	/	
Viscosity, Liquid / Vapor	cp		0.000 / 0.013	/	
Specific Heat, Liquid / Vapor	BTU/ Lb °F		0.000 / 0.619	/	
Thermal Conductivity, Liquid/Vapor	BTU/hr ft °F		0.000 / 0.022	/	
Surface Tension, Liquid	dyne/ cm		7.180 /	/	
Outlet Conditions:					
Temperature	°F	575	261		
Pressure	psig	820	827		
Mass Flow Rate, Liquid	Lb/ hr	0			
Mass Flow Rate, Vapor	Lb/ hr	40,700			
Weight Percent, Liquid / Vapor	wt%	0% / 100%		/	
Density, Liquid / Vapor	Lb/ ft3	0.00 / 1.34		/	
Molecular Weight, Liquid / Vapor	Lb/ Lbmole	/ 17.8		/	
Viscosity, Liquid / Vapor	cp	0.000 / 0.020		/	
Specific Heat, Liquid / Vapor	BTU/ Lb °F	0.000 / 0.760		/	
Thermal Conductivity, Liquid/Vapor	BTU/hr ft °F	0.000 / 0.044		/	
Surface Tension, Liquid	dyne/ cm	3.650 /		/	

revision	date	description	by	chk'd	appv'd
Rev.00	10-Jun-13	ISSUED w/ General Arrangement Package (rev00)	TLC	JJB	BDH

This document contains confidential information, which is proprietary to THI. This document shall not be used, reproduced or disclosed without the prior written consent of THI.

Owner:	MarkWest Liberty Midstr.& Res., LLC	Owner Ref.:	~~H-5711~~ H-7711, 8711, 9711	Flnt
Purchaser:	EXTERRAN Energy Solutions, L.P.	Purch. Ref.:	PO 5463168 for US-107259	&
Manufacturer:	TULSA HEATERS INC.	THI Ref.:	J13-802	Rev
Service:	Regen Gas	Unit No:	Sherwood V 200 MMscfD Cryogenic Gas Plant	
Number:	One	Location:	West Union, WV U.S.A.	
SHO Duty:	8.53 MMBTU/ hr	SHO Model:	SHO.2000	
CMS.Release:	9.42 MMBTU/ hr	CMS Model:	CMS.2500 ULN	

ADDITIONAL PROCESS OPERATING CONDITIONS

Heater Section	---	RADIANT	CONVECTION	CONVECTION	TOTAL	
Operating Case	---	Turndown Case	Turndown Case	Turndown Case	Turndown Case	
Service	---	Regen Gas	Regen Gas	Service "b'		
Heat Absorption	MMBTU/ hr	6.07	2.46	0.00	8.53	
Process Fluid	---	HC	HC			
Process Mass Flow Rate, Total	Lb/ hr	28,500	28,500			[G]
Process Bulk Velocity (allow. / calc.)	ft/ s	--- / 31	--- / 14.4	/		
Process Mass Velocity (min./ calc.)	Lb/ s ft2	--- / 50	--- / 50	/		
Coking Allowance (dP calcs)	in					
Pressure Drop, Clean (allow. / calc.)	psi	< ------- 10 / 4	------- >	/		
Pressure Drop, Fouled (allow. / calc.)	psi	< ------- /	------- >	/		
Average Heat Flux (allowable)	BTU/ hr ft2	12,000				
Average Heat Flux (calculated)	BTU/ hr ft2	7,760				
Maximum Heat Flux (allowable)	BTU/ hr ft2					
Maximum Heat Flux (calculated)	BTU/ hr ft2	14,000	12,100			
Fouling Factor	hr ft2 °F/ BTU	0.001	0.001			
Corrosion or Erosion Characteristics	---					
Max. Film Temperature (allow. / calc.)	°F	/ 654	/ 326	/		
Inlet Conditions:						
Temperature	°F	251	120			
Pressure	psig	823	824			
Mass Flow Rate, Liquid	Lb/ hr		0			
Mass Flow Rate, Vapor	Lb/ hr		28,500			[G]
Weight Percent, Liquid / Vapor	wt%		0% / 100%	/		
Density, Liquid / Vapor	Lb/ ft3		0.0 / 3.45	/		
Molecular Weight, Vapor	Lb/ Lbmole		/ 21.4	/		
Viscosity, Liquid / Vapor	cp		0.000 / 0.014	/		
Specific Heat, Liquid / Vapor	BTU/ Lb °F		0.000 / 0.616	/		
Thermal Conductivity, Liquid/Vapor	BTU/hr ft °F		0.000 / 0.022	/		
Surface Tension, Liquid	dyne/ cm		0.000 /	/		
Outlet Conditions:						
Temperature	°F	575	251			
Pressure	psig	820	823			
Mass Flow Rate, Liquid	Lb/ hr	0				
Mass Flow Rate, Vapor	Lb/ hr	28,500				
Weight Percent, Liquid / Vapor	wt%	0% / 100%		/		
Density, Liquid / Vapor	Lb/ ft3	0.0 / 1.61		/		
Molecular Weight, Liquid / Vapor	Lb/ Lbmole	/ 21.4		/		
Viscosity, Liquid / Vapor	cp	0.000 / 0.020		/		
Specific Heat, Liquid / Vapor	BTU/ Lb °F	0.000 / 0.740		/		
Thermal Conductivity, Liquid/Vapor	BTU/hr ft °F	0.000 / 0.044		/		
Surface Tension, Liquid	dyne/ cm	0.000 /		/		

Rev.00	10-Jun-13	ISSUED w/ General Arrangement Package (rev00)	TLC	JJB	BDH
revision	date	description	by	chk'd	appv'd

MarkWest Liberty Midst.& Res., LLC EXTERRAN THI TULSA HEATERS INC.

FIRED HEATER DATA SHEET
AMERICAN ENGINEERING SYSTEM of UNITS

SHO = Superior Quality, Flexibility, Dependability & Modularity

J13-802 -HTRds- Rev.00

This document contains confidential information, which is proprietary to THI. This document shall not be used, reproduced or disclosed without the prior written consent of THI.

Fint & Rev

COMBUSTION DESIGN CONDITIONS

Overall Performance:		RADIANT	CONVECTION	CONVECTION	TOTAL
Operating Case	---	Design Case	Design Case	Design Case	Design Case
Service	---	Regen Gas	Regen Gas	Service "b"	
Excess Air	mol%				15.0%
Calculated Heat Release (LHV)	MMBTU/ hr				16.54
Guaranteed Efficiency	HR%				84.0%
Calculated Efficiency	HR%				86.0%
Radiation Loss	HR%				2.00%
Flow Rate, Combustion Gen./ Imported	Lb/ hr	16,100	/ 0		16,100
Flue Gas Temperature Leaving Section	°F	1,470	530		
Flue Gas Mass Velocity	Lb/ sec ft2		0.387		

Fuel(s) Data:		Design Mol.Wt.	Gas2 Blend		Design Fuel Oil
LHV	BTU/ scf	911	1,037		---
LHV	BTU/ Lb	21,378	20,445		
P @ Burner	psig	30	30		
T @ Burner	°F	100	100		
MW	Lb/ Lbmole	16.17	19.24		
μ @ ??? °F	cp	---	---		
μ @ ??? °F	cp	---	---		
Atomizing Media		---	---		
Atom. Media P & T		---	---		
Components:					
N	wt%	---	---		
S	wt%	---	---		
Ash	wt%	---	---		
Ni	ppm	---	---		
Va	ppm	---	---		
Na	ppm	---	---		
Fe	ppm	---	---		
H2	mol%	0.00	0.00		---
O2	mol%	0.00	0.00		---
N2 + Ar	mol%	0.22	1.49		---
CO	mol%	0.00	0.00		---
CO2	mol%	0.02	0.47		---
CH4	mol%	99.33	80.22		---
C2H6	mol%	0.41	15.26		---
C2H4	mol%	0.00	0.00		---
C3H8	mol%	0.02	2.39		---
C3H6	mol%	0.00	0.00		---
C4H10	mol%	0.04	0.17		---
C4H8	mol%	0.00	0.00		---
C5H12	mol%	0.00	0.00		---
C5H10	mol%	0.00	0.00		---
C6+	mol%	0.00	0.00		---
H2S	mol%	0.00	0.00		---
SO2	mol%	0.00	0.00		---
NH3	mol%	0.00	0.00		---
H2O	mol%	0.07	0.00		---
spare	mol%	0.00	0.00		---

Burner Design:		
OEM	---	CALLIDUS Technologies, LLC
Type	---	Enhanced IFGR — ULTRA Low NOx
Quantities	---	1 Model 1 and 0 Model 2 — Burners
Model No.1	---	CUBL-8W-HC — Cylindrical
Model No.2	---	None
Windbox	---	yes ... — w/ parallel blade registers
Location	---	EndWall Center ... — Horizontally Fired
Pilot Design:		
Type	---	INTERMITTENT — Suitable for FD
Model	---	by O.E.M.
Ignition	---	Electric — requires elec.ign.system
Heat Release	--	> 90,000 BTU/ hr on ... — Design Gas

Burner Performance:		Model 1	Model 2	
Minimum Heat Release	MMBTU/ hr	3.60		[B]
Design Heat Release	MMBTU/ hr	16.54		[C]
Maximum Heat Release	MMBTU/ hr	18.00		[D]
Burner Turndown	Max:Min	5.00		[E]
Volumetric Ht. Release	BTU/ hr ft3	12,030		[F]
Pressure @ Arch	inH2O	0.70		
Pressure @ Burner	inH2O	5.00		
Combustion Air T @ Burner	°F	60		
Flue Gas T @ Burner	°F	1,470		
Emissions - Guaranteed:		<-- Combined -->		
Basis of Guarantee	---	3.0% O2, dry (LHV)		
NOx Emissions	Lb/MMBTU	0.040	30 ppm	[B]
SOx Emissions	Lb/MMBTU	no quote		
CO Emissions	Lb/MMBTU	0.040	49 ppm	[C]
UHC Emissions	Lb/MMBTU	0.007	15 ppm	[D]
VOC Emissions	Lb/MMBTU	0.019	15 ppm	[E]
SPM10 Emissions	Lb/MMBTU	0.013	15 ppm	[F]
Noise Emissions	dBA @ 3ft	85.0	------->	

Combustion Mgmt. System (CMS) Features:	
Proposed OEM	CALLIDUS Technologies
BMS Functions	Yes; OEM's Standard w/ EESLP Upgrades
Comb. Controls	Yes; OEM's Standard w/ EESLP Upgrades
Duty Controls	Yes; OEM's Standard w/ EESLP Upgrades
Main/ Pilot Trains	Yes; OEM's Standard w/ EESLP Upgrades
Local Panel	Yes; OEM's Standard w/ EESLP Upgrades
FD System	Yes; One FD Fan sized per API Std560
Area Class	Class I, Div. 2, Groups C&D, Temp T3

Nominal Flame Clearances: from burner CL ...		Vertical	Horizontal
to Tube CL, API	ft	9.00	6.00
to Tube CL, calc.	ft	3.02	3.02
to Refrac., calc.	ft	n / a	22.70

Net Flame Clearances:	
Est. Flame Size	approx. 18 ft Long x 2.66 ft Diameter
Hor Clearance	3' 0" NET Tube Clearance
Vert. Clearance	3' 0" NET Tube Clearance
Axial Clearance	6 ft NET Refractory Clearance (to Arch face)

Owner Ref.: ~~H-5711~~ A-7711, 8711, 9711 THI Ref.: J13-802

Flnt & Rev

COMBUSTION DESIGN CONDITIONS

Overall Performance:

		RADIANT	CONVECTION	CONVECTION	TOTAL
Operating Case	---	Normal Case	Normal Case	Normal Case	Normal Case
Service	---	Regen Gas	Regen Gas	Service "b"	
Excess Air	mol%				15.0%
Calculated Heat Release (LHV)	MMBTU/ hr				14.16
Guaranteed Efficiency	HR%				84.0%
Calculated Efficiency	HR%				87.7%
Radiation Loss	HR%				2.00%
Flow Rate, Combustion Gen./ Imported	Lb/ hr	13,800	/ 0		13,800
Flue Gas Temperature Leaving Section	°F	1,400	460		
Flue Gas Mass Velocity	Lb/ sec ft2		0.331		

Fuel(s) Data:

		Design Mol.Wt.	Gas2 Blend		Design Fuel Oil
LHV	BTU/ scf	911	1,037		---
LHV	BTU/ Lb	21,378	20,449		
P @ Brnr	psig	30	30		
T @ Brnr	°F	100	100		
MW	Lb/ Lbmole	16.17	19.24		
μ @ ??? °F	cp	---	---		
μ @ ??? °F	cp	---	---		
Atomizing Media		---	---		
Atom. Media P & T		---	---		

Components:

N	wt%	---	---		
S	wt%	---	---		
Ash	wt%	---	---		
Ni	ppm	---	---		
Va	ppm	---	---		
Na	ppm	---	---		
Fe	ppm	---	---		
H2	mol%	0.00	0.00		---
O2	mol%	0.00	0.00		---
N2 + Ar	mol%	0.22	1.49		---
CO	mol%	0.00	0.00		---
CO2	mol%	0.02	0.47		---
CH4	mol%	99.33	80.22		---
C2H6	mol%	0.41	15.26		---
C2H4	mol%	0.00	0.00		---
C3H8	mol%	0.02	2.39		---
C3H6	mol%	0.00	0.00		---
C4H10	mol%	0.04	0.17		---
C4H8	mol%	0.00	0.00		---
C5H12	mol%	0.00	0.00		---
C5H10	mol%	0.00	0.00		---
C6+	mol%	0.00	0.00		---
H2S	mol%	0.00	0.00		---
SO2	mol%	0.00	0.00		---
NH3	mol%	0.00	0.00		---
H2O	mol%	0.07	0.00		---
spare	mol%	0.00	0.00		---

Burner Design:

OEM	---	CALLIDUS Technologies, LLC
Type	---	Enhanced IFGR — ULTRA Low NOx
Quantities	---	1 Model 1 and 0 Model 2 — Burners
Model No.1	---	CUBL-8W-HC — Cylindrical
Model No.2	---	None
Windbox	---	yes ... — w/ parallel blade registers
Location	---	EndWall 0.00 — Horizontally Fired

Pilot Design:

Type	---	INTERMITTENT — Suitable for FD
Model	---	by O.E.M.
Ignition	---	Electric — requires elec.ign.system
Heat Release	--	> 90,000 BTU/ hr on ... — Design Gas

Burner Performance:

		Model 1	Model 2	
Minimum Heat Release	MMBTU/ hr	3.60		[B]
Calculated Heat Release	MMBTU/ hr	14.16		[C]
Maximum Heat Release	MMBTU/ hr	18.00		[D]
Burner Turndown	Max:Min	5.00		[E]
Volumetric Ht. Release	BTU/ hr ft3	12,030		[F]
Draft @ Arch	inH2O	0.70		
Draft @ Burner	inH2O	5.00		
Combustion Air T @ Burner	°F	60		
Flue Gas T @ Burner	°F	1,470		

Emissions - Guaranteed:

		<-- Combined -->		
Basis of Guarantee	---	3.0% O2, dry (LHV)		
NOx Emissions	Lb/MMBTU	0.040	30 ppm	[B]
SOx Emissions	Lb/MMBTU	no quote		
CO Emissions	Lb/MMBTU	0.040	49 ppm	[C]
UHC Emissions	Lb/MMBTU	0.007	15 ppm	[D]
VOC Emissions	Lb/MMBTU	0.019	15 ppm	[E]
SPM10 Emissions	Lb/MMBTU	0.013	15 ppm	[F]
Noise Emissions	dBA @ 3ft	85.0		

Combustion Mgmt. System (CMS) Features:

Proposed OEM	CALLIDUS Technologies
BMS Functions	Yes; OEM's Standard w/ EESLP Upgrades
Comb. Controls	Yes; OEM's Standard w/ EESLP Upgrades
Duty Controls	Yes; OEM's Standard w/ EESLP Upgrades
Main/ Pilot Trains	Yes; OEM's Standard w/ EESLP Upgrades
Local Panel	Yes; OEM's Standard w/ EESLP Upgrades
FD System	Yes; One FD Fan sized per API Std560
Area Class	Class I, Div. 2, Groups C&D, Temp T3

Nominal Flame Clearances:

from burner CL ...		Vertical	Horizontal
to Tube CL, API	ft	9.00	6.00
to Tube CL, calc.	ft	3.02	3.02
to Refrac., calc.	ft	n/a	22.70

Net Flame Clearances:

Est. Flame Size	approx. 18 ft Long x 2.66 ft Diameter
Hor Clearance	3' 0" NET Tube Clearance
Vert. Clearance	3' 0" NET Tube Clearance
Axial Clearance	6 ft NET Refractory Clearance (to Arch face)

COMBUSTION DESIGN CONDITIONS

Overall Performance:		RADIANT	CONVECTION	RADIANT	CONVECTION
Operating Case	---	Turndown Case	Turndown Case	Turndown Case	Turndown Case
Service	---	Regen Gas	Regen Gas	Service "b'	
Excess Air	mol%				15.0%
Calculated Heat Release	MMBTU/ hr (LHV)				9.42
Guaranteed Efficiency	HR%				84.0%
Calculated Efficiency	HR%				90.6%
Radiation Loss	HR%				2.0%
Flow Rate, Combustion Gen./ Imported	Lb/ hr	9,200	/ 0		
Flue Gas Temperature Leaving Section	°F	1,187	360		
Flue Gas Mass Velocity	Lb/ sec ft2		0.220		

Fuel(s) Data:		Design Mol.Wt.	Gas2 Blend		Design Fuel Oil
LHV	BTU/ scf	911	1,037		
LHV	BTU/ Lb	21,378	20,449		
P @ Burner	psig	30	30		
T @ Burner	°F	100	100		
MW	Lb/ Lbmole	16.17	19.24		
μ @ ??? °F	cp	---	---		
μ @ ??? °F	cp	---	---		
Atomizing Media		---	---		
Atom. Media P & T		---	---		
Components:					
N	wt%	---	---		
S	wt%	---	---		
Ash	wt%	---	---		
Ni	ppm	---	---		
Va	ppm	---	---		
Na	ppm	---	---		
Fe	ppm	---	---		
H2	mol%	0.00	0.00		---
O2	mol%	0.00	0.00		---
N2 + Ar	mol%	0.22	1.49		---
CO	mol%	0.00	0.00		---
CO2	mol%	0.02	0.47		---
CH4	mol%	99.33	80.22		---
C2H6	mol%	0.41	15.26		---
C2H4	mol%	0.00	0.00		---
C3H8	mol%	0.02	2.39		---
C3H6	mol%	0.00	0.00		---
C4H10	mol%	0.04	0.17		---
C4H8	mol%	0.00	0.00		---
C5H12	mol%	0.00	0.00		---
C5H10	mol%	0.00	0.00		---
C6+	mol%	0.00	0.00		---
H2S	mol%	0.00	0.00		---
SO2	mol%	0.00	0.00		---
NH3	mol%	0.00	0.00		---
H2O	mol%	0.07	0.00		---
spare	mol%	0.00	0.00		---

Burner Design:		
OEM	---	CALLIDUS Technologies, LLC
Type	---	Enhanced IFGR — ULTRA Low NOx
Quantities	---	1 Model 1 and 0 Model 2 — Burners
Model No.1	---	CUBL-8W-HC — Cylindrical
Model No.2	---	None
Windbox	---	yes ... — w/ parallel blade registers
Location	---	EndWall Center ... — Horizontally Fired
Pilot Design:		
Type	---	INTERMITTENT — Suitable for FD
Model	---	by O.E.M.
Ignition	---	Electric — requires elec.ign.system
Heat Release	--	> 90,000 BTU/ hr on ... — Design Gas

Burner Performance:		Model 1	Model 2
Minimum Heat Release	MMBTU/ hr	3.60	
Calculated Heat Release	MMBTU/ hr	9.42	
Maximum Heat Release	MMBTU/ hr	18.00	
Burner Turndown	Max:Min	5.00	
Volumetric Ht. Release	BTU/ hr ft3	12,030	
Draft @ Arch	inH2O	0.70	
Draft @ Burner	inH2O	5.00	
Combustion Air T @ Burner	°F	60	
Flue Gas T @ Burner	°F	1,470	
Emissions - Guaranteed:		<-- Combined -->	
Basis of Guarantee	---	3.0% O2, dry (LH	
NOx Emissions	Lb/MMBTU	0.040	30 ppm
SOx Emissions	Lb/MMBTU	no quote	
CO Emissions	Lb/MMBTU	0.040	49 ppm
UHC Emissions	Lb/MMBTU	0.007	15 ppm
VOC Emissions	Lb/MMBTU	0.019	15 ppm
SPM10 Emissions	Lb/MMBTU	0.013	15 ppm
Noise Emissions	dBA @ 3ft	85.0	

Combustion Mgmt. System (CMS) Features:	
Proposed OEM	CALLIDUS Technologies
BMS Functions	Yes; OEM's Standard w/ EESLP Upgrades
Comb. Controls	Yes; OEM's Standard w/ EESLP Upgrades
Duty Controls	Yes; OEM's Standard w/ EESLP Upgrades
Main/ Pilot Trains	Yes; OEM's Standard w/ EESLP Upgrades
Local Panel	Yes; OEM's Standard w/ EESLP Upgrades
FD System	Yes; One FD Fan sized per API Std560
Area Class	Class I, Div. 2, Groups C&D, Temp T3

Nominal Flame Clearances: from burner CL ...		Vertical	Horizontal
to Tube CL, API	ft	9.00	6.00
to Tube CL, calc.	ft	3.02	3.02
to Refrac., calc.	ft	n / a	22.70

Net Flame Clearances:	
Est. Flame Size	approx. 18 ft Long x 2.66 ft Diameter
Hor Clearance	3' 0" NET Tube Clearance
Vert. Clearance	3' 0" NET Tube Clearance
Axial Clearance	6 ft NET Refractory Clearance (to Arch face)

PRESSURE PARTS DESIGN

Coil Design:		**RADIANT**	**SHIELD**	**CONVECTION**	**CONVECTION**
Service	---	Regen Gas	Regen Gas	Regen Gas	Service "b"
Design Basis for Tube Temperature	---	API Standard 530	API Standard 530	API Standard 530	
Design Basis for Tube Wall Thickness	---	ASME Sec.VIII -1	ASME Sec.VIII -1	ASME Sec.VIII -1	
Design Life	hr	100,000	100,000	100,000	
Design Pressure (elastic / rupture)	psig	1,100 /	1,100 /	1,100 /	
Design Fluid Temperature	°F	590	280	280	
Design Temperature Allowance	°F	15	113	113	
Design Corrosion Allowance (tubes/fittin	in	0.063 / 0.063	0.063 / 0.063	0.063 / 0.063	/
Maximum Tube Temperature (clean)	°F	673			
Maximum Tube Temperature (fouled)	°F	695	382	382	
Design Tube Temperature	°F	725	525	525	
Inside Film Coefficient	BTU/ hr ft2 °F	288	206	206	
Weld Inspection	RT or Other	100 of 100%	100 of 100%	100 of 100%	
Weld Heat Treatment	s.rel., t.stab. or none	None	None	None	
Hydrostatic Test Pressure	psig	per API	per API	per API	
Coil Arrangement:		**Horizontal**	**Horizontal**	**Horizontal**	
Coil Type	---	Helical	Serpentine	Serpentine	
Tube Material (pipe or tube spec)	ASTM	SA106 Gr.B	SA106 Gr.B	SA106 Gr.B	
Supplementary Mfg Requirements	ASTM	None	None	None	
Tube Outside Diameter	in	4.500	4.500	4.500	
Tube Wall Thickness (aw / mw)	in	0.337 / 0.295	0.337 / 0.295	0.337 / 0.295	/
Number of Cells (radiant or convection)	---	1	1	1	
Number of Flow Passes (total / cell)	---	2 / 2	2 / 2	2 / 2	/
Number of Tubes per Row (total / cell)	---		4 / 4	4 / 4	/
Overall Tube (1 turn in radiant) Length	ft	28.27	11.50	11.50	
Effective Tube Length / Helix Diameter	ft	28.27 / 9.00	9.92	9.92	
Number of Turns or Tubes (total / pass)	---	26.0 / 13.0	8 / 8	0 / 0	/
Total Exposed Surface	ft2	866	93	0	
Number of Ext.Surf. Tubes (total / cell)	---	0 / 0	0 / 0	16 / 16	/
Total Exposed Surface	ft2	0	0	1,672	
Tube Spacing (horizontal / tube centers)	in	--- / 10.00	8.00 / 8.00	8.00 / 8.00	/
Tube Spacing (horizontal to refractory)	in	6.00	4.00	4.00	
Coil Fittings:		**Regen Gas**	**Regen Gas**	**Regen Gas**	
Fitting Type	---	SR 90° Elbows	SR 180° U-Bends	SR 180° U-Bends	
Fitting Material	ASTM	SA234 WPB	SA234 WPB	SA234 WPB	
Supplementary Mfg Requirements	ASTM	None	None	None	
Fitting Outside Diameter	in	4.500	4.500	4.500	
Fitting Wall Thickness (aw / mw)	in	0.337 / 0.295	0.337 / 0.295	0.337 / 0.295	/
Fitting Location	internal or external	Internal	External	External	
Tube Attachment	welded or rolled	Welded	Welded	Welded	
Coil Terminals:		**Outlet**		**Inlet**	
Terminal Type	beveled or flanged	Flanged		Flanged	
Flange Material	ASTM	SA105		SA105	
Supplementary Mfg Requirements	ASTM	None		None	
Flange Size and Rating	NPS/ ASME	4" NPS / 900 #		4" NPS / 900 #	
Flange Type	RFWN or RTJ	RFWN		RFWN	
Location	---	Burner Endwall		Arch Endwall	
Extended Surface:			**CONVECTION**	**CONVECTION**	**CONVECTION**
Service	---		Regen Gas	Regen Gas	Future
Fin or Stud Row Number	starting @ bottom		No.1 / No.2	No.3 / No.4	None /
Ext. Surface Type	seg.fins, solid fins, studs		HF Seg. Fins	HF Seg. Fins	
Fin/Stud Material	---		C.S. / C.S.	C.S. / C.S.	/
Fin/Stud Dimensions	H x T, in		1.00 x 0.060"	1.00 x 0.060"	
Fin/Stud Density	fin/ in or stud/ plane		2.00 fpi / 3.00 fpi	4.00 fpi / 5.00 fpi	/
Maximum Fin/Stud Temperature	°F		690 / 600	530 / 440	/

Owner Ref.: ~~H-5711~~H - 7711,8711,9711 THI Ref.: J13-802

Flnt & Rev

PRESSURE PARTS DESIGN (continued)

		RADIANT	SHIELD	CONVECTION	CONVECTION
Crossovers:					
Type, location / connections	---	External	/ Flanged	None	
Tube / Fittings Material	ASTM	SA106 Gr.B	/ SA234 WPB		
Tube & Fitting OD / Thickness (aw)	in	4.500	/ 0.337		
Inlet Manifold(s):	type			by THI	
Location	---			Top - Term. End	
Pipe Material	ASTM			SA106 Gr.B	
Fittings Material	ASTM			SA234 WPB	
Design Basis for Manifold Thickness	---			ASME B31.3	
Design Conditions (temp./press.)	°F/ psig			280 / 1,100	
Outside Diameters, each Branch	in			8" NPS	
Wall Thickness(es); aw ~~or mw~~	in			sch80 (0.500"aw)	
Tube Connection Type	beveled or flanged			Welded	
End Types (terminal/ dead)	beveled or flanged			Flanged / W.Cap	
Terminal Flange Material	ASTM			SA105	
Terminal Flange Size and Rating	NPS/ ASME			8"NPS / 900#	
Terminal Flange Style	RFWN or RTJ			RFWN	
Outlet Manifold(s):	type	by THI			
Location	---	Burner Endwall			
Pipe Material	ASTM	SA106 Gr.B			
Fittings Material	ASTM	SA234 WPB			
Design Basis for Manifold Thickness	---	ASME B31.3			
Design Conditions (temp./press.)	°F/ psig	590 / 1,100			
Outside Diameters, each Branch	in	8" NPS			
Wall Thickness(es); aw ~~or mw~~	in	sch80 (0.500"aw)			
Tube Connection Type	beveled or flanged	Welded			
End Types (terminal/ dead)	beveled or flanged	Flanged / W.Cap			
Terminal Flange Material	ASTM	SA105			
Terminal Flange Size and Rating	NPS/ ASME	8"NPS / 900#			
Terminal Flange Style	RFWN or RTJ	RFWN			

COIL & MANIFOLD SUPPORTS DESIGN

		RADIANT	SHIELD	CONVECTION	CONVECTION
Tube Supports:					
Service	---	Regen Gas	Regen Gas	Regen Gas	Service "b"
Location	Top, Bottom, Ends	Bottom	Ends	Ends	
Support Type	casting, tubesht, spring, etc.	HD Angles	Welded Tbsheets	Welded Tbsheets	
Support Thicknesses	in	2 x 2 x 0.250	0.375	0.375	
Support Materials	ASTM	A240 T304H	A36 CS	A36 CS	
Support Temperatures (calc./ design)	°F / °F	1,055 / 1,250	566 / 720	566 / 720	/
TbSht Ferrules Thickness / Materials	in/ ASTM	--- / ---	14 ga. / 304 SS	14 ga. / 304 SS	/
Refractory & Anchor Materials & Types	---	none	per refrac. section	per refrac. section	
Intermediate Guides & Supports:		One	None	None	
Location	---	Top			
Guide/ Support Type	casting, spring, etc.	HD Angles			
Material	ASTM	A240 T304H			
Spacing, average	ft				
Tube Guides:	Top, Bottom, Ends	None	None	None	
Material	ASTM				
Manifold Supports:		Outlet Manifold		Intlet Manifold	
Material	ASTM	A36		A36	
Materials Design & Supply	---	by THI		by THI	
Location	Top, Bottom, Ends	Burner Endwall		Top - Term. End	
Support Type	roller, shoe, spring, etc.	Simple Shelf		Simple Shelf	
Number of Supports	---	One (1)		One (1)	

Fint & Rev

CASING / REFRACTORY SYSTEMS DESIGN

		BURNER ENDWALL	BURNER FIREWALL	SHIELDED SIDEWALLS	ARCH ENDWALL
Radiant Section Design:					
Total Refractory Thickness	in	5.0	6.0	3.0	5.0
Hot Face Temperature (design)	°F	2,000°	2,600°	2,000°	2,600°
Hot Face Temperaure (calculated)	°F	1,470	1,670	1,055	1,470
Hot Face Layer	in/ - - -	1/ 8# CF Blanket	1/ 8# Cerachem	1/ 8# CF Blanket	1/ 8# Cerachem
Back-Up Layer No.1	in/ - - -	1/ 8# CF Blanket	2/ 8# CF Blanket	2/ 6# CF Blanket	1/ 8# CF Blanket
Back-Up Layer No.2	in/ - - -	3/ 6# CF Blanket	3/ 6# CF Blanket	None	3/ 6# CF Blanket
Foil Vapor Barrier	in/ - - -	None	None	None	None
Castable Reinforcement (SS Needles)	wt%	None	None	None	None
Anchors / Tie Backs:	- - -	Pins & Clips	Pins & Clips	Pins & Clips	Pins & Clips
Material	- - -	310 S.S.	310 S.S.	304 S.S.	310 S.S.
Attachment	- - -	Welded	Welded	Welded	Welded
Casing:					
Material	in/ ASTM	0.1875 / A36	0.1875 / A36	10 ga./ A36	0.1875 / A36
Internal Coating	- - -	None	None	None	None
External Temperature, Typical	°F	180	195	180	180
Comments / Clarifications	- - -	w/ cfb wraps	24 in Perimeter	w/o cfb wraps	w/ cfb wraps
		SHOP Installed	SHOP Installed	SHOP Installed	SHOP Installed

		SIDEWALLS		ENDWALLS	
Convection Section Design:		SHIELD	FINNED	TUBESHEETS	HEADER BOXES
Total Refractory Thickness	in	3.0	3.0	3.0	2.0
Hot Face Temperature (design)	°F	2,000°	2,000°	2,200°	2,000°
Hot Face Temperaure (calculated)	°F	1,000	1,000	1,000	467
Hot Face Layer	in/ - - -	1/ 8# CF Blanket	1/ 8# CF Blanket	3/ Sparlite 55HS	1/ 8# CF Blanket
Back-Up Layer No.1	in/ - - -	2/ 6# CF Blanket	2/ 6# CF Blanket	None	1/ 8# CF Blanket
Back-Up Layer No.2	in/ - - -	None	None		
Foil Vapor Barrier	in/ - - -	None	None	None	None
Castable Reinforcement (SS Needles)	wt%	None	None	None	None
Anchors / Tie Backs:	- - -	Pins & Clips	Pins & Clips	Bullhorns	Pins & Clips
Material	- - -	310 S.S.	304 S.S.	304 S.S.	304 S.S.
Attachment	- - -	Welded	Welded	Welded	Welded
Casing:					
Material	in/ ASTM	10 ga./ A36	10 ga./ A36		10 ga./ A36
Internal Coating	- - -	None	None	None	None
External Temperature, Typical	°F	180	180		180
Comments / Clarifications	- - -	Cleaning / Sootblowing lanes: none of 0' - 0" height.			Bolted Assembly
	- - -	SHOP Installed	SHOP Installed	SHOP Installed	SHOP Installed

		FLUE GAS DUCTS			
Stack & Uptakes Design:		BREECHING	15° TRANSITION	DISCH. DUCT	
Quantity		One	One	One	
Type / Location	- - -	Full L / Conv	Full L / Conv	Self.Spt/ Grade	
Length / Metal Outside Diameter (top)	ft/ ft	10.50 / n/a	10.50 / n/a	7 / 2.50	
Discharge Elev., minimum/ calculated	ft/ ft	n/a / n/a	n/a / n/a	20 / 24	
Total Refractory Thickness	in	1.0	0.0	0.0	
Hot Face Temperature (design)	°F	2,000°			
Hot Face Temperaure (calculated)	°F	530	530	530	
Hot Face Layer	in/ - - -	1/ 8# CF Blanket	None	None	
Back-Up Layer No.1	in/ - - -	None			
Castable Reinforcement (SS Needles)		None			
Anchors / Tie Backs:	- - -	Pins & Clips			
Material	- - -	304 S.S.			
Attachment	- - -	Welded			
Casing:					
Minimum Thickness/ Material	in/ ASTM	10 ga./ A36	0.1875 / A36	0.1875 / A36	
Corrosion Allowance	in	None	None	0.0625	
Internal Coating	- - -	None	None	None	
External Temperature, Typical	°F	180	530	530	
Comments / Clarifications	- - -	SHOP Installed			

Fint & Rev

MECHANICAL / STRUCTURAL DESIGN BASIS

Refractory & Coatings Design:

Refractory Design	**Per Std560: 180°F Avg. Casing Temperature** @ Ambient Conditions of 0 MPH & 80°F
Refractory Dryout	SHOP dryout = None // FIELD dryout is INCLUDED in SHO Commissioning Procedure
Coating, Internal	None
Coating, External	3.0- 4.0 dftmil Dimetcote 9 (flat green) IOZ Primer + 1.5- 2.0 dftmil PITT-THERM 97-724 Series Air Dry Silicone (Federal Standard 595B # 16132 Gray) TopCoat on SSPC-SP6 Surfaces; cont.service to 750 °F.

Applicable Standards:

API	Standard 560, Fired Heaters for General ...	ASTM	refractories per C27, C155, C401 & C612
API	Standard 530, Calculation of Heater-tube ...	AISC	Specification for Design, ... Steel for Buildings
ASME	Boiler & Pressure Vessel Code, I thru IX	AWS	D 1.1; Structural Welding Code
ASME	B31.3, Code for Process Piping	NFPA	70; National Electrical Code
ASTM	tube/ smls pipe/ fitting spec's noted herein	NFPA	87; Recommended Practice for Fluid Heaters

Wind Design:

Spec. or Standard	ASCE 7 -05
Design Variables	100 mph, ED: C,
Design Variables	OC: III, WIF: 1.15, TF: 1.0

Seismic Design:

Spec. or Standard	ASCE 7 -05
Design Variables	Ss: 0.5, S1: 0.15, SC: D,
Design Variables	OC: III, SUG: II, SIF: 1.25

Physical Design:

Plot Limitations	None
Tube Limitations	None
Firebox Pressure	Positive; approximately +1.5 inH2O
Ambient Temp's	-20 °F Min/ 60 °F Dsn/ 100 °F Max

Site Design Basis:

Site Elevation	7000	ft AMSL /	2134	m AMSL
Stack Design Temp.	90	°F /	32	°C
FG Discharge Elev., min.	20	ft AG /	6.1	m AG
Area Classification	Class I, Div. 2, Groups C&D, Temp T3			

MAJOR SUBSYSTEMS & ACCESSORIES

Major Services & Subsystems

Process Design	INCLUDED in SHO.2000
Mechanical Design	INCLUDED in SHO.2000
Structural Design	INCLUDED in SHO.2000
Radiant Section	INCLUDED in SHO.2000
Convection Section	INCLUDED in SHO.2000
Combustion Mgmt	INCLUDED in CMS.2500 ULN
Burner Piping	INCLUDED in CMS.2500 ULN
Forced Draft System	INCLUDED in CMS.2500 ULN

Major Accessories:

Casing/ Tube Seals	8	TubeSox; Radiant & Conv.
Observation Doors	3	3 in Dia. w/ H.T. glass
Observation Doors	None	
Access Doors	1	Std 24" x 24"
Access Doors	None	
Tube Pulling Doors	None	
Pressure Relief Doors	None	
Expansion Joints	None	

Casing Penetrations

Fbox Purge/ Snuff	2	2"NPS 150# RFWN's
CA Temperature	None	
CA Pressure	None	
FG Temperature	2	1.5"NPS 3000# Coupling
FG Pressure	2	1.5"NPS 3000# Coupling
FG Composition	2	1.5"NPS 3000# Coupling
FG Comp. (AE - O2)	1	4"NPS 150# RFWN's
FG Comp. (AE - O2)	1	FIREYE Flange 35-381-2
FG Comp. (AE - EPA)	None	
FG Comp. (AE - CEM.	None	

Pressure Part Penetrations

Coil TSTC's, Radiant	None
Coil TSTC's, Convection	0
Process TI conn's	None
Process PI conn's	None
Velocity Steam conn's	None
S/A Decoking conn's	None
Vent / Drain conn's	None
spare	
spare	
spare	

Dampers:

	FD Fan (blower) qty = 0	Uptake Ducts qty = 0	Stack qty = 0
Function	Note:		Note:
Design	Fan inlet damper is inappropriate		Stack Damper (which provides draft
Materials	for forced draft SHO's where O2		control) is inappropriate for forced
Bearings	Control is provided by the CMS O2		draft SHO's where the combustion
Operator	Trim Module which controls the fan		conditions are controlled real-time
Positioner	(blower) motor's VFD/ VSD. Refer		via the CMS.
Instruments	to FDFANds for details.		

Sootblowers:

	Qty.	Type	Location	FG T	Material	Steam T & P	O.E.M. / Ref.
Lane 1:	None						
Lane 2 :	None						

Fint & Rev

SHO.2000 OPTION PACKAGES

	Package Name	Package Description
☐	Artic Package A;	adds upgrades for operations in below freezing weather (ie, a preheater)
☐	Artic Package B;	Package A + upgrades for -40 C/F applications (ie, to structure & coil)
■	Burner Package;	upgrades UNCLASSIFIED CMS to Class I, Division 2, Groups C&D
■	Code Stamp Package;	adds ASME Section I or Section VIII Code Stamp to coil
☐	Double Duty Package;	doubles duty and flow capabilities 'in a "double decker" or "side-by-side" configuration
☐	Efficiency Package;	adds a second module to the convection section (to boost thermal efficiency)
☐	FoodService Package;	adds upgrades for compliance with Foodservice Industry standards
☐	Go Green Package	adds New World, Ultra Low NOx & Xtra Efficienty Packages
☐	Gulf of Mexico Pckge;	adds upgrades to comply with GoM Offshore standards & expectations
☐	HealthCare Package;	adds upgrades for compliance with Healthcare Industry standards
☐	ISO 13705 Package;	adds upgrades for compliance with ISO 13705 / API STANDARD 560
☐	Jungle Package;	adds upgrades to support tropical applications (e.g., tropicalized motors)
☐	King & Queen Package;	adds upgrades to support European applications (e.g., compliance with PED)
☐	Liquid Fuels Pckge A:	adds ash-free air-atomized diesel firing capabilities (w/o sootblowers)
☐	Liquid Fuels Pckge B:	adds Package A + sootblowers (for firing "metals free" fuel oils)
☐	Liquid Fuels Pckge C:	adds Package B + upgraded supports & refractories (for oils w/ hvy metals)
☐	Mining Package;	adds upgrades for compliance with metals and Mining Industry standards
☐	Mobility Package;	adds a subframe and suspension to create a "heater on wheels" (ie, asphalt service)
☐	New World Package;	adds treatment systems to dramatically reduce NOx and/or CO emissions
☐	Oil Circulation Pckge:	adds a circulation skid - standard sizes from 330 to 4,400 USgpm
☐	Oil Filtration Package:	adds hot oil filtration module
☐	PipeLine Package;	alters design to accommodate "high mass flow / low delta T" applications
☐	Quiet Package;	reduces noise to 80 dBA @ 3 ft/ 1 m; ideal for factory applications
☐	Rocky Mtn Package;	adds upgrades to support high altitude / lower atm. pressure operations
☐	Sahara Package:	adds upgrades for operationgs in ambient temperatures upto 140 °F & sandstorm operations
☐	Two -Phase Package;	adds slug-flow resistant serpentine radiant coil (replaces helical coil)
■	Ultra Low NOx Package;	adds upgrades to support ULTRA Low NOx Burners; NOx < 30 ppmvd typical
☐	Velocity Package;	adds process "pass flow" controls to maintain uniform velocities in all passes
☐	Viscosity Package;	alters design to support high viscosity services (e.g., asphalt & hvy emulsions)
☐	West Coast Package;	upgrades structural design basis from Zone 2 to Zone 4 (per ASCE 7)
☐	Xtra Efficiency Package;	adds an economical air preheat system to boost efficiency
■	Your Specs Package;	alters / upgrades heater design to comply with Your Specifications
☐	Z06 Delivery Package;	alters manufacturing process to provide a "ZO6 fast" manufacturing schedule

LADDERS AND PLATFORMS

Proposal & Design Basis:

1) Construction: 100% Galvanized A36 CS per API Standard 560 / ISO 13705
2) Provisions for External Coating(s) / Painting: None, except as explicitly set forth in THI's proposal
3) Additional L&P's: can be provided per the basis set forth in Sections 8 & 9 of THI's proposal

Component	Qty (- -)	Width (ft)	Length (ft)	Arc (°)	O.D. (ft)	Weight (Lbm)	Price (US$)
Radiant Platforms							
Burner Platform	0	3.00	5.00	0	0.00	0	0
Ladder to Grade	0	3.00	6.00			0	0
Stair to Grade	0	3.00	6.00			0	0
Convection Platforms							
Conv. End Platforms	0	4.00	4.53			0	0
Conv. Side Platforms	0	3.00	21.00			0	0
Ladder to Grade	0	3.00	4.00			0	0
EPA Platform	0	3.00		270	9.50	0	0
Ladder to Grade	0	3.00	6.00			0	0
Intermediate Pltfm	0	3.00		90	9.50	0	0
Totals for Proposed Platforms						0	0

CLARIFICATIONS, FOOTNOTES & REVISIONS

Refractory Systems Abbreviations Key:

1:2:4 LHV = SHOP Mix Castable of 1:2:4 spec; Premix = FACTORY Mix castable; HD FBrick = Heavy Duty FireBrick
CFB = Ceramic Fiber Blanket; CFM = Ceramic Fiber Modules; CFBd = Ceramic Fiber Board; pcf = pounds / ft3

[A] Indicated guaranteed process pressure drop excludes process dP of Inlet and Outlet manifolds

[B] The noted Guaranteed NOx Emissions are for operations from 50% of Design through Maximum Heat Release.
[C] The noted Guaranteed CO, UHC, VOC & SPM10 Emissions are for operations from 1,100 °F BWT through Max. Heat Release. For this emissions warranty, the Bridgewall Temperature (BWT) shall be measured within 2 ft of the burner tile.
[D] During turndown operations, this heater may experience CO "breakthrough". This undesirable phenomena is a byproduct of low NOx burner design / low firebox temperatures that are unable to force the CO oxidation reaction to completion.
[E] Per [C] and [D], Emissions Gaurantees are not applicable to transient operations and/or for any and all operations at/below 50% of Desgin (NOx guarantee) and at/below 1,100 °F BWT (CO, UHC, VOC & SPM10 guarantees).
[F] Above clarifications are extracted from the burner OEM's warranty; refer to same for additioinal constraints and details.

[G] Process flow turndown should be limited to a minimum flow of 28,500 Lb/hr to minimize the risks of "dead-legging" a pass.

GLSF-7 Free-Jet Gas Burner Assembly

FOR

Tulsa Heaters

AT

Markwest

Burner Data Sheets

Rev	By	Date	Description
0	RDR	29-Jun-13	First Issue

ZEECO BURNER DATA SHEETS

Burner Design Criteria

Customer:	**Tulsa Heaters Inc.**
End User:	**Markwest**
Jobsite:	**Sherwood IV Plant, WV**
Heater Tag Number:	**H-4712**
Type of Heater:	**SHO.750 HLX**
Burner Designation:	**GLSF**
Burner Description:	**Round Flame, "Free-Jet"**
Patent Info:	***US Patent # 6,499,990***

Revision Table

Rev #	Issue	Description of Revision		Rev Date	Name
0	2	Revised to Project S.O. 22851		29-Jun-13	Ryan Roberts
A	1	Original Issue.	11-Jun-13	Matt Roush	

Confidential Property of Zeeco. To be returned upon request and used only in reference to contracts or proposal of this company. Reproduction of this print or unauthorized use of this Document is prohibited.

- *Burners*
- *Flares*
- *Incinerators*
- *Combustion Systems*

13809	S.O. 22851
Tulsa Heaters Inc.	H-4712
Markwest	SHO.750 HLX
Sherwood IV Plant, WV	Rev. 0
Round Flame, "Free-Jet"	SHEET 1 OF 5

ZEECO BURNER DATA SHEETS

Rev. | Rev.

GENERAL INFORMATION

Customer Name	Tulsa Heaters Inc.
End User Name	Markwest
Jobsite	Sherwood IV Plant, WV

FURNACE DATA / SITE CONDITIONS

	8712		
Furnace Tag Number	H-4712	Plant Site Elevation Above Sea Level, ft	1000
Type of Furnace	SHO.750 HLX	Ambient Air Temperature (°F)	100
Refractory Thickness, in	6	Minimum Relative Humidity	0%
Heater Steel Thickness, in	0.25	Normal Relative Humidity	50%
Type of Draft	Forced	Maximum Relative Humidity	100%
Direction of Firing	Horizontal	Heater Height (to convective sec.), ft	13.1
Mounting Direction	Horizontal	Tube Circle Diameter (ft)	6.5
		Heater Length, ft	0.0

PROCESS DATA

	Gas		
Maximum Heat Release (MM BTU/hr)	6.600	Available Combustion Air dP (in H2O)	3.066
Normal Heat Release (MM BTU/hr)	5.770	Combustion Air Temperature (°F)	60
Minimum Heat Release (MM BTU/hr)	1.320	Furnace Temperature (°F)	1450
Turndown	5.00	Combustion Test	Not Required
Required Fuel Pressure for Burner (psig)	30		
Design Excess Air	15%		

GENERAL BURNER DESCRIPTION

Burner Model / Size	GLSF	7	Flame Shape	Round Flame
Burner Description	Round Flame, "Free-Jet"		Maximum Predicted Flame Length (ft)	11.0
Number Required		1	Maximum Predicted Flame Width (ft)	3.11
Oil Gun Model / Size			Pilot Model	JM-1S-E
Atomizing Media			Pilot Ignition Method	Electric Ignition
Atomizing Type			Pilot Heat release (Btu/hr)	90,000.00
Available Atomizing Pressure (psig)			Pilot Operating Pressure (psig)	10
Atomizing Media Rate (# / # fuel)			Pilot Fuel	Natural Gas
			Flame / Ionization Rod Provided	None

NOISE DATA (SINGLE BURNER BASIS)

Predicted @ 63 Hz (dB)	85	Predicted @ 2000 Hz (dB)	72
Predicted @ 125 Hz (dB)	89	Predicted @ 4000 Hz (dB)	74
Predicted @ 250 Hz (dB)	82	Predicted @ 8000 Hz (dB)	72
Predicted @ 500 Hz (dB)	86	Guar. Noise Level @ 3 ft from burner, dBa	85
Predicted @ 1000 Hz (dB)	76		

GENERAL BURNER COMMENTS

2-1. The above noise emissions are "Sound Pressure Level".

2-2. The above heat releases are based on the lower heating value 'LHV' of the fuel(s).

2-3. The burners are sized based on the maximum relative humidity case, as listed above.

Confidential Property of Zeeco. To be returned upon request and used only in reference to contracts or proposal of this company. Reproduction of this print or unauthorized use of this Document is prohibited.

ZEECO BURNER DATA SHEETS

FUEL GAS CHARACTERISTICS

Composition	Design % vol	No. 2 Blend % vol							
CH4 (methane)	99.33%	80.22%							
C2H6 (ethane)	0.41%	15.26%							
C3H8 (propane)	0.02%	2.39%							
C4H10 (butane)		0.17%							
C5H12 (pentane)									
C6H14 (hexane)									
C5H10 (cyclopen)									
C6H12 (cyclohex)									
C2H4 (ethene)									
C3H6 (propene)									
C4H8 (butene)									
C5H10 (pentene)									
C6H6 (benzene)									
C5H8 (isoprene)									
CO2	0.02%	0.47%							
H2O	0.07%								
O2									
N2	0.22%	1.49%							
SO2									
H2S	0.00%	0.00%							
CO									
NH3									
H2									
AR									
Total (vol%)	100%	100%							
Excess O2 (vol%)	3.00%	2.99%							
LHV (Btu/scf)	910	1037							
S.G.	0.56	0.67							
TEMP (°F)	70.00	70.00							
M.W.	16.32	19.39							

OFF GAS CHARACTERISTICS

FUEL OIL CHARACTERISTICS

LHV (BTU/lb)
S.G. @ 60°F
TEMP (°F)
API GRAVITY @ 60°F
NITROGEN (wt%)
VANADIUM (PPM)
SULFUR (wt%)
CATALYST PRESENT
GENERAL OIL TYPE

Confidential Property of Zeeco. To be returned upon request and used only in reference to contracts or proposal of this company. Reproduction of this print or unauthorized use of this Document is prohibited.

ZEECO

- *Burners*
- *Flares*
- *Incinerators*
- *Combustion Systems*

13809	S.O. 22851
Tulsa Heaters Inc.	H-4712
Markwest	SHO.750 HLX
Sherwood IV Plant, WV	Rev. 0
Round Flame, "Free-Jet"	SHEET 3 OF 5

ZEECO BURNER DATA SHEETS

BASIS OF EMISSIONS INFORMATION

Rev.

Furnace Temperature (°F)	1,450		
Excess Combustion Air (%)	15% Gas		
Combustion Air Temperature (°F)	60		
Relative Humidity (%)	50%		
Heat Release for Guarantee (MM Btu/hr)	6.600	to	5.770 LHV

EMISSIONS INFORMATION

	PREDICTED		GUARANTEED	
	(ppmv)	(#/MMBtu)	(ppmv)	(#/MMBtu)
NOx Design	13	0.016	33	0.040
NOx No. 2 Blend	13	0.016	33	0.040
CO - Gas	0	0.000	50	0.040
UHC - Gas	1	0.001	15	0.007
Particulate - Gas	2	0.002	15	0.013
VOC - Gas	0	0.000	15	0.019

EMISSIONS COMMENTS

4-1 The above listed UHC emissions are based upon UHC being defined as free "methane" as the result of incomplete combustion due to the supplied combustion equipment as stated in these data sheets.

4-2 The above listed VOC emissions are based upon VOC being defined as free "propane" as the result of incomplete combustion due to the supplied combustion equipment as stated in these data sheets.

4-3 The above listed Particulate emissions are based upon Particulate being defined as free "ethane" as the result of incomplete combustion due to the supplied combustion equipment as stated in these data sheets. This excludes ash, sand and heavy metals in the fuel oil.

4-4 NOx guarantees are based on the furnace temperature, combustion air temperature, excess combustion air and the fuel gas compositions as specified the Zeeco Burner Data Sheets.

4-5 The emissions guarantees above are for operation between maximum and normal heat release.

4-6 The emissions guarantees as stated above are based upon operation with the % excess air, temperature, furnace temperature, and fuel temperatures as stated in these data sheets.

4-7 See Notes & Clarifications section for more information concerning noise emissions.

4-8 See Notes & Clarifications section for more information concerning the above emissions guarantees.

4-9 Zeeco takes exception to any SOx guarantees since SOx production is based upon the amount of Sulfur in the fuel stream and the equilibrium conditions in the furnace.

4-10 The above listed predictions & guarantees are based on the higher heating value 'HHV' of the fuel(s).

4-11 All ppmv and/or mg/Nm3 guarantees are corrected to 3% O2 dry basis.

4-12 All CO, UHC, Particulate and VOC emissions guarantees are based on the furnace local temperature at the burner being above 1100°F (593°C).

Confidential Property of Zeeco. To be returned upon request and used only in reference to contracts or proposal of this company. Reproduction of this print or unauthorized use of this Document is prohibited.

ZEECO BURNER DATA SHEETS

BASIS OF SCOPE OF SUPPLY

		Rev.
Burner Plenum	Burners are supplied with individual, manufactured plenums (windboxes).	
Plenum General Description	Integral, round-shaped air plenum, fabricated construction	
Material	A-1011 Gr 30 Carbon Steel	
Thickness	10 gauge (3.58 mm) material	
Internal Insulation / thickness	Mineral Wool 0.00 (in)	
Method of Construction	Seal-Welded Construction	
Inlet Air Control	Burners are NOT supplied with air control.	
Mode of Operation	Not Applicable	
Tight Shutoff for Damper Blades	Not Applicable	
Mechanism Description	Not Applicable	
Bearing construction	None	
Burner Tile	Burner is supplied with a refractory tile assembly.	
Regen Tile Composition	Not Applicable	
Secondary Tile Composition	60% Al2O3	
Needle Construction Required	Not Required	
Rated Service Temperature (°F)	3000	
Temperature of Pre-firing (°F)	500	
Noise Attenuation Method	Not Required	
Fuel Delivery System	Burners are supplied with a gas tip and manifold assembly, with a single point connection	
Gas manifold description	Manufactured pipe manifold, constructed from schedule 40 carbon steel pipe	
Gas Tip Material	310 or HK (ASTM A-297) stainless steel	
Gas Riser Material	1/4" (6.35 mm), schedule 40, 304 stainless steel pipe	
Separate Off Gas Manifold	Not Required	
Off Gas Tip Material	Not Required	
Off Gas Riser Material	Not Required	
Pilot Material	Carbon Steel and / or Cast Equivalent - 310 SS or Cast equivalent tip	
Fuel Gas / Off Gas / Pilot Gas Connections	150#, Carbon Steel Flange, RFWN, A-105	
Oil Tip / Atomizer Material	Not Applicable	
Oil & Steam Connections	Not Applicable	
Painting Requirements	Zeeco Standard	
Carbon Steel Surface Preparation	SSPC-SP-6 // NACE 3 // SA 2 - Commercial Blast	
Primer	Dimetcote 9, Inorganic Zinc Primer	
Primer Thickness	3-4 mils dft	
1st Paint Coat	PITT-THERM 97-724 Series Air Dry	
1st Paint Coat Thk.	1.5-2.0 mils dft	
Top Coat	Not Required	
Top Coat Thickness	Not Required	
Tile Case Assembly / Mounting Plate	Burners are supplied with a tile case assembly	
Mounting Template - heater floor cutout	Not Required	
Lifting Lugs	Not Required	
Pressure Taps Required for Windbox	1/2" NPT coupling c/w plug, one (1) per burner	
Scanner Connection	1" NPT fixed connection, one (1) per burner	
Ignition / Sight Ports	Two (2) ports provided, 2" (50.8 mm), c/w threaded cap & glass	
Electrical Information	Pilot Fittings and Ship Loose Items	
Pilot Conduit Fittings	Safe Area	
UV Scanners	By Others	

Confidential Property of Zeeco. To be returned upon request and used only in reference to contracts or proposal of this company. Reproduction of this print or unauthorized use of this Document is prohibited.

UOP
A Honeywell Company

Callidus LLC
Honeywell
7130 South Lewis Avenue
Suite 335
Tulsa, OK 74136

Main Line: 918-496-7599

September 25, 2014

Exterran

RE: Your Reference – US-107216 – FS-4761 Flare
Callidus File No. F-1306-180155-TL Rev.7

Attention: Demetris Venizelos, Ph.D.
Email: Demetris.Venizelos@Exterran.com

Ladies and Gentlemen:

For more than 35 years the Callidus team has participated in and have been responsible for design, start-up and maintenance of numerous flare systems. Of particular importance to your project is the team's experience with integrated flare systems, specifically, development and start-up of hundreds of flare applications.

Callidus sincerely appreciates the opportunity to present the following proposal and we appreciate the time and effort you will invest to review and evaluate our offering. When appropriate, Callidus prefers to visit your facility in order to more completely present the technical advantages and unique features of our technology. Our presentation will also include a review of Callidus' approach to your particular application, further outline of personnel background and experience and answers to any questions you may have.

Not only are the unique qualifications of the Callidus team well matched to your project, but also the entire Callidus staff is totally committed to providing technically competent and timely completion of any work committed to us. Should questions arise for which immediate answers are required, please feel free to contact us at our Tulsa offices or our local representative, Files and Associates at 918-970-6447.

With these comments in mind, we are pleased to offer the attached proposal.

Best Regards,

Ryan Pilkington
Technology Manager
Callidus Technologies, LLC
UOP, A Honeywell Company
7130 South Lewis Avenue
Suite 335
Tulsa, OK 74136-5488
Main Phone: 918-496-7599
Direct Phone: 918-523-2159
Cell Phone: 918-607-8528
Fax: 918-496-7587
Email: Ryan.Pilkington@Honeywell.com

TABLE OF CONTENTS

A. Process Specifications

B. Engineering Assessment

C. Scope of Equipment Supply

D. Utilities

E. Technical Data

F. Standards for Proposed Equipment

A. PROCESS SPECIFICATIONS

Case I Maximum Flow	Maximum Design	Smokeless Design
Flowrate (lb/hr)	891,072	200,000
Available Pressure (psig)	25	25
Molecular Weight	44	44
Lower Heating Value (btu/scf)	2309	2309
Temperature (°F)	138	138

Case II Alt. Max Flow	Maximum Design	Smokeless Design
Flowrate (lb/hr)	784,090	200,000
Available Pressure (psig)	25	25
Molecular Weight	30	30
Lower Heating Value (btu/scf)	1608.5	1608.5
Temperature (°F)	-57	-57

Case III Frac. DeEth blocked flow	Maximum Design	Smokeless Design
Flowrate (lb/hr)	603,146	200,000
Available Pressure (psig)	25	25
Molecular Weight	30	30
Lower Heating Value (btu/scf)	1608.5	1608.5
Temperature (°F)	-57	-57

Case IV Frac. Refr. Comp. blocked flow	Maximum Design	Smokeless Design
Flowrate (lb/hr)	685,440	200,000
Available Pressure (psig)	25	25
Molecular Weight	44	44
Lower Heating Value (btu/scf)	2309	2309
Temperature (°F)	138	138

Case V Frac. Refl. Accum.	Maximum Design	Smokeless Design
Flowrate (lb/hr)	103,500	103,500
Available Pressure (psig)	25	25
Molecular Weight	29.8	29.8
Lower Heating Value (btu/scf)	1597	1597
Temperature (°F)	-42	-42

Case VI Cryo Surge Tank (Fire)	Maximum Design	Smokeless Design
Flowrate (lb/hr)	175,986	175,986
Available Pressure (psig)	25	25
Molecular Weight	51.5	51.5
Lower Heating Value (btu/scf)	2669.6	2669.6
Temperature (°F)	115	115

Case VII Refr. System (Fire)	Maximum Design	Smokeless Design
Flowrate (lb/hr)	155,349	155,349
Available Pressure (psig)	25	25
Molecular Weight	44.2	44.2
Lower Heating Value (btu/scf)	2321.6	2321.6
Temperature (°F)	170	170

Case VIII Cryo Refr. Comp. (Blocked Flow)	Maximum Design	Smokeless Design
Flowrate (lb/hr)	117,990	117,990
Available Pressure (psig)	25	25
Molecular Weight	44.2	44.2
Lower Heating Value (btu/scf)	2321.6	2321.6
Temperature (°F)	180	180

Smokeless Rates are smokeless to Ringlemann 0

B. ENGINEERING ASSESSMENT

Air-assisted Engineering Assessment

The key to successful smokeless burning of waste material using an air-assist is to properly design the burner system and integrate that system with a properly selected blower. Of particular importance in an air-assisted flare is obtaining a high enough mechanical kinetic energy level in the combustion zone to promote mixing. This level can be approximated by using the summation of the velocity to differential pressure of the fluids in the combustion zone. This value of the summation of the velocity to differential pressure must reach some constant level for a given waste composition, burner design, environmental conditions, and other variables in order to provide smokeless operation.

The normal mode of smoke production in an air-assisted flare is the development of large persistent vortex structures in the flame. These structures roll on themselves and internally produce reducing conditions, which result in smoke. The propensity to produce these structures is greatly effected by the wind.

Of particular importance in this list of variable is the design of the burner and its ability to provide mixing. The burner design must be executed to provide air flow and gas flow in proportion to each other; that is, there must be more gas flow near the outside of the circular air riser than towards the inside because the bulk of the air flow area in a circular plenum is contained on the outside of the plenum. In addition, the burner design must provide for stability of the waste gas under greatly varying flow conditions and compositions. This design is most easily achieved by using a spider-type burner whose center hub acts a stability point for the burner insuring stable combustion through a wide range of compositions and turndowns.

Pilots for the Callidus flares are the result of intensive testing to improve pilot operation in several aspects.

- Wind stability. All Callidus pilots are equipped with windshields over the mixers, in addition to the wind stability designed in with the matched mixer/tip combination - both are investment cast for quality control and longevity.

- Longevity. The pilot gas tip, flame shield and thermocouple mounting well, are all investment castings of CK-20 material. CK-20 is a casting version of 310SS. The castings metallurgy, the lack of forming stresses, and the metal thickness combine to make a long-lived pilot.

- Thermocouple life. Callidus testing has selected a thermocouple placement to maximize response in all weather conditions, as well as minimize the exposure to direct flame. The cast thermowell is designed to assure consistent thermocouple placement.

C. SCOPE OF EQUIPMENT SUPPLY

C.1 Air Assisted Flare Tip

One (1) Callidus AA-48 Spider air-assisted flare burner/plenum assembly 10 feet overall length with the entirety of the process internals of 310 SS. The upper 5 feet of the outer air plenum is 310 S.S. and the lower 5 feet is A36 Carbon Steel. The flare has the following features:

- Four (4) high-stability flare pilots mounted on free-floating brackets to prevent damage due to thermal expansion
- One (1) Concentric Fabricated Spider gas burner
- Specially designed air plenum to distribute the high velocity air from the blower into the combustion zone for smokeless flaring
- Pilot mixers mechanically designed to support expected piping load
- Plenum is connected with a 304 SS RF flange inlet connection to the stack. The process internals are welded to the internal process riser
- Plug-welded brackets to avoid stress cracking
- Pilot flame shield, gas tip and thermowell for the thermocouple are investment cast of CK-20
- Two (2) Retractable Simplex type "K" chromel-alumel thermocouple protected with a 310SS sheath and terminated in a conduit weatherhead per pilot for trouble-free and weatherproof connections

C.2 Self Supported Flare Stack

One (1) Self supported flare stack to achieve 195 feet overall height. The following items are included as integral parts of the flare system:

- One (1) 54 inch outer air plenum of A-36 carbon steel construction
- One (1) 20 inch inner process riser of 304SS construction
- Caged ladders and platforms to meet OSHA requirements
- One (1) lot of 304 SS pilot gas and ignition piping
- One (1) 20 inch 150 lb. raised face 304SS flanged inlet at approximate elevation 10 feet

C.3 Air-Assist Blower and Motor

One (1) each 100 hp. vane-axial blower to supply air to the flare tip for suppression of smoke. The blower is a vane-axial design, arrangement 4, with internal direct drive motor, TEAO design. The motor drive shaft connects directly to the fan blade to limit the moving parts and reduce the maintenance requirements. The blades on the vane-axial fan are manually adjustable in the field to ensure the correct setting for smoke control in the field after start-up. The fan will be a Chicago Blower company design or equal. Included is an inlet bell for uniform flow into the fan and an inlet bird screen. This blower has been proven in service on over 200 air-assisted flare systems with horsepower up to 350. An access door is supplied for inspection of the blower and motor.

*VFD has not been included

C.4 Piggy-Back Flare Tip

One (1) PF-30 flare burner 10'-0" overall length with the upper 5'-0" constructed of 310SS and the lower 5'-0" constructed of 304SS. The flare has the following features:

- Two (2) high-stability flare pilots mounted on free-floating brackets to prevent damage due to thermal expansion
- Pilot mixers mechanically designed to support expected piping load
- 304SS plate flange inlet connection to the stack
- Plug welded brackets to avoid stress cracking
- Pilot flame shield, gas tip and thermowell for the thermocouple are investment cast of CK-20.
- Type "K" chromel-alumel thermocouples protected with a 310SS sheath and terminated in a conduit weatherhead for trouble-free and weatherproof connections (one per pilot)
- Internally mounted velocity seal

C.5 Velocity Seal

The VS-24 purge reduction seal is designed to dramatically reduce the purge required to prevent air ingression into the flare system. At low gas flow rates, air will enter the flare tip through the top and tends to travel down the inside wall of the tip. The cone-shaped design of the VS seal breaks the flow of air into the system by disrupting the flow attachment of air to the wall of the flare tip and creating a velocity differential barrier in the purge gas. The quoted purge

quantities will ensure 6 to 8% oxygen below the seal. The VS seal offers the following features:

- No passages to plug
- No drain required, ensuring trouble-free operation
- Safe, simple operation
- Low operating cost
- 304 stainless steel construction

The recommended purge volume for the velocity seal quoted is 434 SCFH.

C.6 Piggy-Back Flare Stack

One (1) Piggy-Back flare stack to achieve 195 feet overall height. This flare stack is supported by the Air Assisted Flare. The following items are included as integral parts of the flare system:

- 304SS construction of gas riser
- One (1) lot of carbon steel pilot gas piping
- One (1) lot conduit for thermocouple wire
- 20 inch 150 lb. raised face 304SS flanged inlet at approx. elevation 10 feet

C.7 Automatic Electronic Spark Ignited Pilot Control Panel

The proposed system utilizes electronic spark ignition for the automatic relight function. The spark ignition is a tried and proven technique. The spark is provided by the same type of equipment as is used in gas turbine ignition or aircraft engine ignition systems.

When the thermocouple senses a pilot outage, the spark ignitor immediately reacts to relight. After a set period of time (field adjustable) the pilot goes to alarm.

- Pilot status is registered by programmable logic controller constantly monitoring the pilot thermocouples and IR flame scanner
- Loss of pilot indicating lights
- One (1) manual ignition pushbutton

- One (1) pilot fuel gas metering system consisting of a pressure regulator, strainer, needle valve, solenoid valve, pressure gauge
- One (1) NEMA 4X Z-purge control panel for Class 1, Div II, Group D hazardous area
- One (1) NEMA 4X thermocouple junction box to be mounted at the base of the flare stack
- All components are shop mounted on a back plate with legs
- 4-foot electronic ignition probe for each pilot, with stainless flexible conduit and high temperature ignition cable connections
- Locally mounted ignition excitor box (NEMA-7). This will be mounted at the flare base. Control wiring from the panel will go through this box.

D. UTILITIES

D.1 PILOTS: 85,000 Btu/hr of fuel gas @ 30 psig for each pilot (continuous)

D.2 ELECTRICAL: 120 volt, 60 cycle, 1 phase for spark ignitor and the ignition transformer

D.3 PURGE: Purge gas can be any gas that does not go to dew point at purge conditions and does not contain oxygen.

E. OTHER TECHNICAL DATA

E.1 Radiation Information

Radiation levels are shown on the attached plots of radiation at grade versus distance from the base of the flare stack. In addition, the following shows the radiation levels at the specific points of interest specified in the inquiry document. All radiation levels are specified in btu/hr-ft2 units and are +/- 100 btu/hr-ft2. Solar radiation is included in these values.

F. STANDARDS FOR PROPOSED EQUIPMENT

Unless otherwise specified in this proposal, the following standards will apply to the proposed equipment.

1. **WELDING:** Per AWS Standards

2. **STEEL FABRICATION:** Per AISC/AWS Standards

3. **DESIGN WIND LOADS AND SEISMIC LOADS:** Per ANSI/ASCE 7-02

4. **STRUCTURAL DESIGN:** Per AISC Standards

5. **LADDERS AND PLATFORMS:** Spacing and layout per OSHA Standards. Fabrication details per Callidus Standards. Floors for platforms are open metal grating.

6. **PRESSURE PIPING MATERIAL:** Piping materials will be in accordance with ANSI B31.3 standard. No radiography or pressure testing is included. Field assembled piping two (2) inches NB and smaller will be shipped as random joints of A106B or A53B pipe. Piping larger than two (2) inches will be shop pre-fabricated in shippable lengths with welded joints. Compressed air piping is threaded galvanized carbon steel. Pressure piping smaller than two (2) inches is socket welded. Piping two (2) inches and larger is butt-welded.

7. **CONTROL PANEL**: Designed and fabricated in accordance with NFPA 70, 1996 NEC with piping of A-106-B with NPT fittings. Carbon steel piping has SP-2 surface preparation with a two-part epoxy coating system. Stainless piping (if applicable) is unpainted. Backplate and legs (if applicable) are hot dip galvanized. Enclosures have manufacturers standard paint (explosion proof or stainless steel type are not painted).

8. **MATERIAL:** Carbon steel is A-36 or equal. Callidus has certain priority equipment made from materials that are stocked at our manufacturing facility. These materials have been proven to be very satisfactory in the manufacture and operation for Callidus Priority Equipment: Flare Tips, Pilots, Density Seals, Velocity Seals and Control Racks/Panels. Since this equipment is priority to Callidus Technologies it is exempt from the AML's. Country of origin is based on location of last transformation.

9. **PAINT:** High heat aluminum on carbon steel portion of tip. SP-6 sandblast with one shop coat of inorganic zinc primer on carbon steel portions of stack and structural steel. Ladders and platforms are hot dip galvanized. Steam piping to be insulated and utility piping is not painted. Instrumentation and valves are supplied with the manufacturer's standard component coating. Paint must be accepted at the FOB point. Callidus cannot warrant against failure of finish or intermediate paint applied in shop.

10. **CASTINGS:** Callidus has successfully supplied more than 10,000 castings from our suppliers in China without a single failure. We reserve the right to provide castings from this supplier at any time.

11. ESCALATION: Prices are firm through delivery and not subject to adjustment or escalation with the following clarification. Seller reserves the right to adjust prices for Materials in this Purchase Order at any time prior to the date Materials are received at Seller's or sub-supplier's locations, in the event of a price fluctuation greater than three (3%) percent. Seller will provide reasonable supporting documentation as justification for such surcharge.

12. INSPECTION AND TESTING: Inspection and testing will be per AISC/AWS standards unless otherwise noted. The following items are not provided unless specified in this proposal:

A. Radiograph

B. Hydrostatic test

C. Material certificates

D. Other testing

13. DELIVERABLES:

A. The following customer deliverables are included in pricing (one revision to drawings is included at no charge unless the revision includes scope changes; subsequent drawing revision will result in a cost adder):

1. General arrangement drawings including:

* Individual mark numbers for each item shipped
* Sufficient details for assembly
* Nozzle legends
* Materials of construction

2. Shipping list

3. Operation manual

B. Where applicable on systems:

1. P&ID

2. PFD

3. Panel drawings

4. Electrical one-line drawings

5. Instrument and major equipment specification sheets

C. The following deliverables are not included:

1. Calculations
2. Shop details/fabrication drawings
3. Wire and conduit schedules
4. Specifications
5. Foundation design

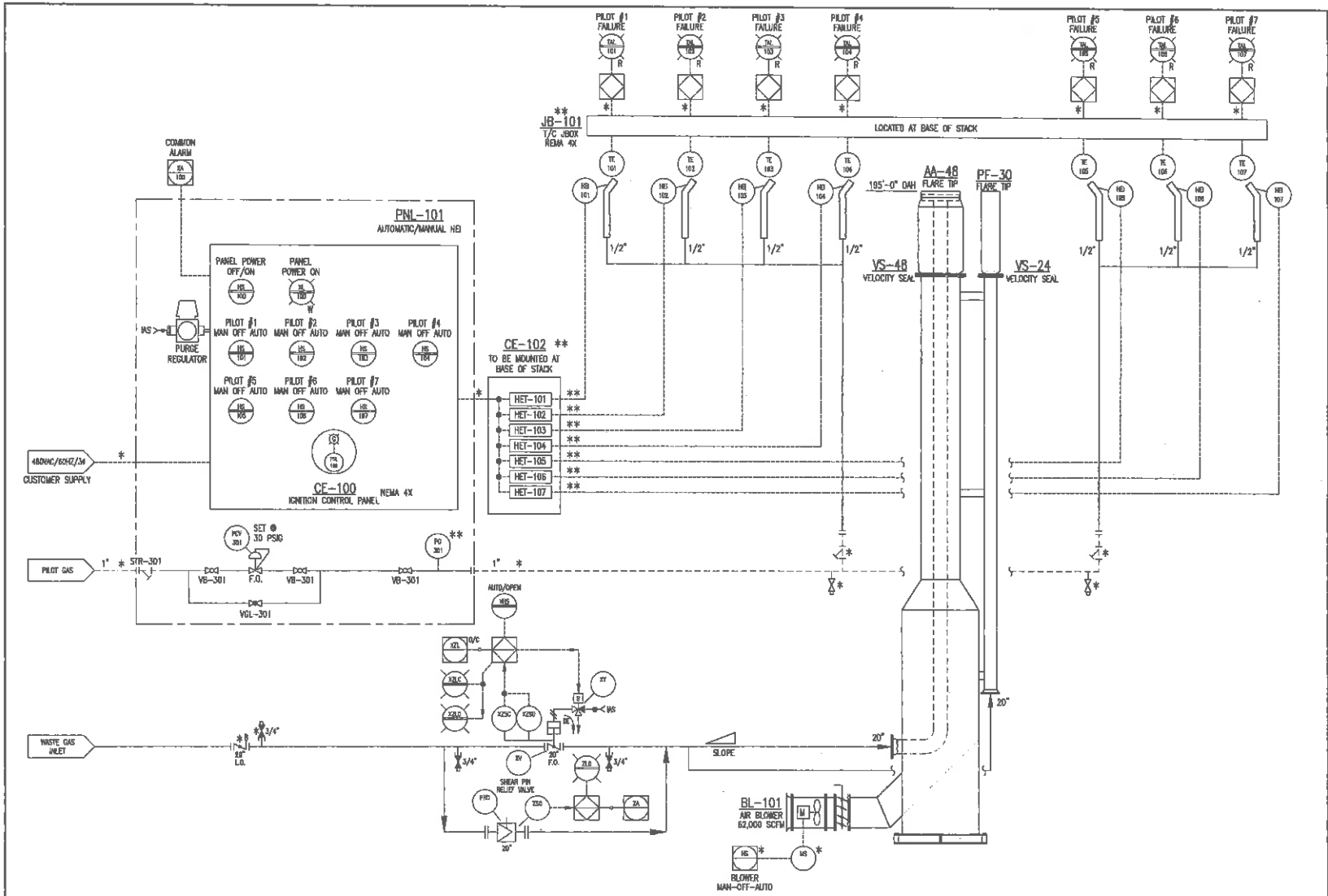

NOTES:

1. THERMOCOUPLES FOR PILOT FLAME DETECTOR SHALL BE SIMPLEX TYPE AND BE WIRED TO JB-101.
2. AREA CLASSIFICATION: CLASS 1, DIV. 2, GROUP C.
3. WIRE AND CONDUIT BETWEEN CALLIDUS SUPPLIED CONTROL PANEL AND CUSTOMERS DCS IS BY OTHERS. (NOT CALLIDUS SCOPE OF SUPPLY.)
4. USE HIGH TEMP. 600V #12AWG POWER WIRE SUITABLE FOR 400°C CONTINUOUS TEMPERATURE FROM FLARE TIP TO STACK BASE
5. USE HIGH TEMP. THERMOCOUPLE SINGLE PAIR UNSHIELDED WIRE SUITABLE FOR 400°C CONTINUOUS TEMPERATURE FROM FLARE TIP TO STACK BASE.

LEGEND:

- ELECTRICAL
- PIPING BY CALLIDUS
- PIPING BY OTHERS
- LOCAL OR FIELD MOUNTED CONTROL DEVICE
- INSTRUMENT MOUNTED ON LOCAL CONTROL PANEL
- CUSTOMER'S CONTROL ROOM (CUSTOMER DCS)
- COMPLEX LOGIC DEVICE (PLC INPUT OR OUTPUT)
- * SUPPLIED BY OTHERS (NOT CALLIDUS SCOPE OF SUPPLY)
- ** SHIPPED LOOSE

THE INFORMATION IN THIS DOCUMENT IS CONFIDENTIAL AND THE PROPERTY OF CALLIDUS TECHNOLOGIES LLC AND MUST NOT BE DISCLOSED TO OTHERS OR REPRODUCED IN ANY MANNER OR USED FOR ANY PURPOSE WHATSOEVER WITHOUT ITS WRITTEN PERMISSION.

DWG. NO.	REFERENCE DRAWING	NO.	REVISION	DR.	CHD.	APPR.

CUSTOMER	EXTERRAN / MARKWEST
P.O.	
USER	
JOB SITE	WEST UNION, WV

DR. / CK. / APPR.
DATE: / DATE: / DATE:

UOP
A Honeywell Company

Callidus Technologies LLC
UOP, A Honeywell Company
7130 South Lewis Ave. Suite 325
Tulsa, OK 74136-5480

PIPING AND INSTRUMENT DIAGRAM
AUTOMATIC/MANUAL HEI

CERTIFIED: | PROCESS BY | PROCESS REVIEW
SCALE: NONE
DWG. NO.: DF-1306-180155-107
REV. 0

NOZZLE LEGEND

MK	QTY	DESCRIPTION
N1	1	14" AIR FLARE WASTE GAS INLET
N2	1	20" PIGGY-BACK WASTE GAS INLET
N3	1	48" BLOWER MOUNTING
N5	1	54" STACK/PLENUM MOUNTING
N6	1	30" STACK/TIP MOUNTING
N7	1	AIR FLARE PILOT GAS CONNECTION AT STACK BASE ~ 1" – PLAIN END S/80 (A105)
N8	1	
N9	1	PIGGY-BACK FLARE PILOT GAS CONNECTION AT STACK BASE ~ 1" – PLAIN END S/80 (A105)
C1	1	HEI IGNITOR CONDUIT CONNECTION AT STACK BASE ~ 1" F.N.P.T.
C2	1	THERMOCOUPLE CONDUIT CONNECTION AT STACK BASE ~ 1" M.N.P.T.
C3	1	AIR FLARE DRAIN ~ 2" F.N.P.T. HALF CPLG. W/ PLUG (FLUSH INSIDE)
C5	1	PIGGY-BACK FLARE DRAIN ~ 2" F.N.P.T. HALF CPLG. W/ PLUG (FLUSH INSIDE)

PARTS LIST

MK	QTY	DESCRIPTION	TAG
1	1	AIR FLARE STACK BASE SECTION	
2	1	AIR FLARE STACK SECTION #2	
3	1	AIR FLARE STACK SECTION #3	
4	1	AIR FLARE STACK SECTION #4	
5	1	PIGGY-BACK FLARE STACK BASE SECTION	
6	1	PIGGY-BACK FLARE STACK SECTION #2	
7	1	PIGGY-BACK FLARE STACK SECTION #3	
8	1	PIGGY-BACK FLARE STACK SECTION #4	
11	1	AA-48 AIR PLENUM ASSEMBLY	
12	1	PF-30 FLARE TIP ASSEMBLY	
18	1	AIR FLARE UTILITY PIPING AND CONDUIT	
19	1	AA-48 GAS TIP DETAILS	
21	1	TRANSFORMERS HEI W/BACKPLATE FOR 6 PILOTS	
22	1	HEI CONTROL RACK ASSEMBLY	
23	1	PIGGY-BACK FLARE UTILITY PIPING AND CONDUIT	

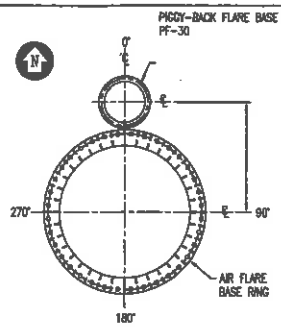

STACK FOOTPRINT
(TRUE ORIENTATION)

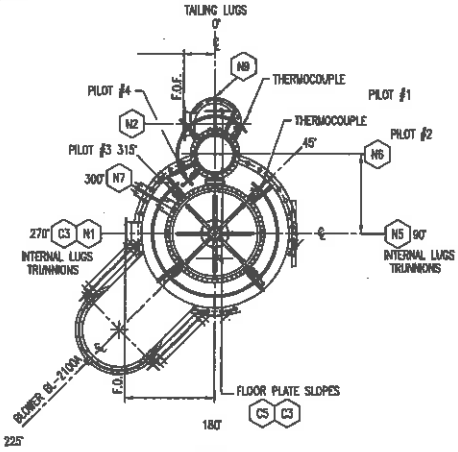

PLAN
(TRUE ORIENTATION)

GENERAL NOTES:

1. FLANGE BOLTING TO STRADDLE CENTERLINES INDICATED BY CL.
2. DUE TO TOLERANCES IN SETTING EQUIPMENT, FINAL FIELD CONNECTION DIMENSIONS SHOULD BE VERIFIED. BACK CHARGES RESULTING FROM FAILURE TO VERIFY FIELD CONNECTIONS WILL NOT BE HONORED.
3. FIELD CONNECTION DIMENSIONS WILL BE HELD WITHIN PLUS OR MINUS ONE INCH 1". ALL OTHER DIMENSIONS ARE FOR REFERENCE ONLY AND MAY VARY FOR EASE OF DESIGN AND/OR MANUFACTURING.
4. TAG NUMBERS TO BE PRECEDED BY JOB No.
5. FABRICATION TOLERANCES PER ASME STS-1-2000
6. ALL BUTTWELDS TO BE FULL PENETRATION TYPE.
7. FILLET WELDS TO BE 3/16" MIN. AND SEAL WELDS, UNLESS NOTED OTHERWISE.
8. MTR'S OR CERTIFICATIONS REQUIRED FOR MATERIALS (INFORMATION ONLY)
9. FABRICATOR TO SHOW ORIENTATION MARKS ON INNER AND OUTER STACK SECTIONS ON MAIN FLARE. SAME FOR SMALLER FLARE. NEED AT TOP AND BOTTOM OF EACH PIECE.

DESIGN CONDITIONS:

STACK DESIGN: AISC 13TH ED.
WIND LOADING: ASCE 7-05
100 MPH
EXP. C, I = 1.15
METAL TEMPERATURES:
105° F MAX
-20° F MIN
CORROSION ALLOWANCE:
GAS SIDE = 0.0"
AIR RISER = 0.0"
SD_s=0.133, SD_1=0.058, and I=1.25
SEISMIC DOES NOT CONTROL THE DESIGN.

FOUNDATION LOADS:

DEAD LOAD = xx KIPS
WIND SHEAR = xx KIPS
WIND MOMENT = xxx KIP-FT

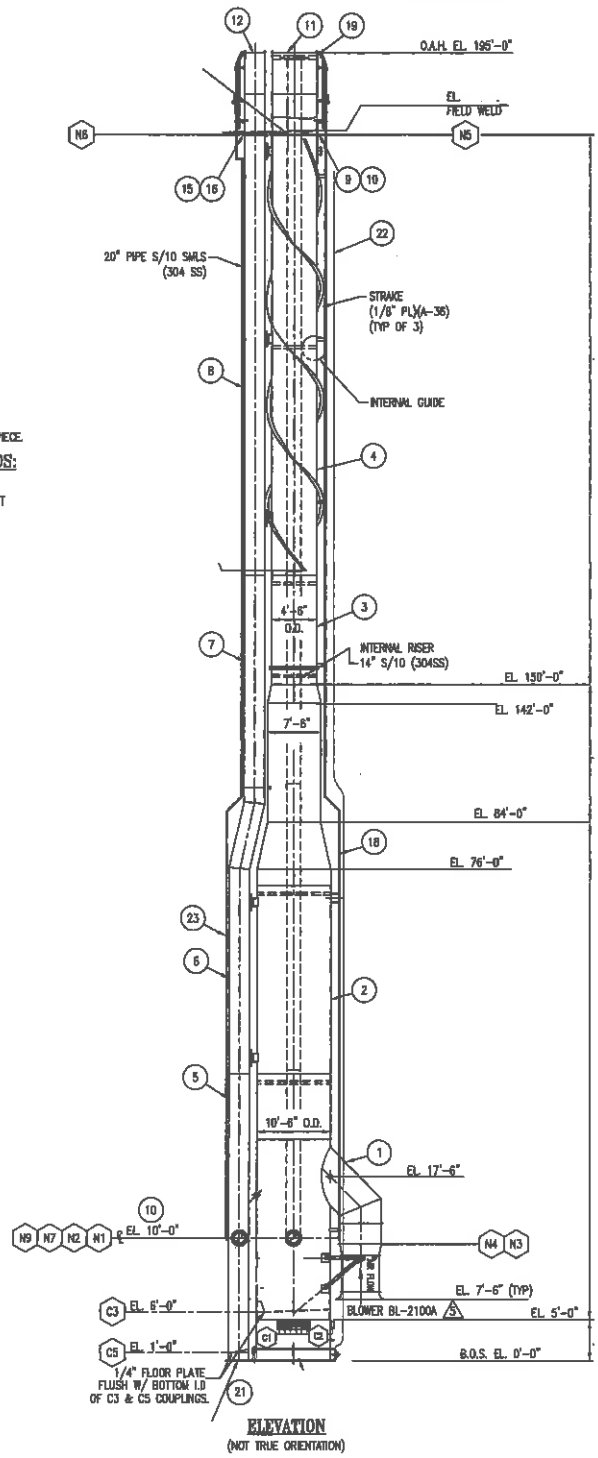

ELEVATION
(NOT TRUE ORIENTATION)

REV.	DATE	DRAWN BY	CHECKED BY	APPROVED BY	REVISIONS

DWG. NO.	REFERENCE DRAWING	NO.	REVISION	DR.	CHK.	APPR.
	FLARE STACK MISC. DETAILS					

THIS INFORMATION ON THIS DRAWING IS THE PROPERTY OF CALLIDUS TECHNOLOGIES BY HONEYWELL UNAUTHORIZED USE IS FORBIDDEN.

CALLIDUS TECHNOLOGIES by Honeywell

GENERAL ARRANGEMENT
FLARE STACK E-1306-180155

EXTERRAN

JOB SIZE: P.O.
USER: MARK WEST

CUS. WEST UNION, WEST VIRGINIA

SCALE: NONE
DWG. NO. DF-180155-201
REV. 0