February 22, 2017 Reference No. 082715

Ms. Beverly McKeone
Division of Air Quality
WV Department of Environmental Protection
601 57th Street, SE
Charleston, West Virginia 25304

Dear Ms. Beverly McKeone:

Re: General Permit Registration G70-D Modification Application
John Campbell North Well Pad
Antero Resources Corporation

GHD Services Inc. (GHD) would like to submit this G70-D General Permit Modification that we prepared on behalf of Antero Resources Corporation for an oil and gas facility identified as John Campbell North Well Pad. John Campbell North Well Pad was originally permitted under R13-3118A.

A General Permit Registration Modification is requested due to the following planned operational changes:

1. Decrease in production
2. Addition of one 1 MMBtu/hr GPU heater
3. Removal of one Kubota Engine
4. Removal of one well
5. Removal of two 1.5 MMBtu/hr GPU heaters
6. Removal of two condensate tanks

Please refer to Table 13 in Attachment S - Emissions Calculations for the summary of changes in emissions of regulated air pollutants that will result from the above operational changes.

Enclosed are the following documents:

- Original copy of the G70-D General Permit Modification Application.
- Two CD copies of the G70-D General Permit Modification Application.
- The application fee with check no. 468470 in the amount of $1,500.00.

Please let us know if you have any questions or require additional information.

Sincerely,

GHD Services Inc.

Manuel Bautista

MB/ma/296
Encl.
cc: Barry Schatz, Antero Resources Corporation
Elizabeth McLaughlin, Antero Resources Corporation

GHD
6320 Rothway Street Suite 100 Houston Texas 77040 USA
T 713 734 3090 **F** 713 734 3391 **W** www.ghd.com

General Permit G70-D Modification Application

Decreased production and addition of one 1 MMBtu/hr GPU Heater; Removal of Kubota Engine, one well, two 1.5 MMBtu/hr GPU Heaters, and two condensate tanks

John Campbell North Well Pad

Antero Resources Corporation

GHD | 6320 Rothway Suite 100 Houston Texas 77040
082715 | Report No 296 | February 2017

Table of Contents

G70-D General Permit Modification Application

Attachment A	Single Source Determination Form
Attachment B	Siting Criteria Waiver – Not Applicable
Attachment C	Current Business Certificate
Attachment D	Process Flow Diagram
Attachment E	Process Description
Attachment F	Plot Plan
Attachment G	Area Map
Attachment H	G70-D Section Applicability Form
Attachment I	Emission Units/ERD Table
Attachment J	Fugitive Emissions Summary Sheet
Attachment K	Gas Well Affected Facility Data Sheet
Attachment L	Storage Vessels Data Sheet
Attachment M	Natural Gas Fired Fuel Burning Units Data Sheet
Attachment N	Internal Combustion Engine Data Sheet – Not Applicable
Attachment O	Tanker Truck Loading Data Sheet
Attachment P	Glycol Dehydration Unit Sheet(s) – Not Applicable
Attachment Q	Pneumatic Controllers Data Sheet – Not Applicable
Attachment R	Pneumatic Pump Data Sheet – Not Applicable
Attachment S	Air Pollution Control Device/ Emissions Reduction Devices Sheets
Attachment T	Emission Calculations
Attachment U	Facility-wide Emissions Summary Sheets
Attachment V	Class I Legal Advertisement

west virginia department of environmental protection

Division of Air Quality
601 57th Street SE
Charleston, WV 25304
Phone (304) 926-0475
Fax (304) 926-0479
www.dep.wv.gov

G70-D GENERAL PERMIT REGISTRATION APPLICATION

PREVENTION AND CONTROL OF AIR POLLUTION IN REGARD TO THE CONSTRUCTION, MODIFICATION, RELOCATION, ADMINISTRATIVE UPDATE AND OPERATION OF NATURAL GAS PRODUCTION FACILITIES LOCATED AT THE WELL SITE

☐CONSTRUCTION
☒MODIFICATION
☐RELOCATION
☐CLASS I ADMINISTRATIVE UPDATE
☐CLASS II ADMINISTRATIVE UPDATE

SECTION 1. GENERAL INFORMATION

Name of Applicant (as registered with the WV Secretary of State's Office): Antero Resources Corporation

Federal Employer ID No. (FEIN): 80-0162034

Applicant's Mailing Address: 1615 Wynkoop Street

City: Denver	State: CO	ZIP Code: 80202

Facility Name: John Campbell North Well Pad

Operating Site Physical Address: 760 Church St

City: Pullman	Zip Code: 26421	County: Ritchie

Latitude & Longitude Coordinates (NAD83, Decimal Degrees to 5 digits):
Latitude: 39.18087
Longitude: -80.93011

SIC Code: 1311 NAICS Code: 211111	DAQ Facility ID No. (For existing facilities) 085-00026

CERTIFICATION OF INFORMATION

This G70-D General Permit Registration Application shall be signed below by a Responsible Official. A Responsible Official is a President, Vice President, Secretary, Treasurer, General Partner, General Manager, a member of the Board of Directors, or Owner, depending on business structure. A business may certify an Authorized Representative who shall have authority to bind the Corporation, Partnership, Limited Liability Company, Association, Joint Venture or Sole Proprietorship. Required records of daily throughput, hours of operation and maintenance, general correspondence, compliance certifications and all required notifications must be signed by a Responsible Official or an Authorized Representative. If a business wishes to certify an Authorized Representative, the official agreement below shall be checked off and the appropriate names and signatures entered. **Any administratively incomplete or improperly signed or unsigned G70-D Registration Application will be returned to the applicant. Furthermore, if the G70-D forms are not utilized, the application will be returned to the applicant. No substitution of forms is allowed.**

I hereby certify that Barry Schatz is an Authorized Representative and in that capacity shall represent the interest of the business (e.g., Corporation, Partnership, Limited Liability Company, Association Joint Venture or Sole Proprietorship) and may obligate and legally bind the business. If the business changes its Authorized Representative, a Responsible Official shall notify the Director of the Division of Air Quality immediately.

I hereby certify that all information contained in this G70-D General Permit Registration Application and any supporting documents appended hereto is, to the best of my knowledge, true, accurate and complete, and that all reasonable efforts have been made to provide the most comprehensive information possible.

Responsible Official Signature:_____
Name and Title: Phone: Fax:
Email: Date:

If applicable:
Authorized Representative Signature: Barry Schatz
Name and Title: Barry Schatz/ Senior Environmental & Regulatory Manager Phone: 303-357-7276 Fax: 303-357-7315
Email: bschatz@anteroresources.com Date: 1/26/2017

If applicable:
Environmental Contact
Name and Title: Phone: Fax:
Email: Date:

OPERATING SITE INFORMATION	
Briefly describe the proposed new operation and/or any change(s) to the facility: Decreased production and addition of one 1 MMBtu/hr GPU Heater; Removal of Kubota Engine, one well, two 1.5 MMBtu/hr GPU Heaters, and two condensate tanks	
Directions to the facility: From Clarksburg, head west on US-50 W toward Co Rd 5035 for 34.5 miles. Take a left onto WV-74 S for 7.4 miles. Turn right onto Main St (0.1 miles) followed by an immediate left onto Co Rd 7/9/Right Fork Slab Creek Rd (0.7 miles) Co Rd 7/9 becomes Co Rd 9/7. Follow Co Rd 9/7 for 0.9 miles. Destination will be on the right.	

ATTACHMENTS AND SUPPORTING DOCUMENTS	
I have enclosed the following required documents:	
Check payable to WVDEP – Division of Air Quality with the appropriate application fee (per 45CSR13 and 45CSR22). ☒ Check attached to front of application. ☐ I wish to pay by electronic transfer. Contact for payment (incl. name and email address): ☐ I wish to pay by credit card. Contact for payment (incl. name and email address): ☒$500 (Construction, Modification, and Relocation) ☐$300 (Class II Administrative Update) ☒$1,000 NSPS fee for 40 CFR60, Subpart IIII, JJJJ, OOOO and/or OOOOa [1] ☐$2,500 NESHAP fee for 40 CFR63, Subpart ZZZZ and/or HH [2] [1] Only one NSPS fee will apply. [2] Only one NESHAP fee will apply. The Subpart ZZZZ NESHAP fee will be waived for new engines that satisfy requirements by complying with NSPS, Subparts IIII and/or JJJJ. *NSPS and NESHAP fees apply to new construction or if the source is being modified.*	
☒ Responsible Official or Authorized Representative Signature (if applicable)	
☒ Single Source Determination Form **(must be completed in its entirety)** – Attachment A	
☐ Siting Criteria Waiver (if applicable) – Attachment B	☒ Current Business Certificate – Attachment C
☒ Process Flow Diagram – Attachment D	☒ Process Description – Attachment E
☒ Plot Plan – Attachment F	☒ Area Map – Attachment G
☒ G70-D Section Applicability Form – Attachment H	☒ Emission Units/ERD Table – Attachment I
☒ Fugitive Emissions Summary Sheet – Attachment J	
☒ Gas Well Affected Facility Data Sheet (if applicable) – Attachment K	
☒ Storage Vessel(s) Data Sheet (include gas sample data, USEPA Tanks, simulation software (e.g. ProMax, E&P Tanks, HYSYS, etc.), etc. where applicable) – Attachment L	
☒ Natural Gas Fired Fuel Burning Unit(s) Data Sheet (GPUs, Heater Treaters, In-Line Heaters if applicable) – Attachment M	
☐ Internal Combustion Engine Data Sheet(s) (include manufacturer performance data sheet(s) if applicable) – Attachment N	
☒ Tanker Truck Loading Data Sheet (if applicable) – Attachment O	
☐ Glycol Dehydration Unit Data Sheet(s) (include wet gas analysis, GRI- GLYCalc™ input and output reports and information on reboiler if applicable) – Attachment P	
☐ Pneumatic Controllers Data Sheet – Attachment Q	
☐ Pneumatic Pump Data Sheet – Attachment R	
☒ Air Pollution Control Device/Emission Reduction Device(s) Sheet(s) (include manufacturer performance data sheet(s) if applicable) – Attachment S	
☒ Emission Calculations (please be specific and include all calculation methodologies used) – Attachment T	
☒ Facility-wide Emission Summary Sheet(s) – Attachment U	
☒ Class I Legal Advertisement – Attachment V	
☒ One (1) paper copy and two (2) copies of CD or DVD with pdf copy of application and attachments	

GHD SERVICES INC.

▼ PLEASE DETACH AND RETAIN FOR YOUR RECORDS ▼

INVOICE NUMBER	DATE		VOUCHER NO.	AMOUNT
Account Number:		40WVDEPAQ	468470	
CR12417	1/24/2017	401041655		1,500.00

TOTAL: 1,500.00

THIS DOCUMENT IS PROTECTED BY A MICRO-PRINT SIGNATURE LINE, FLUORESCENT PAPER FIBERS, A WATERMARKED BACKER, AND IS REACTIVE TO CHEMICAL ALTERATION

GHD SERVICES INC.
2055 NIAGARA FALLS BLVD, SUITE 3
NIAGARA FALLS, NY 14304

M&T BANK
MANUFACTURERS AND TRADERS TRUST COMPANY
Commercial Banking
Main Office, Ithaca, NY 14850
50-7063-2213

NO. 468470

1/24/2017

PAY **********1,500 DOLLARS AND **********00 CENTS $**********1,500.00

TO THE ORDER OF

WEST VIRGINIA DEPT OF ENVIRONMENTAL
PROTECTION - DIVISION AIR QUALITY
601 57th Street SE
Charleston,, WV 25304 US

GHD SERVICES INC.

AUTHORIZED SIGNATURES

WARNING: THIS DOCUMENT IS VOID IF ACCOUNT NUMBER DOES NOT APPEAR ON THE REVERSE SIDE IN RED

⑈468470⑈ ⑆221370632⑆6000000118910⑈

Attachment R
AUTHORITY OF CORPORATION
OR OTHER BUSINESS ENTITY (DOMESTIC OR FOREIGN)

TO: The West Virginia Department of Environmental Protection, Division of Air Quality

DATE: January 23, 2015

ATTN.: Director

Corporation's / other business entity's Federal Employer I.D. Number 80-0162034

The undersigned hereby files with the West Virginia Department of Environmental Protection, Division of Air Quality, a permit application and hereby certifies that the said name is a trade name which is used in the conduct of an incorporated business or other business entity.

Further, the corporation or the business entity certifies as follows:

(1) Barry Schatz (is/are) the authorized representative(s) and in that capacity may represent the interest of the corporation or the business entity and may obligate and legally bind the corporation or the business entity.

(2) The corporation or the business entity is authorized to do business in the State of West Virginia.

(3) If the corporation or the business entity changes its authorized representative(s), the corporation or the business entity shall notify the Director of the West Virginia Department of Environmental Protection, Division of Air Quality, immediately upon such change.

President or Other Authorized Officer
(Vice President, Secretary, Treasurer or other official in charge of a principal business function of the corporation or the business entity)

(If not the President, then the corporation or the business entity must submit certified minutes or bylaws stating legal authority of other authorized officer to bind the corporation or the business entity).

Secretary

Name of Corporation or business entity

Attachment A
Single Source Determination Form

ATTACHMENT A - SINGLE SOURCE DETERMINATION FORM

Classifying multiple facilities as one "stationary source" under 45CSR13, 45CSR14, and 45CSR19 is based on the definition of Building, structure, facility, or installation as given in §45-14-2.13 and §45-19-2.12. The definition states:

"Building, Structure, Facility, or Installation" means all of the pollutant-emitting activities which belong to the same industrial grouping, are located on one or more contiguous or adjacent properties, and are under the control of the same person (or persons under common control). Pollutant-emitting activities are a part of the same industrial grouping if they belong to the same "Major Group" (i.e., which have the same two (2)-digit code) as described in the Standard Industrial Classification Manual, 1987 (United States Government Printing Office stock number GPO 1987 0-185-718:QL 3).

The Source Determination Rule for the oil and gas industry was published in the Federal Register on June 3, 2016 and will become effective on August 2, 2016. EPA defined the term "adjacent" and stated that equipment and activities in the oil and gas sector that are under common control will be considered part of the same source if they are located on the same site or on sites that share equipment and are within ¼ mile of each other.

Is there equipment and activities in the same industrial grouping (defined by SIC code)?
Yes ☒ No ☐

Is there equipment and activities under the control of the same person/people?
Yes ☒ No ☐

Is there equipment and activities located on the same site or on sites that share equipment and are within ¼ mile of each other?
Yes ☐ No ☒

John Campbell North Well Pad calculation of potential to emit included all of the emission sources that belong to the same industrial grouping, are located on contiguous or adjacent properties, and are under the control of the same person. The nearest emission source that belongs to the same industrial grouping and under the control of the same person but not located on contiguous or adjacent property is the Lockhart Heirs West Well Pad. This is approximately 2.24 miles northeast of the facility.

Attachment B
Siting Criteria Waiver

Attachment B

Siting Waiver
John Campbell North Well Pad
Antero Resources Corporation
Ritchie County, West Virginia

A Siting Waiver form is not required because there are no occupied dwelling structures within 300 feet of John Campbell North Well Pad.

Attachment C
Current Business Certificate

State of West Virginia

Certificate

I, Natalie E. Tennant, Secretary of State of the State of West Virginia, hereby certify that

ANTERO RESOURCES CORPORATION

a corporation formed under the laws of Delaware, which is authorized to transact business in West Virginia by a Certificate of Authority has filed in my office as required by the provisions of the West Virginia Code, a copy of an amendment to its Articles of Incorporation authenticated by the proper office of the state or country of its incorporation and was found to conform to law.

Therefore, I issue this

CERTIFICATE OF AMENDMENT TO CERTIFICATE OF AUTHORITY

Given under my hand and the Great Seal of the State of West Virginia on this day of June 10, 2013

Natalie E Tennant

Secretary of State

FILED

JUN 10 2013

IN THE OFFICE OF SECRETARY OF STATE

Natalie E. Tennant
Secretary of State
1900 Kanawha Blvd E
Bldg 1, Suite 157-K
Charleston, WV 25305

Penney Barker, Manager
Corporations Division
Tel: (304)558-8000
Fax: (304)558-8381
Website: www.wvsos.com
E-mail: business@wvsos.com

Office Hours: Monday – Friday
8:30 a.m. – 5:00 p.m. ET

FILE ONE ORIGINAL
(Two if you want a filed stamped copy returned to you)
FEE: $25.00

APPLICATION FOR AMENDED CERTIFICATE OF AUTHORITY

****** In accordance with the provisions of the West Virginia Code, the undersigned corporation hereby **** applies for an Amended Certificate of Authority and submits the following statement:**

1. Name under which the corporation was authorized to transact business in WV: Antero Resources Appalachian Corporation

2. Date Certificate of Authority was issued in West Virginia: 6/25/2008

3. Corporate name has been changed to: Antero Resources Corporation
(Attach one Certified Copy of Name Change as filed in home State of incorporation.)

4. Name the corporation elects to use in WV: Antero Resources Corporation
(due to home state name not being available)

5. Other amendments:
(attach additional pages if necessary)

6. **Name and phone number of contact person.** (This is optional, however, if there is a problem with the filing, listing a contact person and phone number may avoid having to return or reject the document.)

Alvyn A. Schopp — Contact Name
(303) 357-7310 — Phone Number

7. **Signature information** (See below ******Important Legal Notice Regarding Signature*):

Print Name of Signer: Alvyn A. Schopp Title/Capacity: Authorized Person

Signature: Alvyn A. Schopp **Date:** June 10, 2013

******Important Legal Notice Regarding Signature*: **Per West Virginia Code §31D-1-129. Penalty for signing false document. Any person who signs a document he or she knows is false in any material respect and knows that the document is to be delivered to the secretary of state for filing is guilty of a misdemeanor and, upon conviction thereof, shall be fined not more than one thousand dollars or confined in the county or regional jail not more than one year, or both.**

Delaware

The First State

I, JEFFREY W. BULLOCK, SECRETARY OF STATE OF THE STATE OF DELAWARE, DO HEREBY CERTIFY THE ATTACHED IS A TRUE AND CORRECT COPY OF THE CERTIFICATE OF AMENDMENT OF "ANTERO RESOURCES APPALACHIAN CORPORATION", CHANGING ITS NAME FROM "ANTERO RESOURCES APPALACHIAN CORPORATION" TO "ANTERO RESOURCES CORPORATION", FILED IN THIS OFFICE ON THE TENTH DAY OF JUNE, A.D. 2013, AT 9:37 O'CLOCK A.M.

A FILED COPY OF THIS CERTIFICATE HAS BEEN FORWARDED TO THE NEW CASTLE COUNTY RECORDER OF DEEDS.

Jeffrey W. Bullock, Secretary of State

4520810 8100

130754186

AUTHENTICATION: 0496546

DATE: 06-10-13

You may verify this certificate online at corp.delaware.gov/authver.shtml

State of Delaware
Secretary of State
Division of Corporations
Delivered 09:37 AM 06/10/2013
FILED 09:37 AM 06/10/2013
SRV 130754186 - 4520810 FILE

AMENDMENT TO THE AMENDED AND RESTATED CERTIFICATE OF INCORPORATION OF ANTERO RESOURCES APPALACHIAN CORPORATION

Antero Resources Appalachian Corporation (the "Corporation"), a corporation organized and existing under the laws of the State of Delaware, hereby certifies as follows:

1. The original Certificate of Incorporation of the Corporation was filed under the name Antero Resources Barnett Corporation with the filing of the original Certificate of Incorporation of the Corporation with the Secretary of State of the State of Delaware on March 18, 2008.

2. This Amendment to the Amended and Restated Certificate of Incorporation has been duly adopted and approved in accordance with Sections 242 of the General Corporation Law of the State of Delaware.

3. Article FIRST of the Amended and Restated Certificate of Incorporation is hereby amended to read in its entirety as follows:

FIRST. The name of the Corporation is Antero Resources Corporation.

IN WITNESS WHEREOF, the Corporation has caused this Certificate of Amendment to be executed by its duly authorized officer on the 10th day of June, 2013.

ANTERO RESOURCES APPALACHIAN CORPORATION

By: _____
Name: Alvyn A. Schopp
Title: Vice President of Accounting & Administration / Treasurer

Attachment D
Process Flow Diagram

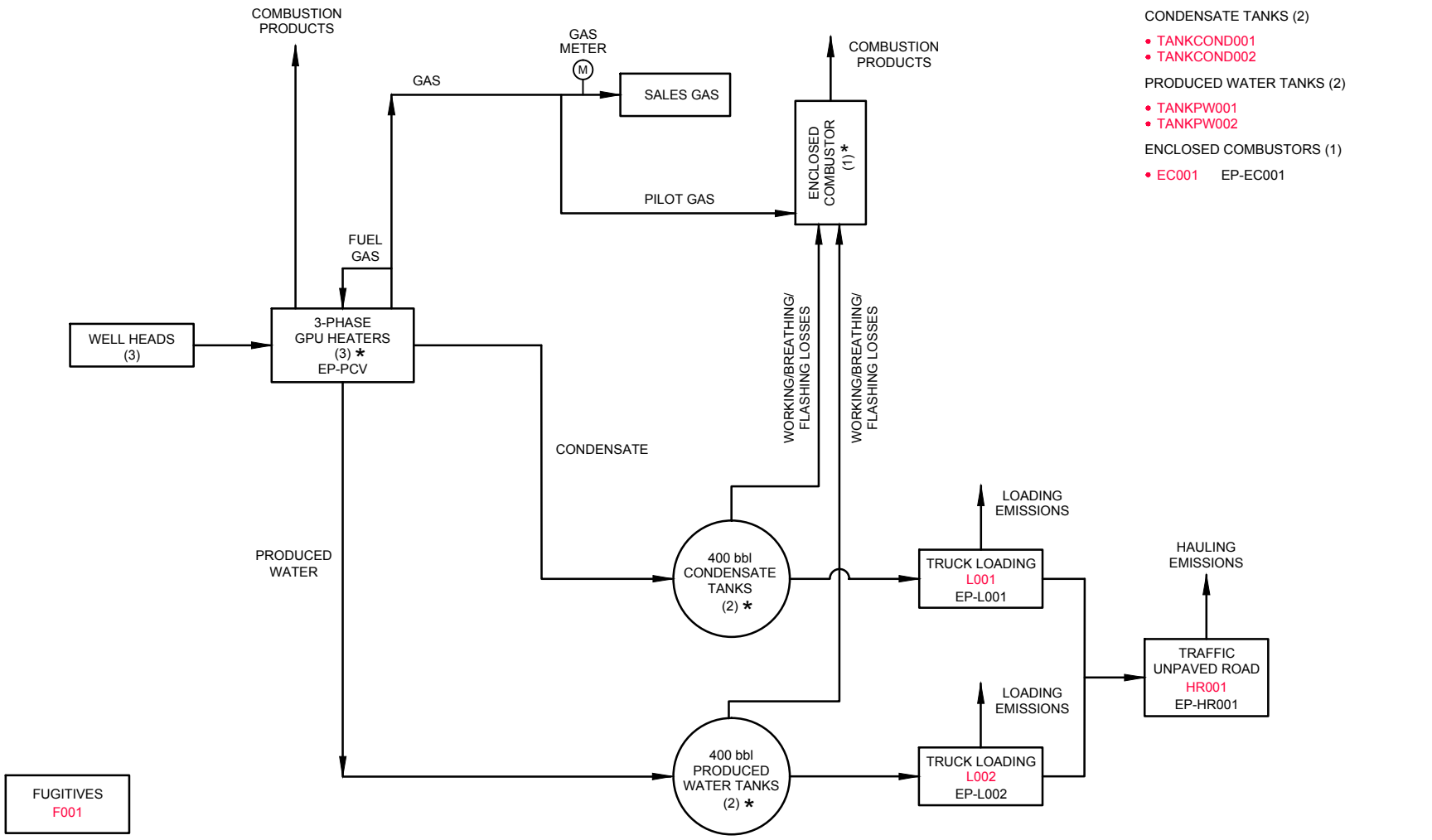

Attachment D

PROCESS FLOW DIAGRAM - ANTERO RESOURCES JOHN CAMPBELL NORTH WELL PAD

Ritchie County, West Virginia

Attachment E
Process Description

Attachment E

Process Description
John Campbell North Well Pad
Antero Resources Corporation
Ritchie County, West Virginia

A mixture of condensate, water, and entrained gas from the condensate and gas wells enters the facility through a series of gas production units (GPU001-GPU003) which are 3 phase separators where the gas, condensate, and produced water are separated. The GPUs are fueled by a slip stream of the separated gas. The separated gas is then metered and sent to the sales gas pipeline. The separated condensate and water from the separators flow to their respective storage tanks (TANKCOND001-002 and TANKPW001-002).

The facility has two (2) tanks (TANKCOND001-002) on site to store condensate and two (2) tanks (TANKPW001-002) to store produced water prior to removal from the site. The flashing, working and breathing losses from the tanks are routed to the enclosed combustor (EC001) to control the emissions. The enclosed combustors that will be used to control emissions are designed to achieve a VOC destruction efficiency of 98 percent.

Condensate and produced water are transported off site on an as needed basis via tanker truck. Truck loading connections are in place to pump condensate (L001) and produced water (L002) from the storage tanks into tanker trucks. Emissions from the loading operations are vented to the atmosphere.

Emissions from the facility's emission sources were calculated using the site specific analysis of the condensate and gas from Kuhn 1H, one of the wells in the John Campbell North Well Pad.

Attachment F
Plot Plan

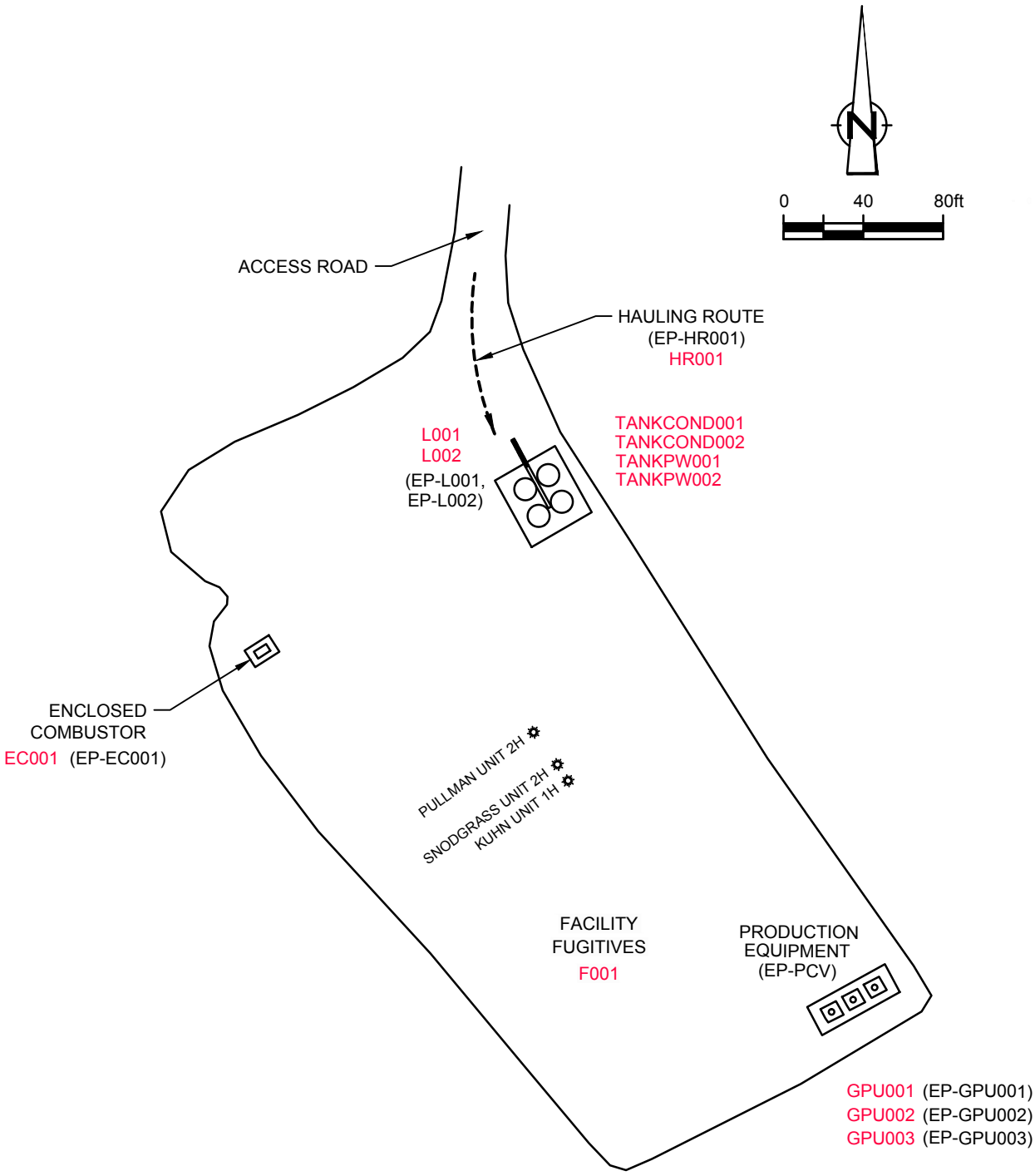

Attachment F

PLOT PLAN
JOHN CAMPBELL NORTH WELL PAD
ANTERO RESOURCES
Ritchie County, West Virginia

Attachment G
Area Map

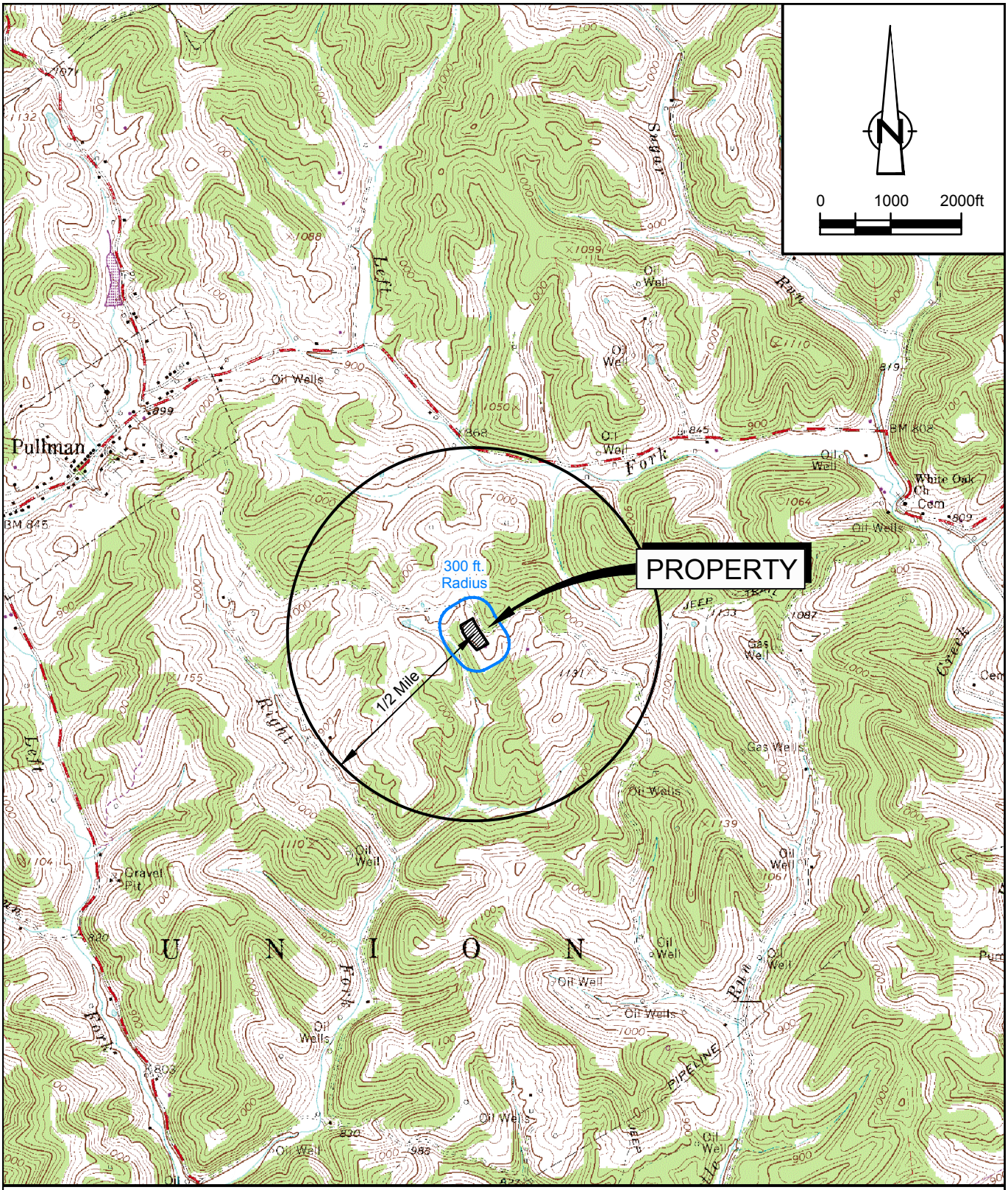

SOURCE: USGS QUADRANGLE MAP;
PULLMAN, WEST VIRGINIA

SITE COORDINATES: LAT. 39.180878, LONG. -80.930117
SITE ELEVATION: 1015 ft AMSL

GHD

Attachment G

AREA MAP
JOHN CAMPBELL NORTH WELL PAD
ANTERO RESOURCES
Ritchie County, West Virginia

Attachment H
G70-C Section Applicability Form

ATTACHMENT H – G70-D SECTION APPLICABILITY FORM

General Permit G70-D Registration[1]
Section Applicability Form

General Permit G70-D was developed to allow qualified applicants to seek registration for a variety of sources. These sources include gas well affected facilities, storage vessels, gas production units, in-line heaters, heater treaters, glycol dehydration units and associated reboilers, pneumatic controllers, centrifugal compressors, reciprocating compressors, reciprocating internal combustion engines (RICEs), tank truck loading, fugitive emissions, completion combustion devices, flares, enclosed combustion devices, and vapor recovery systems. All registered facilities will be subject to Sections 1.0, 2.0, 3.0, and 4.0.

General Permit G70-D allows the registrant to choose which sections of the permit they are seeking registration under. Therefore, please mark which additional sections that you are applying for registration under. If the applicant is seeking registration under multiple sections, please select all that apply. Please keep in mind, that if this registration is approved, the issued registration will state which sections will apply to your affected facility.

GENERAL PERMIT G70-D APPLICABLE SECTIONS	
☒Section 5.0	Gas Well Affected Facility (NSPS, Subpart OOOO/OOOOa)
☒Section 6.0	Storage Vessels Containing Condensate and/or Produced Water[1]
☐Section 7.0	Storage Vessel Affected Facility (NSPS, Subpart OOOO/OOOOa)
☒Section 8.0	Control Devices and Emission Reduction Devices not subject to NSPS Subpart OOOO/OOOOa and/or NESHAP Subpart HH
☒Section 9.0	Small Heaters and Reboilers not subject to 40CFR60 Subpart Dc
☐Section 10.0	Pneumatic Controllers Affected Facility (NSPS, Subpart OOOO/OOOOa)
☐Section 11.0	Pneumatic Pump Affected Facility (NSPS, Subpart OOOOa)
☒Section 12.0	Fugitive Emissions GHG and VOC Standards (NSPS, Subpart OOOOa)
☐Section 13.0	Reciprocating Internal Combustion Engines, Generator Engines
☒Section 14.0	Tanker Truck/Rail Car Loading[2]
☐Section 15.0	Glycol Dehydration Units[3]

1 *Applicants that are subject to Section 6 may also be subject to Section 7 if the applicant is subject to the NSPS, Subparts OOOO or OOOOa control requirements or the applicable control device requirements of Section 8.*

2 *Applicants that are subject to Section 14 may also be subject to control device and emission reduction device requirements of Section 8.*

3 *Applicants that are subject to Section 15 may also be subject to the requirements of Section 9 (reboilers). Applicants that are subject to Section 15 may also be subject to control device and emission reduction device requirements of Section 8.*

11

Attachment I
Emission Units/ ERD Table

ATTACHMENT I – EMISSION UNITS / EMISSION REDUCTION DEVICES (ERD) TABLE

Include ALL emission units and air pollution control devices /ERDs that will be part of this permit application review. This information is required for all sources regardless of whether it is a construction, modification, or administrative update.

Emission Unit ID[1]	Emission Point ID[2]	Emission Unit Description	Year Installed	Manufac. Date[3]	Design Capacity	Type[4] and Date of Change	Control Device(s)[5]	ERD (s)[6]
GPU001-002	EP-GPU001-002	Gas Production Unit Heater	2013		1 MMBtu/hr	Existing	N/A	
GPU003-004	EP-GPU003-004	Gas Production Unit Heater	2014		1.5 MMBtu/hr	Removal-2017	N/A	
GPU003	EP-GPU003	Gas Production Unit Heater	2017		1 MMBtu/hr	New	N/A	
F001	F001	Fugitives	2013		N/A	Existing	N/A	
TANKCOND001-002	EP-EC001	Condensate Tank F/W/B	2013		400 bbl each	Modification[1]	EP-EC001	
TANKCOND003-004	EP-EC001	Condensate Tank F/W/B	2013		400 bbl each	Removal - 2017	EP-EC001	
TANKPW001-002	EP-EC001	PW Tank F/W/B	2017		400 bbl each	Modification[2]	EP-EC001	
L001	EP-L001	Loading (Condensate)	2013		10080 gal/hr 919800 gal/yr	Modification[3]	N/A	
L002	EP-L002	Loading (Produced Water)	2013		10080 gal/hr 1533000 gal/yr	Modification[4]	N/A	
HR001	EP-HR001	Haul Road	2013		Tanker Trucks Condensate: 110 trips per year Tanker Trucks PW: 183 trips per year Pick Up Truck: 730 trips per year	Modification[5]	N/A	
EC001	EP-EC001	Enclosed Combustor	2013		12 MMBtu/hr	Modification[6]	N/A	
PCV	EP-PCV	Pneumatic CV	2013		6.6 scf/day/PCV	Modification[7]	N/A	
ENG001	EP-ENG001	Compressor Engine	2014	2013	24 HP	Removal-2017	Non-Selective Catalytic Reduction	

1 For Emission Units (or Sources) use the following numbering system: 1S, 2S, 3S, ... or other appropriate designation.
2 For Emission Points use the following numbering system: 1E, 2E, 3E, ... or other appropriate designation.
3 When required by rule.
4 New, modification, removal, existing.
5 For Control Devices use the following numbering system: 1C, 2C, 3C, ... or other appropriate designation.
6 For ERDs use the following numbering system: 1D, 2D, 3D, ... or other appropriate designation.

Notes:

1. This is not a physical modification. Change in emissions due to decrease in condensate throughput and change of number of tanks.
2. This is not a physical modification. Change in emissions due to decrease in PW throughput.
3. This is not physical modification. Change in emissions due to decrease in loading throughput.
4. This is not physical modification. Change in emissions due to decrease in produced water loading throughput.
5. This is not physical modification. Change in emissions due to decrease in loading throughput.
6. This is not physical modification. Change in emissions due to decrease in throughput.
7. This is not physical modification. Change in emissions due to the change of GPUs.

Attachment J
Fugitive Emissions Summary Sheet

ATTACHMENT J – FUGITIVE EMISSIONS SUMMARY SHEET

Sources of fugitive emissions may include loading operations, equipment leaks, blowdown emissions , etc.
Use extra pages for each associated source or equipment if necessary.

Source/Equipment:

Leak Detection Method Used	☐ Audible, visual, and olfactory (AVO) inspections	☑ Infrared (FLIR) cameras	☐ Other (please describe)	☐ None required

Component Type	Closed Vent System	Count	Source of Leak Factors (EPA, other (specify))	Stream type (gas, liquid, etc.)	Estimated Emissions (tpy)			
					VOC	HAP	GHG (methane)	GHG (CO2e)
Valves	☐ Yes ☑ No	150	EPA	gas	1.176	0.121	4.027	100.685
Valves	☐ Yes ☑ No	156	EPA	liquid	3.643	0.324	0.029	0.728
Connections (Not sampling)	☐ Yes ☑ No	177	EPA	gas	0.062	0.006	0.211	5.280
Flanges	☐ Yes ☑ No	39	EPA	gas	0.027	0.003	0.091	2.269

1 Other equipment types may include compressor seals, relief valves, diaphragms, drains, meters, etc.

Please provide an explanation of the sources of fugitive emissions (e. g. pigging operations, equipment blowdowns, pneumatic controllers, etc.)

Please indicate if there are any closed vent bypasses (include component)

Specify all equipment used in the closed vent system (e. g. VRU, ERD, thief hatches, tanker truck loading, etc.)

Attachment K
Gas Well Affected Facility Data Sheet

ATTACHMENT K – GAS WELL AFFECTED FACILITY DATA SHEET

Complete this data sheet if you are the owner or operator of a gas well affected facility for which construction, modification or reconstruction commenced after August 23, 2011. This form must be completed for natural gas well affected facilities regardless of when flowback operations occur (or have occurred).

API Number	Date of Flowback	Date of Well Completion	Green Completion and/or Combustion Device	Subject to OOOO or OOOOa?
47085099960000	9/10/2014	8/13/2014	Green Completion	OOOO
47085100020000	5/11/2013	5/3/2013	Green Completion	OOOO
47085099780000	5/11/2013	1/29/2013	Green Completion	OOOO

Note: If future wells are planned and no API number is available please list as PLANNED.
If there are existing wells that commenced construction prior to August 23, 2011, please acknowledge as existing.

This is the same API (American Petroleum Institute) well number(s) provided in the well completion notification and as provided to the WVDEP, Office of Oil and Gas for the well permit. The API number application without the state code (047).

Every oil and gas well permitted in West Virginia since 1929 has been issued an API number. This API is used by agencies to identify and track oil and gas wells.

The API number has the following format: 047-001-00001

Where,

047 = State code. The state code for WV is 047.

001 = County Code. County codes are odd numbers, beginning with 001 (Barbour) and continuing to 109 (Wyoming).

00001 = Well number. Each well will have a unique well number.

Attachment L
Storage Vessel Data Sheet

ATTACHMENT L – STORAGE VESSEL DATA SHEET

Complete this data sheet if you are the owner or operator of a storage vessel that contains condensate and/or produced water. This form must be completed for each new or modified bulk liquid storage vessel(s) that contains condensate and/or produced water . (If you have more than one (1) identical tank (i.e. 4-400 bbl condensate tanks), then you can list all on one (1) data sheet). **Include gas sample analysis, flashing emissions, working and breathing losses, USEPA Tanks, simulation software (ProMax, E&P Tanks, HYSYS, etc.), and any other supporting documents where applicable.**

The following information is REQUIRED:

☐ Composition of the representative sample used for the simulation
☐ For each stream that contributes to flashing emissions:
  ☐ Temperature and pressure (inlet and outlet from separator(s))
  ☐ Simulation-predicted composition
  ☐ Molecular weight
  ☐ Flow rate
☐ Resulting flash emission factor or flashing emissions from simulation
☐ Working/breathing loss emissions from tanks and/or loading emissions if simulation is used to quantify those emissions

Additional information may be requested if necessary.

GENERAL INFORMATION (REQUIRED)

1. Bulk Storage Area Name: Tanks	2. Tank Name: Condensate Tank 001-02
3. Emission Unit ID number: TANKCOND001-002	4. Emission Point ID number. EP-EC001
5. Date Installed , Modified or Relocated (for existing tanks) 2013 Was the tank manufactured after August 23, 2011 and on or before September 18, 2015? ☑ Yes ☐ No Was the tank manufactured after September 18, 2015? ☐ Yes ☑ No	6. Type of change: ☑ New construction ☐ New stored material ☐ Other ☐ Relocation

7A. Description of Tank Modification (if applicable)

7B. Will more than one material be stored in this tank? If so, a separate form must be completed for each material.
☐ Yes ☑ No

7C. Was USEPA Tanks simulation software utilized?
☐ Yes ☑ No

If Yes, please provide the appropriate documentation and items 8-42 below are not required.

TANK INFORMATION

8. Design Capacity (specify barrels or gallons). Use the internal cross-sectional area multiplied by internal height. 400bbls

9A. Tank Internal Diameter (ft): 12	9B. Tank Internal Height (or Length) (ft): 20
10A. Maximum Liquid Height (ft): 18	10B. Average Liquid Height (ft): 10
11A. Maximum Vapor Space Height (ft): 18	11B. Average Vapor Space Height (ft): 10

12. Nominal Capacity (specify barrels or gallons). This is also known as "working volume" and considers design liquid levels and overflow valve heights.: 400bbls

13A. Maximum annual throughput (gal/yr): 919800	13B. Maximum daily throughput (gal/day): 2520
14. Number of Turnovers per year (annual net throughput/maximum tank liquid volume): 28	15. Maximum tank fill rate (gal/min) 168

16. Tank fill method ☐ Submerged ☑ Splash ☐ Bottom Loading

17. Is the tank system a variable vapor space system? ☐ Yes ☑ No

If yes, (A) What is the volume expansion capacity of the system (gal)?
(B) What are the number of transfers into the system per year?

18. Type of tank (check all that apply):

☑ Fixed Roof ☑ vertical ☐ horizontal ☑ flat roof ☐ cone roof ☐ dome roof ☐ other (describe)
☐ External Floating Roof ☐ pontoon roof ☐ double deck roof
☐ Domed External (or Covered) Floating Roof
☐ Internal Floating Roof ☐ vertical column support ☐ self-supporting
☐ Variable Vapor Space ☐ lifter roof ☐ diaphragm
☐ Pressurized ☐ spherical ☐ cylindrical
☐ other

ATTACHMENT L – STORAGE VESSEL DATA SHEET

PRESSURE/VACUUM CONTROL DATA

19. Check as many as apply:

☐ Does Not Apply

☐ Inert Gas Blanket of

☑ Vent to Vapor Combustion Device (vapor combustors, flares, thermal oxidizers, enclosed combustors)

☐ Conservation Vent (psig)

Vacuum Setting Pressure Setting

☐ Emergency relief Valve (psig)

Vacuum Setting Pressure Setting

☐ Thief Hatch Weighted ☐ Yes ☐ No

Complete appropriate Air Pollution Control Device Sheet

20. Expected Emission Rate (submit Test Data or Calculations here or elsewhere in the application).

Material Name	Flashing Loss		Breathing Loss		Working Loss		Total Emission Loss		[1]Estimation Method
	lb/hr	tpy	lb/hr	tpy	lb/hr	tpy	lb/hr	tpy	
Please see Table 6 and Table 7									

TANK CONSTRUCTION & OPERATION INFORMATION

21. Tank Shell Construction:
☐ Riveted ☐ Gunite lined ☐ Epoxy-coated ☑ Other (describe): Steel

21A. Shell Color: Green | 21B. Roof Color: Green | 21C. Year Last Painted 2013

22. Shell Condition (if metal and unlined):
☑ No Rust ☐ Light Rust ☐ Dense Rust ☐ Not applicable

22A. Is the tank heated?
☐ Yes ☑ No

22B. If yes, operating temperature:

22C. If yes, how is heat provided to tank?

23. Operating Pressure Range (psig): 0 psig, atmospheric
Must be listed for tanks using VRUs with closed vent system

24. Is the tank a Vertical Fixed Roof Tank?
☑ Yes ☐ No

24A. If yes, for dome roof provide radius (ft): NA

24B. If yes, for cone roof, provide slop (ft/ft): NA

25. Complete the following section for **Floating Roof Tanks** Does Not Apply

25A. Year Internal Floaters Installed:

25B. Primary Seal Type:
☐ Metallic (mechanical) shoe seal ☐ Liquid mounted resilient seal
☐ Vapor mounted resilient seal ☐ Other (describe):

25C. Is the Floating Roof equipped with a Secondary Seal? ☐ Yes ☐ No

25D. If YES, how is the secondary seal mounted? (check one)
☐ Shoe ☐ Rim ☐ Other (describe)

25E. Is the Floating Roof equipped with a weather shield? ☐ Yes ☐ No

25F. Describe deck fittings

26. Complete the following section for Internal Floating Roof Tanks ☑ Does not apply

26A. Deck Type:
☐ Bolted ☐ Welded

26B. For bolted decks, provide deck construction

26C. Deck seam:
☐ 5 ft. wide ☐ 6 ft. wide ☐ 7 ft. wide ☐ 5 x 7.5 ft wide ☐ 5 x 12 ft wide ☐ Other (describe)

26D. Deck seam length (ft)

26E. Area of deck (ft_2)

26F. For column supported tanks:
Number of columns:

26G. For column supported tanks, Diameter of each column:

27. Closed Vent System with VRU ☐ Yes ☑ No

28. Closed Vent System with Enclosed Combustor? ☑ Yes ☐ No

ATTACHMENT L – STORAGE VESSEL DATA SHEET

SITE INFORMATION

29. Provide the city and state on which the data in this section are based.: West Union, WV			
30. Daily Average Ambient Temperature (°F):	72.10	31. Annual Average Maximum Temperature (°F):	75.94
32. Annual Average Minimum Temperature (°F):	46.56	33. Average Wind Speed (miles/hr): 18.5 mph	
34. Annual Average Solar Insulation Factor (BTU/(ftz·day))	1030.235999	35. Atmospheric Pressure (psia): 14.8 (based off local conditions, could not find annual)	

LIQUID INFORMATION

36. Average daily temperature range of bulk liquid (F):	72.10	36A. Minimum (°F):	46.56	36B. Maximum (°F)	75.94
37. Average operating pressure range of tank (psig):	atmosphere	37A. Minimum (psig)	0	37B. Maximum (psig)	atmosphere

38A. Minimum Liquid Surface Temperature (°F)	46.56	38B. Corresponding Vapor Pressure (psia)	2.2013
39A. Average Liquid Surface Temperature (°F)	72.10	39B. Corresponding Vapor Pressure (psia)	3.6401
40A. Maximum Liquid Surface Temperature (°F)	75.94	40B. Corresponding Vapor Pressure (psia)	3.9100

41. Provide the following for <u>each</u> liquid or gas to be stored in tank. Add additional pages if necessary.

41A. Material Name or Composition	Condensate		
41B. CAS Number	mix of HC		
41C. Liquid Density (lb/gal)	5.7300		
41D. Liquid Molecular Weight (lb/lb-mole)	96.80		
41E. Vapor Molecular Weight (lb/lb-mole)	44.1017		
Maximum Vapor Pressure 41F. True (psia)	3.9100		
41G. Reid (psia)	5.02		
Months Storage per Year 41H. From - To	year round		
Final maximum gauge pressure and temperature prior to transfer into tank used as inputs into flashing emission calculations 42.	165 psig; 70 F		

ATTACHMENT L – STORAGE VESSEL DATA SHEET

Complete this data sheet if you are the owner or operator of a storage vessel that contains condensate and/or produced water. This form must be completed for each new or modified bulk liquid storage vessel(s) that contains condensate and/or produced water . (If you have more than one (1) identical tank (i.e. 4-400 bbl condensate tanks), then you can list all on one (1) data sheet). **Include gas sample analysis, flashing emissions, working and breathing losses, USEPA Tanks, simulation software (ProMax, E&P Tanks, HYSYS, etc.), and any other supporting documents where applicable.**

The following information is REQUIRED:

☐ Composition of the representative sample used for the simulation
☐ For each stream that contributes to flashing emissions:
- ☐ Temperature and pressure (inlet and outlet from separator(s))
- ☐ Simulation-predicted composition
- ☐ Molecular weight
- ☐ Flow rate

☐ Resulting flash emission factor or flashing emissions from simulation
☐ Working/breathing loss emissions from tanks and/or loading emissions if simulation is used to quantify those emissions

Additional information may be requested if necessary.

GENERAL INFORMATION (REQUIRED)

1. Bulk Storage Area Name: Tanks	2. Tank Name: Produced Water Tank 001-002
3. Emission Unit ID number: TANKPW001-002	4. Emission Point ID number. EP-EC001
5. Date Installed , Modified or Relocated (for existing tanks) 2013 Was the tank manufactured after August 23, 2011 and on or before September 18, 2015? ☑ Yes ☐ No Was the tank manufactured after September 18, 2015? ☐ Yes ☑ No	6. Type of change: ☑ New construction ☐ New stored material ☐ Other ☐ Relocation

7A. Description of Tank Modification (if applicable)

7B. Will more than one material be stored in this tank? If so, a separate form must be completed for each material.
☐ Yes ☑ No

7C. Was USEPA Tanks simulation software utilized?
☐ Yes ☑ No

If Yes, please provide the appropriate documentation and items 8-42 below are not required.

TANK INFORMATION

8. Design Capacity (specify barrels or gallons). Use the internal cross-sectional area multiplied by internal height. 400bbls

9A. Tank Internal Diameter (ft): 12	9B. Tank Internal Height (or Length) (ft): 20
10A. Maximum Liquid Height (ft): 18	10B. Average Liquid Height (ft): 10
11A. Maximum Vapor Space Height (ft): 18	11B. Average Vapor Space Height (ft): 10

12. Nominal Capacity (specify barrels or gallons). This is also known as "working volume" and considers design liquid levels and overflow valve heights.: 400bbls

13A. Maximum annual throughput (gal/yr): 1533000	13B. Maximum daily throughput (gal/day): 4200
14. Number of Turnovers per year (annual net throughput/maximum tank liquid volume): 46	15. Maximum tank fill rate (gal/min) 168

16. Tank fill method ☐ Submerged ☑ Splash ☐ Bottom Loading

17. Is the tank system a variable vapor space system? ☐ Yes ☑ No

If yes, (A) What is the volume expansion capacity of the system (gal)?
(B) What are the number of transfers into the system per year?

18. Type of tank (check all that apply):

☑ Fixed Roof ☑ vertical ☐ horizontal ☑ flat roof ☐ cone roof ☐ dome roof ☐ other (describe)
☐ External Floating Roof ☐ pontoon roof ☐ double deck roof
☐ Domed External (or Covered) Floating Roof
☐ Internal Floating Roof ☐ vertical column support ☐ self-supporting
☐ Variable Vapor Space ☐ lifter roof ☐ diaphragm
☐ Pressurized ☐ spherical ☐ cylindrical

ATTACHMENT L – STORAGE VESSEL DATA SHEET

PRESSURE/VACUUM CONTROL DATA

19. Check as many as apply:

☐ Does not apply ☐ Rupture Disc (psig)

☐ Inert Gas Blanket ☐ Carbon Adsorption

☑ Vent to Vapor Combustion Device (vapor combustors, flares, thermal oxidizers, enclosed combustors)

☐ Conservation Vent (psig)

Vacuum Setting Pressure Setting

☐ Emergency relief Valve (psig)

Vacuum Setting Pressure Setting

☐ Thief Hatch Weighted ☐ Yes ☐ No

Complete appropriate Air Pollution Control Device Sheet

20. Expected Emission Rate (submit Test Data or Calculations here or elsewhere in the application).

Material Name	Flashing Loss		Breathing Loss		Working Loss		Total Emission Loss		[1] Estimation Method
	lb/hr	tpy	lb/hr	tpy	lb/hr	tpy	lb/hr	tpy	
Please see Table 6 and Table 7									

TANK CONSTRUCTION & OPERATION INFORMATION

21. Tank Shell Construction:

☐ Riveted ☐ Gunite lined ☐ Epoxy-coated ☑ Other(describe): Steel

21A. Shell Color: Green	21B. Roof Color: Green	21C. Year Last Painted 2013

22. Shell Condition (if metal and unlined):

☑ No Rust ☐ Light Rust ☐ Dense Rust ☐ Not applicable

22A. Is the tank heated? ☐ Yes ☑ No	22B. If yes, operating temperature:	22C. If yes, how is heat provided to tank?

23. Operating Pressure Range (psig): 0 psig, atmospheric

Must be listed for tanks using VRUs with closed vent system

24. Is the tank a Vertical Fixed Roof Tank? ☑ Yes ☐ No	24A. If yes, for dome roof provide radius (ft): NA	24B. If yes, for cone roof, provide slop (ft/ft): NA

25. Complete the following section for **Floating Roof Tanks** Does Not Apply

25A. Year Internal Floaters Installed:

25B. Primary Seal Type: ☐ Metallic (mechanical) shoe seal ☐ Liquid mounted ☐ Vapor mounted resilient seal ☐ Other (describe):

25C. Is the Floating Roof equipped with a Secondary Seal? ☐ Yes ☐ No

25D. If YES, how is the secondary seal mounted? (check one) ☐ Shoe ☐ Rim ☐ Other(describe):

25E. Is the Floating Roof equipped with a weather shield? ☐ Yes ☐ No

25F. Describe deck fittings

26. Complete the following section for Internal Floating Roof Tanks ☑ Does not apply

26A. Deck Type: ☐ Bolted ☐ Welded	26B. For bolted decks, provide deck construction

26C. Deck seam:

☐ 5 ft. wide ☐ 6 ft. wide ☐ 7 ft. wide ☐ 5 x 7.5 ft. wide ☐ 5 x 12 ft. wide ☐ Other (describe)

26D. Deck seam length (ft)	26E. Area of deck (ft^2)	26F. For column supported tanks: Number of columns:	26G. For column supported tanks, Diameter of each column:

27. Closed Vent System with VRU ☐ Yes ☑ No

28. Closed Vent System with Enclosed Combustor? ☑ Yes ☐ No

ATTACHMENT L – STORAGE VESSEL DATA SHEET

SITE INFORMATION

29. Provide the city and state on which the data in this section are based.: West Union, WV			
30. Daily Average Ambient Temperature (°F):	72.10	31. Annual Average Maximum Temperature (°F):	75.94
32. Annual Average Minimum Temperature (°F):	46.56	33. Average Wind Speed (miles/hr): 5.9 mph	
34. Annual Average Solar Insulation Factor (BTU/(ft2· day))	1030.236	35. Atmospheric Pressure (psia): 14.8 (based off local conditions, could not find annual)	

LIQUID INFORMATION

36. Average daily temperature range of bulk liquid (F):	72.10	36A. Minimum (°F):	46.56	36B. Maximum (°F)	75.94
37. Average operating pressure range of tank (psig):	atmosphere	37A. Minimum (psig)	0	37B. Maximum (psig)	atmosphere

38A. Minimum Liquid Surface Temperature (°F)	46.56	38B. Corresponding Vapor Pressure (psia)	0.2280
39A. Average Liquid Surface Temperature (°F)	72.10	39B. Corresponding Vapor Pressure (psia)	0.4525
40A. Maximum Liquid Surface Temperature (°F)	75.94	40B. Corresponding Vapor Pressure (psia)	0.4988

41. Provide the following for each liquid or gas to be stored in tank. Add additional pages if necessary.

41A. Material Name or Composition	Produced Water		
41B. CAS Number	mix of HC and water		
41C. Liquid Density (lb/gal)	8.3300		
41D. Liquid Molecular Weight (lb/lb-mole)	18.44		
41E. Vapor Molecular Weight (lb/lb-mole)	18.4385		
Maximum Vapor Pressure 41F. True (psia)	0.4988		
41G. Reid (psia)	1.0332		
Months Storage per Year 41H. From - To	year round		
Final maximum gauge pressure and temperature prior to transfer into tank used as inputs into flashing emission calculations 42.	165 psig; 70 F		

Attachment M
Natural Gas Fired Fuel Burning Unit(s) Data Sheet

ATTACHMENT M – SMALL HEATERS AND REBOILERS NOT SUBJECT TO 40CFR60 SUBPART DC DATA SHEET

Complete this data sheet for each small heater and reboiler not subject to 40CFR60 Subpart Dc at the facility. ***The Maximum Design Heat Input (MDHI) must be less than 10 MMBTU/hr.***

Emission Unit ID#	Emission Point ID#	Emission Unit Description (Manufacturer, model#)	Year Installed/ Modified	Type and Date of Change	Maximum Design Heat Input (MMBTU/hr)	Fuel Heating Value (BTU/scf)
GPU001	EP-GPU001	Gas Production Unit Heater	2013	Existing	1	1277.7
GPU002	EP-GPU002	Gas Production Unit Heater	2013	Existing	1	1277.7
GPU003	EP-GPU003	Gas Production Unit Heater	2017	New	1	1277.7
GPU003	EP-GPU003	Gas Production Unit Heater	2014	Removal-2017	1.5	1277.7
GPU004	EP-GPU004	Gas Production Unit Heater	2014	Removal-2017	1.5	1277.7

1. Enter the appropriate Emission Unit (or Source) identification number for each fuel burning unit located at the production pad. Gas Producing Unit Burners should be designated GPU-1, GPU-2, etc. Heater Treaters should be designated HT-1, HT-2, etc. Heaters or Line Heaters should be designated LH-1, LH-2, etc. For sources, use 1S, 2S, 3S…or other appropriate designation. Enter glycol dehydration unit Reboiler Vent data on the Glycol Dehydration Unit Data Sheet.
2. Enter the appropriate Emission Point identification numbers for each fuel burning unit located at the production pad. Gas Producing Unit Burners should be designated GPU-1, GPU-2, etc. Heater Treaters should be designated HT-1, HT-2, etc. Heaters or Line Heaters should be designated LH-1, LH-2, etc. For emission points, use 1E, 2E, 3E…or other appropriate designation.
3. New, modification, removal.
4. Enter design heat input capacity in MMBtu/hr.
5. Enter the fuel heating value in BTU/standard cubic foot.

Attachment O
Tanker Truck Loading Data Sheet

ATTACHMENT O – TANKER TRUCK LOADING DATA S HEET

Complete this data sheet for each new or modified bulk liquid transfer area or loading rack at the facility. This is to be used for bulk liquid transfer operations to tanker trucks. Use extra pages if necessary.

Truck Loadout Collection Efficiencies

The following applicable capture efficiencies of a truck loadout are allowed:

- For tanker trucks passing the MACT level annual leak test – 99.2%
- For tanker trucks passing the NSPS level annual leak test – 98.7%
- For tanker trucks not passing one of the annual leak tests listed above – 70%

Compliance with this requirement shall be demonstrated by keeping records of the applicable MACT or NSPS Annual Leak Test certification for ***every*** truck and railcar loaded/unloaded. This requirement can be satisfied if the trucking company provided certification that its entire fleet was compliant. This certification must be submitted in writing to the Director of the DAQ. These additional requirements must be noted in the Registration Application.

Emission Unit ID#:	L001, L002	Emission Point ID#:	EP-L001, EP-L002	Year Installed/ Modified:	2013

Emission Unit Description: Condensate Loading, Produced Water Loading

Loading Area Data

Number of Pumps: 2 | Number of Liquids Loaded: 2 | Max number of trucks loading at one time: 2

Are Tanker trucks pressure tested for leaks at this any other location? ☑ Yes ☐ No ☐ Not Required

If Yes, Please Describe: Tank trucks are pressure tested for leaks at the location of the leak testing company. Trucks are tested using EPA Method 27-internal vapor valve test and issued certification that DOT requirements are met.

Provide description of closed vent system and any bypasses

Are any of the following truck loadout systems utilized? No

☐ Closed System to Tanker Truck passing a MACT level annual leak test?

☐ Closed System to Tanker Truck passing a NSPS level annual leak test?

☐ Closed System to Tanker Truck not passing an annual leak test and has vapor return?

Projected Maximum Operating Schedule (for rack or transfer point as a whole)

Time	Jan - Mar	Apr - Jun	Jul - Sept	Oct - Dec
Hours/day	2	2	2	2
Days/week	1	1	1	1

Bulk Liquid Data (use extra pages as necessary)

Liquid Name		Condensate	Produced Water	
Max. Daily Throughput (1000 gal/day)		2.52	4.20	
Max. Annual Throughput (1000 gal/yr)		919.80	1533.00	
Loading Method		BF	BF	
Max. Fill Rate (gal/min)		168	168	
Average Fill Time (min/loading)		50	50	
Max. Bulk Liquid Temperature (F)		72.1	72.1	
True Vapor Pressure		3.6	0.5	
Cargo Vessel Condition		U	U	
Control Equipment or Method		None	None	
Max. Collection Efficiency (%)		0	0	
Max. Control Efficiency (%)		0	0	
Max VOC Emission Rate	Loading (lb/hr)	16.5251	0.0011	
	Annual (ton/yr)	0.7540	0.0001	
Max HAP Emission Rate	Loading (lb/hr)	1.7309	1.78E-05	
	Annual (ton/yr)	0.0790	1.35E-06	
Estimation Method		Promax	Promax	

1 BF Bottom Fill SP Splash Fill SUB Submerged Fill

2 At maximum bulk liquid temperature

3 B Ballasted Vessel C Cleaned U Uncleaned (dedicated servi O Other (describe)

4 List as many as apply (complete and submit appropriate Air Pollution Control Device Sheets)

CA Carbon Adsorption VB Dedicated Vapor Balance (closed system)

ECD Enclosed Combustion Device F Flare

TO Thermal Oxidization or Incineration

5 EPA EPA Emission Factor in AP-42 MB Material Balance

TM Test Measurement based upon test data submittal O Other (describe)

Attachment S
Air Pollution Control Device – Emission Reduction Device Sheets

ATTACHMENT S – AIR POLLUTION CONTROL DEVICE / EMISSION REDUCTION DEVICE SHEETS

Complete the applicable air pollution control device sheet s for each flare, vapor combustor, thermal oxidizer, condenser, adsorption system, vapor recovery unit , BTEX Eliminator, Reboiler with and without Glow Plug, etc. at the facility. Use extra pages if necessary.

Emissions calculations must be performed using the most conservative control device efficiency.

The following five (5) rows are only to be completed if registering an alternative air pollution control device.

Emission Unit ID:	NA	Make/Model:	NA
Primary Control Device ID:	NA	Make/Model	NA
Control Efficiency (%):	NA	APCD/ERD Data Sheet Completed	☐ Yes ☐ No
Secondary Control Device ID:	NA	Make/Model	NA
Control Efficiency (%):	NA	APCD/ERD Data Sheet Completed	☐ Yes ☐ No

VAPOR COMBUSTION (Including Enclosed Combustors)

General Information

Control Device ID#:	EC001-003	Installation Date: ☑ New ☐ Modified ☐ Relocated	
Maximum Rated Total Flow Capacity	5458 scfh 131000 scfd	Maximum Design Heating Input (from mfg. spec sheet)	12.0 MMBTU/hr
Design Heat Content	2300 BTU/scf		

Control Device Information

Type of Vapor Combustion Control?

☑ Enclosed Combustion Device ☐ Elevated Flare ☐ Ground Flare
☐ Thermal Oxidizer

Manufacturer: Cimarron Model: 48" HV ECD		Hours of operation per year?	8760

List the emission units whose emissions are controlled by this vapor control device (Emission Point ID# NA

Emission Unit ID#	Emission Source Description	Emission Unit ID#	Emission Source Description
TANKCOND001-002	Condensate Tanks		
TANKPW001-002	Produced Water Tanks		

If this vapor combustor controls emissions from more than six (6) emission units, please attach additional pages.

Assist Type (Flares only)	Flare height	Tip Diameter	Was the design per §60.18?
☐ Steam ☐ Air ☐ Pressure ☑ Non	25 feet	3.33 feet	☑ Yes ☐ No Provide determination

Waste Gas Information

Maximum Waste Gas Flow Rate	Heat Value of Waste Gas Stream	Exit Velocity of the Emission Stream
6.80 (scfm)	2,172.56 BTU/ft^3	0.0130 (ft/s)

Please see Attachment S, Tables 6 & 7 for VOC composition/ characteristics of the waste gas stream to be burned.

Pilot Gas Information

Number of Pilot Lights	Fuel Flow Rate to Pilot Flame per Pilot	Heat Input per Pilot	Will automatic re-ignition be used?
1	17 scfh	21721 BTU/hr	☑ Yes ☐ No

If automatic re-ignition is used, please describe the method. Flame Rectification, a thermocouple equivalent

Is pilot flame equipped with a monitor to detect the presence of the flame?	If Yes, What type?
☑ Yes ☐ No	☐ Thermocouple ☐ Infrared ☐ Ultraviolet ☐ Camera ☑ Other: Flame Ionization Rod

Describe all operating ranges and maintenance procedures required by the manufacturer to maintain the warranty. *(If unavailable, please indicate).*

Additional information attached? ☑ Yes ☐ No Manufacturer's specs sheet

Please attach copies of manufacturer's data sheets, drawings, flame demonstration per §60.18 or §63.11 (b) and performance testing.

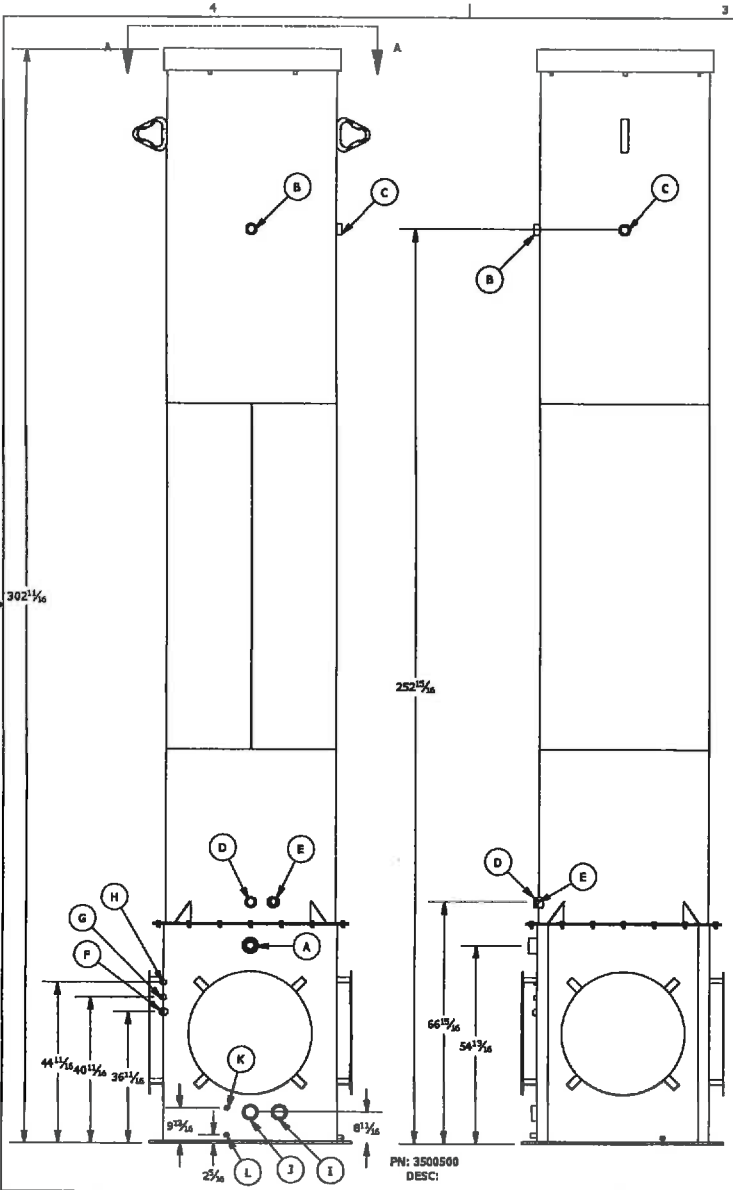

48" DIA x 302 5/8" HEIGHT, 88 ORIFICES EMISSION CONTROL DEVICE

* >98% TVOC DRE, CERTIFIED USEPA 40 CFR 60, APPENDIX A, SOURCE EMMISIONS TEST METHODS REFERENCED. MEETS ALL EPA & CDPHE REGULATIONS.
* DESTROYS OIL/CONDENSATE PRODUCTION TANK VAPORS W/ NO VISIBLE FLAME.
* EXCELLENT OPACITY AND SMOKELESS OPERATION.
* RELIABLE AND CUSTOMIZABLE IGNITION.
* VERY LOW CAPITAL AND OPERATING COST.
* EASY TO OPERATE AND MAINTAIN.
* FIELD TESTED TO DESTROY UP TO 119.5 MDSCFD (131 MCFD) @ 10 oz/in^2; 2300 BTU/CF WASTE GAS (SG 1.45)
* STRUCTURE CERTIFIED FOR 90 MPH 3-SEC WIND GUST PER ASCE 7-05 & IBC 2006 STANDARDS. HIGHER WIND LOAD RATED STRUCTURES AVAILABLE.

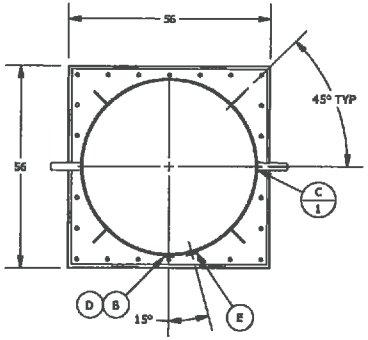

VIEW A-A

PN: 3500500
DESC:

SCHEDULE OF NOZZLES				
MARK	QTY	DESCRIPTION	SERIES	SERVICE
A	1	3" HALF COUPLING	2000#	BURNER WASTE GAS IN
B	1	2" FULL COUPLING	3000#	FLOW TEST/AUTOMATION
C	1	2" FULL COUPLING	3000#	FLOW TEST/AUTOMATION
D	1	2" FULL COUPLING	3000#	SIGHT GLASS
E	1	2" FULL COUPLING	3000#	MANUAL LIGHTING
F	1	1" FULL COUPLING	3000#	PILOT GAS IN
G	1	1/2" FULL COUPLING	3000#	IGNITOR CABLE
H	1	1/2" FULL COUPLING	3000#	AUTOMATION
I	1	3" HALF COUPLING	3000#	DRIP TANK WASTE GAS IN
J	1	3" HALF COUPLING	3000#	DRIP TANK WASTE GAS OUT
K	1	1/2" FULL COUPLING	3000#	AUTOMATION
L	1	1/2" FULL COUPLING	3000#	LIQUID DRAIN

UNLESS OTHERWISE SPECIFIED

1. REMOVE ALL BURRS AND SHARP CORNERS.
2. COR. RAD .03
3. DO NOT SCALE DRAWING.
4. ALL DIMENSIONS ARE IN INCHES.
5. MACHINE FIN.
6. FABRICATION
   .X = ± 0.25
   .XX = ± 0.125
   .XXX = ± 0.06
   ANGLES ± 3°
7. MACHINE
   .X = ±0.030
   .XX = ±0.015
   .XXX = ±0.005
   ANGLES ±1/2°
   CONTRICITY WITHIN 0.010 TIR

APPROVED FOR A.S.M.E CODE, SECTION VIII DIV 1
_____ED,_____ ADDENDA BY_____ DATE_____

CIMARRON
Energy Inc.

TITLE:
48" HIGH VOLUME ECD

DATE:	WO No.:	SHEET: 1 OF 1

DRAWN BY: TDS | REV. | DRAW NO.: 3500500

Attachment T
Emissions Calculations

Table 1

Facility Information
John Campbell North Well Pad
Ritchie County, West Virginia
Antero Resources Corporation

Oil and Gas Site General Information

Administrative Information	
Company Name	Antero Resources Corporation
Facility/Well Name	John Campbell North Well Pad
Nearest City/Town	Pullman
API Number/SIC Code	1311
Latitude/Longitude	39.18087, -80.93011
County	Ritchie County

Technical Information	
Max Condensate Site Throughput (bbl/day):	60
Max Produced Water Site Throughput (bbl/day):	100
Are there any sour gas streams at this site?	No
Is this site currently operational/producing?	Yes

Equipment/Processes at Site	
Equipment/Process Types	**How many for this site?**
Fugitives	3
Gas Production Unit Heaters	3
Condensate Tanks	2
Produced Water Tanks	2
Loading Jobs	2
Enclosed Combustors	1

Table 2

Uncontrolled/Controlled Emissions Summary
John Campbell North Well Pad
Ritchie County, West Virginia
Antero Resources Corporation

Emission Source	VOC		NO_x		CH_4		CO_{2e}		CO		SO_2		$PM_{2.5}$		PM_{10}		Lead		Total HAPs		Benzene		Xylenes		Formaldehyde	
	(lbs/hr)	(ton/yr)	(lbs/hr)	(ton/yr)	(lbs/hr)	(ton/yr)	(lbs/hr)	(ton/yr)	(lbs/hr)	(ton/yr)	(lbs/hr)	(ton/yr)	(lbs/hr)	(ton/yr)	(lbs/hr)	(ton/yr)	(lbs/hr)	(ton/yr)	(lbs/hr)	(ton/yr)	(lbs/hr)	(ton/yr)	(lbs/hr)	(ton/yr)	(lbs/hr)	(ton/yr)
UNCONTROLLED (Fugitives, Storage Tanks, Gas Production Unit Heaters)																										
Fugitive Emissions (Component Count, PCV and Hauling)[1]	1.1446	5.0134			1.0775	4.7194	26.937	117.99							0.2749	0.0201			0.1060	0.4643	0.0013	0.0057	1.30E-02	5.67E-02		
Flashing, Working and Breathing (F/W/B) Losses[2]	32.8338	143.8119			4.9764	21.7965	124.4917	545.2735											3.8312	16.7807	0.0196	0.0858	0.0311	0.1364		
Gas Production Unit Heater Emissions[3]	0.0129	0.0566	0.2348	1.0284	0.0054	0.0237	281.76	1,234.09	0.1972	0.8639	0.0014	0.0062	0.0178	0.0782	0.0178	0.0782	1.17E-06	5.14E-06	0.004	0.019	4.93E-06	2.16E-05			0.0002	0.0008
TOTALS:	**33.9913**	**148.8819**	**0.2348**	**1.0284**	**6.0592**	**26.5395**	**433.1854**	**1897.3520**	**0.1972**	**0.8639**	**0.0014**	**0.0062**	**0.0178**	**0.0782**	**0.2927**	**0.0983**	**1.17E-06**	**5.14E-06**	**3.9416**	**17.2643**	**0.0209**	**0.0916**	**0.0441**	**0.1932**	**0.0002**	**0.0008**
UNCONTROLLED (Truck Loading Emissions)																										
Truck Loading Emissions[4]	16.5262	0.7540			0.6426	0.0304	16.1351	0.7654											1.7309	0.0790	0.0058	2.65E-04	0.0109	0.0005		
CONTROLLED EMISSIONS																										
Enclosed Combustor Emissions (from F/W/B losses)[5]	0.6568	2.8766	0.8177	3.5815	0.0916	0.4013	128.6411	563.4479	3.7214	16.2999	1.02E-05	0.0000	0.0024	0.0106	0.0032	0.0141	2.13E-07	9.31E-07	0.0767	0.3357	0.0004	0.0017	0.0006	0.0027	1.28E-06	5.58E-06
TOTALS:	**0.657**	**2.877**	**0.818**	**3.582**	**0.092**	**0.401**	**128.641**	**563.448**	**3.721**	**16.300**	**1.02E-05**	**4.47E-05**	**0.002**	**0.011**	**0.141**	**0.024**	**2.13E-07**	**9.31E-07**	**0.077**	**0.336**	**3.92E-04**	**1.72E-03**	**6.23E-04**	**0.003**	**1.28E-06**	**5.58E-06**
POTENTIAL TO EMIT[6]	**1.8143**	**8.7007**	**1.0525**	**4.6099**	**1.1745**	**5.1748**	**437.3348**	**1916.2918**	**3.9187**	**17.1637**	**0.0014**	**0.0062**	**0.0203**	**0.0888**	**0.1585**	**0.1024**	**1.39E-06**	**6.07E-06**	**0.1871**	**0.8984**	**0.0017**	**0.0077**	**0.0136**	**0.0600**	**0.0002**	**0.0008**
POTENTIAL TO EMIT (Excluding Fugitives)	**0.6697**	**3.6873**	**1.0525**	**4.6099**	**0.0970**	**0.4554**	**410.3974**	**1798.3058**	**3.9187**	**17.1637**	**0.0014**	**0.0062**	**0.0203**	**0.0888**	**0.0211**	**0.0923**	**1.39E-06**	**6.07E-06**	**0.0811**	**0.4341**	**0.0004**	**0.0020**	**0.0006**	**0.0032**	**0.0002**	**0.0008**

Enter any notes here:	1 - See Tables 4 and 5 for fugitive emission calculations; Table 12 for PM emissions from hauling. 2 - See Tables 6 and 7 for tanks emission calculations 3 - See Table 9 for gas production unit heater emission calculations 4 - The maximum emission was calculated based on tank truck capacity of 200 barrels and actual fill rate of 50 minutes per tank truck. At a production rate of 60 barrels per day, VOC emissions would be 16.5262 pounds per hour when there are truck loading activities. Average hourly VOC emissions from truck loading is 0.1722 pound per hour. 5- See Table 10 and 11 for enclosed combustion emission calculations. 6 - The hourly potential to emit is the sum of emissions from gas production unit heaters, storage tanks, enclosed combustors, and fugitives. Does not include emissions from loading (see footnote 5). The total TPY PTE is the sum of all emissions. PM 10 TPY is the sum of uncontrolled hauling and other PM10 sources.

Table 3

Permits Summary
John Campbell North Well Pad
Ritchie County, West Virginia
Antero Resources Corporation

Pollutant		Emissions		Threshold Exceeded?		
		Uncontrolled	Controlled	Threshold	Uncontrolled	Controlled
VOC	lbs/hr	33.9913	1.8143	6	**Yes**	
	tons/yr	149.6360	8.7007	10	**Yes**	
NO_X	lbs/hr	0.2348	1.0525	6		
	tons/yr	1.0284	4.6099	10		
CH_4	lbs/hr	6.0592	1.1745			
	tons/yr	26.5699	5.1748			
CO	lbs/hr	0.1972	3.9187	6		
	tons/yr	0.8639	17.1637	10		**Yes**
SO_2	lbs/hr	0.0014	0.0014	6		
	tons/yr	0.0062	0.0062	10		
$PM_{2.5}$	lbs/hr	0.0178	0.0203	6		
	tons/yr	0.0782	0.0888	10		
PM_{10}	lbs/hr	0.2927	0.1585	6		
	tons/yr	0.0983	0.1024	10		
Lead	lbs/hr	1.17E-06	1.39E-06	6		
	tons/yr	5.14E-06	6.07E-06	10		
Total HAPs	lbs/hr	3.9416	0.1871	2	**Yes**	
	tons/yr	17.3433	0.8984	5	**Yes**	
Total TAPs	lbs/hr	0.0211	0.0019	1.14		
n-Hexane	lbs/hr	3.8164	0.1610			
	tons/yr	16.7935	0.7826			
Toluene	lbs/hr	0.0441	0.0062			
	tons/yr	0.1935	0.0276			
Ethylbenzene	lbs/hr	0.0159	0.0045			
	tons/yr	0.0700	0.0197			
Xylenes	lbs/hr	0.0441	0.0136			
	tons/yr	0.1937	0.0600			
Benzene	lbs/hr	0.0209	0.0017			
	tons/yr	0.0918	0.0077			

Enter any notes here:	1. Emissions are based on 98% Enclosed Combustor DRE operating 100% of the time. 2. Please see Attachment J - Fugitive Emissions Data Summary Sheet and Attachment T - Emission Points Summary Sheet for sitewide sources and breakdown of emission quantities.

Table 4

Fugitive Emissions
John Campbell North Well Pad
Ritchie County, West Virginia
Antero Resources Corporation

VOC Type:	Condensate VOC
Emission Type:	Steady State (continuous)

Gas Weight Fraction From Analysis:	VOC frac	0.181
	Benzene frac	0.000
	Toluene	0.000
	Ethylbenzene	0.000
	Xylenes	0.000
	n-Hexane	0.019
	HAPs	0.019
	Methane	0.619

Gas					
Number	Component	Pollutant	Emission Factor (kg/hr of THC per component)	kg/hr	lb/yr
150	Valves	Gas VOC	0.004500	0.12	2,352.99
		Non VOC	0.004500	0.55	10,655.61
		HAPs	0.004500	0.01	241.75
		CO2e	0.004500	10.45	201,370.02
177	Connectors	VOC	0.000200	0.01	123.40
		Non-VOC	0.000200	0.03	558.83
		HAPs	0.000200	0.00	12.68
		CO2e	0.000200	0.55	10,560.74
39	Flanges	VOC	0.000390	0.00	53.02
		Non-VOC	0.000390	0.01	240.11
		HAPs	0.000390	0.00	5.45
		CO2e	0.000390	0.235447	4537.537844
			Total VOCs:	0.13	2529.41
			Total THC:	0.73	13983.96
			Total CH4:	0.45	8658.73

Light Liquid Weight Fraction From Analysis:	VOC frac	0.969
	Benzene frac	0.002
	Toluene	0.006
	Ethylbenzene	0.005
	Xylenes	0.015
	n-hexane	0.058
	HAPs	0.086
	Methane	0.008

Light Liquid					
Number	Component	Pollutant	Emission Factor (kg/hr of THC per component)	kg/hr	lb/yr
156	Valves	Light Liquid VOC	0.002500	0.38	7,286.63
		Light Liquid Non-VOC	0.002500	0.01	229.45
		Light Liquid HAPs	0.002500	0.03	647.09
		CO2e	0.002500	0.08	1455.92
			Total VOC:	0.38	7,286.63
			Total THC:	0.39	7,516.08
			Total CH4:	0.00	58.24

Fugitive Total Emissions			
	Annual Emissions (lb/yr)	Annual Emissions (lb/hr)	Annual Emissions (tpy)
VOC	9,816.04	1.12	4.91
Ethylbenzene		0.00	0.02
Toluene		0.01	0.02
Xylenes		0.01	0.06
n-Hexane		0.08	0.35
TAPs (Benzene)		0.00	0.01
HAPs		0.10	0.45
CH_4 [3]		1.00	4.36
CO_{2e}	217,924.22	24.88	108.96

Enter Notes Here:	Fugitive emissions based on an estimated component count Global Warming Potentials from EPA site Reference to Emission factors used: 1. Emission factors are for oil and gas production facilities (not refineries) come from the EPA's "Protocol for Equipment Leak Emission Estimates" November 1995, EPA 4531, R-95-017, Table 2-4. 2. Percent of speciated VOCs used in fugitive calculations are based on the total hydrocarbons, not of the total sample. 3. CH_4 emissions are based on percent of CH4 of the total hydrocarbons

Table 5

Pneumatic Control Valve Emissions
John Campbell North Well Pad
Ritchie County, West Virginia
Antero Resources Corporation

Number of PCVs	9
Bleed Rate (scf/day/PCV)	6.6
Total Bleed Rate (scf/day)	59.4

Component	Mol%	Molecular Weight (lb/lb-mole)	Component Flow (scf/day)	Component Moles (lb-moles)	Component Emissions (lbs/day)	(lbs/hr)	(tons/year)
H2S	0.00E+00	34.08	0.00E+00	0.00E+00	0.00E+00	0.00E+00	0.00E+00
Nitrogen	0.491	14.01	0.291654	7.69E-04	0.01	4.49E-04	0.00
Carbon Dioxide	0.154	44.01	0.091476	2.41E-04	0.01	4.42E-04	1.94E-03
Methane	78.758	16.04	46.782252	0.12	1.98	0.08	0.36
Ethane	13.565	30.07	8.05761	0.02	0.64	0.03	0.12
Propane	4.301	44.1	2.554794	0.01	0.30	0.01	0.05
Isobutane	0.571	58.12	0.339174	8.94E-04	0.05	0.00	0.01
n-Butane	1.128	58.12	0.670032	1.77E-03	0.10	0.00	0.02
Isopentane	0.3	72.15	0.1782	4.70E-04	0.03	1.41E-03	0.01
n-Pentane	0.292	72.15	0.173448	4.57E-04	0.03	1.37E-03	0.01
2-Methylpentane	0.00E+00	86.18	0.00E+00	0.00E+00	0.00E+00	0.00E+00	0.00E+00
3-Methylpentane	0.00E+00	86.18	0.00E+00	0.00E+00	0.00E+00	0.00E+00	0.00E+00
n-Hexane	0.44	86.18	0.26136	6.89E-04	0.06	0.00	0.01
Methylcyclopentane	0.00E+00	84.16	0.00E+00	0.00E+00	0.00E+00	0.00E+00	0.00E+00
Benzene	0.00E+00	78.11	0.00E+00	0.00E+00	0.00E+00	0.00E+00	0.00E+00
2-Methylhexane	0.00E+00	100.2	0.00E+00	0.00E+00	0.00E+00	0.00E+00	0.00E+00
3-Methylhexane	0.00E+00	100.2	0.00E+00	0.00E+00	0.00E+00	0.00E+00	0.00E+00
Heptane	0.00E+00	100.21	0.00E+00	0.00E+00	0.00E+00	0.00E+00	0.00E+00
Methylcyclohexane	0.00E+00	98.186	0.00E+00	0.00E+00	0.00E+00	0.00E+00	0.00E+00
Toluene	0.00E+00	92.14	0.00E+00	0.00E+00	0.00E+00	0.00E+00	0.00E+00
Octane	0.00E+00	114.23	0.00E+00	0.00E+00	0.00E+00	0.00E+00	0.00E+00
Ethylbenzene	0.00E+00	106.17	0.00E+00	0.00E+00	0.00E+00	0.00E+00	0.00E+00
m & p-Xylene	0.00E+00	106.16	0.00E+00	0.00E+00	0.00E+00	0.00E+00	0.00E+00
o-Xylene	0.00E+00	106.16	0.00E+00	0.00E+00	0.00E+00	0.00E+00	0.00E+00
Nonane	0.00E+00	128.2	0.00E+00	0.00E+00	0.00E+00	0.00E+00	0.00E+00
C10+	0.00E+00	174.28	0.00E+00	0.00E+00	0.00E+00	0.00E+00	0.00E+00

	lb/hr	tpy
VOC Emissions	0.0241	0.1054
Benzene Emissions	0.00E+00	0.00E+00
Toluene Emissions	0.00E+00	0.00E+00
Ethylbenzene Emissions	0.00E+00	0.00E+00
Xylene Emissions	0.00E+00	0.00E+00
n-Hexane Emissions	0.0025	0.0108
HAPs Emissions	0.0025	0.0108
TAPs Emissions	0.00E+00	0.00E+00
CH_4 Emissions	0.0824	0.3609
CO_{2e} emissions	2.0602	9.0239

Enter any notes here:	1. PCV bleed rate obtained from the user manual for PCV http://issuu.com/rmcprocesscontrols/docs/mizer-pilot-operation--parts---installation-manual 2. Emissions per hour= Mol % x no. of PCV x bleed rate x MW / 379.48 / 24

Table 6

Uncontrolled Flashing Emissions
John Campbell North Well Pad
Ritchie County, West Virginia
Antero Resources Corporation

# Hours Operational	8760

	Condensate Tank Flashing Losses			Produced Water Tank Flashing Losses		
	Vapor Mass Fraction	Flashing Losses		Vapor Mass Fraction	Flashing Losses	
	wt%	lbs/hr	tpy	wt%	lbs/hr	tpy
Water	0.1592	0.0699	0.3060	2.6281	0.0131	0.0572
H2S	0.0000	0.0000	0.0000	0.0000	0.0000	0.0000
Nitrogen	0.0385	0.0169	0.0741	0.3207	0.0016	0.0070
Carbon Dioxide	0.1509	0.0662	0.2902	2.4791	0.0123	0.0540
Methane	10.5632	4.6361	20.3063	56.0713	0.2787	1.2206
Ethane	18.2032	7.9893	34.9933	25.0402	0.1245	0.5451
Propane	22.9264	10.0623	44.0730	8.1960	0.0407	0.1784
Isobutane	6.6905	2.9364	12.8616	1.0410	0.0052	0.0227
n-Butane	15.4754	6.7921	29.7493	2.5913	0.0129	0.0564
Isopentane	6.5083	2.8565	12.5113	0.6336	0.0031	0.0138
n-Pentane	6.7886	2.9795	13.0501	0.2486	0.0012	0.0054
2-Methylpentane	0.8152	0.3578	1.5671	0.0380	0.0002	0.0008
3-Methylpentane	0.5005	0.2196	0.9621	0.0557	0.0003	0.0012
n-Hexane	8.1089	3.5590	15.5883	0.1829	0.0009	0.0040
Methylcyclopentane	0.2441	0.1072	0.4693	0.0434	0.0002	0.0009
Benzene	0.0426	0.0187	0.0818	0.0654	0.0003	0.0014
2-Methylhexane	0.4082	0.1792	0.7848	0.0132	0.0001	0.0003
3-Methylhexane	0.3153	0.1384	0.6062	0.0122	0.0001	0.0003
Heptane	0.7198	0.3159	1.3837	0.0118	0.0001	0.0003
Methylcyclohexane	0.4474	0.1964	0.8601	0.0766	0.0004	0.0017
Toluene	0.0840	0.0369	0.1616	0.1195	0.0006	0.0026
Octane	0.5856	0.2570	1.1257	0.0039	0.0000	0.0001
Ethylbenzene	0.0254	0.0112	0.0489	0.0353	0.0002	0.0008
m & p-Xylene	0.0346	0.0152	0.0664	0.0437	0.0002	0.0010
o-Xylene	0.0329	0.0144	0.0632	0.0472	0.0002	0.0010
Nonane	0.1273	0.0559	0.2448	0.0009	0.0000	0.0000
C10+	0.0039	0.0017	0.0074	0.0005	0.0000	0.0000
Total VOCs	70.885	31.11	136.3	13.461	0.0669	0.2930
Total CO_{2e}		115.97	507.9		6.98	30.6
CH_4		4.64	20.31		0.28	1.22
Total TAPs (Benzene)		0.0187	0.0818		0.0003	0.0014
Toluene		0.0369	0.1616		0.0006	0.0026
Ethylbenzene		0.0112	0.0489		0.0002	0.0008
Xylenes		0.0296	0.1297		0.0005	0.0020
n-Hexane		3.559	15.588		0.0009	0.0040
Total HAPs		3.655	16.010		0.0025	0.0108
Total	100.00	43.89	192.2	100.00	0.497	2.18

Enter any notes here:	Vapor mass fractions and Flashing losses from Promax output

Table 7

Uncontrolled Working and Breathing Losses
John Campbell North Well Pad
Ritchie County, West Virginia
Antero Resources Corporation

Condensate Tank Information	
Number of Tanks	2
Maximum Working Losses (lbs/hr)	1.1550
Maximum Breathing Losses (lbs/hr)	1.1244
# Hours Operational	8760

	Condensate Tank W/B Losses						
	Vapor Mass Fraction	Working Losses		Breathing Losses		Max W/B Losses	
	wt%	lbs/hr	tpy	lbs/hr	tpy	lbs/hr	tpy
H2S	0.00E+00	0.00E+00	0.00E+00	0.00E+00	0.00E+00	0.00E+00	0.00E+00
Nitrogen	0.0019	2.24E-05	9.83E-05	0.0000	0.0001	0.0000	0.0002
Carbon Dioxide	0.1380	0.0016	0.0070	0.0016	0.0068	0.0031	0.0138
Methane	2.6627	0.0308	0.1347	0.0299	0.1311	0.0607	0.2658
Ethane	24.5584	0.2836	1.2423	0.2761	1.2095	0.5598	2.4518
Propane	25.6046	0.2957	1.2953	0.2879	1.2610	0.5836	2.5562
Isobutane	7.0116	0.0810	0.3547	0.0788	0.3453	0.1598	0.7000
n-Butane	16.2505	0.1877	0.8221	0.1827	0.8003	0.3704	1.6224
Isopentane	6.3174	0.0730	0.3196	0.0710	0.3111	0.1440	0.6307
n-Pentane	6.4863	0.0749	0.3281	0.0729	0.3194	0.1478	0.6476
2-Methylpentane	0.7346	0.0085	0.0372	0.0083	0.0362	0.0167	0.0733
3-Methylpentane	0.4499	0.0052	0.0228	0.0051	0.0222	0.0103	0.0449
n-Hexane	7.4665	0.0862	0.3777	0.0840	0.3677	0.1702	0.7454
Methylcyclopentane	0.1990	0.0023	0.0101	0.0022	0.0098	0.0045	0.0199
Benzene	0.0255	2.94E-04	0.0013	0.0003	0.0013	0.0006	0.0025
2-Methylhexane	0.0997	1.15E-03	0.0050	0.0011	0.0049	0.0023	0.0100
3-Methylhexane	0.2809	0.0032	0.0142	0.0032	0.0138	0.0064	0.0280
Heptane	0.6115	0.0071	0.0309	0.0069	0.0301	0.0139	0.0610
Methylcyclohexane	0.3839	0.0044	0.0194	0.0043	0.0189	0.0088	0.0383
Toluene	0.0518	5.98E-04	2.62E-03	0.0006	0.0026	0.0012	0.0052
Octane	0.4945	0.0057	0.0250	0.0056	0.0244	0.0113	0.0494
Ethylbenzene	0.0168	1.94E-04	8.51E-04	0.0002	0.0008	0.0004	0.0017
m & p-Xylene	0.0298	3.44E-04	1.51E-03	0.0003	0.0015	0.0007	0.0030
o-Xylene	0.0181	2.09E-04	0.0009	0.0002	0.0009	0.0004	0.0018
Nonane	0.1040	0.0012	0.0053	0.0012	0.0051	0.0024	0.0104
C10+	0.0019	2.22E-05	0.0001	0.0000	0.0001	0.0000	0.0002
Total VOCs	72.639	0.8389	3.675	0.8167	3.5773	1.6557	7.252
Total CO_{2e}		0.7704	3.3745	0.7500	3.2852	1.5205	6.660
CH_4		0.0308	0.1347	0.0299	0.1311	0.0607	0.2658
Total TAPs (Benzene)		2.94E-04	1.29E-03	0.0003	0.0013	0.0006	0.0025
Toluene		5.98E-04	2.62E-03	0.0006	0.0026	0.0012	0.0052
Ethylbenzene		1.94E-04	8.51E-04	0.0002	0.0008	0.0004	0.0017
Xylenes		5.53E-04	0.0024	0.0005	0.0024	0.0011	0.0048
n-Hexane		0.0862	0.3777	0.0840	0.3677	0.1702	0.7454
Total HAPs		0.0879	0.3849	0.0855	0.3747	0.1734	0.7596
Total	100.00	1.1550	5.0587	1.1244	4.9248	2.2793	9.984

Table 7

Uncontrolled Working and Breathing Losses
John Campbell North Well Pad
Ritchie County, West Virginia
Antero Resources Corporation

Produced Water Tank Information	
Number of Tanks	2
Maximum Working Losses (lbs/hr)	0.0191
Maximum Breathing Losses (lbs/hr)	0.0083

	Produced Water Tank W/B Losses						
	Vapor Mass Fraction	Working Losses		Breathing Losses		Max W/B Losses	
	wt%	lbs/hr	tpy	lbs/hr	tpy	lbs/hr	tpy
Water	91.8237	0.0176	0.0769	0.0076	0.0334	0.0252	0.1103
H2S	0.00E+00	0.00E+00	0.00E+00	0.00E+00	0.00E+00	0.00E+00	0.00E+00
Nitrogen	0.0064	1.22E-06	5.36E-06	5.31E-07	2.33E-06	1.76E-06	7.69E-06
Carbon Dioxide	3.3214	0.0006	0.0028	0.0003	0.0012	0.0009	0.0040
Methane	3.1141	0.0006	0.0026	0.0003	0.0011	0.0009	0.0037
Ethane	1.6403	0.0003	0.0014	0.0001	0.0006	0.0004	0.0020
Propane	0.0836	1.60E-05	0.0001	6.94E-06	3.04E-05	2.29E-05	0.0001
Isobutane	0.0027	5.09E-07	2.23E-06	2.21E-07	9.66E-07	7.29E-07	3.19E-06
n-Butane	0.0060	1.14E-06	4.99E-06	4.95E-07	2.17E-06	1.63E-06	7.16E-06
Isopentane	0.0004	7.21E-08	3.16E-07	3.13E-08	1.37E-07	1.03E-07	4.53E-07
n-Pentane	0.0000	8.33E-09	3.65E-08	3.61E-09	1.58E-08	1.19E-08	5.23E-08
2-Methylpentane	3.66E-06	7.00E-10	3.07E-09	3.04E-10	1.33E-09	1.00E-09	4.40E-09
3-Methylpentane	1.19E-05	2.28E-09	9.97E-09	9.87E-10	4.32E-09	3.26E-09	1.43E-08
n-Hexane	6.19E-06	1.18E-09	5.19E-09	5.14E-10	2.25E-09	1.70E-09	7.44E-09
Methylcyclopentane	1.11E-05	2.12E-09	9.29E-09	9.20E-10	4.03E-09	3.04E-09	1.33E-08
Benzene	9.92E-04	1.90E-07	8.30E-07	8.22E-08	3.60E-07	2.72E-07	1.19E-06
2-Methylhexane	7.35E-08	1.40E-11	6.15E-11	6.09E-12	2.67E-11	2.01E-11	8.82E-11
3-Methylhexane	2.67E-07	5.11E-11	2.24E-10	2.22E-11	9.72E-11	7.33E-11	3.21E-10
Heptane	8.47E-08	1.62E-11	7.09E-11	7.03E-12	3.08E-11	2.32E-11	1.02E-10
Methylcyclohexane	6.27E-06	1.20E-09	5.25E-09	5.20E-10	2.28E-09	1.72E-09	7.53E-09
Toluene	3.92E-04	7.50E-08	3.29E-07	3.26E-08	1.43E-07	1.08E-07	4.71E-07
Octane	3.53E-09	6.75E-13	2.96E-12	2.93E-13	1.28E-12	9.68E-13	4.24E-12
Ethylbenzene	3.47E-05	6.63E-09	2.91E-08	2.88E-09	1.26E-08	9.51E-09	4.17E-08
m & p-Xylene	3.30E-05	6.31E-09	2.76E-08	2.74E-09	1.20E-08	9.04E-09	3.96E-08
o-Xylene	4.54E-05	8.68E-09	3.80E-08	3.77E-09	1.65E-08	1.24E-08	5.45E-08
Nonane	2.47E-10	4.73E-14	2.07E-13	2.05E-14	8.99E-14	6.78E-14	2.97E-13
C10+	6.96E-12	1.33E-15	5.83E-15	5.77E-16	2.53E-15	1.91E-15	8.36E-15
Total VOCs	0.0942	1.80E-05	0.0001	7.81E-06	3.42E-05	2.58E-05	0.0001
Total CO_{2e}		0.0155	0.0680	0.0067	0.0295	0.0223	0.0975
CH_4		0.0006	0.0026	0.0003	0.0011	0.0009	0.0037
Total TAPs (Benzene)		1.90E-07	8.30E-07	8.22E-08	3.60E-07	2.72E-07	1.19E-06
Toluene		7.50E-08	3.29E-07	3.26E-08	1.43E-07	1.08E-07	4.71E-07
Ethylbenzene		6.63E-09	2.91E-08	2.88E-09	1.26E-08	9.51E-09	4.17E-08
Xylenes		1.50E-08	6.56E-08	6.50E-09	2.85E-08	2.15E-08	9.41E-08
n-Hexane		1.18E-09	5.19E-09	5.14E-10	2.25E-09	1.70E-09	7.44E-09
Total HAPs		2.87E-07	1.26E-06	1.25E-07	5.46E-07	4.12E-07	1.81E-06
Total	100.00	0.0191	0.0837	0.0083	0.0363	0.0274	0.1201

Enter any notes here:	Vapor mass fractions, working losses and breathing losses from Promax output

Table 8

Loading Emissions
John Campbell North Well Pad
Ritchie County, West Virginia
Antero Resources Corporation

Annual Loading	Oil Truck Loading	Water Truck Loading
RVP	5.02	1.0332
Annual Average Temp (F)	72.1	72.1
S (saturation factor)	0.6	0.6
P (true vapor pressure)	3.64	0.45
M (MW of vapor)	44.10	18.44
Collection Efficiency (%)	0.00	0.00
Total Hydrocarbon Loading Loss (lb/10^3 gal)*	2.26	0.12
Maximum Throughput (gallons/hr)**	10,080	10,080
Average Throughput (gallons/yr)	919,800	1,533,000
Total Hydrocarbon Loading Emissions (lbs/hr)	22.75	1.18
Total Hydrocarbon Loading Emissions (tpy)	1.04	0.09

	Condensate Tank Loading Losses			Produced Water Tank Loading Losses		
	Vapor Mass Fraction	Loading Losses		Vapor Mass Fraction	Loading Losses	
	wt%	lbs/hr	tpy	wt%	lbs/hr	tpy
H2S	0.0000	0.00E+00	0.00E+00	0.00E+00	0.00E+00	0.00E+00
Nitrogen	0.0019	4.42E-04	2.02E-05	0.0064	7.57E-05	5.76E-06
Carbon Dioxide	0.1380	0.0314	1.43E-03	3.3214	3.93E-02	2.99E-03
Methane	2.6627	0.6058	2.76E-02	3.1141	3.68E-02	2.80E-03
Ethane	24.5584	5.5870	0.2549	1.6403	1.94E-02	1.47E-03
Propane	25.6046	5.8250	2.66E-01	0.0836	9.89E-04	7.52E-05
Isobutane	7.0116	1.5951	7.28E-02	0.0027	3.14E-05	2.39E-06
n-Butane	16.2505	3.6969	1.69E-01	0.0060	7.05E-05	5.36E-06
Isopentane	6.3174	1.4372	6.56E-02	0.0004	4.46E-06	3.39E-07
n-Pentane	6.4863	1.4756	6.73E-02	0.0000	5.15E-07	3.92E-08
2-Methylpentane	0.7346	0.1671	7.63E-03	3.66E-06	4.33E-08	3.29E-09
3-Methylpentane	0.4499	0.1023	4.67E-03	1.19E-05	1.41E-07	1.07E-08
n-Hexane	7.4665	1.6986	7.75E-02	6.19E-06	7.32E-08	5.57E-09
Methylcyclopentane	0.1990	0.0453	2.07E-03	1.11E-05	1.31E-07	9.98E-09
Benzene	0.0255	0.0058	2.64E-04	0.0010	1.17E-05	8.91E-07
2-Methylhexane	0.0997	0.0227	1.03E-03	7.35E-08	8.69E-10	6.60E-11
3-Methylhexane	0.2809	0.0639	2.92E-03	2.67E-07	3.16E-09	2.40E-10
Heptane	0.6115	0.1391	6.35E-03	8.47E-08	1.00E-09	7.62E-11
Methylcyclohexane	0.3839	0.0873	3.98E-03	6.27E-06	7.41E-08	5.63E-09
Toluene	0.0518	0.0118	5.38E-04	0.0004	4.64E-06	3.53E-07
Octane	0.4945	0.1125	5.13E-03	3.53E-09	4.17E-11	3.17E-12
Ethylbenzene	0.0168	0.0038	1.75E-04	3.47E-05	4.10E-07	3.12E-08
m & p-Xylene	0.0298	0.0068	3.09E-04	3.30E-05	3.90E-07	2.96E-08
o-Xylene	0.0181	0.0041	1.88E-04	4.54E-05	5.37E-07	4.08E-08
Nonane	0.1040	0.0236	1.08E-03	2.47E-10	2.92E-12	2.22E-13
C10+	0.0019	0.0004	1.99E-05	6.96E-12	8.23E-14	6.26E-15
Total VOCs	72.6388	16.5251	0.7540	0.0942	1.11E-03	8.47E-05
Total CH_4		0.6058	0.0276		0.0368	0.0028
Total CO_{2e}		15.1754	0.6924		0.9597	0.0730
Total TAPs (Benzene)		0.0058	2.64E-04		1.17E-05	8.91E-07
Toluene		0.0118	5.38E-04		4.64E-06	3.53E-07
Ethylbenzene		0.0038	1.75E-04		4.10E-07	3.12E-08
Xylenes		0.0109	4.97E-04		9.27E-07	7.05E-08
n-Hexane		1.6986	7.75E-02		7.32E-08	5.57E-09
Total HAPs		1.7309	7.90E-02		1.78E-05	1.35E-06
Total	100.0000	22.7497	1.0380	100.0000	1.1823	0.0899

Enter any notes here

Vapor mass fractions and loading losses from Promax output

Using equation L_L = 12.46 SPM/T from AP-42, Chapter 5, Section 5.2-4
MW was obtained by Promax; RVP was taken from laboratory reports
Annual Average Temp (F) obtained from Charleston, WV (preset in Promax)
S (saturation factor) is based on submerged loading, dedicated service as it was most representative
True vapor pressure (TVP) equation from AP-42, Chapter 7, Figure 7.1-13a

** Maximum throughput in gallons per hour obtained from actual transfer rate of 200 barrels in 50 minutes. (10,080 gal/hr = 200 bbl / 50 min x 42 gal/bbl x 60 min/hr)

Loading emissions are vented to the atmosphere.

Table 9

Gas Production Unit Heater and Line Heater Emissions
John Campbell North Well Pad
Ritchie County, West Virginia
Antero Resources Corporation

Gas Production Unit Heater Emissions

Number of Units	3
GPU Heater Rating (MMBtu/hr)	1.00
Operating hours/year	8760
Fuel Heat Value (Btu/scf)	1,277.7000

Pollutant	Emission Factors (lb/MMscf)	lb/hr	tpy
NOx	100	0.235	1.028
CO	84	0.197	0.864
CO_2	120,000	281.756	1234.093
Lead	0.0005	1.17E-06	5.14E-06
N_2O	2.2	0.005	0.023
PM (Total)	7.6	0.018	0.078
SO_2	0.6	0.001	0.006
TOC	11	0.026	0.113
Methane	2.3	0.005	0.024
VOC	5.5	0.013	0.057
HAPS			
2-Methylnaphthalene	2.40E-05	5.64E-08	2.47E-07
Benzene	2.10E-03	4.93E-06	2.16E-05
Dichlorobenzene	1.20E-03	2.82E-06	1.23E-05
Fluoranthene	3.00E-06	7.04E-09	3.09E-08
Fluorene	2.80E-06	6.57E-09	2.88E-08
Formaldehyde	7.50E-02	1.76E-04	7.71E-04
Hexane	1.80E+00	4.23E-03	1.85E-02
Naphthalene	6.10E-04	1.43E-06	6.27E-06
Phenanathrene	1.70E-05	3.99E-08	1.75E-07
Toluene	3.40E-03	7.98E-06	3.50E-05

	lb/hr	tpy
TOTAL Uncontrolled VOC	0.013	0.057
TOTAL Uncontrolled HAPs	0.004	0.019
TOTAL Uncontrolled TAPs (Benzene)	4.93E-06	2.16E-05
TOTAL Uncontrolled Toluene	7.98E-06	3.50E-05
TOTAL Uncontrolled Hexane	0.004	0.019
TOTAL Uncontrolled TAPs (Formaldehyde)	0.000	0.001
TOTAL CH_4	0.005	0.024
TOTAL CO_{2e} Emissions	283.43	1,241.43

Enter any notes here:
All Emission Factors based off AP-42 Sec 1.4 Natural Gas Combustion

Table 10

Enclosed Combustor Emissions
John Campbell North Well Pad
Ritchie County, West Virginia
Antero Resources Corporation

General Information	
Unit Name:	EC001

Pollutant	Emission Factor (lb/MMscf)
NOx	100
CO	84
PM10	7.6
PM2.5	5.7
SO_2	0.6
CO_2	120,000
VOC	5.5
benzene	2.10E-03
Hexane	1.80E+00
Toluene	3.40E-03
Formaldehyde	7.50E-02
N_2O	2.20
Lead	5.00E-04

Pollutant	Emission Factor[2] (lb/MMBtu)
NO_x	0.068
CO	0.31

Constants	
Btu/MMBtu	1,000,000
scf/MMscf	1,000,000
lb/ton	2,000
H_2S molecular wei	34.08
SO_2 molecular	64.06
seconds/hour	3,600
inches/ft	12

Destruction Efficiency	
VOC percent destruction efficiency (%)	98
H_2S percent destruction efficiency (%)	98

Enclosed Combustor operating hours	8760
No. of Enclosed Combustors	1
Maximum Design Heat Input Per Enclosed Combustor (MMBtu/hr)	12

Stream Information							
	1	2	3	4	5	6	Total
Stream Sent to Enclosed/Vapor Combustor (Enter Name of Each Stream Here)	pilot(s)	added fuel stream(s)	Oil Tank Flash Emissions	Water Tank Flash Emissions	Oil Tank W/B Emissions	Water Tank W/B Emissions	-
Maximum Expected Hourly Volumetric Flow Rate of Stream (scf/hr)	17	--	377.66	10.23	19.61	0.56	425.06
Maximum Expected Annual Volumetric Flow Rate of Stream (scf/yr)	148,920.00	--	3,308,282.24	89,604.47	171,810.80	4,942.35	3,723,559.86
Heating Content (Btu/ft3)	1,278		2,282.27	1,199.60	2,510.14	102.22	2,172.56

Mass Flow Rates of the Vapors Sent to this Control Device, Hourly Basis (lb/hr)							
	1	2	3	4	5	6	Total
Stream Sent to Enclosed Combustor/Vapor Combustor	pilot(s)	added fuel stream(s)	Oil Tank Flash Emissions	Water Tank Flash Emissions	Oil Tank W/B Emissions	Water Tank W/B Emissions	-
H2S	-	-	0.000	0.000	0.000	0.000	0.000
Total VOC	-	-	31.111	0.067	1.656	0.000	32.83
Benzene	-	-	0.019	0.000	0.001	0.000	0.020
Toluene	-	-	0.037	0.001	0.001	0.000	0.039
Ethylbenzene	-	-	0.011	0.000	0.000	0.000	0.012
Xylenes	-	-	0.030	0.000	0.001	0.000	0.031
n-Hexane	-	-	3.559	0.001	0.170	0.000	3.730
HAPs	-	-	3.655	0.002	0.173	0.000	3.831
Total Mass Flow	-	-	43.890	0.497	2.279	0.027	46.693
Mass Flow Rates of the Vapors Sent to this Control Device, Annual Basis (tpy)							
H2S	-	-	0.000	0.000	0.000	0.000	0.000
Total VOC	-	-	136.267	0.293	7.252	0.000	143.812
Benzene	-	-	0.082	0.001	0.003	0.000	0.086
Toluene	-	-	0.162	0.003	0.005	0.000	0.169
Ethylbenzene	-	-	0.049	0.001	0.002	0.000	0.051
Xylenes	-	-	0.130	0.002	0.005	0.000	0.136
n-Hexane	-	-	15.588	0.004	0.745	0.000	16.338
HAP	-	-	16.010	0.011	0.760	0.000	16.781
Total Mass Flow	-	-	192.237	2.177	9.984	0.120	204.517

Table 10

Enclosed Combustor Emissions
John Campbell North Well Pad
Ritchie County, West Virginia
Antero Resources Corporation

Controlled Emissions							
Hourly (lb/hr)							
	1	2	3	4	5	6	Total
Stream Sent to Enclosed Combustor/Vapor Combustor	pilot(s)	added fuel stream(s)	Oil Tank Flash Emissions	Water Tank Flash Emissions	Oil Tank W/B Emissions	Water Tank W/B Emissions	-
NOx	0.002	-	0.816				0.82
CO	0.001	-	3.720				3.72
PM2.5	0.000	-	0.002	0.000	0.000	0.000	0.00
PM10	0.000	-	0.003	0.000	0.000	0.000	0.00
H2S	0.000	-	0.000	0.000	0.000	0.000	0.00
SO_2	0.000	-	0.000	0.000	0.000	0.000	0.00
CO_2	2.040	-	-	-	-	-	2.04
Total VOC	0.000	-	0.622	0.001	0.033	0.000	0.66
Benzene	0.000	-	0.000	0.000	0.000	0.000	0.00
Toluene	0.000	-	0.001	0.000	0.000	0.000	0.00
Ethylbenzene	0.000	-	0.000	0.000	0.000	0.000	0.00
Xylenes	0.000	-	0.001	0.000	0.000	0.000	0.00
n-Hexane	0.000	-	0.071	0.000	0.003	0.000	0.07
HAP	0.000	-	0.073	0.000	0.003	0.000	0.08
N_2O	0.000	-	0.001	0.000	0.000	0.000	0.00
Lead	0.000	-	0.000	0.000	0.000	0.000	0.00
Formaldehyde	0.000	-	-	-	-	-	0.00
Annual (tpy)							
	1	2	3	4	5	6	Total
Stream Sent to Enclosed Combustor/Vapor Combustor	pilot(s)	added fuel stream(s)	Oil Tank Flash Emissions	Water Tank Flash Emissions	Oil Tank W/B Emissions	Water Tank W/B Emissions	-
NOx	0.007	-	3.574				3.58
CO	0.006	-	16.294				16.30
PM2.5	0.000	-	0.009	0.000	0.000	0.000	0.01
PM10	0.001	-	0.013	0.000	0.001	0.000	0.01
H_2S	0.000	-	0.000	0.000	0.000	0.000	0.00
SO_2	0.000	-	0.000	0.000	0.000	0.000	0.00
CO_2	8.935	-	-	-	-	-	8.94
Total VOC	0.000	-	2.725	0.006	0.145	0.000	2.88
Benzene	0.000	-	0.002	0.000	0.000	0.000	0.00
Toluene	0.000	-	0.003	0.000	0.000	0.000	0.00
Ethylbenzene	0.000	-	0.001	0.000	0.000	0.000	0.00
Xylenes	0.000	-	0.003	0.000	0.000	0.000	0.00
n-Hexane	0.000	-	0.312	0.000	0.015	0.000	0.33
HAP	0.000	-	0.320	0.000	0.015	0.000	0.34
N_2O	0.000	-	0.004	0.000	0.000	0.000	0.00
Lead	0.000	-	0.000	0.000	0.000	0.000	0.00
Formaldehyde	0.000	-	-	-	-	-	0.00

Enclosed Combustor/Vapor Combustor Total Emissions		
	Hourly Emissions (lb/hr)	Annual Emissions (tpy)
Total VOC	0.66	2.88
NOx	0.818	3.582
CO	3.721	16.300
PM2.5	0.002	0.011
PM10	0.003	0.014
H_2S	5.43E-06	2.38E-05
SO_2	1.02E-05	4.47E-05
Benzene (TAPs)	3.92E-04	1.72E-03
Toluene	7.73E-04	3.39E-03
Ethylbenzene	2.34E-04	1.03E-03
Xylenes	6.23E-04	0.003
Hexanes	0.075	0.327
Formaldehyde (TAPs)	1.28E-06	5.58E-06
HAPs	0.08	0.34
CH_4	0.09	0.40
CO_2e	128.64	563.45
N_2O	0.001	0.004
Lead	2.13E-07	9.31E-07

Enter any notes here as needed

1. Emission Factors from AP-42 Tables 1.4-1, 1.4-2, and 1.4.3
2. Emission Factors from AP-42 Tables 13.5-1 and 13.5-2 for industrial flares

Table 11

Enclosed Combustor GHG Emissions
John Campbell North Well Pad
Ritchie County, West Virginia
Antero Resources Corporation

Enclosed Combustor CO_2 and CH_4 Emissions

Components	Mole fraction of oil flash gas constituents[a]	Volume of oil flash gas sent to Enclosed Combustor *scf/year*	Mole fraction of water flash gas constituents[a]	Volume of water flash gas sent to Enclosed Combustor *scf/year*	Mole fraction of oil tank vapors constituents[a]	Volume of oil tank vapor sent to Enclosed Combustor *scf/year*	Mole fraction of water tank vapors constituents[a]	Volume of water tank vapors sent to Enclosed Combustor *scf/year*	Component volume of gas sent to Enclosed Combustor *scf/year*	Number of carbon atoms	Combustion Efficiency	Combusted CO_2 Volume[b] *scf/year*	Uncombusted CO_2 and CH_4 Volume[b] *scf/year*	Volume GHGs Emitted *scf/year*
CO_2	0.001	3,308,282	0.0117	89,604	0.0014	171,811	0.014	4,942	5,884	1	0	--	5,884	9,369,591
Methane	0.263	3,308,282	0.7249	89,604	0.0732	171,811	0.036	4,942	947,727	1	0.98	928,772	18,955	18,955
Ethane	0.242	3,308,282	0.1727	89,604	0.3602	171,811	0.010	4,942	877,153	2	0.98	1,719,220	--	
Propane	0.208	3,308,282	0.0385	89,604	0.2561	171,811	0.000	4,942	734,262	3	0.98	2,158,729	--	
i-Butane	0.046	3,308,282	0.0037	89,604	0.0532	171,811	0.000	4,942	161,553	4	0.98	633,286	--	
n-Butane	0.106	3,308,282	0.0092	89,604	0.1233	171,811	0.000	4,942	373,779	4	0.98	1,465,213	--	
Pentane	0.074	3,308,282	0.0025	89,604	0.0783	171,811	0.000	4,942	257,147	5	0.98	1,260,019	--	
Hexane	0.044	3,308,282	0.0007	89,604	0.0443	171,811	0.000	4,942	152,141	6	0.98	894,591	--	
Benzene	0.000	3,308,282	0.0002	89,604	0.0001	171,811	0.000	4,942	760	6	0.98	4,471	--	
Heptanes	0.007	3,308,282	0.0002	89,604	0.0054	171,811	0.000	4,942	23,808	7	0.98	163,322	--	
Toluene	0.000	3,308,282	0.0003	89,604	0.0002	171,811	0.000	4,942	1,272	7	0.98	8,724	--	
Octane	0.004	3,308,282	0.0002	89,604	0.0036	171,811	0.000	4,942	13,432	8	0.98	105,309	--	
Ethyl benzene	0.000	3,308,282	0.0001	89,604	0.0001	171,811	0.000	4,942	335	8	0.98	2,624	--	
Xylenes	0.000	3,308,282	0.0002	89,604	0.0002	171,811	0.000	4,942	890	8	0.98	6,974	--	
Nonane	0.000	3,308,282	0.0000	89,604	0.0004	171,811	0.000	4,942	1,374	9	0.98	12,117	--	
Decane plus	0.000	3,308,282	0.0000	89,604	0.0000	171,811	0.000	4,942	34	10	0.98	334	--	
											Subtotal	**9,363,707**	--	

Pollutant	Volume Emitted *scf/year*	Density of GHG[c] *lb/scf*	Conversion Factor *lb/ton*	GWF	Emissions[c] *lbs/hr*	Emissions[c] *(tons/yr)*
CO_2	9,369,591	0.12	2000	1	124.03	543.26
CH_4	18,955	0.04	2000	25	0.09	0.40
				CO_2e Emissions	**126.3**	**553.29**

GHG Emissions Summary

Notes
a Flashing/Working/Breathing Losses from ProMax output reports
b 40 CFR 98.233 (n)(4): Eqns: W-19, W-20 and W-21
c 40 CFR 98.233(v) Eqn W-36 - density at 60°F and 14.7 psia

Table 12

Haul Road Emissions
John Campbell North Well Pad
Ritchie County, West Virginia
Antero Resources Corporation

	PM	PM10
Particle Size Multiplier (k)	0.8	0.36
Silt Content of Road Surface Material (s) (%)	5.1	5.1
Days per Year with Precipitation > 0.01 in (p)	150	150
Control Efficiency for Watering [1] (%)	50	50

Tanker Truck Trip Calculation	
Condensate Production (bbl/day)	60
PW Production (bbl/day)	100
Truck Capacity (bbl)	200

Pick Up Truck Trip Calculation	
No of Trips Per day	2
Trips Per Year	730

	# of Wheels	Mean Vehicle Weight (W) (tons)	Mean Vehicle Speed (S) (mph)	Miles Per Trip (miles)	Maximum Trips per Hour	Maximum Trips per Year	Vehicle Miles Travelled (miles/hr)	Vehicle Miles Travelled (miles/year)	PM (lbs/VMT)	PM10 (lbs/VMT)
Tanker Trucks Condensate	10	40	10	0.0800	1	110	0.0800	8.8000	3.8175	1.7179
Tanker Trucks PW	10	40	10	0.0800	1	183	0.0800	14.6400	3.8175	1.7179
Pick Up Truck	4	3	10	0.0000	1	730	0.0000	0.0000	0.3467	0.1560

	Uncontrolled Emissions						Controlled Emissions					
	PM			PM10			PM			PM10		
	(lbs/hr)	(lbs/year)	(tpy)	(lbs/hr)	(lbs/year)	(tpy)	(lbs/hr)	(lbs/year)	(tpy)	(lbs/hr)	(lbs/year)	(tpy)
Tanker Trucks Condensate	0.3054	33.5943	0.0168	0.1374	15.1174	0.0076	0.1527	16.7971	0.0084	0.0687	7.5587	0.0038
Tanker Trucks PW	0.3054	55.8886	0.0279	0.1374	25.1499	0.0126	0.1527	27.9443	0.0140	0.0687	12.5749	0.0063
Pick Up Truck	0.0000	0.0000	0.0000	0.0000	0.0000	0.0000	0.0000	0.0000	0.0000	0.0000	0.0000	0.0000
Total Emissions	0.6108	89.4829	0.0447	0.2749	40.2673	0.0201	0.3054	44.7414	0.0224	0.1374	20.1337	0.0101

Enter any notes here:	1 EPA, AP-42, Volume I, Section 13.2.2 Unpaved Roads (11/06); assume 2:1 moisture ratio Section 13.2.2 Unpaved Roads (11/06) Source: Attachment L, Fugitive Emissions from Unpaved Haul Roads, Rev 03/2007, West Virginia Department of Environmental Protection

Table 13

Change in Regulated Air Pollutants Emissions
John Campbell North Well Pad
Ritchie County, West Virginia
Antero Resources Corporation

	Potential Emissions		Previous Permit Application Emissions		Change in Emissions	
Pollutant	**Hourly PTE**	**Yearly PTE**	**Hourly PTE**	**Yearly PTE**	**Hourly PTE**	**Yearly PTE**
$PM_{2.5}$	0.0203	0.0888	0.1621	0.7	-1.42E-01	-0.6212
PM_{10}	0.1585	0.1024	0.5023	2.2	-0.3438	-2.0976
VOC (uncontrolled)	33.9913	149.6360	108.4475	475.0	-74.4562	-325.3640
CO	3.9187	17.1637	10.1826	44.6	-6.2640	-27.4363
NOx	1.0525	4.6099	1.2785	5.6	-0.2260	-0.9901
SO2	0.0014	0.0062	0.0025	0.011	-1.09E-03	-4.78E-03
Pb	1.39E-06	6.07E-06	0.0000	8.90E-06	-6.45E-07	-2.83E-06
HAPs	0.1871	0.8984	0.1758	0.77	0.0113	0.1284
TAPs	0.0019	0.0085	0.0098	0.043	-7.93E-03	-0.0345

Notes:
1. Change in emissions due to the decreased production and addition of one 1 MMBtu/hr GPU Heater, and removal of Kubota Engine, one well, two 1.5 MMBtu/hr GPU Heaters, two condensate tanks

Bryan Research & Engineering, Inc.

ProMax® 4.0

Copyright © 2002-2016 BRE Group, Ltd. All Rights Reserved.

Simulation Report

Project: PROMAX SCENARIO 3.pmx

Licensed to GHD Limited and Affiliates

Client Name: Antero Resources Corporation
Location: West Virginia
Job: John Campbell North

ProMax Filename: C:\Users\ychen1\Documents\Drafts\082715- ANTERO\05-ProMax Report\1 HP\PROMAX SCENARIO 3.pmx
ProMax Version: 4.0.16071.0
Simulation Initiated: 2/6/2017 5:21:45 PM

Bryan Research & Engineering, Inc.
Chemical Engineering Consultants
P.O. Box 4747 Bryan, Texas 77805
Office: (979) 776-5220
FAX: (979) 776-4818
mailto:sales@bre.com
http://www.bre.com/

Report Navigator can be activated via the ProMax Navigator Toolbar.
An asterisk (*), throughout the report, denotes a user specified value.
A question mark (?) after a value, throughout the report, denotes an extrapolated or approximate value.

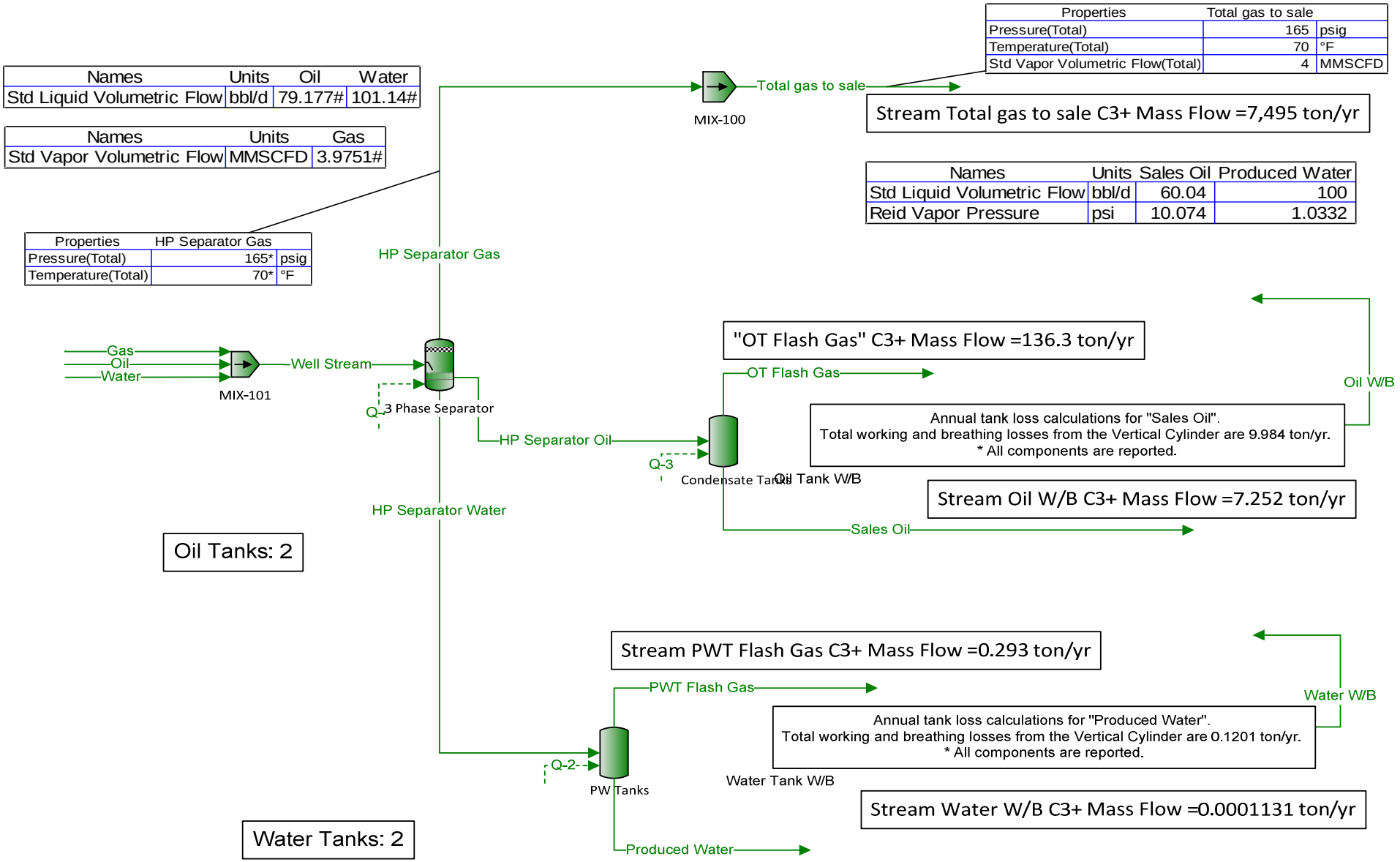
Names | Units | Oil | Water
Std Liquid Volumetric Flow | bbl/d | 79.177# | 101.14#
Names | Units | Gas
Std Vapor Volumetric Flow | MMSCFD | 3.9751#
Properties | HP Separator Gas
Pressure(Total) | 165* | psig
Temperature(Total) | 70* | °F
Properties | Total gas to sale
Pressure(Total) | 165 | psig
Temperature(Total) | 70 | °F
Std Vapor Volumetric Flow(Total) | 4 | MMSCFD
Names | Units | Sales Oil | Produced Water
Std Liquid Volumetric Flow | bbl/d | 60.04 | 100
Reid Vapor Pressure | psi | 10.074 | 1.0332
MIX-100
Total gas to sale
Stream Total gas to sale C3+ Mass Flow =7,495 ton/yr
HP Separator Gas
Gas
Oil
Water
MIX-101
Well Stream
3 Phase Separator
"OT Flash Gas" C3+ Mass Flow =136.3 ton/yr
OT Flash Gas
Oil W/B
Annual tank loss calculations for "Sales Oil".
Total working and breathing losses from the Vertical Cylinder are 9.984 ton/yr.
* All components are reported.
HP Separator Oil
Q-3
Condensate Tanks
Oil Tank W/B
Stream Oil W/B C3+ Mass Flow =7.252 ton/yr
HP Separator Water
Sales Oil
Oil Tanks: 2
Stream PWT Flash Gas C3+ Mass Flow =0.293 ton/yr
PWT Flash Gas
Water W/B
Annual tank loss calculations for "Produced Water".
Total working and breathing losses from the Vertical Cylinder are 0.1201 ton/yr.
* All components are reported.
Q-2
PW Tanks
Water Tank W/B
Stream Water W/B C3+ Mass Flow =0.0001131 ton/yr
Produced Water
Water Tanks: 2

Process Streams		Gas	HP Separator Gas	HP Separator Oil	HP Separator Water	Oil	Oil W/B	OT Flash Gas	Produced Water	PWT Flash Gas	Sales Oil	Total gas to sale	Water	Water W/B	Well Stream
Composition	Status:	Solved	Solved	Solved	Solved	Solved	Solved	Solved	Solved	Solved	Solved	Solved	Solved	Solved	Solved
Phase: **Total**	From Block:	--	3 Phase Separator	3 Phase Separator	3 Phase Separator	--	--	Condensate Tanks	PW Tanks	PW Tanks	Condensate Tanks	MIX-100	--	--	MIX-101
	To Block:	MIX-101	MIX-100	Condensate Tanks	PW Tanks	MIX-101	--	--	--	--	--	--	MIX-101	--	3 Phase Separator
Mole Fraction		%	%	%	%	%	%	%	%	%	%	%	%	%	%
Water		0*	0.211807	0.0695230	99.9681	0*	0.000291726*	0.353010	99.9967	3.03265	0.0101848	0.211807	100*	93.9811*	15.5569
H2S		0*	0	0	0	0*	0*	0	0	0	0	0	0*	0*	0
Nitrogen		0.491*	0.487945	0.00958767	7.30322E-05	0.008*	0.00305941*	0.0549806	2.78769E-06	0.238004	8.62370E-05	0.487945	0*	0.00421406*	0.407124
Carbon Dioxide		0.154*	0.152993	0.0252780	0.000912931	0.026*	0.138296*	0.137036	0.000567485	1.17100	0.00188539	0.152993	0*	1.39154*	0.128057
Methane		78.758*	78.2768	4.65910	0.0231945	4.294*	7.31997*	26.3090	0.00175043	72.6583	0.127455	78.2768	0*	3.57920*	65.3507
Ethane		13.565*	13.5356	4.79070	0.00573129	6.734*	36.0194*	24.1885	0.000622114	17.3115	0.730436	13.5356	0*	1.00583*	11.3488
Propane		4.301*	4.36812	5.51896	0.00123841	9.348*	25.6081*	20.7741	9.80407E-05	3.86387	2.32583	4.36812	0*	0.0349680*	3.71018
Isobutane		0.571*	0.598205	1.90469	0.000116469	3.135*	5.32025*	4.59934	6.58217E-06	0.372324	1.34066	0.598205	0*	0.000843814*	0.521940
n-Butane		1.128*	1.20839	5.59426	0.000295097	9.05*	12.3305*	10.6385	2.15659E-05	0.926796	4.53843	1.20839	0*	0.00189178*	1.07539
Isopentane		0.3*	0.341835	3.83562	5.68871E-05	5.331*	3.86160*	3.60428	3.00353E-06	0.182571	3.88404	0.341835	0*	9.63459E-05*	0.331364
n-Pentane		0.292*	0.342026	5.12706	2.16078E-05	6.772*	3.96482*	3.75950	4.71091E-07	0.0716155	5.41331	0.342026	0*	1.11309E-05*	0.347084
2-Methylpentane		0*	0.0324686	1.12727	2.79050E-06	2.622*	0.375956*	0.377961	8.30005E-08	0.00917360	1.28412	0.0324686	0*	7.83780E-07*	0.0406693
3-Methylpentane		0*	0.0198451	0.765422	4.26623E-06	1.662*	0.230219*	0.232041	3.00758E-07	0.0134361	0.877066	0.0198451	0*	2.54624E-06*	0.0257789
n-Hexane		0.44*	0.319289	15.8987	1.32225E-05	6.01*	3.82109*	3.75977	1.98286E-07	0.0441286	18.4396	0.319289	0*	1.32522E-06*	0.457945
Methylcyclopentane		0*	0.00972722	0.477285	3.56637E-06	0.894*	0.104306*	0.115909	3.99550E-07	0.0107302	0.552927	0.00972722	0*	2.43094E-06*	0.0138667
Benzene		0*	0.00182247	0.0970076	6.20069E-05	0.174*	0.0143841*	0.0217772	5.68900E-05	0.0173936	0.112754	0.00182247	0*	0.000234069*	0.00269888
2-Methylhexane		0*	0.0139940	1.49212	8.22880E-07	1.912*	0.0438790*	0.162785	1.69117E-08	0.00273079	1.77037	0.0139940	0*	1.35181E-08*	0.0296566
3-Methylhexane		0*	0.0107712	1.27502	7.65583E-07	1.57*	0.123632*	0.125742	1.87086E-08	0.00253057	1.51558	0.0107712	0*	4.92185E-08*	0.0243519
Heptane		0*	0.0248252	3.78609	7.30904E-07	4.277*	0.269129*	0.287028	8.11612E-09	0.00244895	4.51850	0.0248252	0*	1.55900E-08*	0.0663397
Methylcyclohexane		0*	0.0154208	2.37780	5.38811E-06	2.677*	0.172441*	0.182075	6.00524E-07	0.0162218	2.83740	0.0154208	0*	1.17701E-06*	0.0415224
Toluene		0*	0.00308562	0.565381	7.43143E-05	0.606*	0.0248035*	0.0364473	6.63775E-05	0.0269577	0.676095	0.00308562	0*	7.85331E-05*	0.00939954
Octane		0*	0.0182619	9.01090	2.11335E-07	7.984*	0.190906*	0.204837	1.00496E-09	0.000712638	10.8541	0.0182619	0*	5.70026E-10*	0.123838
Ethylbenzene		0*	0.000837617	0.472021	1.72454E-05	0.412*	0.00698750*	0.00957218	1.52105E-05	0.00690987	0.568818	0.000837617	0*	6.02575E-06*	0.00639045
m-Xylene		0*	0.00114223	0.701921	1.46743E-05	0.607*	0.0123656*	0.0130055	1.21531E-05	0.00855438	0.846121	0.00114223	0*	5.72780E-06*	0.00941505
o-Xylene		0*	0.00108623	0.769908	3.29598E-05	0.657*	0.00750852*	0.0123820	3.02425E-05	0.00923680	0.928470	0.00108623	0*	7.88720E-06*	0.0101906
Nonane		0*	0.00362610	5.68301	4.35845E-08	4.611*	0.0357466*	0.0396712	2.11784E-10	0.000146955	6.86425	0.00362610	0*	3.55674E-11*	0.0715203
C10+		0*	8.61775E-05	23.9654	1.59771E-08	18.627*	0.000426915*	0.000778505	1.36328E-09	4.95158E-05	28.9815	8.61775E-05	0*	6.47620E-13*	0.288920
Molar Flow		lbmol/h	lbmol/h	lbmol/h	lbmol/h	lbmol/h	lbmol/h	lbmol/h	lbmol/h	lbmol/h	lbmol/h	lbmol/h	lbmol/h	lbmol/h	lbmol/h
Water		0*	0.930243	0.00441213	80.9793	0*	1.50776E-07*	0.00387765	80.9786	0.000725050	0.000534484	0.930243	81.9140*	0.00139726*	81.9140
H2S		0*	0	0	0	0*	0*	0	0	0	0	0	0*	0*	0
Nitrogen		2.14303*	2.14302	0.000608461	5.91599E-05	0.000653370*	1.58122E-06*	0.000603936	2.25750E-06	5.69024E-05	4.52558E-06	2.14302	0*	6.26525E-08*	2.14369
Carbon Dioxide		0.672153*	0.671933	0.00160422	0.000739521	0.00212345*	7.14765E-05*	0.00150527	0.000459556	0.000279965	9.89422E-05	0.671933	0*	2.06888E-05*	0.674277
Methane		343.750*	343.786	0.295680	0.0187888	0.350696*	0.00378324*	0.288992	0.00141752	0.0173712	0.00668864	343.786	0*	5.32138E-05*	344.100
Ethane		59.2062*	59.4475	0.304032	0.00464264	0.549974*	0.0186162*	0.265700	0.000503796	0.00413884	0.0383321	59.4475	0*	1.49542E-05*	59.7562
Propane		18.7723*	19.1845	0.350249	0.00100317	0.763463*	0.0132352*	0.228194	7.93946E-05	0.000923778	0.122056	19.1845	0*	5.19886E-07*	19.5357
Isobutane		2.49221*	2.62727	0.120877	9.43459E-05	0.256039*	0.00274971*	0.0505216	5.33032E-06	8.90156E-05	0.0703559	2.62727	0*	1.25454E-08*	2.74824
n-Butane		4.92331*	5.30716	0.355028	0.000239044	0.739125*	0.00637287*	0.116859	1.74644E-05	0.000221579	0.238169	5.30716	0*	2.81261E-08*	5.66243
Isopentane		1.30939*	1.50131	0.243420	4.60815E-05	0.435389*	0.00199583*	0.0395913	2.43229E-06	4.36492E-05	0.203828	1.50131	0*	1.43242E-09*	1.74478
n-Pentane		1.27447*	1.50215	0.325378	1.75034E-05	0.553078*	0.00204917*	0.0412963	3.81495E-07	1.71219E-05	0.284082	1.50215	0*	1.65489E-10*	1.82755
2-Methylpentane		0*	0.142600	0.0715401	2.26045E-06	0.214142*	0.000194309*	0.00415172	6.72149E-08	2.19323E-06	0.0673883	0.142600	0*	1.16528E-11*	0.214142
3-Methylpentane		0*	0.0871582	0.0485759	3.45587E-06	0.135738*	0.000118986*	0.00254886	2.43557E-07	3.21231E-06	0.0460270	0.0871582	0*	3.78562E-11*	0.135738
n-Hexane		1.92044*	1.40229	1.00898	1.07109E-05	0.490844*	0.00197489*	0.0412993	1.60574E-07	1.05503E-05	0.967679	1.40229	0*	1.97027E-11*	2.41128
Methylcyclopentane		0*	0.0427213	0.0302899	2.88894E-06	0.0730141*	5.39094E-05*	0.00127320	3.23561E-07	2.56538E-06	0.0290167	0.0427213	0*	3.61420E-11*	0.0730141
Benzene		0*	0.00800418	0.00615639	5.02287E-05	0.0142108*	7.43427E-06*	0.000239213	4.60703E-05	4.15848E-06	0.00591717	0.00800418	0*	3.48002E-09*	0.0142108
2-Methylhexane		0*	0.0614606	0.0946941	6.66575E-07	0.156155*	2.26783E-05*	0.00178812	1.36953E-08	6.52880E-07	0.0929060	0.0614606	0*	2.00980E-13*	0.156155
3-Methylhexane		0*	0.0473066	0.0809166	6.20161E-07	0.128224*	6.38980E-05*	0.00138121	1.51505E-08	6.05011E-07	0.0795354	0.0473066	0*	7.31755E-13*	0.128224
Heptane		0*	0.109031	0.240277	5.92070E-07	0.349308*	0.000139097*	0.00315287	6.57254E-09	5.85498E-07	0.237124	0.109031	0*	2.31784E-13*	0.349308
Methylcyclohexane		0*	0.0677272	0.150902	4.36464E-06	0.218634*	8.91240E-05*	0.00200001	4.86312E-07	3.87833E-06	0.148902	0.0677272	0*	1.74991E-11*	0.218634
Toluene		0*	0.0135518	0.0358808	6.01984E-05	0.0494928*	1.28194E-05*	0.000400356	5.37533E-05	6.44508E-06	0.0354804	0.0135518	0*	1.16759E-09*	0.0494928
Octane		0*	0.0802050	0.571858	1.71192E-07	0.652063*	9.86677E-05*	0.00225004	8.13832E-10	1.70378E-07	0.569608	0.0802050	0*	8.47486E-15*	0.652063
Ethylbenzene		0*	0.00367876	0.0299558	1.39697E-05	0.0336485*	3.61141E-06*	0.000105146	1.23176E-05	1.65202E-06	0.0298507	0.00367876	0*	8.95878E-11*	0.0336485
m-Xylene		0*	0.00501661	0.0445459	1.18869E-05	0.0495744*	6.39101E-06*	0.000142859	9.84174E-06	2.04519E-06	0.0444031	0.00501661	0*	8.51581E-11*	0.0495744
o-Xylene		0*	0.00477065	0.0488606	2.66991E-05	0.0536580*	3.88070E-06*	0.000136010	2.44908E-05	2.20834E-06	0.0487246	0.00477065	0*	1.17263E-10*	0.0536580
Nonane		0*	0.0159256	0.360660	3.53057E-08	0.376586*	1.84752E-05*	0.000435769	1.71506E-10	3.51342E-08	0.360225	0.0159256	0*	5.28799E-16*	0.376586
C10+		0*	0.000378485	1.52091	1.29423E-08	1.52129*	2.20646E-07*	8.55151E-06	1.10400E-09	1.18383E-08	1.52090	0.000378485	0*	9.62849E-18*	1.52129
Mass Fraction		%	%	%	%	%	%	%	%	%	%	%	%	%	%
Water		0*	0.183753	0.0116132	99.9616	0*	0.000119169*	0.159165	99.9947	2.62814	0.00150322	0.183753	100*	91.8237*	13.1010
H2S		0*	0	0	0	0*	0*	0	0	0	0	0	0*	0*	0
Nitrogen		0.667398*	0.658247	0.00249036	0.000113556	0.00230762*	0.00194334*	0.0385473	4.33471E-06	0.320727	1.97918E-05	0.658247	0*	0.00640236*	0.533130
Carbon Dioxide		0.328855*	0.324242	0.0103151	0.00223005	0.0117822*	0.138007*	0.150938	0.00138628	2.47907	0.000679789	0.324242	0*	3.32136*	0.263445
Methane		61.3061*	60.4722	0.693038	0.0206532	0.709317*	2.66272*	10.5632	0.00155871	56.0713	0.0167515	60.4722	0*	3.11409*	49.0074
Ethane		19.7914*	19.5997	1.33568	0.00956539	2.08497*	24.5584*	18.2032	0.00103834	25.0402	0.179940	19.5997	0*	1.64028*	15.9517
Propane		9.20244*	9.27561	2.25651	0.00303102	4.24445*	25.6046*	22.9264	0.000239967	8.19600	0.840233	9.27561	0*	0.0836255*	7.64771
Isobutane		1.61033*	1.67434	1.02648	0.000375736	1.87623*	7.01164*	6.69048	2.12354E-05	1.04099	0.638393	1.67434	0*	0.00265988*	1.41809
n-Butane		3.18119*	3.38222	3.01487	0.000952001	5.41624*	16.2505*	15.4754	6.95762E-05	2.59126	2.16109	3.38222	0*	0.00596329*	2.92180
Isopentane		1.05024*	1.18767	2.56595	0.000227810	3.96046*	6.31745*	6.50829	1.20285E-05	0.633642	2.29583	1.18767	0*	0.000376995*	1.11757
n-Pentane		1.02223*	1.18834	3.42990	8.65306E-05	5.03099*	6.48630*	6.78857	1.88662E-06	0.248554	3.19977	1.18834	0*	4.35546E-05*	1.17059
2-Methylpentane		0*	0.134741	0.900733	1.33474E-05	2.32661*	0.734625*	0.815171	3.97022E-07	0.0380283	0.906596	0.134741	0*	3.66311E-06*	0.163829
3-Methylpentane		0*	0.0823547	0.611600	2.04060E-05	1.47476*	0.449852*	0.500457	1.43863E-06	0.0556980	0.619216	0.0823547	0*	1.19002E-05*	0.103846
n-Hexane		1.83981*	1.32501	12.7037	6.32450E-05	5.33292*	7.46647*	8.10893	9.48472E-07	0.182931	13.0185	1.32501	0*	6.19361E-06*	1.84475
Methylcyclopentane		0*	0.0394225	0.372447	1.66594E-05	0.774726*	0.199048*	0.244140	1.86649E-06	0.0434404	0.381239	0.0394225	0*	1.10956E-05*	0.0545526
Benzene		0*	0.00685536	0.0702597	0.000268836	0.139950*	0.0254768*	0.0425734	0.000246663	0.0653568	0.0721568	0.00685536	0*	0.000991594*	0.00985464
2-Methylhexane		0*	0.0675258	1.38632	4.57660E-06	1.97275*	0.0996959*	0.408235	9.40618E-08	0.0131628	1.45333	0.0675258	0*	7.34624E-08*	0.138912
3-Methylhexane		0*	0.0519750	1.18462	4.25793E-06	1.61988*	0.280901*	0.315337	1.04056E-07	0.0121977	1.24418	0.0519750	0*	2.67471E-07*	0.114064
Heptane		0*	0.119790	3.51764	4.06506E-06	4.41289*	0.611480*	0.719812	4.51414E-08	0.0118043	3.70934	0.119790	0*	8.47216E-08*	0.310735
Methylcyclohexane		0*	0.0729138	2.16476	2.93641E-05	2.70649*	0.383914*	0.447424	3.27288E-06	0.0766185	2.28243	0.0729138	0*	6.26761E-06*	0.190578
Toluene		0*	0.0136910	0.483021	0.000380052	0.574938*	0.0518202*	0.0840475	0.000339478	0.119484	0.510358	0.0136910	0*	0.000392434*	0.0404844
Octane		0*	0.100455	9.54391	1.33991E-06	9.39080*	0.494469*	0.585602	6.37199E-09	0.00391586	10.1577	0.100455	0*	3.53136E-09*	0.661256
Ethylbenzene		0*	0.00428232	0.464650	0.000101621	0.450387*	0.0168209*	0.0254338	8.96345E-05	0.0352887	0.494745	0.00428232	0*	3.46949E-05*	0.0317142
m-Xylene		0*	0.00583967	0.690960	8.64707E-05	0.663556*	0.0297674*	0.0345563	7.16175E-05	0.0436872	0.735936	0.00583967	0*	3.29794E-05*	0.0467245

o-Xylene	0*	0.00555336	0.757887	0.000194221	0.718215*	0.0180751*	0.0328997	0.000178217	0.0471723	0.807562	0.00555336	0*	4.54127E-05*	0.0505733
Nonane	0*	0.0223958	6.75829	3.10268E-07	6.08944*	0.103957*	0.127341	1.50771E-09	0.000906658	7.21263	0.0223958	0*	2.47400E-10*	0.428790
C10+	0*	0.000822526	44.0424	1.75765E-07	38.0149*	0.00191863*	0.00386175	1.49982E-08	0.000472097	47.0599	0.000822526	0*	6.96141E-12*	2.67683
Mass Flow	**lb/h**	**lb/h**	**lb/h**	**lb/h**	**lb/h**	**lb/h**	**lb/h**	**lb/h**	**lb/h**	**lb/h**	**lb/h**	**lb/h**	**lb/h**	**lb/h**
Water	0*	16.7586	0.0794858	1458.87	0*	2.71626E-06*	0.0698569	1458.85	0.0130620	0.00962889	16.7586	1475.70*	0.0251721*	1475.70
H2S	0*	0	0	0	0*	0*	0	0	0	0	0	0*	0*	0
Nitrogen	60.0337*	60.0333	0.0170451	0.00165727	0.0183031*	4.42955E-05*	0.0169183	6.32403E-05	0.00159403	0.000126777	60.0333	0*	1.75511E-06*	60.0520
Carbon Dioxide	29.5811*	29.5714	0.0706007	0.0325460	0.0934520*	0.00314565*	0.0662463	0.0202248	0.0123211	0.00435440	29.5714	0*	0.000910502*	29.6746
Methane	5514.59*	5515.17	4.74344	0.301418	5.62603*	0.0606925*	4.63614	0.0227405	0.278677	0.107302	5515.17	0*	0.000853680*	5520.22
Ethane	1780.27*	1787.53	9.14194	0.139600	16.5372*	0.559772*	7.98933	0.0151487	0.124451	1.15261	1787.53	0*	0.000449658*	1796.81
Propane	827.776*	845.952	15.4445	0.0442355	33.6654*	0.583616*	10.0623	0.00350095	0.0407346	5.38213	845.952	0*	2.29247E-05*	861.441
Isobutane	144.852*	152.703	7.02567	0.00548359	14.8816*	0.159819*	2.93643	0.000309810	0.00517378	4.08924	152.703	0*	7.29167E-07*	159.734
n-Butane	286.153*	308.464	20.6350	0.0138938	42.9595*	0.370405*	6.79208	0.00101507	0.0128787	13.8429	308.464	0*	1.63475E-06*	329.113
Isopentane	94.4709*	108.318	17.5624	0.00332472	31.4128*	0.143996*	2.85647	0.000175487	0.00314924	14.7060	108.318	0*	1.03348E-07*	125.884
n-Pentane	91.9517*	108.379	23.4757	0.00126285	39.9039*	0.147845*	2.97948	2.75244E-05	0.00123533	20.4962	108.379	0*	1.19398E-08*	131.856
2-Methylpentane	0*	12.2886	6.16499	0.000194795	18.4538*	0.0167446*	0.357776	5.79227E-06	0.000189003	5.80722	12.2886	0*	1.00419E-09*	18.4538
3-Methylpentane	0*	7.51089	4.18605	0.000297811	11.6972*	0.0102537*	0.219649	2.09886E-05	0.000276822	3.96640	7.51089	0*	3.26227E-09*	11.6972
n-Hexane	165.494*	120.843	86.9491	0.000923013	42.2987*	0.170187*	3.55898	1.38375E-05	0.000909176	83.3901	120.843	0*	1.69789E-09*	207.793
Methylcyclopentane	0*	3.59540	2.54918	0.000243132	6.14483*	0.00453699*	0.107152	2.72307E-05	0.000215901	2.44203	3.59540	0*	3.04169E-09*	6.14483
Benzene	0*	0.625221	0.480887	0.00392346	1.11003*	0.000580705*	0.0186853	0.00359863	0.000324827	0.462201	0.625221	0*	2.71831E-07*	1.11003
2-Methylhexane	0*	6.15847	9.48853	6.67921E-05	15.6471*	0.00227241*	0.179173	1.37230E-06	6.54198E-05	9.30936	6.15847	0*	2.01386E-11*	15.6471
3-Methylhexane	0*	4.74021	8.10800	6.21414E-05	12.8483*	0.00640270*	0.138400	1.51811E-06	6.06233E-05	7.96960	4.74021	0*	7.33233E-11*	12.8483
Heptane	0*	10.9251	24.0762	5.93266E-05	35.0013*	0.0139377*	0.315923	6.58581E-07	5.86680E-05	23.7603	10.9251	0*	2.32252E-11*	35.0013
Methylcyclohexane	0*	6.64986	14.8165	0.000428547	21.4668*	0.00875074*	0.196373	4.77490E-05	0.000380798	14.6201	6.64986	0*	1.71817E-09*	21.4668
Toluene	0*	1.24864	3.30600	0.00554658	4.56018*	0.00118116*	0.0368882	0.00495274	0.000593840	3.26911	1.24864	0*	1.07580E-07*	4.56018
Octane	0*	9.16170	65.3225	1.95550E-05	74.4842*	0.0112707*	0.257019	9.29628E-08	1.94620E-05	65.0655	9.16170	0*	9.68070E-13*	74.4842
Ethylbenzene	0*	0.390555	3.18026	0.00148309	3.57230*	0.000383406*	0.0111628	0.00130770	0.000175387	3.16910	0.390555	0*	9.51109E-09*	3.57230
m-Xylene	0*	0.532589	4.72922	0.00126198	5.26307*	0.000678501*	0.0151667	0.00104485	0.000217128	4.71405	0.532589	0*	9.04081E-09*	5.26307
o-Xylene	0*	0.506476	5.18729	0.00283451	5.69660*	0.000411994*	0.0144396	0.00260006	0.000234449	5.17285	0.506476	0*	1.24492E-08*	5.69660
Nonane	0*	2.04254	46.2565	4.52813E-06	48.2991*	0.00236954*	0.0558896	2.19965E-08	4.50614E-06	46.2006	2.04254	0*	6.78211E-14*	48.2991
C10+	0*	0.0750158	301.445	2.56516E-06	301.520*	4.37321E-05*	0.00169491	2.18812E-07	2.34635E-06	301.443	0.0750158	0*	1.90837E-15*	301.520

Process Streams		**Gas**	**HP Separator Gas**	**HP Separator Oil**	**HP Separator Water**	**Oil**	**Oil W/B**	**OT Flash Gas**	**Produced Water**	**PWT Flash Gas**	**Sales Oil**	**Total gas to sale**	**Water**	**Water W/B**	**Well Stream**
Properties	**Status:**	**Solved**	**Solved**	**Solved**	**Solved**	**Solved**	**Solved**	**Solved**	**Solved**	**Solved**	**Solved**	**Solved**	**Solved**	**Solved**	**Solved**
Phase: **Total**	**From Block:**	--	**3 Phase Separator**	**3 Phase Separator**	**3 Phase Separator**	--	--	**Condensate Tanks**	**PW Tanks**	**PW Tanks**	**Condensate Tanks**	**MIX-100**	--	--	**MIX-101**
	To Block:	**MIX-101**	**MIX-100**	**Condensate Tanks**	**PW Tanks**	**MIX-101**	--	--	--	--	--	--	**MIX-101**	--	**3 Phase Separator**
Property	**Units**														
Temperature	°F	85*	70*	70	70	85*	75.9425*	75.94*	75.94	75.94*	75.94	70	85*	75.9425*	86.3060
Pressure	psig	1000*	165*	165	165	1000*	2.75686	0*	0	0*	0	165	1000*	-14.2235	1000
Mole Fraction Vapor	%	100	100	0	0	0	100*	100	0	100	0	100	0	100*	81.6642
Mole Fraction Light Liquid	%	0	0	100	100	100	0	0	100	0	100	0	100	0	2.82577
Mole Fraction Heavy Liquid	%	0	0	0	0	0	0	0	0	0	0	0	0	0	15.5100
Molecular Weight	lb/lbmol	20.6092	20.7658	107.849	18.0165	97.1164	44.1017	39.9559	18.0156	20.7882	122.060	20.7658	18.0153	18.4385	21.3924
Mass Density	lb/ft^3	4.55631	0.688279	44.7601	62.2675	43.6594	0.136594	0.103547	62.2225	0.0533447	45.5264	0.688279	62.1852	0.00151613	5.59763
Molar Flow	lbmol/h	436.463	439.193	6.34629	81.0051	8.16712	0.0516839	1.09845	80.9812	0.0239081	5.24784	439.193	81.9140	0.00148675	526.544
Mass Flow	lb/h	8995.18	9120.18	684.442	1459.43	793.161	2.27935*	43.8897	1458.93	0.497005	640.552	9120.18	1475.70	0.0274135*	11264.0
Vapor Volumetric Flow	ft^3/h	1974.22	13250.7	15.2913	23.4380	18.1670	16.6870	423.861	23.4470	9.31686	14.0699	13250.7	23.7308	18.0813	2012.29
Liquid Volumetric Flow	gpm	246.137	1652.04	1.90645	2.92214	2.26498	2.08046	52.8451	2.92326	1.16158	1.75417	1652.04	2.95864	2.25429	250.883
Std Vapor Volumetric Flow	MMSCFD	3.97514*	4.00000	0.0577996	0.737764	0.0743830	0.000470717	0.0100043	0.737546	0.000217746	0.0477953	4.00000	0.746041	1.35407E-05	4.79556
Std Liquid Volumetric Flow	sgpm	52.8221	53.2266	1.93534	2.91955	2.30932*	0.00935734	0.184167	2.91669	0.00286315	1.75117	53.2266	2.95004*	6.08666E-05	58.0815
Compressibility		0.785214	0.953791	0.0761718	0.00914698	0.386148	0.980334	0.986570	0.000740266	0.996346	0.00685483	0.953791	0.0502914	0.999551	0.661841
Specific Gravity		0.711581	0.716985	0.717666	0.998372	0.700018	1.52271	1.37957	0.997651	0.717759	0.729951	0.716985	0.997052	0.636633	
API Gravity				64.3176	10.0312	67.0813			10.0026		60.3974		9.87799		
Enthalpy	Btu/h	-1.51954E+07	-1.51308E+07	-601704	-9.96170E+06	-707678	-2372.65	-48726.2	-9.95286E+06	-893.946	-544507	-1.51308E+07	-1.00504E+07	-151.056	-2.59534E+07
Mass Enthalpy	Btu/lb	-1689.28	-1659.04	-879.117	-6825.77	-892.225	-1040.94	-1110.20	-6822.03	-1798.66	-850.059	-1659.04	-6810.58	-5510.26	-2304.10
Mass Cp	Btu/(lb*°F)	0.674973	0.501730	0.499680	0.982123	0.511510	0.409061	0.417169	0.981761	0.474300	0.495639	0.501730	0.979420	0.442724	0.701833
Ideal Gas CpCv Ratio		1.24787	1.25025	1.05104	1.32581	1.05549	1.12497	1.13630	1.32555	1.25335	1.04466	1.25025	1.32512	1.32163	1.24345
Dynamic Viscosity	cP	0.0132014	0.0107079	0.507935	0.995442	0.416095	0.00839717	0.00872594	0.924428	0.0106996	0.626679	0.0107079	0.840378	0.0102595	
Kinematic Viscosity	cSt	0.180878	0.971223	0.708428	0.998008	0.594968	3.83778	5.26081	0.927480	12.5215	0.859333	0.971223	0.843659	422.444	
Thermal Conductivity	Btu/(h*ft*°F)	0.0224371	0.0176764	0.0687798	0.346569	0.0662639	0.0107842	0.0120335	0.349777	0.0170508	0.0695127	0.0176764	0.353848	0.0122560	
Surface Tension	lbf/ft			0.00142225?	0.00502980?	0.000670454			0.004987637		0.00157456		0.00492045		
Net Ideal Gas Heating Value	Btu/ft^3	1127.81	1133.47	5428.03	0.357735	4902.85	2309.54	2096.84	0.0370470	1086.59	6125.30	1133.47	0	49.7426	1010.91
Net Liquid Heating Value	Btu/lb	20708.0	20651.5	18934.1	-1051.84	18988.8	19718.5	19769.7	-1058.93	19746.5	18876.9	20651.5	-1059.76	45.5556	17735.2
Gross Ideal Gas Heating Value	Btu/ft^3	1243.74	1249.82	5830.50	50.6880	5271.63	2510.14	2282.27	50.3488	1199.60	6573.20	1249.82	50.3101	102.219	1120.55
Gross Liquid Heating Value	Btu/lb	22842.7	22777.8	20349.5	8.27297	20428.7	21444.5	21530.7	0.846028	21809.6	20268.5	22777.8	0	1125.58	19680.1

Process Streams		**Gas**	**HP Separator Gas**	**HP Separator Oil**	**HP Separator Water**	**Oil**	**Oil W/B**	**OT Flash Gas**	**Produced Water**	**PWT Flash Gas**	**Sales Oil**	**Total gas to sale**	**Water**	**Water W/B**	**Well Stream**
Composition	**Status:**	**Solved**	**Solved**	**Solved**	**Solved**	**Solved**	**Solved**	**Solved**	**Solved**	**Solved**	**Solved**	**Solved**	**Solved**	**Solved**	**Solved**
Phase: **Vapor**	**From Block:**	--	**3 Phase Separator**	**3 Phase Separator**	**3 Phase Separator**	--	--	**Condensate Tanks**	**PW Tanks**	**PW Tanks**	**Condensate Tanks**	**MIX-100**	--	--	**MIX-101**
	To Block:	**MIX-101**	**MIX-100**	**Condensate Tanks**	**PW Tanks**	**MIX-101**	--	--	--	--	--	--	**MIX-101**	--	**3 Phase Separator**
Mole Fraction		**%**	**%**	**%**	**%**	**%**	**%**	**%**	**%**	**%**	**%**	**%**	**%**	**%**	**%**
Water	0	0.211807				0.000291726	0.353010		3.03265			0.211807		93.9811	0.0787264
H2S	0	0				0	0		0			0		0	0
Nitrogen	0.491	0.487945				0.00305941	0.0549806		0.238004			0.487945		0.00421406	0.496168
Carbon Dioxide	0.154	0.152993				0.138296	0.137036		1.17100			0.152993		1.39154	0.152816
Methane	78.758	78.2768				7.31997	26.3090		72.6583			78.2768		3.57920	79.1605
Ethane	13.565	13.5356				36.0194	24.1885		17.3115			13.5356		1.00583	13.3783
Propane	4.301	4.36812				25.6081	20.7741		3.86387			4.36812		0.0349680	4.15398
Isobutane	0.571	0.598205				5.32025	4.59934		0.372324			0.598205		0.000843814	0.543948
n-Butane	1.128	1.20839				12.3305	10.6385		0.926796			1.20839		0.00189178	1.06904
Isopentane	0.3	0.341835				3.86160	3.60428		0.182571			0.341835		9.63459E-05	0.288399
n-Pentane	0.292	0.342026				3.96482	3.75950		0.0716155			0.342026		1.11309E-05	0.281131
2-Methylpentane	0	0.0324686				0.375956	0.377961		0.00917360			0.0324686		7.83780E-07	0.0255557

3-Methylpentane	0	0.0198451				0.230219	0.232041		0.0134361		0.0198451		2.54624E-06	0.0155217
n-Hexane	0.44	0.319289				3.82109	3.75977		0.0441286		0.319289		1.32522E-06	0.253201
Methylcyclopentane	0	0.00972722				0.104306	0.115909		0.0107302		0.00972722		2.43094E-06	0.00737504
Benzene	0	0.00182247				0.0143841	0.0217772		0.0173936		0.00182247		0.000234069	0.00138562
2-Methylhexane	0	0.0139940				0.0438790	0.162785		0.00273079		0.0139940		1.35181E-08	0.0120614
3-Methylhexane	0	0.0107712				0.123632	0.125742		0.00253057		0.0107712		4.92185E-08	0.00936486
Heptane	0	0.0248252				0.269129	0.287028		0.00244895		0.0248252		1.55900E-08	0.0229200
Methylcyclohexane	0	0.0154208				0.172441	0.182075		0.0162218		0.0154208		1.17701E-06	0.0133041
Toluene	0	0.00308562				0.0248035	0.0364473		0.0269577		0.00308562		7.85331E-05	0.00270775
Octane	0	0.0182619				0.190906	0.204837		0.000712638		0.0182619		5.70026E-10	0.0226881
Ethylbenzene	0	0.000837617				0.00698750	0.00957218		0.00690987		0.000837617		6.02575E-06	0.000991947
m-Xylene	0	0.00114223				0.0123656	0.0130055		0.00855438		0.00114223		5.72780E-06	0.00138540
o-Xylene	0	0.00108623				0.00750852	0.0123820		0.00923680		0.00108623		7.88720E-06	0.00134943
Nonane	0	0.00362610				0.0357466	0.0396712		0.000146955		0.00362610		3.55674E-11	0.00634214
C10+	0	8.61775E-05				0.000426915	0.000778505		4.95158E-05		8.61775E-05		6.47620E-13	0.000837588
Molar Flow	**lbmol/h**	**lbmol/h**	**lbmol/h**	**lbmol/h**	**lbmol/h**	**lbmol/h**	**lbmol/h**	**lbmol/h**	**lbmol/h**	**lbmol/h**	**lbmol/h**	**lbmol/h**	**lbmol/h**	**lbmol/h**
Water	0	0.930243				1.50776E-07	0.00387765		0.000725050		0.930243		0.00139726	0.338522
H2S	0	0				0	0		0		0		0	0
Nitrogen	2.14303	2.14302				1.58122E-06	0.000603936		5.69024E-05		2.14302		6.26525E-08	2.13351
Carbon Dioxide	0.672153	0.671933				7.14765E-05	0.00150527		0.000279965		0.671933		2.06888E-05	0.657105
Methane	343.750	343.786				0.00378324	0.288992		0.0173712		343.786		5.32138E-05	340.389
Ethane	59.2062	59.4475				0.0186162	0.265700		0.00413884		59.4475		1.49542E-05	57.5263
Propane	18.7723	19.1845				0.0132352	0.228194		0.000923778		19.1845		5.19886E-07	17.8620
Isobutane	2.49221	2.62727				0.00274971	0.0505216		8.90156E-05		2.62727		1.25454E-08	2.33897
n-Butane	4.92331	5.30716				0.00637287	0.116859		0.000221579		5.30716		2.81261E-08	4.59687
Isopentane	1.30939	1.50131				0.00199583	0.0395913		4.36492E-05		1.50131		1.43242E-09	1.24011
n-Pentane	1.27447	1.50215				0.00204917	0.0412963		1.71219E-05		1.50215		1.65489E-10	1.20886
2-Methylpentane	0	0.142600				0.000194309	0.00415172		2.19323E-06		0.142600		1.16528E-11	0.109889
3-Methylpentane	0	0.0871582				0.000118986	0.00254886		3.21231E-06		0.0871582		3.78562E-11	0.0667429
n-Hexane	1.92044	1.40229				0.00197489	0.0412993		1.05503E-05		1.40229		1.97027E-11	1.08876
Methylcyclopentane	0	0.0427213				5.39094E-05	0.00127320		2.56538E-06		0.0427213		3.61420E-11	0.0317126
Benzene	0	0.00800418				7.43427E-06	0.000239213		4.15848E-06		0.00800418		3.48002E-09	0.00595814
2-Methylhexane	0	0.0614606				2.26783E-05	0.00178812		6.52880E-07		0.0614606		2.00980E-13	0.0518636
3-Methylhexane	0	0.0473066				6.38980E-05	0.00138121		6.05011E-07		0.0473066		7.31755E-13	0.0402687
Heptane	0	0.109031				0.000139097	0.00315287		5.85498E-07		0.109031		2.31784E-13	0.0985556
Methylcyclohexane	0	0.0677272				8.91240E-05	0.00200001		3.87833E-06		0.0677272		1.74991E-11	0.0572076
Toluene	0	0.0135518				1.28194E-05	0.000400356		6.44508E-06		0.0135518		1.16759E-09	0.0116433
Octane	0	0.0802050				9.86677E-05	0.00225004		1.70378E-07		0.0802050		8.47486E-15	0.0975583
Ethylbenzene	0	0.00367876				3.61141E-06	0.000105146		1.65202E-06		0.00367876		8.95878E-11	0.00426536
m-Xylene	0	0.00501661				6.39101E-06	0.000142859		2.04519E-06		0.00501661		8.51581E-11	0.00595718
o-Xylene	0	0.00477065				3.88070E-06	0.000136010		2.20834E-06		0.00477065		1.17263E-10	0.00580253
Nonane	0	0.0159256				1.84752E-05	0.000435769		3.51342E-08		0.0159256		5.28799E-16	0.0272711
C10+	0	0.000378485				2.20646E-07	8.55151E-06		1.18383E-08		0.000378485		9.62849E-18	0.00360162
Mass Fraction	**%**	**%**	**%**	**%**	**%**	**%**	**%**	**%**	**%**	**%**	**%**	**%**	**%**	**%**
Water	0	0.183753				0.000119169	0.159165		2.62814		0.183753		91.8237	0.0692413
H2S	0	0				0	0		0		0		0	0
Nitrogen	0.667398	0.658247				0.00194334	0.0385473		0.320727		0.658247		0.00640236	0.678575
Carbon Dioxide	0.328855	0.324242				0.138007	0.150938		2.47907		0.324242		3.32136	0.328336
Methane	61.3061	60.4722				2.66272	10.5632		56.0713		60.4722		3.11409	61.9988
Ethane	19.7914	19.5997				24.5584	18.2032		25.0402		19.5997		1.64028	19.6392
Propane	9.20244	9.27561				25.6046	22.9264		8.19600		9.27561		0.0836255	8.94259
Isobutane	1.61033	1.67434				7.01164	6.69048		1.04099		1.67434		0.00265988	1.54349
n-Butane	3.18119	3.38222				16.2505	15.4754		2.59126		3.38222		0.00596329	3.03348
Isopentane	1.05024	1.18767				6.31745	6.50829		0.633642		1.18767		0.000376995	1.01584
n-Pentane	1.02223	1.18834				6.48630	6.78857		0.248554		1.18834		4.35546E-05	0.990241
2-Methylpentane	0	0.134741				0.734625	0.815171		0.0380283		0.134741		3.66311E-06	0.107517
3-Methylpentane	0	0.0823547				0.449852	0.500457		0.0556980		0.0823547		1.19002E-05	0.0653018
n-Hexane	1.83981	1.32501				7.46647	8.10893		0.182931		1.32501		6.19361E-06	1.06525
Methylcyclopentane	0	0.0394225				0.199048	0.244140		0.0434404		0.0394225		1.10956E-05	0.0303020
Benzene	0	0.00685536				0.0254768	0.0425734		0.0653568		0.00685536		0.000991594	0.00528402
2-Methylhexane	0	0.0675258				0.0996959	0.408235		0.0131628		0.0675258		7.34624E-08	0.0590033
3-Methylhexane	0	0.0519750				0.280901	0.315337		0.0121977		0.0519750		2.67471E-07	0.0458122
Heptane	0	0.119790				0.611480	0.719812		0.0118043		0.119790		8.47216E-08	0.112123
Methylcyclohexane	0	0.0729138				0.383914	0.447424		0.0766185		0.0729138		6.26761E-06	0.0637735
Toluene	0	0.0136910				0.0518202	0.0840475		0.119484		0.0136910		0.000392434	0.0121802
Octane	0	0.100455				0.494469	0.585602		0.00391586		0.100455		3.53136E-09	0.126525
Ethylbenzene	0	0.00428232				0.0168209	0.0254338		0.0352887		0.00428232		3.46949E-05	0.00514131
m-Xylene	0	0.00583967				0.0297674	0.0345563		0.0436872		0.00583967		3.29794E-05	0.00718057
o-Xylene	0	0.00555336				0.0180751	0.0328997		0.0471723		0.00555336		4.54127E-05	0.00699417
Nonane	0	0.0223958				0.103957	0.127341		0.000906658		0.0223958		2.47400E-10	0.0397113
C10+	0	0.000822526				0.00191863	0.00386175		0.000472097		0.000822526		6.96141E-12	0.00810472
Mass Flow	**lb/h**	**lb/h**	**lb/h**	**lb/h**	**lb/h**	**lb/h**	**lb/h**	**lb/h**	**lb/h**	**lb/h**	**lb/h**	**lb/h**	**lb/h**	**lb/h**
Water	0	16.7586				2.71626E-06	0.0698569		0.0130620		16.7586		0.0251721	6.09857
H2S	0	0				0	0		0		0		0	0
Nitrogen	60.0337	60.0333				4.42955E-05	0.0169183		0.00159403		60.0333		1.75511E-06	59.7669
Carbon Dioxide	29.5811	29.5714				0.00314565	0.0662463		0.0123211		29.5714		0.000910502	28.9189
Methane	5514.59	5515.17				0.0606925	4.63614		0.278677		5515.17		0.000853680	5460.68
Ethane	1780.27	1787.53				0.559772	7.98933		0.124451		1787.53		0.000449658	1729.76
Propane	827.776	845.952				0.583616	10.0623		0.0407346		845.952		2.29247E-05	787.637
Isobutane	144.852	152.703				0.159819	2.93643		0.00517378		152.703		7.29167E-07	135.946
n-Butane	286.153	308.464				0.370405	6.79208		0.0128787		308.464		1.63475E-06	267.180
Isopentane	94.4709	108.318				0.143996	2.85647		0.00314924		108.318		1.03348E-07	89.4724
n-Pentane	91.9517	108.379				0.147845	2.97948		0.00123533		108.379		1.19398E-08	87.2175
2-Methylpentane	0	12.2886				0.0167446	0.357776		0.000189003		12.2886		1.00419E-09	9.46975
3-Methylpentane	0	7.51089				0.0102537	0.219649		0.000276822		7.51089		3.26227E-09	5.75159
n-Hexane	165.494	120.843				0.170187	3.55898		0.000909176		120.843		1.69789E-09	93.8242
Methylcyclopentane	0	3.59540				0.00453699	0.107152		0.000215901		3.59540		3.04169E-09	2.66891

Benzene	0	0.625221	0.000580705	0.0186853	0.000324827	0.625221	2.71831E-07	0.465402		
2-Methylhexane	0	6.15847	0.00227241	0.179173	6.54198E-05	6.15847	2.01386E-11	5.19684		
3-Methylhexane	0	4.74021	0.00640270	0.138400	6.06233E-05	4.74021	7.33233E-11	4.03500		
Heptane	0	10.9251	0.0139377	0.315923	5.86680E-05	10.9251	2.32252E-11	9.87546		
Methylcyclohexane	0	6.64986	0.00875074	0.196373	0.000380798	6.64986	1.71817E-09	5.61699		
Toluene	0	1.24864	0.00118116	0.0368882	0.000593840	1.24864	1.07580E-07	1.07279		
Octane	0	9.16170	0.0112707	0.257019	1.94620E-05	9.16170	9.68070E-13	11.1439		
Ethylbenzene	0	0.390555	0.000383406	0.0111628	0.000175387	0.390555	9.51109E-09	0.452832		
m-Xylene	0	0.532589	0.000678501	0.0151667	0.000217128	0.532589	9.04081E-09	0.632444		
o-Xylene	0	0.506476	0.000411994	0.0144396	0.000234449	0.506476	1.24492E-08	0.616026		
Nonane	0	2.04254	0.00236954	0.0558896	4.50614E-06	2.04254	6.78211E-14	3.49766		
C10+	0	0.0750158	4.37321E-05	0.00169491	2.34635E-06	0.0750158	1.90837E-15	0.713840		

Process Streams		**Gas**	**HP Separator Gas**	**HP Separator Oil**	**HP Separator Water**	**Oil**	**Oil W/B**	**OT Flash Gas**	**Produced Water**	**PWT Flash Gas**	**Sales Oil**	**Total gas to sale**	**Water**	**Water W/B**	**Well Stream**
Properties	**Status:**	Solved	Solved	Solved	Solved	Solved	Solved	Solved	Solved	Solved	Solved	Solved	Solved	Solved	Solved
Phase: **Vapor**	**From Block:**	--	3 Phase Separator	3 Phase Separator	3 Phase Separator	--	--	Condensate Tanks	PW Tanks	PW Tanks	Condensate Tanks	MIX-100	--	--	MIX-101
	To Block:	MIX-101	MIX-100	Condensate Tanks	PW Tanks	MIX-101	--	--	--	--	--	--	MIX-101	--	3 Phase Separator
Property	**Units**														
Temperature	°F	85	70			75.9425	75.94		75.94		70	75.9425	86.3060		
Pressure	psig	1000	165			2.75686	0		0		165	-14.2235	1000		
Mole Fraction Vapor	%	100	100			100	100		100		100	100	100		
Mole Fraction Light Liquid	%	0	0			0	0		0		0	0	0		
Mole Fraction Heavy Liquid	%	0	0			0	0		0		0	0	0		
Molecular Weight	lb/lbmol	20.6092	20.7658			44.1017	39.9559		20.7882		20.7658	18.4385	20.4831		
Mass Density	lb/ft^3	4.55631	0.688279			0.136594	0.103547		0.0533447		0.688279	0.00151613	4.48691		
Molar Flow	lbmol/h	436.463	439.193			0.0516839	1.09845		0.0239081		439.193	0.00148675	429.998		
Mass Flow	lb/h	8995.18	9120.18			2.27935	43.8897		0.497005		9120.18	0.0274135	8807.71		
Vapor Volumetric Flow	ft^3/h	1974.22	13250.7			16.6870	423.861		9.31686		13250.7	18.0813	1962.98		
Liquid Volumetric Flow	gpm	246.137	1652.04			2.08046	52.8451		1.16158		1652.04	2.25429	244.735		
Std Vapor Volumetric Flow	MMSCFD	3.97514	4.00000			0.000470717	0.0100043		0.000217746		4.00000	1.35407E-05	3.91626		
Std Liquid Volumetric Flow	sgpm	52.8221	53.2266			0.00935734	0.184167		0.00286315		53.2266	6.08666E-05	51.8606		
Compressibility		0.785214	0.953791			0.980334	0.986570		0.996346		0.953791	0.999551	0.790584		
Specific Gravity		0.711581	0.716985			1.52271	1.37957		0.717759		0.716985	0.636633	0.707227		
API Gravity															
Enthalpy	Btu/h	-1.51954E+07	-1.51308E+07			-2372.65	-48726.2		-893.946		-1.51308E+07	-151.056	-1.49506E+07		
Mass Enthalpy	Btu/lb	-1689.28	-1659.04			-1040.94	-1110.20		-1798.66		-1659.04	-5510.26	-1697.45		
Mass Cp	Btu/(lb*°F)	0.674973	0.501730			0.409061	0.417169		0.474300		0.501730	0.442724	0.671236		
Ideal Gas CpCv Ratio		1.24787	1.25025			1.12497	1.13630		1.25335		1.25025	1.32163	1.24894		
Dynamic Viscosity	cP	0.0132014	0.0107079			0.00839717	0.00872594		0.0106996		0.0107079	0.0102595	0.0131920		
Kinematic Viscosity	cSt	0.180878	0.971223			3.83778	5.26081		12.5215		0.971223	422.444	0.183546		
Thermal Conductivity	Btu/(h*ft*°F)	0.0224371	0.0176764			0.0107842	0.0120335		0.0170508		0.0176764	0.0122560	0.0224846		
Surface Tension	lbf/ft														
Net Ideal Gas Heating Value	Btu/ft^3	1127.81	1133.47			2309.54	2096.84		1086.59		1133.47	49.7426	1120.58		
Net Liquid Heating Value	Btu/lb	20708.0	20651.5			19718.5	19769.7		19746.5		20651.5	45.5556	20702.1		
Gross Ideal Gas Heating Value	Btu/ft^3	1243.74	1249.82			2510.14	2282.27		1199.60		1249.82	102.219	1235.98		
Gross Liquid Heating Value	Btu/lb	22842.7	22777.8			21444.5	21530.7		21809.6		22777.8	1125.58	22840.1		

Process Streams		**Gas**	**HP Separator Gas**	**HP Separator Oil**	**HP Separator Water**	**Oil**	**Oil W/B**	**OT Flash Gas**	**Produced Water**	**PWT Flash Gas**	**Sales Oil**	**Total gas to sale**	**Water**	**Water W/B**	**Well Stream**
Composition	**Status:**	Solved	Solved	Solved	Solved	Solved	Solved	Solved	Solved	Solved	Solved	Solved	Solved	Solved	Solved
Phase: **Light Liquid**	**From Block:**	--	3 Phase Separator	3 Phase Separator	3 Phase Separator	--	--	Condensate Tanks	PW Tanks	PW Tanks	Condensate Tanks	MIX-100	--	--	MIX-101
	To Block:	MIX-101	MIX-100	Condensate Tanks	PW Tanks	MIX-101	--	--	--	--	--	--	MIX-101	--	3 Phase Separator
Mole Fraction		%	%	%	%	%	%	%	%	%	%	%	%	%	%
Water				0.0695230	99.9681	0			99.9967		0.0101848		100		0.0757905
H2S				0	0	0			0		0		0		0
Nitrogen				0.00958767	7.30322E-05	0.008			2.78769E-06		8.62370E-05		0		0.0662108
Carbon Dioxide				0.0252780	0.000912931	0.026			0.000567485		0.00188539		0		0.0978229
Methane				4.65910	0.0231945	4.294			0.00175043		0.127455		0		24.3798
Ethane				4.79070	0.00573129	6.734			0.000622114		0.730436		0		14.8979
Propane				5.51896	0.00123841	9.348			9.80407E-05		2.32583		0		11.2350
Isobutane				1.90469	0.000116469	3.135			6.58217E-06		1.34066		0		2.74982
n-Butane				5.59426	0.000295097	9.05			2.15659E-05		4.53843		0		7.15919
Isopentane				3.83562	5.68871E-05	5.331			3.00353E-06		3.88404		0		3.39155
n-Pentane				5.12706	2.16078E-05	6.772			4.71091E-07		5.41331		0		4.15806
2-Methylpentane				1.12727	2.79050E-06	2.622			8.30005E-08		1.28412		0		0.700661
3-Methylpentane				0.765422	4.26623E-06	1.662			3.00758E-07		0.877066		0		0.463689
n-Hexane				15.8987	1.32225E-05	6.01			1.98286E-07		18.4396		0		8.88851
Methylcyclopentane				0.477285	3.56637E-06	0.894			3.99550E-07		0.552927		0		0.277569
Benzene				0.0970076	6.20069E-05	0.174			5.68900E-05		0.112754		0		0.0552117
2-Methylhexane				1.49212	8.22880E-07	1.912			1.69117E-08		1.77037		0		0.700933
3-Methylhexane				1.27502	7.65583E-07	1.57			1.87086E-08		1.51558		0		0.591136
Heptane				3.78609	7.30904E-07	4.277			8.11612E-09		4.51850		0		1.68528
Methylcyclohexane				2.37780	5.38811E-06	2.677			6.00524E-07		2.83740		0		1.08491
Toluene				0.565381	7.43143E-05	0.606			6.63775E-05		0.676095		0		0.254113
Octane				9.01090	2.11335E-07	7.984			1.00496E-09		10.8541		0		3.72678
Ethylbenzene				0.472021	1.72454E-05	0.412			1.52105E-05		0.568818		0		0.197424
m-Xylene				0.701921	1.46743E-05	0.607			1.21531E-05		0.846121		0		0.293095
o-Xylene				0.769908	3.29598E-05	0.657			3.02425E-05		0.928470		0		0.321519
Nonane				5.68301	4.35845E-08	4.611			2.11784E-10		6.86425		0		2.34771
C10+				23.9654	1.59771E-08	18.627			1.36328E-09		28.9815		0		10.2002
Molar Flow		lbmol/h	lbmol/h	lbmol/h	lbmol/h	lbmol/h	lbmol/h	lbmol/h	lbmol/h	lbmol/h	lbmol/h	lbmol/h	lbmol/h	lbmol/h	lbmol/h
Water				0.00441213	80.9793	0			80.9786		0.000534484		81.9140		0.0112768
H2S				0	0	0			0		0		0		0
Nitrogen				0.000608461	5.91599E-05	0.000653370			2.25750E-06		4.52558E-06		0		0.00985146

Carbon Dioxide			0.00160422	0.000739521	0.00212345			0.000459556		9.89422E-05		0		0.0145550		
Methane			0.295680	0.0187888	0.350696			0.00141752		0.00668864		0		3.62746		
Ethane			0.304032	0.00464264	0.549974			0.000503796		0.0383321		0		2.21666		
Propane			0.350249	0.00100317	0.763463			7.93946E-05		0.122056		0		1.67165		
Isobutane			0.120877	9.43459E-05	0.256039			5.33032E-06		0.0703559		0		0.409144		
n-Butane			0.355028	0.000239044	0.739125			1.74644E-05		0.238169		0		1.06521		
Isopentane			0.243420	4.60815E-05	0.435389			2.43229E-06		0.203828		0		0.504626		
n-Pentane			0.325378	1.75034E-05	0.553078			3.81495E-07		0.284082		0		0.618675		
2-Methylpentane			0.0715401	2.26045E-06	0.214142			6.72149E-08		0.0673883		0		0.104251		
3-Methylpentane			0.0485759	3.45587E-06	0.135738			2.43557E-07		0.0460270		0		0.0689920		
n-Hexane			1.00898	1.07109E-05	0.490844			1.60574E-07		0.967679		0		1.32251		
Methylcyclopentane			0.0302899	2.88894E-06	0.0730141			3.23561E-07		0.0290167		0		0.0412993		
Benzene			0.00615639	5.02287E-05	0.0142108			4.60703E-05		0.00591717		0		0.00821491		
2-Methylhexane			0.0946941	6.66575E-07	0.156155			1.36953E-08		0.0929060		0		0.104291		
3-Methylhexane			0.0809166	6.20161E-07	0.128224			1.51505E-08		0.0795354		0		0.0879547		
Heptane			0.240277	5.92070E-07	0.349308			6.57254E-09		0.237124		0		0.250752		
Methylcyclohexane			0.150902	4.36464E-06	0.218634			4.86312E-07		0.148902		0		0.161424		
Toluene			0.0358808	6.01984E-05	0.0494928			5.37533E-05		0.0354804		0		0.0378092		
Octane			0.571858	1.71192E-07	0.652063			8.13832E-10		0.569608		0		0.554505		
Ethylbenzene			0.0299558	1.39697E-05	0.0336485			1.23176E-05		0.0298507		0		0.0293747		
m-Xylene			0.0445459	1.18869E-05	0.0495744			9.84174E-06		0.0444031		0		0.0436095		
o-Xylene			0.0488606	2.66991E-05	0.0536580			2.44908E-05		0.0487246		0		0.0478386		
Nonane			0.360660	3.53057E-08	0.376586			1.71506E-10		0.360225		0		0.349315		
C10+			1.52091	1.29423E-08	1.52129			1.10400E-09		1.52090		0		1.51769		
Mass Fraction	%	%	%	%	%	%	%	%	%	%	%	%	%	%	%	%
Water			0.0116132	99.9616	0			99.9947		0.00150322		100		0.0206264		
H2S			0	0	0			0		0		0		0		
Nitrogen			0.00249036	0.000113556	0.00230762			4.33471E-06		1.97918E-05		0		0.0280196		
Carbon Dioxide			0.0103151	0.00223005	0.0117822			0.00138628		0.000679789		0		0.0650361		
Methane			0.693038	0.0206532	0.709317			0.00155871		0.0167515		0		5.90839		
Ethane			1.33568	0.00956539	2.08497			0.00103834		0.179940		0		6.76727		
Propane			2.25651	0.00303102	4.24445			0.000239967		0.840233		0		7.48404		
Isobutane			1.02648	0.000375736	1.87623			2.12354E-05		0.638393		0		2.41442		
n-Butane			3.01487	0.000952001	5.41624			6.95762E-05		2.16109		0		6.28599		
Isopentane			2.56595	0.000227810	3.96046			1.20285E-05		2.29583		0		3.69653		
n-Pentane			3.42990	8.65306E-05	5.03099			1.88662E-06		3.19977		0		4.53197		
2-Methylpentane			0.900733	1.33474E-05	2.32661			3.97022E-07		0.906596		0		0.912134		
3-Methylpentane			0.611600	2.04060E-05	1.47476			1.43863E-06		0.619216		0		0.603640		
n-Hexane			12.7037	6.32450E-05	5.33292			9.48472E-07		13.0185		0		11.5712		
Methylcyclopentane			0.372447	1.66594E-05	0.774726			1.86649E-06		0.381239		0		0.352892		
Benzene			0.0702597	0.000268836	0.139950			0.000246663		0.0721568		0		0.0651501		
2-Methylhexane			1.38632	4.57660E-06	1.97275			9.40618E-08		1.45333		0		1.06101		
3-Methylhexane			1.18462	4.25793E-06	1.61988			1.04056E-07		1.24418		0		0.894811		
Heptane			3.51764	4.06506E-06	4.41289			4.51414E-08		3.70934		0		2.55103		
Methylcyclohexane			2.16476	2.93641E-05	2.70649			3.27288E-06		2.28243		0		1.60921		
Toluene			0.483021	0.000380052	0.574938			0.000339478		0.510358		0		0.353699		
Octane			9.54391	1.33991E-06	9.39080			6.37199E-09		10.1577		0		6.43095		
Ethylbenzene			0.464650	0.000101621	0.450387			8.96345E-05		0.494745		0		0.316628		
m-Xylene			0.690960	8.64707E-05	0.663556			7.16175E-05		0.735936		0		0.470065		
o-Xylene			0.757887	0.000194221	0.718215			0.000178217		0.807562		0		0.515651		
Nonane			6.75829	3.10268E-07	6.08944			1.50771E-09		7.21263		0		4.54870		
C10+			44.0424	1.75765E-07	38.0149			1.49982E-08		47.0599		0		30.5409		
Mass Flow	lb/h	lb/h	lb/h	lb/h	lb/h	lb/h	lb/h	lb/h	lb/h	lb/h	lb/h	lb/h	lb/h	lb/h	lb/h	lb/h
Water			0.0794858	1458.87	0			1458.85		0.00962889		1475.70		0.203155		
H2S			0	0	0			0		0		0		0		
Nitrogen			0.0170451	0.00165727	0.0183031			6.32403E-05		0.000126777		0		0.275973		
Carbon Dioxide			0.0706007	0.0325460	0.0934520			0.0202248		0.00435440		0		0.640559		
Methane			4.74344	0.301418	5.62603			0.0227405		0.107302		0		58.1933		
Ethane			9.14194	0.139600	16.5372			0.0151487		1.15261		0		66.6527		
Propane			15.4445	0.0442355	33.6654			0.00350095		5.38213		0		73.7123		
Isobutane			7.02567	0.00548359	14.8816			0.000309810		4.08924		0		23.7803		
n-Butane			20.6350	0.0138938	42.9595			0.00101507		13.8429		0		61.9124		
Isopentane			17.5624	0.00332472	31.4128			0.000175487		14.7060		0		36.4081		
n-Pentane			23.4757	0.00126285	39.9039			2.75244E-05		20.4962		0		44.6366		
2-Methylpentane			6.16499	0.000194795	18.4538			5.79227E-06		5.80722		0		8.98386		
3-Methylpentane			4.18605	0.000297811	11.6972			2.09886E-05		3.96640		0		5.94541		
n-Hexane			86.9491	0.000923013	42.2987			1.38375E-05		83.3901		0		113.968		
Methylcyclopentane			2.54918	0.000243132	6.14483			2.72307E-05		2.44203		0		3.47573		
Benzene			0.480887	0.00392346	1.11003			0.00359863		0.462201		0		0.641682		
2-Methylhexane			9.48853	6.67921E-05	15.6471			1.37230E-06		9.30936		0		10.4502		
3-Methylhexane			8.10800	6.21414E-05	12.8483			1.51811E-06		7.96960		0		8.81324		
Heptane			24.0762	5.93266E-05	35.0013			6.58581E-07		23.7603		0		25.1258		
Methylcyclohexane			14.8165	0.000428547	21.4668			4.77490E-05		14.6201		0		15.8495		
Toluene			3.30600	0.00554658	4.56018			0.00495274		3.26911		0		3.48368		
Octane			65.3225	1.95550E-05	74.4842			9.29628E-08		65.0655		0		63.3402		
Ethylbenzene			3.18026	0.00148309	3.57230			0.00130770		3.16910		0		3.11856		
m-Xylene			4.72922	0.00126198	5.26307			0.00104485		4.71405		0		4.62980		
o-Xylene			5.18729	0.00283451	5.69660			0.00260006		5.17285		0		5.07879		
Nonane			46.2565	4.52813E-06	48.2991			2.19965E-08		46.2006		0		44.8014		
C10+			301.445	2.56516E-06	301.520			2.18812E-07		301.443		0		300.806		

Process Streams		**Gas**	**HP Separator Gas**	**HP Separator Oil**	**HP Separator Water**	**Oil**	**Oil W/B**	**OT Flash Gas**	**Produced Water**	**PWT Flash Gas**	**Sales Oil**	**Total gas to sale**	**Water**	**Water W/B**	**Well Stream**
Properties	**Status:**	Solved	Solved	Solved	Solved	Solved	Solved	Solved	Solved	Solved	Solved	Solved	Solved	Solved	Solved
Phase: **Light Liquid**	**From Block:**	--	3 Phase Separator	3 Phase Separator	3 Phase Separator	--	--	Condensate Tanks	PW Tanks	PW Tanks	Condensate Tanks	MIX-100	--	--	MIX-101
	To Block:	MIX-101	MIX-100	Condensate Tanks	PW Tanks	MIX-101	--	--	--	--	--	--	MIX-101	--	3 Phase Separator

Property	Units							
Temperature	°F	70	70	85	75.94	75.94	85	86.3060
Pressure	psig	165	165	1000	0	0	1000	1000
Mole Fraction Vapor	%	0	0	0	0	0	0	0
Mole Fraction Light Liquid	%	100	100	100	100	100	100	100
Mole Fraction Heavy Liquid	%	0	0	0	0	0	0	0
Molecular Weight	lb/lbmol	107.849	18.0165	97.1164	18.0156	122.060	18.0153	66.1961
Mass Density	lb/ft^3	44.7601	62.2675	43.6594	62.2225	45.5264	62.1852	38.4669
Molar Flow	lbmol/h	6.34629	81.0051	8.16712	80.9812	5.24784	81.9140	14.8789
Mass Flow	lb/h	684.442	1459.43	793.161	1458.93	640.552	1475.70	984.928
Vapor Volumetric Flow	ft^3/h	15.2913	23.4380	18.1670	23.4470	14.0699	23.7308	25.6046
Liquid Volumetric Flow	gpm	1.90645	2.92214	2.26498	2.92326	1.75417	2.95864	3.19226
Std Vapor Volumetric Flow	MMSCFD	0.0577996	0.737764	0.0743830	0.737546	0.0477953	0.746041	0.135512
Std Liquid Volumetric Flow	sgpm	1.93534	2.91955	2.30932	2.91669	1.75117	2.95004	3.27140
Compressibility		0.0761718	0.00914698	0.386148	0.000740266	0.00685483	0.0502914	0.298019
Specific Gravity		0.717666	0.998372	0.700018	0.997651	0.729951	0.997052	0.616763
API Gravity		64.3176	10.0312	67.0813	10.0026	60.3974	9.87799	91.7778
Enthalpy	Btu/h	-601704	-9.96170E+06	-707678	-9.95286E+06	-544507	-1.00504E+07	-993081
Mass Enthalpy	Btu/lb	-879.117	-6825.77	-892.225	-6822.03	-850.059	-6810.58	-1008.28
Mass Cp	Btu/(lb*°F)	0.499680	0.982123	0.511510	0.981761	0.495639	0.979420	0.559299
Ideal Gas CpCv Ratio		1.05104	1.32581	1.05549	1.32555	1.04466	1.32512	1.08077
Dynamic Viscosity	cP	0.507935	0.995442	0.416095	0.924428	0.626679	0.840378	0.206649
Kinematic Viscosity	cSt	0.708428	0.998008	0.594968	0.927480	0.859333	0.843659	0.335371
Thermal Conductivity	Btu/(h*ft*°F)	0.0687798	0.346569	0.0662639	0.349777	0.0695127	0.353848	0.0632308
Surface Tension	lbf/ft	0.00142225	0.00502980?	0.000670454	0.00498763?	0.00157456	0.00492045	0.000541375
Net Ideal Gas Heating Value	Btu/ft^3	5428.03	0.357735	4902.85	0.0370470	6125.30	0	3383.11
Net Liquid Heating Value	Btu/lb	18934.1	-1051.84	18988.8	-1058.93	18876.9	-1059.76	19239.4
Gross Ideal Gas Heating Value	Btu/ft^3	5830.50	50.6880	5271.63	50.3488	6573.20	50.3101	3651.50
Gross Liquid Heating Value	Btu/lb	20349.5	8.27297	20428.7	0.846028	20268.5	0	20777.5

Process Streams		Gas	HP Separator Gas	HP Separator Oil	HP Separator Water	Oil	Oil W/B	OT Flash Gas	Produced Water	PWT Flash Gas	Sales Oil	Total gas to sale	Water	Water W/B	Well Stream
Composition	Status:	Solved	Solved	Solved	Solved	Solved	Solved	Solved	Solved	Solved	Solved	Solved	Solved	Solved	Solved
Phase: Heavy Liquid	From Block:	--	3 Phase Separator	3 Phase Separator	3 Phase Separator	--	--	Condensate Tanks	PW Tanks	PW Tanks	Condensate Tanks	MIX-100	--	--	MIX-101
	To Block:	MIX-101	MIX-100	Condensate Tanks	PW Tanks	MIX-101	--	--	--	--	--	--	MIX-101	--	3 Phase Separator
Mole Fraction		%	%	%	%	%	%	%	%	%	%	%	%	%	%
Water															99.8740
H2S															0
Nitrogen															0.000396887
Carbon Dioxide															0.00320394
Methane															0.102818
Ethane															0.0162420
Propane															0.00252857
Isobutane															0.000161388
n-Butane															0.000421594
Isopentane															5.30286E-05
n-Pentane															2.29839E-05
2-Methylpentane															2.19432E-06
3-Methylpentane															3.20619E-06
n-Hexane															9.95615E-06
Methylcyclopentane															2.69507E-06
Benzene															4.62122E-05
2-Methylhexane															4.54239E-07
3-Methylhexane															4.13016E-07
Heptane															4.50856E-07
Methylcyclohexane															3.36111E-06
Toluene															4.92655E-05
Octane															1.44016E-07
Ethylbenzene															1.04471E-05
m-Xylene															9.52316E-06
o-Xylene															2.06286E-05
Nonane															2.42551E-08
C10+															1.21648E-08
Molar Flow		lbmol/h	lbmol/h	lbmol/h	lbmol/h	lbmol/h	lbmol/h	lbmol/h	lbmol/h	lbmol/h	lbmol/h	lbmol/h	lbmol/h	lbmol/h	lbmol/h
Water															81.5642
H2S															0
Nitrogen															0.000324126
Carbon Dioxide															0.00261656
Methane															0.0839681
Ethane															0.0132643
Propane															0.00206501
Isobutane															0.000131801
n-Butane															0.000344303
Isopentane															4.33069E-05
n-Pentane															1.87702E-05
2-Methylpentane															1.79204E-06
3-Methylpentane															2.61840E-06
n-Hexane															8.13090E-06
Methylcyclopentane															2.20099E-06
Benzene															3.77402E-05
2-Methylhexane															3.70964E-07
3-Methylhexane															3.37298E-07
Heptane															3.68201E-07
Methylcyclohexane															2.74492E-06
Toluene															4.02337E-05
Octane															1.17614E-07

Ethylbenzene															8.53187E-06
m-Xylene															7.77728E-06
o-Xylene															1.68467E-05
Nonane															1.98084E-08
C10+															9.93467E-09
Mass Fraction	%	%	%	%	%	%	%	%	%	%	%	%	%	%	%
Water															99.8637
H2S															0
Nitrogen															0.000617088
Carbon Dioxide															0.00782609
Methane															0.0915488
Ethane															0.0271064
Propane															0.00618849
Isobutane															0.000520629
n-Butane															0.00136004
Isopentane															0.000212351
n-Pentane															9.20378E-05
2-Methylpentane															1.04954E-05
3-Methylpentane															1.53351E-05
n-Hexane															4.76199E-05
Methylcyclopentane															1.25889E-05
Benzene															0.000200349
2-Methylhexane															2.52624E-06
3-Methylhexane															2.29698E-06
Heptane															2.50743E-06
Methylcyclohexane															1.83167E-05
Toluene															0.000251941
Octane															9.13062E-07
Ethylbenzene															6.15592E-05
m-Xylene															5.61147E-05
o-Xylene															0.000121553
Nonane															1.72660E-07
C10+															1.33821E-07
Mass Flow	lb/h	lb/h	lb/h	lb/h	lb/h	lb/h	lb/h	lb/h	lb/h	lb/h	lb/h	lb/h	lb/h	lb/h	lb/h
Water															1469.40
H2S															0
Nitrogen															0.00907988
Carbon Dioxide															0.115154
Methane															1.34706
Ethane															0.398846
Propane															0.0910578
Isobutane															0.00766057
n-Butane															0.0200117
Isopentane															0.00312454
n-Pentane															0.00135425
2-Methylpentane															0.000154429
3-Methylpentane															0.000225642
n-Hexane															0.000700683
Methylcyclopentane															0.000185234
Benzene															0.00294795
2-Methylhexane															3.71713E-05
3-Methylhexane															3.37979E-05
Heptane															3.68945E-05
Methylcyclohexane															0.000269513
Toluene															0.00370707
Octane															1.34349E-05
Ethylbenzene															0.000905786
m-Xylene															0.000825675
o-Xylene															0.00178853
Nonane															2.54053E-06
C10+															1.96905E-06

Process Streams		**Gas**	**HP Separator Gas**	**HP Separator Oil**	**HP Separator Water**	**Oil**	**Oil W/B**	**OT Flash Gas**	**Produced Water**	**PWT Flash Gas**	**Sales Oil**	**Total gas to sale**	**Water**	**Water W/B**	**Well Stream**
Properties	**Status:**	Solved	Solved	Solved	Solved	Solved	Solved	Solved	Solved	Solved	Solved	Solved	Solved	Solved	Solved
Phase: **Heavy Liquid**	**From Block:**	--	3 Phase Separator	3 Phase Separator	3 Phase Separator	--	--	Condensate Tanks	PW Tanks	PW Tanks	Condensate Tanks	MIX-100	--	--	MIX-101
	To Block:	MIX-101	MIX-100	Condensate Tanks	PW Tanks	MIX-101	--	--	--	--	--	--	MIX-101	--	3 Phase Separator
Property	**Units**														
Temperature	°F														86.3060
Pressure	psig														1000
Mole Fraction Vapor	%														0
Mole Fraction Light Liquid	%														0
Mole Fraction Heavy Liquid	%														100
Molecular Weight	lb/lbmol														18.0171
Mass Density	lb/ft^3														62.0751
Molar Flow	lbmol/h														81.6671
Mass Flow	lb/h														1471.41
Vapor Volumetric Flow	ft^3/h														23.7036
Liquid Volumetric Flow	gpm														2.95526
Std Vapor Volumetric Flow	MMSCFD														0.743792
Std Liquid Volumetric Flow	sgpm														2.94946
Compressibility															0.0502652
Specific Gravity															0.995288
API Gravity															10.0898
Enthalpy	Btu/h														-1.00097E+07
Mass Enthalpy	Btu/lb														-6802.83

Mass Cp	Btu/(lb*°F)	0.980392
Ideal Gas CpCv Ratio		1.32497
Dynamic Viscosity	cP	0.819416
Kinematic Viscosity	cSt	0.824074
Thermal Conductivity	Btu/(h*ft*°F)	0.352531
Surface Tension	lbf/ft	0.00489875?
Net Ideal Gas Heating Value	Btu/ft^3	1.28368
Net Liquid Heating Value	Btu/lb	-1031.34
Gross Ideal Gas Heating Value	Btu/ft^3	51.6654
Gross Liquid Heating Value	Btu/lb	29.8203

Process Streams		Gas	HP Separator Gas	HP Separator Oil	HP Separator Water	Oil	Oil W/B	OT Flash Gas	Produced Water	PWT Flash Gas	Sales Oil	Total gas to sale	Water	Water W/B	Well Stream
Composition	Status:	Solved	Solved	Solved	Solved	Solved	Solved	Solved	Solved	Solved	Solved	Solved	Solved	Solved	Solved
Phase: **Mixed Liquid**	From Block:	--	3 Phase Separator	3 Phase Separator	3 Phase Separator	--	--	Condensate Tanks	PW Tanks	PW Tanks	Condensate Tanks	MIX-100	--	--	MIX-101
	To Block:	MIX-101	MIX-100	Condensate Tanks	PW Tanks	MIX-101	--	--	--	--	--	--	MIX-101	--	3 Phase Separator
Mole Fraction		%	%	%	%	%	%	%	%	%	%	%	%	%	%
Water															84.4939
H2S															0
Nitrogen															0.0105396
Carbon Dioxide															0.0177859
Methane															3.84420
Ethane															2.30970
Propane															1.73359
Isobutane															0.423917
n-Butane															1.10368
Isopentane															0.522724
n-Pentane															0.640828
2-Methylpentane															0.107982
3-Methylpentane															0.0714630
n-Hexane															1.36984
Methylcyclopentane															0.0427791
Benzene															0.00854789
2-Methylhexane															0.108023
3-Methylhexane															0.0911017
Heptane															0.259723
Methylcyclohexane															0.167201
Toluene															0.0392036
Octane															0.574342
Ethylbenzene															0.0304344
m-Xylene															0.0451777
o-Xylene															0.0495675
Nonane															0.361812
C10+															1.57198
Molar Flow		lbmol/h	lbmol/h	lbmol/h	lbmol/h	lbmol/h	lbmol/h	lbmol/h	lbmol/h	lbmol/h	lbmol/h	lbmol/h	lbmol/h	lbmol/h	lbmol/h
Water															81.5755
H2S															0
Nitrogen															0.0101756
Carbon Dioxide															0.0171716
Methane															3.71142
Ethane															2.22992
Propane															1.67371
Isobutane															0.409275
n-Butane															1.06556
Isopentane															0.504669
n-Pentane															0.618694
2-Methylpentane															0.104253
3-Methylpentane															0.0689947
n-Hexane															1.32252
Methylcyclopentane															0.0413015
Benzene															0.00825265
2-Methylhexane															0.104292
3-Methylhexane															0.0879551
Heptane															0.250752
Methylcyclohexane															0.161426
Toluene															0.0378495
Octane															0.554505
Ethylbenzene															0.0293832
m-Xylene															0.0436172
o-Xylene															0.0478555
Nonane															0.349315
C10+															1.51769
Mass Fraction		%	%	%	%	%	%	%	%	%	%	%	%	%	%
Water															59.8292
H2S															0
Nitrogen															0.0116048
Carbon Dioxide															0.0307659
Methane															2.42395
Ethane															2.72974
Propane															3.00461
Isobutane															0.968435
n-Butane															2.52134
Isopentane															1.48234
n-Pentane															1.81726
2-Methylpentane															0.365749
3-Methylpentane															0.242053

n-Hexane														4.63980
Methylcyclopentane														0.141508
Benzene														0.0262436
2-Methylhexane														0.425440
3-Methylhexane														0.358798
Heptane														1.02290
Methylcyclohexane														0.645263
Toluene														0.141975
Octane														2.57865
Ethylbenzene														0.126997
m-Xylene														0.188518
o-Xylene														0.206836
Nonane														1.82391
C10+														12.2461
Mass Flow	**lb/h**	**lb/h**	**lb/h**	**lb/h**	**lb/h**	**lb/h**	**lb/h**	**lb/h**	**lb/h**	**lb/h**	**lb/h**	**lb/h**	**lb/h**	**lb/h**
Water														1469.60
H2S														0
Nitrogen														0.285053
Carbon Dioxide														0.755712
Methane														59.5404
Ethane														67.0515
Propane														73.8034
Isobutane														23.7880
n-Butane														61.9325
Isopentane														36.4113
n-Pentane														44.6380
2-Methylpentane														8.98401
3-Methylpentane														5.94564
n-Hexane														113.969
Methylcyclopentane														3.47591
Benzene														0.644630
2-Methylhexane														10.4502
3-Methylhexane														8.81327
Heptane														25.1259
Methylcyclohexane														15.8498
Toluene														3.48739
Octane														63.3403
Ethylbenzene														3.11947
m-Xylene														4.63063
o-Xylene														5.08057
Nonane														44.8014
C10+														300.806

Process Streams		**Gas**	**HP Separator Gas**	**HP Separator Oil**	**HP Separator Water**	**Oil**	**Oil W/B**	**OT Flash Gas**	**Produced Water**	**PWT Flash Gas**	**Sales Oil**	**Total gas to sale**	**Water**	**Water W/B**	**Well Stream**
Properties	**Status:**	**Solved**	**Solved**	**Solved**	**Solved**	**Solved**	**Solved**	**Solved**	**Solved**	**Solved**	**Solved**	**Solved**	**Solved**	**Solved**	**Solved**
Phase: **Mixed Liquid**	**From Block:**	**--**	**3 Phase Separator**	**3 Phase Separator**	**3 Phase Separator**	**--**	**--**	**Condensate Tanks**	**PW Tanks**	**PW Tanks**	**Condensate Tanks**	**MIX-100**	**--**	**--**	**MIX-101**
	To Block:	**MIX-101**	**MIX-100**	**Condensate Tanks**	**PW Tanks**	**MIX-101**	**--**	**--**	**--**	**--**	**--**	**--**	**MIX-101**	**--**	**3 Phase Separator**
Property	**Units**														
Temperature	°F														86.3060
Pressure	psig														1000
Mole Fraction Vapor	%														0
Mole Fraction Light Liquid	%														15.4112
Mole Fraction Heavy Liquid	%														84.5888
Molecular Weight	lb/lbmol														25.4421
Mass Density	lb/ft^3														49.8159
Molar Flow	lbmol/h														96.5460
Mass Flow	lb/h														2456.33
Vapor Volumetric Flow	ft^3/h														49.3082
Liquid Volumetric Flow	gpm														6.14752
Std Vapor Volumetric Flow	MMSCFD														0.879304
Std Liquid Volumetric Flow	sgpm														6.22086
Compressibility															0.0884471
Specific Gravity															0.798729
API Gravity															43.2982
Enthalpy	Btu/h														-1.10028E+07
Mass Enthalpy	Btu/lb														-4479.36
Mass Cp	Btu/(lb*°F)														0.811545
Ideal Gas CpCv Ratio															1.22168
Dynamic Viscosity	cP														0.501221
Kinematic Viscosity	cSt														0.628116
Thermal Conductivity	Btu/(h*ft*°F)														0.202304
Surface Tension	lbf/ft														0.00263607?
Net Ideal Gas Heating Value	Btu/ft^3														522.465
Net Liquid Heating Value	Btu/lb														7096.72
Gross Ideal Gas Heating Value	Btu/ft^3														606.445
Gross Liquid Heating Value	Btu/lb														8349.09

February 4, 2014

FESCO, Ltd.
1100 FESCO Avenue - Alice, Texas 78332

For: Antero Resources Appalachian Corp.
1625 17th Street
Denver, Colorado 80202

Sample: Kuhn 1H
Separator Hydrocarbon Liquid
Sampled @ 220 psig & 30 °F

Date Sampled: 01/13/14 Job Number: 41259.002

CHROMATOGRAPH EXTENDED ANALYSIS - GPA 2186-M

COMPONENT	MOL %	LIQ VOL %	WT %
Nitrogen	0.008	0.002	0.002
Carbon Dioxide	0.026	0.010	0.012
Methane	4.294	1.632	0.712
Ethane	6.734	4.039	2.092
Propane	9.348	5.776	4.258
Isobutane	3.135	2.301	1.882
n-Butane	9.050	6.399	5.434
2,2 Dimethylpropane	0.159	0.137	0.119
Isopentane	5.331	4.373	3.974
n-Pentane	6.613	5.376	4.929
2,2 Dimethylbutane	0.204	0.191	0.181
Cyclopentane	0.000	0.000	0.000
2,3 Dimethylbutane	0.466	0.428	0.415
2 Methylpentane	2.622	2.441	2.335
3 Methylpentane	1.662	1.522	1.480
n-Hexane	4.436	4.091	3.949
Heptanes Plus	45.912	61.281	68.228
Totals:	100.000	100.000	100.000

Characteristics of Heptanes Plus:

Specific Gravity	0.7660	(Water=1)
°API Gravity	53.23	@ 60°F
Molecular Weight	143.9	
Vapor Volume	16.90	CF/Gal
Weight	6.38	Lbs/Gal

Characteristics of Total Sample:

Specific Gravity	0.6880	(Water=1)
°API Gravity	74.17	@ 60°F
Molecular Weight	96.8	
Vapor Volume	22.56	CF/Gal
Weight	5.73	Lbs/Gal

Base Conditions: 14.650 PSI & 60 °F

Certified: FESCO, Ltd. - Alice, Texas

Analyst: XG
Processor: JCdjv
Cylinder ID: W-1012

David Dannhaus 361-661-7015

TANKS DATA INPUT REPORT - GPA 2186-M

COMPONENT	Mol %	LiqVol %	Wt %
Carbon Dioxide	0.026	0.010	0.012
Nitrogen	0.008	0.002	0.002
Methane	4.294	1.632	0.712
Ethane	6.734	4.039	2.092
Propane	9.348	5.776	4.258
Isobutane	3.135	2.301	1.882
n-Butane	9.209	6.536	5.553
Isopentane	5.331	4.373	3.974
n-Pentane	6.613	5.376	4.929
Other C-6's	4.954	4.582	4.411
Heptanes	9.556	9.414	9.584
Octanes	10.661	11.267	11.905
Nonanes	4.611	5.694	6.048
Decanes Plus	18.629	32.897	38.137
Benzene	0.174	0.109	0.140
Toluene	0.606	0.455	0.576
E-Benzene	0.412	0.356	0.452
Xylenes	1.264	1.089	1.386
n-Hexane	4.436	4.091	3.949
2,2,4 Trimethylpentane	0.000	0.000	0.000
Totals:	100.000	100.000	100.000

Characteristics of Total Sample:

Specific Gravity	0.6880	(Water=1)
°API Gravity	74.17	@ 60°F
Molecular Weight	96.8	
Vapor Volume	22.56	CF/Gal
Weight	5.73	Lbs/Gal

Characteristics of Decanes (C10) Plus:

Specific Gravity	0.7976	(Water=1)
Molecular Weight	198.2	

Characteristics of Atmospheric Sample:

°API Gravity	63.02	@ 60°F
Reid Vapor Pressure (ASTM D-5191)	5.02	psi

QUALITY CONTROL CHECK			
	Sampling Conditions	Test Samples	
Cylinder Number	------	W-1012*	W-1016
Pressure, PSIG	220	165	159
Temperature, °F	30	70	70

* Sample used for analysis

TOTAL EXTENDED REPORT - GPA 2186-M

COMPONENT	Mol %	LiqVol %	Wt %
Nitrogen	0.008	0.002	0.002
Carbon Dioxide	0.026	0.010	0.012
Methane	4.294	1.632	0.712
Ethane	6.734	4.039	2.092
Propane	9.348	5.776	4.258
Isobutane	3.135	2.301	1.882
n-Butane	9.050	6.399	5.434
2,2 Dimethylpropane	0.159	0.137	0.119
Isopentane	5.331	4.373	3.974
n-Pentane	6.613	5.376	4.929
2,2 Dimethylbutane	0.204	0.191	0.181
Cyclopentane	0.000	0.000	0.000
2,3 Dimethylbutane	0.466	0.428	0.415
2 Methylpentane	2.622	2.441	2.335
3 Methylpentane	1.662	1.522	1.480
n-Hexane	4.436	4.091	3.949
Methylcyclopentane	0.894	0.709	0.777
Benzene	0.174	0.109	0.140
Cyclohexane	0.904	0.690	0.786
2-Methylhexane	1.912	1.994	1.980
3-Methylhexane	1.570	1.616	1.625
2,2,4 Trimethylpentane	0.000	0.000	0.000
Other C-7's	1.029	1.043	1.054
n-Heptane	3.248	3.361	3.362
Methylcyclohexane	2.677	2.414	2.715
Toluene	0.606	0.455	0.576
Other C-8's	5.590	6.103	6.365
n-Octane	2.394	2.751	2.825
E-Benzene	0.412	0.356	0.452
M & P Xylenes	0.607	0.528	0.665
O-Xylene	0.657	0.561	0.721
Other C-9's	2.947	3.593	3.843
n-Nonane	1.664	2.101	2.205
Other C-10's	3.005	4.027	4.386
n-decane	1.153	1.587	1.695
Undecanes(11)	3.083	4.239	4.682
Dodecanes(12)	2.125	3.157	3.535
Tridecanes(13)	1.743	2.776	3.151
Tetradecanes(14)	1.281	2.185	2.514
Pentadecanes(15)	1.035	1.891	2.203
Hexadecanes(16)	0.747	1.459	1.713
Heptadecanes(17)	0.687	1.418	1.681
Octadecanes(18)	0.585	1.273	1.518
Nonadecanes(19)	0.503	1.140	1.368
Eicosanes(20)	0.395	0.930	1.122
Heneicosanes(21)	0.341	0.844	1.025
Docosanes(22)	0.281	0.725	0.884
Tricosanes(23)	0.246	0.657	0.807
Tetracosanes(24)	0.221	0.612	0.754
Pentacosanes(25)	0.187	0.538	0.667
Hexacosanes(26)	0.163	0.486	0.605
Heptacosanes(27)	0.140	0.432	0.541
Octacosanes(28)	0.107	0.343	0.430
Nonacosanes(29)	0.103	0.340	0.428
Triacontanes(30)	0.089	0.304	0.384
Hentriacontanes Plus(31+)	0.408	1.533	2.043
Total	100.000	100.000	100.000

Element Material Technology
2129 West Willow Street
Scott, LA
70583-5301 USA

P 337 232 3568
F 337 232 3621
T 888 786 7555
info.scott@element.com
element.com

Gas Analysis Report No: 229140 229140-8 -42 **Date:** 6/29/2016

For: ANTERO RESOURCES
Attn: DOUG STEBBINS

Sample Identification:
Company: ANTERO RESOURCES
Field: WHITE OAKS
Lease: KUNN 1H
STA # : NP

Sample Data: **Date:** 06/22/2016 **By:** R. SWIGER
PSIG: 160 **Temp:** 80 **DEG. F.**

Remarks:

CYL # 1020

Effective Date: 06/22/2016

Hydrocarbon Analysis - Method GPA 2261-13 **Lab Analyst:** LD

Component Name		Mol Percent	GPM @ 14.730 PSIA
Carbon Dioxide	(CO2)	0.154	
Nitrogen	(N2)	0.491	
Methane	(C1)	78.758	
Ethane	(C2)	13.565	3.640
Propane	(C3)	4.301	1.189
Iso-Butane	(IC4)	0.571	0.187
N-Butane	(NC4)	1.128	0.357
Iso-Pentane	(IC5)	0.300	0.110
N-Pentane	(NC5)	0.292	0.106
Hexanes Plus	(C6+)	0.440	0.192
Total		100.000	

Mol Weight: 20.64
BTU/LB: 22896.82

Ethane + GPM: 5.781
Propane + GPM: 2.141
Iso-Pentane + GPM: 0.408

Compressibility Factor: 0.9965
Specific Gravity @ 60 Deg. F. (Air = 1) : 0.715

BTU/Cuft. (Real) 60 Deg. F. - PSIA:	14.650	14.696	14.730	15.025
Dry:	1245.7	1249.6	1252.5	1277.7
Sat:	1224.5	1228.4	1231.2	1256.0

Quality Officer: Tiffany Hebert

This document shall not be reproduced, except in full, without the written approval of Element Materials Technology

Attachment U
Facility-wide Emissions Summary Sheet(s)

ATTACHMENT U – FACILITY-WIDE CONTROLLED EMISSIONS SUMMARY SHEET

List all sources of emissions in this table. Use extra pages if necessary.

Emission Point ID#	NOx		CO		VOC		SO2		PM10		PM2.5		CH_4		GHG (CO2e)	
	lb/hr	tpy	lb/hr	tpy	lb/hr	tpy	lb/hr	tpy	lb/hr	tpy	lb/hr	tpy	lb/hr	tpy	lb/hr	tpy
EP-HR001									0.1374	0.0101						
EP-PCV					0.0241	0.1054							0.0824	0.3609	2.0602	9.0239
F001					1.1206	4.9080							0.9951	4.3585	24.8772	108.9621
EP-L001					16.5251	0.7540							0.6058	0.0276	15.1754	0.6924
EP-L002					1.11E-03	8.47E-05							0.0368	0.0028	0.9597	0.0730
GPU001-003 (emissions per EPN)	0.0783	0.3428	0.0657	0.2880	0.0043	0.0189	0.0005	0.0021	0.0059	0.0261	0.0059	0.0261	0.0018	0.0079	93.9188	411.3642
EP-EC001 (emissions per EPN)	0.8177	3.5815	3.7214	16.2999	0.6568	2.8766	0.0000	0.0000	0.0032	0.0141	0.0024	0.0106	0.0916	0.4013	128.6411	563.4479
TOTAL	1.0525	4.6099	3.9187	17.1637	0.6697	3.6873	0.0014	0.0062	0.0211	0.0923	0.0203	0.0888	0.0970	0.4554	410.3974	1798.3058

Annual emissions shall be based on 8760 hours per year of operation for all emission units except emergency generators.

According to 45CSR14 Section 2.43.e, fugitive emissions are not included in the major source determination because it is not listed as one of the source categories in Table 1. Therefore, fugitive emissions shall not be included in the PTE above

ATTACHMENT U – FACILITY-WIDE CONTROLLED EMISSIONS SUMMARY SHEET

List all sources of emissions in this table. Use extra pages if necessary.

Emission Point ID#	Formaldehyde		Benzene		Toluene		Ethylbenzene		Xylenes		Hexane		Total HAPs	
	lb/hr	tpy	lb/hr	tpy	lb/hr	tpy	lb/hr	tpy	lb/hr	tpy	lb/hr	tpy	lb/hr	tpy
EP-HR001														
EP-PCV			0.00E+00	0.00E+00	0.00E+00	0.00E+00	0.00E+00	0.00E+00	0.00E+00	0.00E+00	0.0025	0.0108	0.0025	0.0108
F001			0.0013	0.0057	0.0054	0.0236	0.0042	0.0185	0.0130	0.0567	0.0797	0.3489	0.1035	0.4535
EP-L001			5.80E-03	2.64E-04	1.18E-02	5.38E-04	3.83E-03	1.75E-04	0.011	4.97E-04	1.699	0.077	1.731	0.079
EP-L002			1.17E-05	8.91E-07	4.64E-06	3.53E-07	4.10E-07	3.12E-08	9.27E-07	7.05E-08	7.32E-08	5.57E-09	1.78E-05	1.35E-06
GPU001-003 (emissions per EPN)	0.0001	0.0003	1.64E-06	7.20E-06	2.66E-06	1.17E-05			0.00E+00	0.00E+00	0.0014	0.0062	0.0015	0.0065
EP-EC001 (emissions per EPN)	1.28E-06	5.58E-06	3.92E-04	1.72E-03	7.73E-04	3.39E-03	2.34E-04	1.03E-03	6.23E-04	2.73E-03	7.46E-02	3.27E-01	7.67E-02	3.36E-01
TOTAL	0.0002	0.0008	0.0004	0.0020	0.0008	0.0040	0.0002	0.0012	0.0006	0.0032	0.0789	0.4229	0.0811	0.4341

Annual emissions shall be based on 8760 hours per year of operation for all emission units except emergency generators.

According to 45CSR14 Section 2.43.e, fugitive emissions are not included in the major source determination because it is not listed as one of the source categories in Table 1. Therefore, fugitive emissions shall not be included in the PTE above

Attachment V
Class I Legal Advertisement

Attachment V

Air Quality Permit Notice
Notice of Application
John Campbell North Well Pad
Antero Resources Corporation
Ritchie County, West Virginia

Notice is given that Antero Resources Corporation has applied to the West Virginia Department of Environmental Protection, Division of Air Quality, for a G70-D General Permit Modification for an Oil and Natural Gas Production facility located at 760 Church St, in Ritchie County, West Virginia.

The latitude and longitude coordinates are: 39.18087 and -80.93011

The applicant estimates the increased potential to discharge the following Regulated Air Pollutants will be:

Pollutants	TOTALS (tpy):
NO_X	4.6099
CO	17.1637
$PM_{2.5}$	0.0888
PM_{10}	0.0923
VOC	3.6873
SO_2	0.0062
CO_{2e}	1798.3058
CH_4	0.4554
Formaldehyde	0.0008
Benzene	0.0020
Toluene	0.0040
Ethylbenzene	0.0012
Xylenes	0.0032
Hexane	0.4229
Total HAPs	0.4341

Proposed new equipment will be installed by November 01, 2017 and the facility is expected to begin the operations by June 01, 2018. Written comments will be received by the West Virginia Department of Environmental Protection, Division of Air Quality, 601 57th Street, SE, Charleston, WV 25304, for at least 30 calendar days from the date of publication of this notice.

Any questions regarding this permit application should be directed to the DAQ at (304) 926-0499, extension 1250, during normal business hours.
Dated this the __ day of _____, 2017

By: Antero Resources Corporation
Barry Schatz
Senior Environmental & Regulatory Manager
1615 Wynkoop Street
Denver, CO 80202

www.ghd.com