Roy
G70-A140
085-00047

CONESTOGA-ROVERS & ASSOCIATES

www.CRAworld.com

General Permit Application G70-A

Osborne Well Pad

Prepared for: Antero Resources Corporation

JAN 21 2015

Conestoga-Rovers & Associates
6320 Rothway, Suite 100
Houston, Texas 77040

January 2015 • 082715 • Report No. 100

Partners in Sustainability

Table of Contents

G70-A General Permit Registration Form

Attachment A	Current Business Certificate
Attachment B	Process Description
Attachment C	Description of Fugitive Emissions
Attachment D	Process Flow Diagram
Attachment E	Plot Plan
Attachment F	Area Map
Attachment G	Emission Unit Data Sheets/G70-A Section Applicability Form
Attachment H	Air Pollution Control Device Data Sheet
Attachment I	Emission Calculations
Attachment J	Class I Legal Advertisement
Attachment K	Electronic Submittal
Attachment L	General Permit Registration Application Fee
Attachment M	Siting Criteria Waiver
Attachment N	Material Safety Data Sheets
Attachment O	Emissions Summary Sheet
Attachment P	Other Supporting Documentation Not Described Above

WEST VIRGINIA
DEPARTMENT OF ENVIRONMENTAL PROTECTION
DIVISION OF AIR QUALITY
601 57th Street, SE
Charleston, WV 25304
Phone: (304) 926-0475 • www.dep.wv.gov/daq

APPLICATION FOR GENERAL PERMIT REGISTRATION

CONSTRUCT, MODIFY, RELOCATE OR ADMINISTRATIVELY UPDATE

A STATIONARY SOURCE OF AIR POLLUTANTS

☒ CONSTRUCTION ☐ MODIFICATION ☐ RELOCATION ☐ CLASS I ADMINISTRATIVE UPDATE
☐ CLASS II ADMINISTRATIVE UPDATE

CHECK WHICH TYPE OF GENERAL PERMIT REGISTRATION YOU ARE APPLYING FOR:

☐ **G10-D** – Coal Preparation and Handling
☐ **G20-B** – Hot Mix Asphalt
☐ **G30-D** – Natural Gas Compressor Stations
☐ **G33-A** – Spark Ignition Internal Combustion Engines
☐ **G35-A** – Natural Gas Compressor Stations (Flare/Glycol Dehydration Unit)
☐ **G40-C** – Nonmetallic Minerals Processing
☐ **G50-B** – Concrete Batch
☐ **G60-C** - Class II Emergency Generator
☐ **G65-C** – Class I Emergency Generator
☒ **G70-A** – Class II Oil and Natural Gas Production Facility

SECTION I. GENERAL INFORMATION

1. Name of applicant (as registered with the WV Secretary of State's Office):
Antero Resources Corporation

2. Federal Employer ID No. **(FEIN):**
80-0162034

3. Applicant's mailing address:
1615 Wynkoop St.
Denver, CO, 80202

4. Applicant's physical address:
1615 Wynkoop St.
Denver, CO, 80202

5. If applicant is a subsidiary corporation, please provide the name of parent corporation:

6. **WV BUSINESS REGISTRATION.** Is the applicant a resident of the State of West Virginia? ☐ **YES** ☒ **NO**

- IF **YES,** provide a copy of the Certificate of **Incorporation/ Organization / Limited Partnership** (one page) including any name change amendments or other Business Registration Certificate as **Attachment A.**
- IF **NO,** provide a copy of the **Certificate of Authority / Authority of LLC / Registration** (one page) including any name change amendments or other Business Certificate as **Attachment A.**

SECTION II. FACILITY INFORMATION

7. Type of plant or facility (stationary source) to be constructed, modified, relocated or administratively updated (e.g., coal preparation plant, primary crusher, etc.):
Natural Gas and Oil Production facility

8a. Standard Industrial Classification (SIC) code: 1311 AND 8b. North American Industry System (NAICS) code: 211111

9. DAQ Plant ID No. (for existing facilities only):

10. List all current 45CSR13 and other General Permit numbers associated with this process (for existing facilities only):
N/A

A: PRIMARY OPERATING SITE INFORMATION

11A. Facility name of primary operating site:	12A. Address of primary operating site:
Osborne Well Pad	Mailing: N/A Physical: 0.61 mile North from the intersection of WV-9 and WV-22

13A. Does the applicant own, lease, have an option to buy, or otherwise have control of the proposed site? ☒ YES ☐ NO

- IF **YES**, please explain: Antero is leasing the mineral rights for this site
- IF **NO**, YOU ARE NOT ELIGIBLE FOR A PERMIT FOR THIS SOURCE.

14A.
- For **Modifications or Administrative Updates** at an existing facility, please provide directions to the present location of the facility from the nearest state road;
- For Construction or Relocation permits, please provide directions to the proposed new site location from the nearest state road. Include a **MAP** as **Attachment F.**

To access the pad from the US-50/Cabin Run intersection, turn south onto Cabin Run (road will become Right Fork Cabin Run Road), travel 3.0 miles and turn right onto Taylor Drain Road. Travel 3.2 miles and turn right onto S. Fork of Hughes River Road. Travel 2.3 miles and the access road to the pad will be on your right.

15A. Nearest city or town:	16A. County:	17A. UTM Coordinates:
White Oak	Ritchie	Northing (KM): 4339.8431 Easting (KM): 510.6698 Zone: 17 N

18A. Briefly describe the proposed new operation or change (s) to the facility:	19A. Latitude & Longitude Coordinates (NAD83, Decimal Degrees to 5 digits):
Construction of a new natural gas and oil production facility.	Latitude: 39.207791 Longitude: -80.876418

B: 1ST ALTERNATE OPERATING SITE INFORMATION (only available for G20, G40, & G50 General Permits)

11B. Name of 1st alternate operating site:	12B. Address of 1st alternate operating site:
	Mailing: Physical:

13B. Does the applicant own, lease, have an option to buy, or otherwise have control of the proposed site? ☐ YES ☐ NO

- IF **YES**, please explain:
- IF **NO**, YOU ARE NOT ELIGIBLE FOR A PERMIT FOR THIS SOURCE.

14B.
- For **Modifications or Administrative Updates** at an existing facility, please provide directions to the present location of the facility from the nearest state road;
- For Construction or Relocation permits, please provide directions to the proposed new site location from the nearest state road. Include a **MAP** as **Attachment F.**

15B. Nearest city or town:	16B. County:	17B. UTM Coordinates: Northing (KM): _____ Easting (KM): _____ Zone: _____
18B. Briefly describe the proposed new operation or change (s) to the facility:		19B. Latitude & Longitude Coordinates (NAD83, Decimal Degrees to 5 digits): Latitude: _____ Longitude: _____

C: 2ND ALTERNATE OPERATING SITE INFORMATION (only available for G20, G40, & G50 General Permits):

11C. Name of 2nd alternate operating site:	12C. Address of 2nd alternate operating site: Mailing: _____ Physical: _____

13C. Does the applicant own, lease, have an option to buy, or otherwise have control of the proposed site? ☐ **YES** ☐ **NO**

- IF **YES**, please explain: _____

- IF **NO**, YOU ARE NOT ELIGIBLE FOR A PERMIT FOR THIS SOURCE.

14C.
- For **Modifications or Administrative Updates** at an existing facility, please provide directions to the present location of the facility from the nearest state road;
- For Construction or Relocation permits, please provide directions to the proposed new site location from the nearest state road. Include a **MAP** as **Attachment F**.

_____

_____

_____

15C. Nearest city or town:	16C. County:	17C. UTM Coordinates: Northing (KM): _____ Easting (KM): _____ Zone: _____
18C. Briefly describe the proposed new operation or change (s) to the facility:		19C. Latitude & Longitude Coordinates (NAD83, Decimal Degrees to 5 digits): Latitude: _____ Longitude: _____

20. Provide the date of anticipated installation or change: 10/01/2015 ☐ If this is an **After-The-Fact** permit application, provide the date upon which the proposed change did happen: : ____/____/____	21. Date of anticipated Start-up if registration is granted: 11/01/2015

22. Provide maximum projected **Operating Schedule** of activity/activities outlined in this application if other than 8760 hours/year. (Note: anything other than **24/7/52** may result in a **restriction** to the facility's operation).

Hours per day_____ Days per week _____ Weeks per year _____ Percentage of operation _____

SECTION III. ATTACHMENTS AND SUPPORTING DOCUMENTS

23. Include a check payable to WVDEP – Division of Air Quality with the appropriate **application fee** (per 45CSR22 and 45CSR13).

24. Include a **Table of Contents** as the first page of your application package.

All of the required forms and additional information can be found under the Permitting Section (General Permits) of DAQ's website, or requested by phone

25. Please check all attachments included with this permit application. Please refer to the appropriate reference document for an explanation of the attachments listed below.

- ☒ ATTACHMENT A : CURRENT BUSINESS CERTIFICATE
- ☒ ATTACHMENT B: PROCESS DESCRIPTION
- ☒ ATTACHMENT C: DESCRIPTION OF FUGITIVE EMISSIONS
- ☒ ATTACHMENT D: PROCESS FLOW DIAGRAM
- ☒ ATTACHMENT E: PLOT PLAN
- ☒ ATTACHMENT F: AREA MAP
- ☒ ATTACHMENT G: EQUIPMENT DATA SHEETS AND REGISTRATION SECTION APPLICABILITY FORM
- ☒ ATTACHMENT H: AIR POLLUTION CONTROL DEVICE SHEETS
- ☒ ATTACHMENT I: EMISSIONS CALCULATIONS
- ☒ ATTACHMENT J: CLASS I LEGAL ADVERTISEMENT
- ☐ ATTACHMENT K: ELECTRONIC SUBMITTAL
- ☒ ATTACHMENT L: GENERAL PERMIT REGISTRATION APPLICATION FEE
- ☐ ATTACHMENT M: SITING CRITERIA WAIVER
- ☒ ATTACHMENT N: MATERIAL SAFETY DATA SHEETS (MSDS)
- ☒ ATTACHMENT O: EMISSIONS SUMMARY SHEETS
- ☒ OTHER SUPPORTING DOCUMENTATION NOT DESCRIBED ABOVE (Equipment Drawings, Aggregation Discussion, etc.)

Please mail an original and two copies of the complete General Permit Registration Application with the signature(s) to the DAQ Permitting Section, at the address shown on the front page of this application. Please DO NOT fax permit applications. For questions regarding applications or West Virginia Air Pollution Rules and Regulations, please refer to the website shown on the front page of the application or call the phone number also provided on the front page of the application.

SECTION IV. CERTIFICATION OF INFORMATION

This General Permit Registration Application shall be signed below by a Responsible Official. A Responsible Official is a President, Vice President, Secretary, Treasurer, General Partner, General Manager, a member of a Board of Directors, or Owner, depending on business structure. A business may certify an Authorized Representative who shall have authority to bind the Corporation, Partnership, Limited Liability Company, Association, Joint Venture or Sole Proprietorship. Required records of daily throughput, hours of operation and maintenance, general correspondence, Emission Inventory, Certified Emission Statement, compliance certifications and all required notifications must be signed by a Responsible Official or an Authorized Representative. If a business wishes to certify an Authorized Representative, the official agreement below shall be checked off and the appropriate names and signatures entered. Any administratively incomplete or improperly signed or unsigned Registration Application will be returned to the applicant.

FOR A CORPORATION (domestic or foreign)

☐ I certify that I am a President, Vice President, Secretary, Treasurer or in charge of a principal business function of the corporation

FOR A PARTNERSHIP

☐ I certify that I am a General Partner

FOR A LIMITED LIABILITY COMPANY

☐ I certify that I am a General Partner or General Manager

FOR AN ASSOCIATION

☐ I certify that I am the President or a member of the Board of Directors

FOR A JOINT VENTURE

☐ I certify that I am the President, General Partner or General Manager

FOR A SOLE PROPRIETORSHIP

☐ I certify that I am the Owner and Proprietor

☐ *I hereby certify that* (please print or type) _____

is an Authorized Representative and in that capacity shall represent the interest of the business (e.g., Corporation, Partnership, Limited Liability Company, Association Joint Venture or Sole Proprietorship) and may obligate and legally bind the business. If the business changes its Authorized Representative, a Responsible Official shall notify the Director of the Office of Air Quality immediately, and/or,

I hereby certify that all information contained in this General Permit Registration Application and any supporting documents appended hereto is, to the best of my knowledge, true, accurate and complete, and that all reasonable efforts have been made to provide the most comprehensive information possible

Signature _____
(please use blue ink) Responsible Official Date

Name & Title Donald Gray, Environmental and Regulatory Manager
(please print or type)

Signature _____ 1-20-15
(please use blue ink) Authorized Representative (if applicable) Date

Applicant's Name Antero Resources Corporation

Phone & Fax 303-357-6730 303-357-7315
Phone Fax

Email dgray@anteroresources.com

Attachment R
AUTHORITY OF CORPORATION
OR OTHER BUSINESS ENTITY (DOMESTIC OR FOREIGN)

TO: The West Virginia Department of Environmental Protection, Division of Air Quality

DATE: 6/14/13: 14 JUN, 2013

ATTN.: Director

Corporation's / other business entity's Federal Employer I.D. Number 80-0162034

The undersigned hereby files with the West Virginia Department of Environmental Protection, Division of Air Quality, a permit application and hereby certifies that the said name is a trade name which is used in the conduct of an incorporated business or other business entity.

Further, the corporation or the business entity certifies as follows:

(1) DONALD C. GRAY (is/are) the authorized representative(s) and in that capacity may represent the interest of the corporation or the business entity and may obligate and legally bind the corporation or the business entity.

(2) The corporation or the business entity is authorized to do business in the State of West Virginia.

(3) If the corporation or the business entity changes its authorized representative(s), the corporation or the business entity shall notify the Director of the West Virginia Department of Environmental Protection, Division of Air Quality, immediately upon such change.

KEVIN J. KILSTROM - VICE PRESIDENT

President or Other Authorized Officer
(Vice President, Secretary, Treasurer or other official in charge of a principal business function of the corporation or the business entity)

(If not the President, then the corporation or the business entity must submit certified minutes or bylaws stating legal authority of other authorized officer to bind the corporation or the business entity).

Secretary

Name of Corporation or business entity

Attachment A

Current Business Certificate

State of West Virginia

Certificate

I, Natalie E. Tennant, Secretary of State of the State of West Virginia, hereby certify that

ANTERO RESOURCES CORPORATION

a corporation formed under the laws of Delaware, which is authorized to transact business in West Virginia by a Certificate of Authority has filed in my office as required by the provisions of the West Virginia Code, a copy of an amendment to its Articles of Incorporation authenticated by the proper office of the state or country of its incorporation and was found to conform to law.

Therefore, I issue this

CERTIFICATE OF AMENDMENT TO CERTIFICATE OF AUTHORITY

Given under my hand and the Great Seal of the State of West Virginia on this day of June 10, 2013

Natalie E Tennant

Secretary of State

FILED

JUN 10 2013

IN THE OFFICE OF SECRETARY OF STATE

Natalie E. Tennant
Secretary of State
1900 Kanawha Blvd E
Bldg 1, Suite 157-K
Charleston, WV 25305

Penney Barker, Manager
Corporations Division
Tel: (304)558-8000
Fax: (304)558-8381
Website: www.wvsos.com
E-mail: business@wvsos.com
Office Hours: Monday – Friday
8:30 a.m. – 5:00 p.m. ET

FILE ONE ORIGINAL
(Two if you want a filed stamped copy returned to you)
FEE: $25.00

APPLICATION FOR AMENDED CERTIFICATE OF AUTHORITY

****** In accordance with the provisions of the West Virginia Code, the undersigned corporation hereby **** applies for an Amended Certificate of Authority and submits the following statement:**

1. Name under which the corporation was authorized to transact business in WV: Antero Resources Appalachian Corporation

2. Date Certificate of Authority was issued in West Virginia: 6/25/2009

3. Corporate name has been changed to: Antero Resources Corporation
(Attach one Certified Copy of Name Change as filed in home State of incorporation.)

4. Name the corporation efects to use in WV: Antero Resources Corporation
(due to home state name not being available)

5. Other amendments:
(attach additional pages if necessary)

6. **Name and phone number of contact person.** (This is optional, however, if there is a problem with the filing, listing a contact person and phone number may avoid having to return or reject the document.)

Alvyn A. Schopp — (303) 357-7310
Contact Name — Phone Number

7. **Signature information** (See below *Important Legal Notice Regarding Signature):

Print Name of Signer: Alvyn A. Schopp — Title/Capacity: Authorized Person

Signature: Alvyn A. Schopp — Date: June 10, 2013

*Important Legal Notice Regarding Signature: For West Virginia Code §31D-1-129. Penalty for signing false document. Any person who signs a document he or she knows is false in any material respect and knows that the document is to be delivered to the secretary of state for filing is guilty of a misdemeanor and, upon conviction thereof, shall be fined not more than one thousand dollars or confined in the county or regional jail not more than one year, or both.

Delaware

The First State

I, JEFFREY W. BULLOCK, SECRETARY OF STATE OF THE STATE OF DELAWARE, DO HEREBY CERTIFY THE ATTACHED IS A TRUE AND CORRECT COPY OF THE CERTIFICATE OF AMENDMENT OF "ANTERO RESOURCES APPALACHIAN CORPORATION", CHANGING ITS NAME FROM "ANTERO RESOURCES APPALACHIAN CORPORATION" TO "ANTERO RESOURCES CORPORATION", FILED IN THIS OFFICE ON THE TENTH DAY OF JUNE, A.D. 2013, AT 9:37 O'CLOCK A.M.

A FILED COPY OF THIS CERTIFICATE HAS BEEN FORWARDED TO THE NEW CASTLE COUNTY RECORDER OF DEEDS.

Jeffrey W. Bullock, Secretary of State

4520810 8100

130754186

AUTHENTICATION: 0496546

DATE: 06-10-13

You may verify this certificate online at corp.delaware.gov/authver.shtml

State of Delaware
Secretary of State
Division of Corporations
Delivered 09:37 AM 06/10/2013
FILED 09:37 AM 06/10/2013
SRV 130754186 - 4520810 FILE

AMENDMENT TO THE AMENDED AND RESTATED CERTIFICATE OF INCORPORATION OF ANTERO RESOURCES APPALACHIAN CORPORATION

Antero Resources Appalachian Corporation (the "Corporation"), a corporation organized and existing under the laws of the State of Delaware, hereby certifies as follows:

1. The original Certificate of Incorporation of the Corporation was filed under the name Antero Resources Barnett Corporation with the filing of the original Certificate of Incorporation of the Corporation with the Secretary of State of the State of Delaware on March 18, 2008.

2. This Amendment to the Amended and Restated Certificate of Incorporation has been duly adopted and approved in accordance with Sections 242 of the General Corporation Law of the State of Delaware.

3. Article FIRST of the Amended and Restated Certificate of Incorporation is hereby amended to read in its entirety as follows:

FIRST. The name of the Corporation is Antero Resources Corporation.

IN WITNESS WHEREOF, the Corporation has caused this Certificate of Amendment to be executed by its duly authorized officer on the 10th day of June, 2013.

ANTERO RESOURCES APPALACHIAN CORPORATION

By: _____
Name: Alvyn A. Schopp
Title: Vice President of Accounting & Administration / Treasurer

Attachment B

Process Description

Attachment B

Process Description
Osborne Well Pad
Antero Resources Corporation
Ritchie County, West Virginia

A mixture of condensate and entrained gas from the wells enters the Facility through a number of low pressure separators where the gas phase is separated from the liquid phase. Gas Processing Unit (GPU) heaters (H001-H010) are used in conjunction with the separators to help separate the gas from the liquid phases. These heaters are fueled by a slip stream of the separated gas. The separated gas from the low pressure separators is sent to a compressor (ENG001). The compressed gas is then metered and sent to the sales gas pipeline. The separated condensate and water from the separators flow to their respective storage tanks (TANKCOND001-010 and TANKPW001-002).

The Facility has ten (10) tanks (TANKCOND001-010) on site to store condensate and two (2) tanks (TANKPW001-002) to store produced water prior to removal from the site. Flashing, working, and breathing losses from the tanks are routed to the flare (FL001) to control the emissions. The flare that will be used to control emissions is designed to achieve a VOC destruction efficiency of 98 percent.

Condensate and produced water are transported off site on an as needed basis via tanker truck. Truck loading connections are in place to pump condensate (L001) and produced water (L002) from the storage tanks into tanker trucks. Emissions from the loading operations are vented to the atmosphere.

Emissions from the Facility's emission sources were calculated using the extended analysis of the condensate from McCabe No. 3H, one of the wells in the Yolanda well Pad. This extended analysis is considered representative of the materials from Osborne Well Pad, being in the same Marcellus rock formation. Gas production analysis from Prunty No. 1H was used for fugitive calculation.

Osborne Well Pad calculation of potential to emit included all of the emission sources that belong to the same industrial grouping, are located on contiguous or adjacent properties, and are under the control of the same person. The nearest emission source that belongs to the same industrial grouping and under the control of the same person but not located on contiguous or adjacent property is the Yolanda Well Pad. This operates independently and is approximately 0.94 miles from the Facility.

Attachment C

Description of Fugitive Emissions

Attachment C

Description of Fugitive Emissions
Osborne Well Pad
Antero Resources Corporation
Ritchie County, West Virginia

Sources of fugitive emissions include loading operations, haul road emissions, equipment leaks, and pneumatic control valves. Fugitive emissions were calculated using AP-42 factors. Routine equipment leaks are assumed to be occurring continuously throughout the year. Loading operations and haul road emissions only occur when tanker trucks are onsite. The fugitives emissions summary is also located in Attachment O.

Equipment Leaks

Equipment include valves, flanges, and connectors installed in various process equipment such as gas production unit heaters, compressor, pipelines, and separators. Emissions are assumed to be occurring throughout the year. Detailed calculations are shown on Table 4.

Pneumatic Control Valves

Pneumatic control valves are part of the gas production unit heaters. These are intermittent low bleed valves and their emissions are assumed to be occurring throughout the year. Detailed calculations are shown on Table 5.

Loading Operations

Loading emissions occur when condensate and produced water are transferred out of the well site via tanker trucks. Fugitive emissions were estimated using AP-42 loading loss formula, L= 12.46*SPM/T, and Bryan & Engineering (BR&E) software known as Promax. Detailed calculations are shown in Table 8.

Haul Road Emissions

Haul road emissions are emitted when tanker trucks or service vehicles enter the Facility. The Facility is flat and unpaved. Detailed calculations are shown on Table 12.

Attachment C/O: G70-A Emissions Summary Sheet

Fugitive Emissions Data Summary Sheet

FUGITIVE EMISSIONS SUMMARY	All Regulated Pollutants Chemical Name/CAS [1]	Maximum Potential Uncontrolled Emissions [2]		Maximum Potential Controlled Emissions [3]		Est. Method Used [4]
		lb/hr	ton/yr	lb/hr	ton/yr	
Haul Road/Road Dust Emissions	n/a					
Paved Haul Roads						
Unpaved Haul Roads						
Loading/Unloading Operations	PM, PM10, PM2.5	7.8710	23.1269	3.9355	11.5635	MB
	VOCs	13.8941	5.2896	13.8941	5.2896	MB
	toluene (108883)	0.0030	0.0012	0.0030	0.0012	
	ethyl benzene (100414)	0.0017	0.0007	0.0017	0.0007	
	hexane (110543)	0.0263	0.0100	0.0263	0.0100	
	o,m,p-xylenes (95476,108383,106423)	0.0051	0.0019	0.0051	0.0019	
	CO2 Equivalent CO2 (124389), CH4	18.4985	11.0207	18.4985	11.0207	
	benzene (71432)	0.0009	0.0003	0.0009	0.0003	
	TAPs (benzene)	0.0009	0.0003	0.0009	0.0003	
Equipment Leaks (Components)	Benzene (71432)	Does not apply	0.0151	Does not apply	0.0151	MB
	Toluene (108883)		0.0854		0.0854	
	Ethyl benzene (100414)		0.0762		0.0762	
	Hexane (110543)		0.8780		0.8780	
	o,m,p-xylenes (95476,108383,106423)		0.2372		0.2372	
	CO2 Equivalent CO2 (124389)), CH4		352.7425		352.7425	
	VOCs		16.7790		16.7790	
	TAPs (benzene)		0.0151		0.0151	
Equipment Leaks (PCVs)	toluene (108883)	0.00E+00	0.00E+00	0.00E+00	0.00E+00	MB
	ethyl benzene (100414)	0.00E+00	0.00E+00	0.00E+00	0.00E+00	
	hexane (110543)	0.0136	0.0596	0.0136	0.0596	
	o,m,p-xylenes (95476,108383,106423)	0.00E+00	0.00E+00	0.00E+00	0.00E+00	
	CO2 Equivalent CO2 (124389)), CH4	9.0327	39.5633	9.0327	39.5633	
	VOCs	0.1145	0.5015	0.1145	0.5015	
	TAPs (benzene)	0.00E+00	0.00E+00	0.00E+00	0.00E+00	

1 List all regulated air pollutants. Speciate VOCs, including all HAPs. Follow chemical name with Chemical Abstracts Service (CAS) number. LIST Acids, CO, CS_2, VOCs, H_2S, Inorganics, Lead, Organics, O_3, NO, NO_2, SO_2, SO_3, all applicable Greenhouse Gases (including CO_2 and methane), etc. DO NOT LIST H_2, H_2O, N_2, O_2, and Noble Gases.

2 Give rate with no control equipment operating. If emissions occur for less than 1 hr, then record emissions per batch in minutes (e.g. 5 lb VOC/20 minute batch).

3 Give rate with proposed control equipment operating. If emissions occur for less than 1 hr, then record emissions per batch in minutes (e.g. 5 lb VOC/20 minute batch).

4 Indicate method used to determine emission rate as follows: MB = material balance; ST = stack test (give date of test); EE = engineering estimate; O = other (specify).

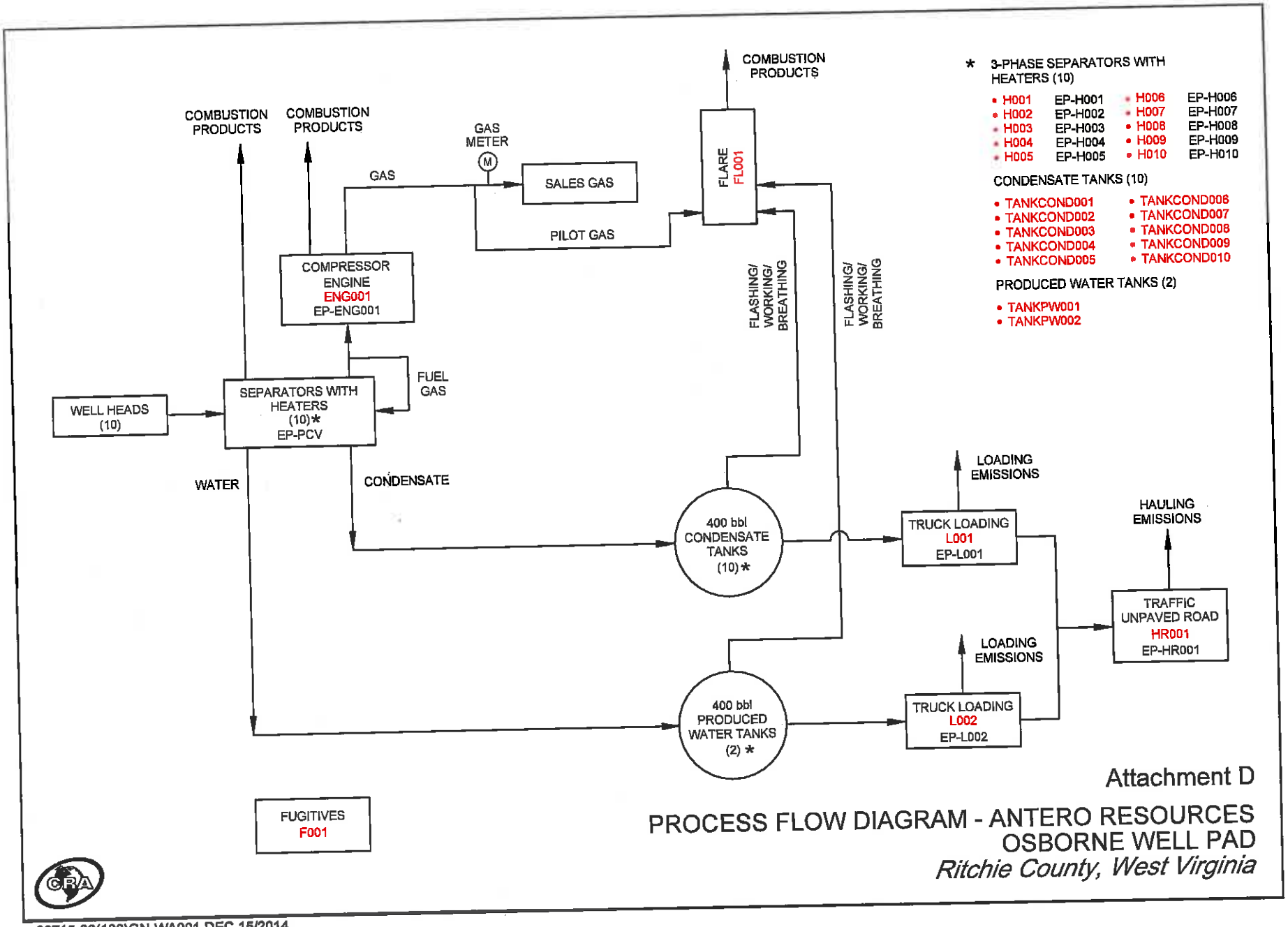

Attachment D

PROCESS FLOW DIAGRAM - ANTERO RESOURCES OSBORNE WELL PAD

Ritchie County, West Virginia

82715-00(100)GN-WA001 DEC 15/2014

Attachment E

Plot Plan

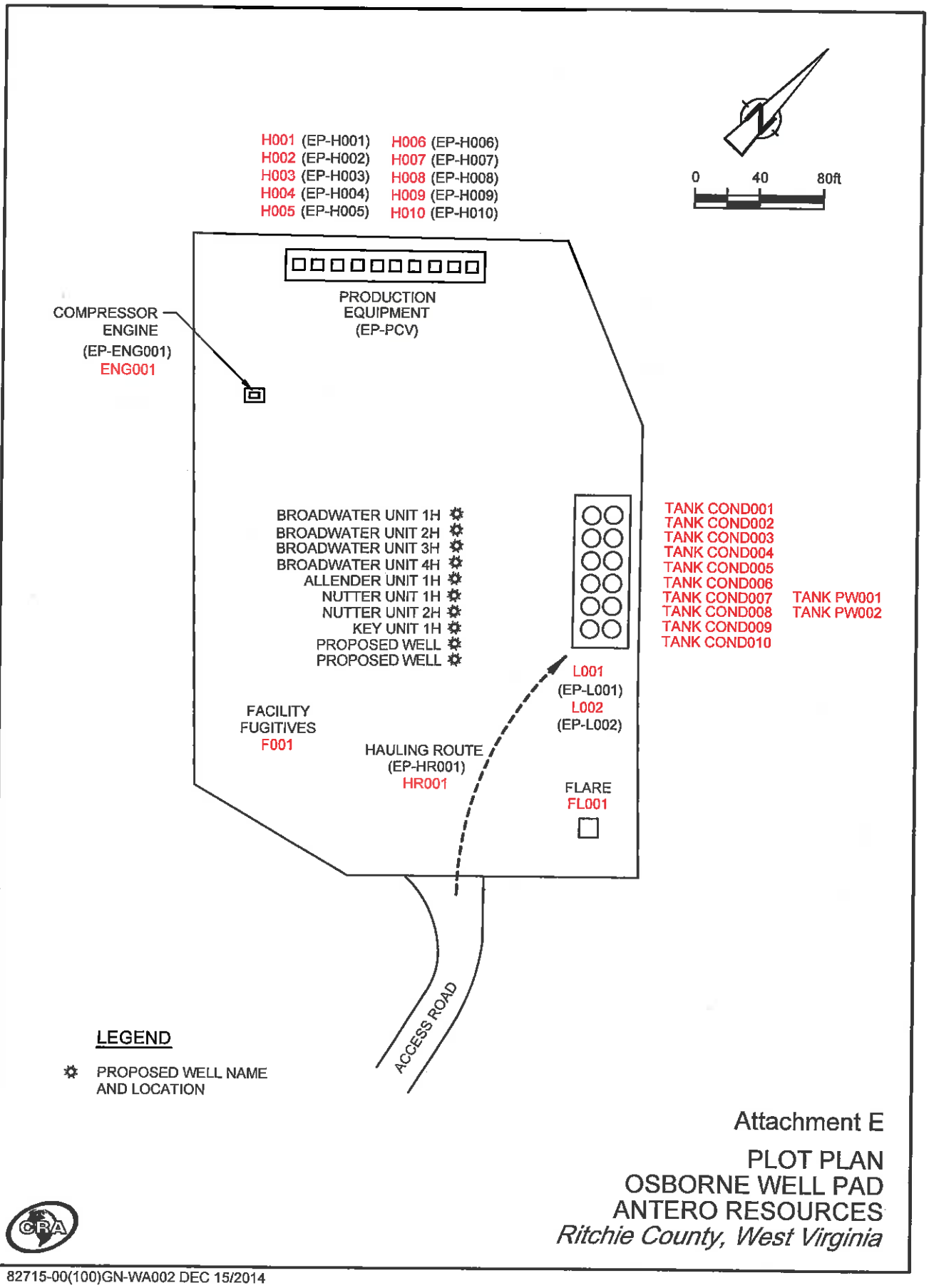

Attachment E

PLOT PLAN
OSBORNE WELL PAD
ANTERO RESOURCES
Ritchie County, West Virginia

82715-00(100)GN-WA002 DEC 15/2014

Attachment F

Area Map

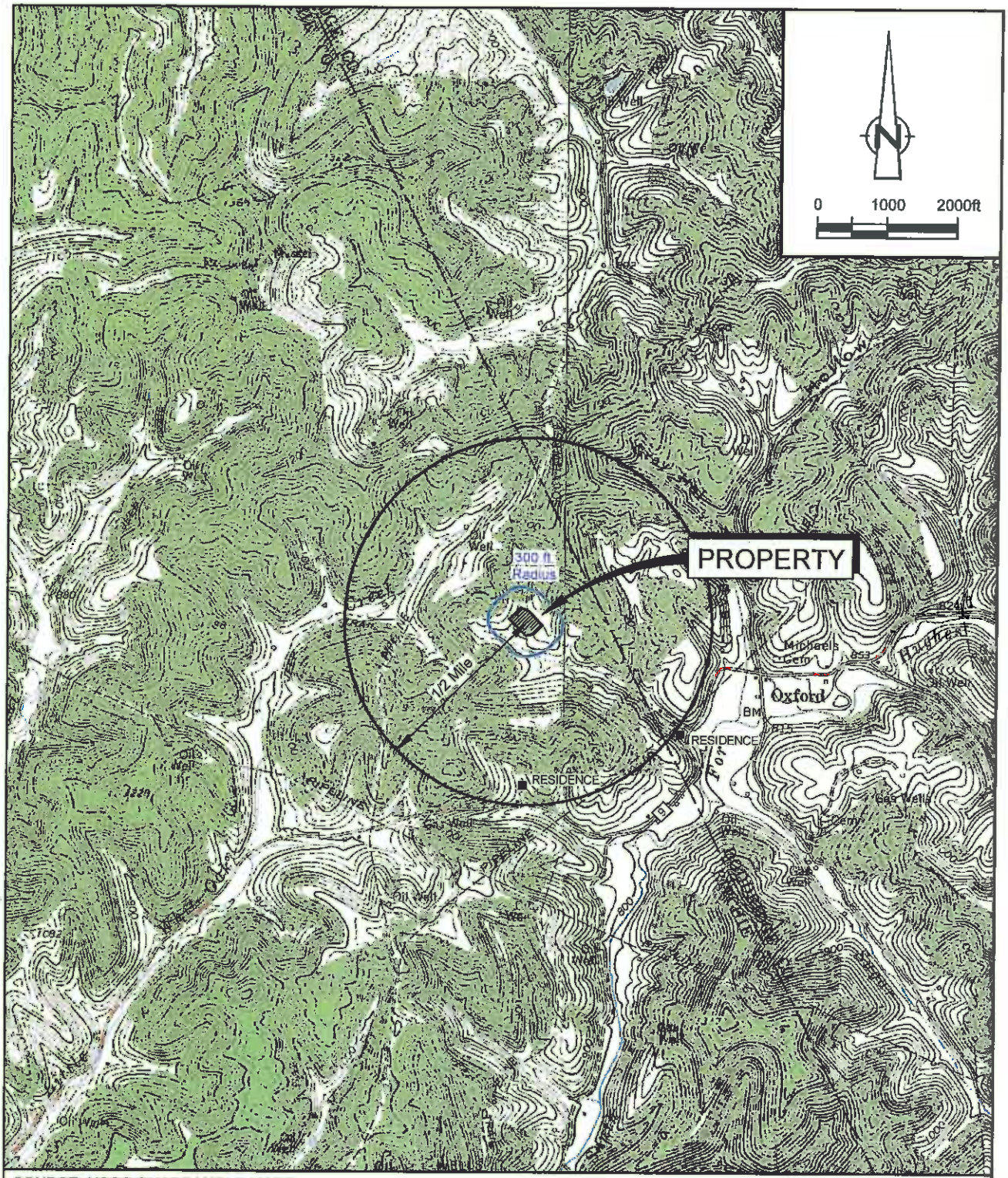

SOURCE: USGS QUADRANGLE MAPS;
PULLMAN AND OXFORD, WEST VIRGINIA

SITE COORDINATES: LAT. 39.207791, LONG. -80.876418
SITE ELEVATION: 923 ft AMSL

Attachment F

AREA MAP
OSBORNE WELL PAD
ANTERO RESOURCES
Ritchie County, West Virginia

82715-00(100)GN-WA003 DEC 15/2014

Attachment G

Emission Unit Data Sheets/G70-A Section Applicability Form

General Permit G70-A Registration
Section Applicability Form

General Permit G70-A was developed to allow qualified applicants to seek registration for a variety of sources. These sources include natural gas well affected facilities, storage tanks, natural gas-fired compressor engines (RICE), natural gas producing units, natural gas-fired in-line heaters, pneumatic controllers, heater treaters, tank truck loading, glycol dehydration units, completion combustion devices, flares, enclosed combustion devices, and vapor recovery systems. All registered facilities will be subject to Sections 1.0, 2.0, 3.0, and 4.0.

General Permit G70-A allows the registrant to choose which sections of the permit they are seeking registration under. Therefore, please mark which additional sections that you are applying for registration under. If the applicant is seeking registration under multiple sections, please select all that apply. Please keep in mind, that if this registration is approved, the issued registration will state which sections will apply to your affected facility.

Section 5	Natural Gas Well Affected Facility	☑
Section 6	Storage Vessels*	☑
Section 7	Gas Producing Units, In-Line Heaters, Heater Treaters, and Glycol Dehydration Reboilers	☑
Section 8	Pneumatic Controllers Affected Facility (NSPS, Subpart OOOO)	☐
Section 9	*Reserved*	☐
Section 10	Natural gas-fired Compressor Engine(s) (RICE) **	☑
Section 11	Tank Truck Loading Facility ***	☑
Section 12	Standards of Performance for Storage Vessel Affected Facilities (NSPS, Subpart OOOO)	☐
Section 13	Standards of Performance for Stationary Spark Ignition Internal Combustion Engines (NSPS, Subpart JJJJ)	☑
Section 14	Control Devices not subject to NSPS, Subpart OOOO	☑
Section 15	National Emissions Standards for Hazardous Air Pollutants for Stationary Reciprocating Internal Combustion Engines (40CFR63, Subpart ZZZZ)	☑
Section 16	Glycol Dehydration Units	☐
Section 17	Dehydration Units With Exemption from NESHAP Standard, Subpart HH § 63.764(d) (40CFR63, Subpart HH)	☐
Section 18	Dehydration Units Subject to NESHAP Standard, Subpart HH and Not Located Within an UA/UC (40CFR63, Subpart HH)	☐
Section 19	Dehydration Units Subject to NESHAP Standard, Subpart HH and Located Within an UA/UC (40CFR63, Subpart HH)	☐

* *Applicants that are subject to Section 6 may also be subject to Section 12 if the applicant is subject to the NSPS, Subpart OOOO control requirements or the applicable control device requirements of Section 14.*

** *Applicants that are subject to Section 10 may also be subject to the applicable RICE requirements of Section 13 and/or Section 15.*

*** *Applicants that are subject to Section 11 may also be subject to control device requirements of Section 14.*

NATURAL GAS WELL AFFECTED FACILITY DATA SHEET

Complete this data sheet if you are the owner or operator of a gas well affected facility for which construction, modification, or reconstruction commenced after August 23, 2011. This form must be completed for natural gas well affected facilities regardless of when flowback operations occur (or have occurred).

Please provide the API number(s) for each NG well at this facility:	
Broadwater Unit 1H	47-085-10186-00
Broadwater Unit 2H	47-085-10187-00
Broadwater Unit 3H	47-085-10188-00
Broadwater Unit 4H	47-085-10189-00
6 wells are not permitted yet	

Note: This is the same API well number(s) provided in the well completion notification and as provided to the WVDEP, Office of Oil and Gas for the well permit. The API number may be provided on the application without the state code (047).

Every oil and gas well permitted in West Virginia since 1929 has been issued an API (American Petroleum Institute) number. This API is used by agencies to identify and track oil and gas wells.

The API number has the following format: 047-001-00001

Where,
047 = State code. The state code for WV is 047.
001 = County Code. County codes are odd numbers, beginning with 001 (Barbour) and continuing to 109 (Wyoming).
00001= Well number. Each well will have a unique well number.

Attachment G: Emission Units Data Sheet

(includes all emission units and air pollution control devices that will be part of this permit application review, regardless of permitting status)

Emission Unit ID1	Emission Point ID2	Emission Unit Description	Year Installed/ Modified	Design Capacity	Type3 and Date of Change	Control Device 4
H001, H002, H003, H004, H005, H006, H007, H008, H009, H010	EP-H001, EP-H002, EP-H003, EP-H004, EP-H005, EP-H006, EP-H007, EP-H008, EP-H009, EP-H010	Gas Production Unit Heater	New	1.5 MMBtu/hr (each)	N/A	N/A
F001	F001	Fugitives	New	0	N/A	N/A
TANKCOND001-010	FL001	Condensate Tanks	New	400 bbl each	N/A	FL001
TANKPW001-002	FL001	PW Tanks	New	400 bbl each	N/A	FL001
L001	EP-L001	Loading (Condensate)	New	200BBL capacity (each)	N/A	N/A
L002	EP-L002	Loading (Water)	New	200BBL capacity (each)	N/A	N/A
HR001	EP-HR001	Haul Truck	New	40 ton capacity	N/A	N/A
FL001	FL001	Flare	New	138 scf/min	N/A	N/A
PCV	EP-PCV	Pneumatic CV	New	6.6 scf/day/PCV	N/A	N/A
ENG001	EP-ENG001	Compressor Engine	New	24HP	N/A	N/A

1 For Emission Units (or Sources) use the following numbering system:1S, 2S, 3S,... or other appropriate designation.
2 For Emission Points use the following numbering system:1E, 2E, 3E, ... or other appropriate designation.
3 New, modification, removal.
4 For Control Devices use the following numbering system: 1C, 2C, 3C,... or other appropriate designation.

Attachment G: Storage Vessel Emission Unit Data Sheet (Condensate)

Provide the following information for each new or modified bulk liquid storage tank.

I. GENERAL INFORMATION (required)

1. Bulk Storage Area Name	CONDTANK	2. Tank Name	TANKCOND001-010
3. Emission Unit ID number	TANKCOND001-010	4. Emission Point ID number	FL001
5. Date Installed or Modified *(for existing tanks):* New		6. Type of change: NA	
7A. Description of Tank Modification *(if applicable)* NA			
7B. Will more than one material be stored in this tank? *If so, a separate form must be completed for each material.* No			
7C. Provide any limitations on source operation affecting emissions. (production variation, etc.)			

II. TANK INFORMATION (required)

8. Design Capacity *(specify barrels or gallons).* Use the internal cross-sectional area multiplied by internal height. 400bbls			
9A. Tank Internal Diameter (ft.) 12		9B. Tank Internal Height (ft.) 20	
10A. Maximum Liquid Height (ft.) 18		10B. Average Liquid Height (ft.) 10	
11A. Maximum Vapor Space Height (ft.) 18		11B. Average Vapor Space Height (ft.) 10	
12. Nominal Capacity *(specify barrels or gallons)*. This is also known as "working volume." 400bbls			
13A. Maximum annual throughput (gal/yr)	7,665,000	13B. Maximum daily throughput (gal/day)	21,000
14. Number of tank turnovers per year	46	15. Maximum tank fill rate (gal/min)	168
16. Tank fill method: Splash Fill			
17. Is the tank system a variable vapor space system? No If yes, (A) What is the volume expansion capacity of the system (gal)? (B) What are the number of transfers into the system per year?			
18. Type of tank (check all that apply): X Fixed Roof X vertical horizontal X flat roof cone roof dome roof other (describe) External Floating Roof pontoon roof double deck roof Domed External (or Covered) Floating Roof Internal Floating Roof vertical column support self-supporting Variable Vapor Space lifter roof diaphragm Pressurized spherical cylindrical Underground Other (describe)			

III. TANK CONSTRUCTION AND OPERATION INFORMATION *(check which one applies)*

Refer to enclosed TANKS Summary Sheets

X Refer to the responses to items 19 – 26 in section VII

IV. SITE INFORMATION *(check which one applies)*

Refer to enclosed TANKS Summary Sheets

X Refer to the responses to items 27 – 33 in section VII

V. LIQUID INFORMATION *(check which one applies)*

Refer to enclosed TANKS Summary Sheets

X Refer to the responses to items 34 – 39 in section VII

Attachment G: Storage Vessel Emission Unit Data Sheet (Condensate)

Provide the following information for each new or modified bulk liquid storage tank.

VI. EMISSIONS AND CONTROL DEVICE DATA (required)

40. Emission Control Devices (check as many as apply):

Does Not Apply — Rupture Disc (psig)

Carbon Adsorption[1] — Inert Gas Blanket of _____

X Vent to Vapor Combustion Device[1] (vapor combustors, flares, thermal oxidizers) Condenser[1]

Conservation Vent (psig

Other[1] (describe) — Vacuum Setting — Pressure Setting Emergency Relief Valve (psig)

[1] Complete appropriate Air Pollution Control Device Sheet

41. Expected Emission Rate (submit Test Data or Calculations here or elsewhere in the application).

Material Name and CAS No.	Flashing Loss		Breathing Loss		Working Loss		Total Emissions Loss		
	lb/hr	tpy	lb/hr	tpy	lb/hr	tpy	lb/hr	tpy	
	Please see Tables 6 and 7								

1 EPA = EPA Emission Factor, MB = Material Balance, SS = Similar Source, ST = Similar Source Test, Throughput Data, O = Other (specify)

Remember to attach emissions calculations, including TANKS Summary Sheets and other modeling summary sheets if applicable.

SECTION VII (required if did not provide TANKS Summary Sheets)

TANK CONSTRUCTION AND OPERATION INFORMATION		
19. Tank Shell Construction: Steel		
20A. Shell Color: Green	20B. Roof Color: Green	20C. Year Last Painted: New
21. Shell Condition (if metal and unlined): No Rust		
22A. Is the tank heated? No	22B. If yes, operating temperature:	22C. If yes, how is heat provided to tank?
23. Operating Pressure Range (psig): 0		
24. Is the tank a **Vertical Fixed Roof Tank**? Yes	24A. If yes, for dome roof provide radius (ft):	24B. If yes, for cone roof, provide slop (ft/ft):
25. Complete item 25 for **Floating Roof Tanks** Does not apply		
25A. Year Internal Floaters Installed:		
25B. Primary Seal Type *(check one):* Metallic (mechanical) shoe seal Liquid mounted resilient seal		
25C. Is the Floating Roof equipped with a secondary seal? Yes No		
25D. If yes, how is the secondary seal mounted? *(check one)* Shoe Rim Other (describe):		
25E. Is the floating roof equipped with a weather shield? Yes No		
25F. Describe deck fittings:		
26. Complete the following section for **Internal Floating Roof Tanks** Does not apply		
26A. Deck Type: Bolted Welded	26B. For bolted decks, provide deck construction:	
26C. Deck seam. Continuous sheet construction:		
26D. Deck seam length (ft.):	26E. Area of deck (ft2):	26F. For column supported / 26G. For column supported

Attachment G: Storage Vessel Emission Unit Data Sheet (Condensate)

Provide the following information for each new or modified bulk liquid storage tank.

SITE INFORMATION:			
27. Provide the city and state on which the data in this section are based: Charleston, WV			
28. Daily Avg. Ambient Temperature (°F): 55.3		29. Annual Avg. Maximum Temperature (°F): 75.94	
30. Annual Avg. Minimum Temperature (°F): 65.9		31. Avg. Wind Speed (mph): 5.9	
32. Annual Avg. Solar Insulation Factor (BTU/ft2-day): 1030.235999		33. Atmospheric Pressure (psia): 14.8	
LIQUID INFORMATION:			
34. Avg. daily temperature range of bulk liquid (°F): 51.7	34A. Minimum (°F): 39.5	34B. Maximum (°F): 63.8	
35. Avg. operating pressure range of tank (psig): 0	35A. Minimum (psig): 0	35B. Maximum (psig): 0	
36A. Minimum liquid surface temperature (°F): 39.5		36B. Corresponding vapor pressure (psia):	1.9317
37A. Avg. liquid surface temperature (°F): 51.7		37B. Corresponding vapor pressure (psia):	2.4870
38A. Maximum liquid surface temperature (°F): 63.8		38B. Corresponding vapor pressure (psia):	3.1584

39. Provide the following for each liquid or gas to be stored in the tank. Add additional pages if necessary.

39A. Material name and composition:	Condensate		
39B. CAS number:	mix of HC		
39C. Liquid density (lb/gal):	6.19		
39D. Liquid molecular weight (lb/lb-mole):	124.8		
39E. Vapor molecular weight (lb/lb-mole):	40.76		
39F. Maximum true vapor pressure (psia):	3.6976		
39G. Max Reid vapor pressure (psi):	5.08000		
39H. Months Storage per year. From: To:	year round		

Attachment G: Storage Vessel Emission Unit Data Sheet (Produced Water)

Provide the following information for each new or modified bulk liquid storage tank.

I. GENERAL INFORMATION (required)

1. Bulk Storage Area Name: PWTANK	2. Tank Name: TANKPW001-002
3. Emission Unit ID number: TANKPW001-002	4. Emission Point ID number: FL001
5. Date Installed or Modified *(for existing tanks)*: New	6. Type of change: NA
7A. Description of Tank Modification *(if applicable)* NA	
7B. Will more than one material be stored in this tank? *If so, a separate form must be completed for each material.* No	
7C. Provide any limitations on source operation affecting emissions. (production variation, etc.)	

II. TANK INFORMATION (required)

8. Design Capacity *(specify barrels or gallons).* Use the internal cross-sectional area multiplied by internal height. 400bbls	
9A. Tank Internal Diameter (ft.) 12	9B. Tank Internal Height (ft.) 20
10A. Maximum Liquid Height (ft.) 18	10B. Average Liquid Height (ft.) 10
11A. Maximum Vapor Space Height (ft.) 18	11B. Average Vapor Space Height (ft.) 10
12. Nominal Capacity *(specify barrels or gallons)*. This is also known as "working volume." 400bbls	
13A. Maximum annual throughput (gal/yr) 91,980,000	13B. Maximum daily throughput (gal/day) 252,000
14. Number of tank turnovers per year 2738	15. Maximum tank fill rate (gal/min) 168
16. Tank fill method Splash Fill	
17. Is the tank system a variable vapor space system? No If yes, (A) What is the volume expansion capacity of the system (gal)? (B) What are the number of transfers into the system per year?	
18. Type of tank (check all that apply): X Fixed Roof X vertical horizontal X flat roof cone roof dome roof other (describe) External Floating Roof pontoon roof double deck roof Domed External (or Covered) Floating Roof Internal Floating Roof vertical column support self-supporting Variable Vapor Space lifter roof diaphragm Pressurized spherical cylindrical Underground Other (describe)	

III. TANK CONSTRUCTION AND OPERATION INFORMATION *(check which one applies)*

Refer to enclosed TANKS Summary Sheets

X Refer to the responses to items 19 – 26 in section VII

IV. SITE INFORMATION *(check which one applies)*

Refer to enclosed TANKS Summary Sheets

X Refer to the responses to items 27 – 33 in section VII

V. LIQUID INFORMATION *(check which one applies)*

Refer to enclosed TANKS Summary Sheets

X Refer to the responses to items 34 – 39 in section VII

Attachment G: Storage Vessel Emission Unit Data Sheet (Produced Water)

Provide the following information for each new or modified bulk liquid storage tank.

VI. EMISSIONS AND CONTROL DEVICE DATA (required)

40. Emission Control Devices (check as many as apply):

Does Not Apply — Rupture Disc (psig)

Carbon Adsorption[1] — Inert Gas Blanket of _____

X Vent to Vapor Combustion Device1 (vapor combustors, flares, thermal oxidizers) Condenser[1]

Conservation Vent (psig

Other[1] (describe) — Vacuum Setting — Pressure Setting Emergency Relief Valve (psig)

[1] Complete appropriate Air Pollution Control Device Sheet

41. Expected Emission Rate (submit Test Data or Calculations here or elsewhere in the application).

Material Name and CAS No.	Flashing Loss		Breathing Loss		Working Loss		Total Emissions Loss		
	lb/hr	tpy	lb/hr	tpy	lb/hr	tpy	lb/hr	tpy	
	Please see Tables 6 and 7								

1 EPA = EPA Emission Factor, MB = Material Balance, SS = Similar Source, ST = Similar Source Test, Throughput Data, O = Other (specify)

Remember to attach emissions calculations, including TANKS Summary Sheets and other modeling summary sheets if applicable.

SECTION VII (required if did not provide TANKS Summary Sheets)

TANK CONSTRUCTION AND OPERATION INFORMATION		
19. Tank Shell Construction: Steel		
20A. Shell Color: Green	20B. Roof Color: Green	20C. Year Last Painted: New
21. Shell Condition (if metal and unlined): No Rust		
22A. Is the tank heated? No	22B. If yes, operating temperature:	22C. If yes, how is heat provided to tank?
23. Operating Pressure Range (psig): 0		
24. Is the tank a **Vertical Fixed Roof Tank**? Yes	24A. If yes, for dome roof provide radius (ft):	24B. If yes, for cone roof, provide slop (ft/ft):
25. Complete item 25 for **Floating Roof Tanks** Does not apply		
25A. Year Internal Floaters Installed:		
25B. Primary Seal Type *(check one):* Metallic (mechanical) shoe seal Liquid mounted resilient seal		
25C. Is the Floating Roof equipped with a secondary seal? Yes No		
25D. If yes, how is the secondary seal mounted? *(check one)* Shoe Rim Other (describe):		
25E. Is the floating roof equipped with a weather shield? Yes No		
25F. Describe deck fittings:		
26. Complete the following section for **Internal Floating Roof Tanks** Does not apply		
26A. Deck Type: Bolted Welded	26B. For bolted decks, provide deck construction:	
26C. Deck seam. Continuous sheet construction:		
26D. Deck seam length (ft.):	26E. Area of deck (ft2):	26F. For column supported 26G. For column supported

Attachment G: Storage Vessel Emission Unit Data Sheet (Produced Water)

Provide the following information for each new or modified bulk liquid storage tank.

SITE INFORMATION:			
27. Provide the city and state on which the data in this section are based: Charleston, WV			
28. Daily Avg. Ambient Temperature (°F): 55.3		29. Annual Avg. Maximum Temperature (°F): 75.94	
30. Annual Avg. Minimum Temperature (°F): 65.9		31. Avg. Wind Speed (mph): 5.9	
32. Annual Avg. Solar Insulation Factor (BTU/ft2-day): 1030.235999		33. Atmospheric Pressure (psia): 14.8	
LIQUID INFORMATION:			
34. Avg. daily temperature range of bulk liquid (°F): 51.7	34A. Minimum (°F): 39.5	34B. Maximum (°F): 63.8	
35. Avg. operating pressure range of tank (psig): 0	35A. Minimum (psig): 0	35B. Maximum (psig): 0	
36A. Minimum liquid surface temperature (°F): 39.5		36B. Corresponding vapor pressure (psia):	0.1837
37A. Avg. liquid surface temperature (°F): 51.7		37B. Corresponding vapor pressure (psia):	0.2596
38A. Maximum liquid surface temperature (°F): 63.8		38B. Corresponding vapor pressure (psia):	0.3600

39. Provide the following for each liquid or gas to be stored in the tank. Add additional pages if necessary.

39A. Material name and composition:	Produced Water		
39B. CAS number:	mix of HC and water		
39C. Liquid density (lb/gal):	8.33		
39D. Liquid molecular weight (lb/lb-mole):	18.0157		
39E. Vapor molecular weight (lb/lb-mole):	18.2980		
39F. Maximum true vapor pressure (psia):	0.4467		
39G. Max Reid vapor pressure (psi):	1.02330		
39H. Months Storage per year. From: To:	year round		

Attachment G: Natural Gas Fired Fuel Burning Units

Emission Data Sheet

Complete the information on this data for each Gas Producing Unit(s), Heater Treater(s), and in-line heater(s) at the production pad. Reboiler information should be entered on the Glycol Dehydration Emission Unit Data Sheet.

Emission Unit ID #[1]	Emission Point ID#[2]	Emission Unit Description (Manufacturer / Model #)	Year Installed/ Modified	Type[3] and Date of Change	Control Device[4]	Design Heat Input (mmBtu/hr)[5]	Fuel Heating Value (Btu/scf)[6]
H001	EP-H001	Gas Production Unit Heater	New	N/A	--	1.50	1,247.06
H002	EP-H002	Gas Production Unit Heater	New	N/A	--	1.50	1,247.06
H003	EP-H003	Gas Production Unit Heater	New	N/A	--	1.50	1,247.06
H004	EP-H004	Gas Production Unit Heater	New	N/A	--	1.50	1,247.06
H005	EP-H005	Gas Production Unit Heater	New	N/A	--	1.50	1,247.06
H006	EP-H006	Gas Production Unit Heater	New	N/A	--	1.50	1,247.06
H007	EP-H007	Gas Production Unit Heater	New	N/A	--	1.50	1,247.06
H008	EP-H008	Gas Production Unit Heater	New	N/A	--	1.50	1,247.06
H009	EP-H009	Gas Production Unit Heater	New	N/A	--	1.50	1,247.06
H010	EP-H010	Gas Production Unit Heater	New	N/A	--	1.50	1,247.06
ENG001	EP-ENG001	Engine (Kubota DG972-E2)	New	N/A	--	--	1,247.06
FL001	FL001	Flare (Abutec-200)	New	N/A	FL001	18.4	1,247.06

1 Enter the appropriate Emission Unit (or Sources) identification numbers for each fuel burning unit located at the production pad. Gas Producing Unit Burners should be designated GPU-1, GPU-2, etc. Heater Treaters should be designated HT-1, HT-2, etc. Heaters or Line Heaters should be designated LH-1, LH-2, etc. For sources, use 1S, 2S, 3S...or other appropriate designation. Enter glycol dehydration unit Reboiler Vent data on the Glycol Dehydration Unit Data Sheet.

2 Enter the appropriate Emission Point identification numbers for each fuel burning unit located at the production pad. Gas Producing Unit Burners should be designated GPU-1, GPU-2, etc. Heater Treaters should be designated HT-1, HT-2, etc. Heaters or Line Heaters should be designated LH-1, LH-2, etc. For emission points, use 1E, 2E, 3E...or other appropriate designation.

3 New, modification, removal.

4 Complete appropriate air pollution control device sheet for any control device.

5 Enter design heat input capacity in mmBtu/hr.

6 Enter the fuel heating value in Btu/standard cubic foot.

Attachment G: Natural Gas-Fired Compressor Engine (RICE)

Emission Unit Data Sheet

Complete this section for any natural gas-fired reciprocating internal combustion engine.

Emission Unit (Source) ID No.		ENG001	
Emission Point ID No.		EP-ENG001	
Engine Manufacturer and Model		Engine (Kubota DG972-E2)	
Manufacturer's Rated bhp/rpm		24 HP @ 3600 rpm	
Source Status		NS	
Date Installed/Modified/Removed		2015	
Engine Manufactured/Reconstruction Date		2013	
Is this engine subject to 40CFR60, Subpart JJJJ?		Yes	
Is this a Certified Stationary Spark Ignition Engine according to 40CFR60, Subpart JJJJ? (Yes or No)		Yes	
Is this engine subject to 40CFR63, Subpart ZZZZ? (yes or no)		Yes	
Engine, Fuel and Combustion Data	Engine Type	RB4S	
	APCD Type	-	
	Fuel Type	RG	
	H2S (gr/100 scf)	0	
	Operating bhp/rpm	16.5 HP @ 2400 rpm	
	BSFC (Btu/bhp-hr)	9773	
	Fuel throughput (ft^3/hr)	193	
	Fuel throughput ($MMft^3$/yr)	1.6907	
	Operation (hrs/yr)	8760	
Reference	Potential Emissions	lbs/hr	tons/yr
MD	NO_X	0.3158	1.3831
MD	CO	5.6445	24.7228
AP	VOC	0.0071	0.0311
AP	SO_2	0.0001	0.0006
AP	PM_{10}	0.0024	0.0104
AP	Formaldehyde	0.0049	0.0215
MRR	Proposed Monitoring:	Monitor engine setting adjustments to ensure these are consistent with manufacturer's instructions.	
	Proposed Recordkeeping:	1) Maintain records of maintenance performed on engines. 2) Documentation from manufacturer that engine is certified to meet emission standards	
	Proposed Reporting:	N/A	

Attachment G: Tank Truck Loading

Emissions Unit Data Sheet

Furnish the following information for each new or modified bulk liquid transfer area or loading rack at the natural gas production pad. This form is to be used for bulk liquid transfer operations to tank trucks.

1. Emission Unit ID: L001, L002	2. Emission Point ID: EP-L001, EP-L002	3. Year Installed/ Modified: New

4. Emission Unit Description: CONDENSATE AND PRODUCED WATER

5. Loading Area Data

5A. Number of pumps: 2	5B. Number of liquids loaded: 2	5C. Maximum number of tank trucks loading at one time: 2

6. Describe cleaning location, compounds and procedure for tank trucks: For hire tank trucks are used and are cleaned at the operator's dispatch terminal. These trucks are in dedicated service and cleaned only prior to repair or leak tests. Cleaning materials include water, steam, detergent, and solvents which are applied using hand held pressurized spray nozzles.

7. Are tank trucks pressure tested for leaks at this or any other location?

X Yes No

If YES, describe: Tank trucks are pressure tested for leaks at the location of the leak testing company. Trucks are tested using EPA Method 27-Internal vapor valve test and issued certification that DOT requirements are met.

8. Projected Maximum Operating Schedule (for rack or transfer point as a whole):

Maximum	Jan. - Mar.	Apr. - June	July - Sept.	Oct. - Dec.
hours/day	14	14	14	14
days/week	7	7	7	7

9. Bulk Liquid Data *(add pages as necessary)*

Liquid Name		Condensate	Produced Water	
Max. daily throughput (1000 gal/day)		21	252	
Max. annual throughput (1000 gal/yr)		7,665.00	91,980.00	
Loading Method [1]		BF	BF	
Max. Fill Rate (gal/min)		168	168	
Average Fill Time (min/loading)		50	50	
Max. Bulk Liquid Temperature (°F)		72.1	72.1	
True Vapor Pressure [2]		3.70	0.45	
Cargo Vessel Condition [3]		U	U	
Control Equipment or Method [4]		None	None	
Minimum collection efficiency (%)		0	0	
Minimum control efficiency (%)		0	0	
Maximum Emission Rate	Loading (lb/hr)	21.36	1.16	
	Annual (ton/yr)	8.12	5.29	
Estimation Method [5]		Promax	Promax	

Notes:

1 BF = Bottom Fill SP = Splash Fill SUB = Submerged Fill

2 At maximum bulk liquid temperature

3 B = Ballasted Vessel, C = Cleaned, U = Uncleaned (dedicated service), O = other (describe)

4 List as many as apply (complete and submit appropriate *Air Pollution Control Device Sheets as Attachment "H"*):

CA = Carbon Adsorption

VB = Dedicated Vapor Balance (closed system) ECD = Enclosed Combustion Device

F = Flare

TO = Thermal Oxidation or Incineration

5 EPA = EPA Emission Factor as stated in AP-42

10. **Proposed Monitoring, Recordkeeping, Reporting, and Testing**

MONITORING	RECORDKEEPING
1) Visual inspection to ensure that loading connections from storage tanks to trucks are leak-free.	1) Maintain records of condensate transferred from storage tanks. 2) Maintain records of produced water transferred from storage tanks.
REPORTING N/A	TESTING N/A

11. Describe all operating ranges and maintenance procedures required by Manufacturer to maintain warranty: N/A

Attachment H: Air Pollution Control Device

Vapor Combustion Control Device Sheet

Complete this vapor combustion control device sheet for each enclosed combustion device, flare, thermal oxidizer, or completion combustion device that is located at the natural gas production pad for the purpose of thermally destructing waste gas to control emissions of regulated pollutants to the atmosphere.

IMPORTANT: READ THE INSTRUCTIONS ACCOMPANYING THIS FORM BEFORE COMPLETING.		
General Information		
1. Control Device ID#: FL001	2. Installation Date: New	
3. Maximum Rated Total Flow Capacity: 200,000 scfd	4. Maximum Design Heat Input: 18.4 MMBtu/hr	5. Design Heat Content: 2208 BTU/scf
Control Device Information		
6. Select the type of vapor combustion control device being used: Elevated Flare		
7. Manufacturer: Model No. Abutec-200	8. Hours of operation per year: 8760	
9. List the emission units whose emissions are controlled by this vapor combustion control device: (Emission Point ID#:)		

10. Emission Unit ID#	Emission Source Description:	Emission Unit ID#	Emission Source Description:
TANKCOND001-010	Condensate Tank		
TANKPW001-002	PW Tanks		

If this vapor combustor controls emissions from more than six emission units, please attach additional pages.

11. Assist Type	12. Flare Height (ft)	13. Tip Diameter (ft)	14. Was the design per §60.18?
Steam - Air - Pressure - X Non -	20	3.92	Yes

Waste Gas Information

15. Maximum waste gas flow rate (scfm):	16. Heat value of waste gas stream (BTU/ft3)	17. Temperature of the emissions stream (°F)	18. Exit Velocity of the emissions stream (ft/s)
36.56	1,754.10	900	5.05E-02

19. Provide an attachment with the characteristics of the waste gas stream to be burned.

Pilot Information

20. Type/Grade of pilot fuel:	21. Number of pilot lights:	22. Fuel flow rate to pilot flame per pilot (scf/hr):	23. Heat input per pilot (BTU/hr):	24. Will automatic re-ignition be used?
Natural Gas	1	12.6	12800	Yes

25. If automatic re-ignition will be used, describe the method: Based on a monitoring system

26. Describe the method of controlling flame: Flame Rectification, a thermocouple equivalent

27. Is pilot flame equipped with a monitor to detect the presence of the flame? Yes	28. If yes, what type? - Thermocouple

29. Pollutant(s) Controlled	30. % Capture Efficiency	31. Manufacturer's Guaranteed Control Efficiency (%)
F/W/B Emissions from TANKCOND	98	98
F/W/B Emissions from TANKPW	98	98

Attachment H: Air Pollution Control Device

Vapor Combustion Control Device Sheet

Complete this vapor combustion control device sheet for each enclosed combustion device, flare, thermal oxidizer, or completion combustion device that is located at the natural gas production pad for the purpose of thermally destructing waste gas to control emissions of regulated pollutants to the atmosphere.

32. Has the control device been tested by the manufacturer and certified? Yes, see spec sheet.

33. Describe all operating ranges and maintenance procedures required by the manufacturer to maintain warranty: See spec sheet for operating ranges.

MONITORING

1) Report any period when visible emissions exceeded 5 minutes during any two-hour period.
2) Monitor the presence of pilot flame at all times with the Flame rectification system, a thermocouple equivalent.
3) Monitor visible emissions from the vapor combustor.
4) Monitor throughput to the vapor combustor.

RECORDKEEPING

1) Record the times and duration of periods when the pilot flame was not present.
2) Records of throughput to the vapor combustor.
3) Records of vapor combustor malfunction or shutdown which resulted in excess emissions.
4) Records of vapor combustor inspection and maintenance activities conducted.

REPORTING

1) Report any period when visible emissions exceeded 5 minutes during any two-hour period.

34. Additional Information Attached? **YES**

Please attach a copy of manufacturer's data sheet. Please attach a copy of manufacturer's drawing.
Please attach a copy of the manufacturer's performance testing.

If any of the requested information is not available, please contact the manufacturer.

General Arrangement Drawing

NOTE: This drawing is intended for your review and approval of the general arrangement for project ABUTEC 200.Some dimensions are subject to change during the final engineering phase of this project. "As Built" drawings will be provided at engineering completion.

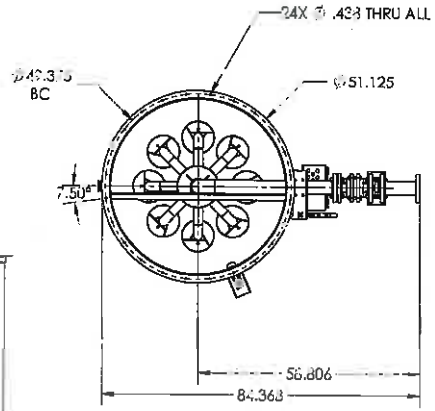

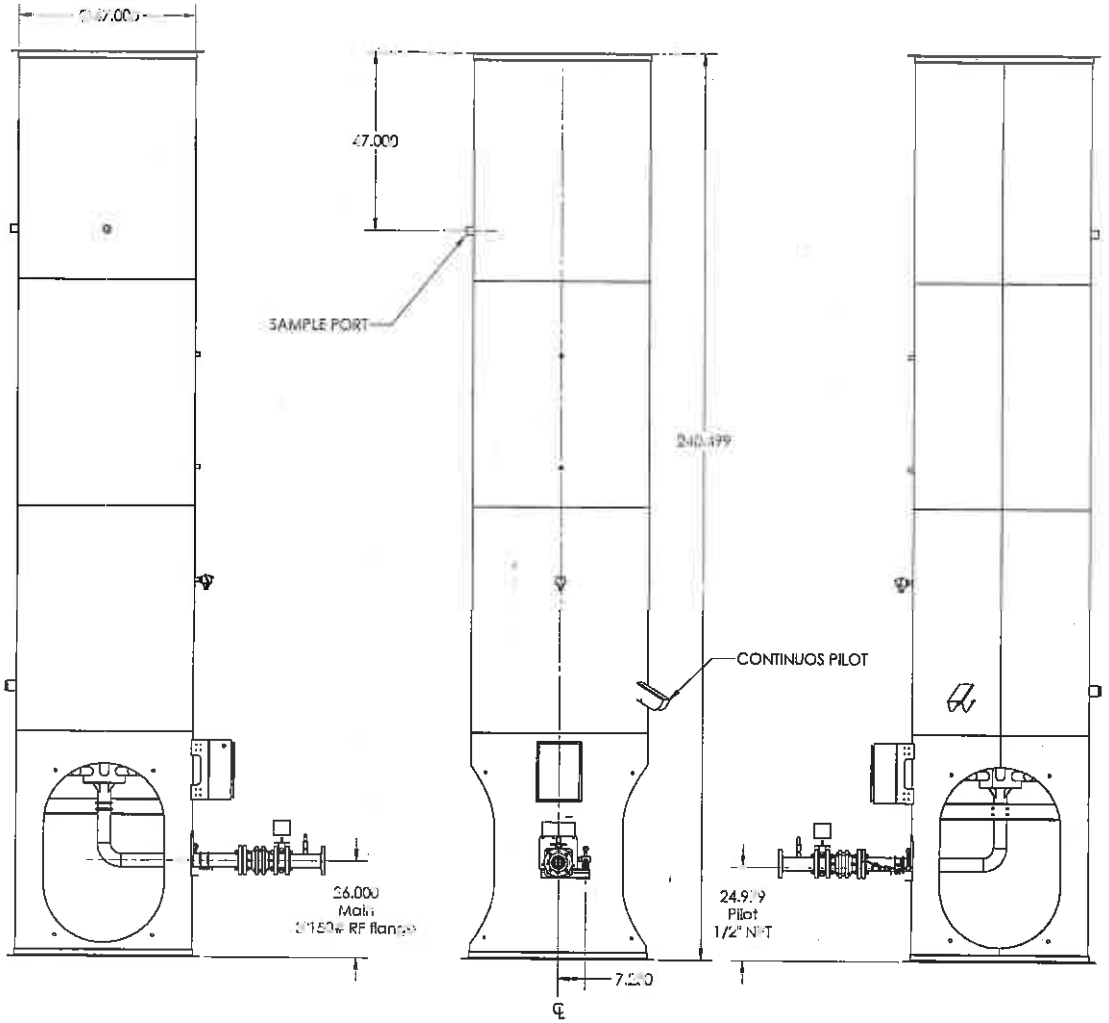

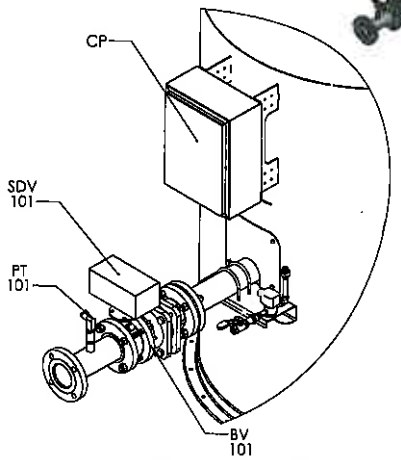

MATERIAL		ABUTEC Advanced Burner Technologies	
UNLESS OTHERWISE SPECIFIED: DIMENSIONS ARE IN INCHES TOLERANCE: FRACTIONAL ± ANGULAR: MACH ± BEND ± TWO PLACE DECIMAL ± THREE PLACE DECIMAL ±		TITLE: ABUTEC-200	
DRAWN	J.PHILLIPS	SIZE: B	DWG. NO. ABUTEC-200 GAD
CHECKED	S.EGAN		REV
ENG APPR	HVP	SCALE: 1:24	WEIGHT: 1690.38
			SHEET 1 OF 1

PROPRIETARY AND CONFIDENTIAL
ALL IDEAS, DESIGNS, ARRANGEMENTS, AND PLANS INDICATED OR REPRESENTED BY THIS DRAWING ARE OWNED BY ABUTEC LLC. AND WERE CREATED, EVOLVED, AND DEVELOPED FOR USE ON AND IN CONNECTION WITH THE SPECIFIED PROJECT. NONE SUCH IDEAS, DESIGNS, ARRANGEMENTS OR PLANS SHALL BE USED BY OR DISCLOSED TO ANY PERSON, FIRM, OR CORPORATION FOR ANY PURPOSE WHATSOEVER WITHOUT THE WRITTEN PERMISSION OF ABUTEC LLC.

Attachment I

Emission Calculations

Table 1

Facility Information
Osborne Well Pad
Ritchie County, West Virginia
Antero Resources Corporation

Oil and Gas Site General Information

Administrative Information	
Company Name	Antero Resources Corporation
Facility/Well Name	Osborne Well Pad
Nearest City/Town	White Oak
API Number/SIC Code	1311
Latitude/Longitude	39.207791, -80.876418
County	Ritchie County

Technical Information	
Max Condensate Site Throughput (bbl/day):	500
Max Produced Water Site Throughput (bbl/day):	6,000
Are there any sour gas streams at this site?	No
Is this site currently operational/producing?	No

Equipment/Processes at Site	
Equipment/Process Types	How many for this site?
Fugitives	10
IC Engines	1
Turbines	0
Diesel Engines	0
Gas Production Unit Heaters	10
Condensate Tanks	10
Produced Water Tanks	2
Miscellaneous Tanks	0
Loading Jobs	2
Glycol Units	0
Amine Units	0
Flares-Vapor Combustors	1

Table 2

Uncontrolled/Controlled Emissions Summary
Osborne Well Pad
Ritchie County, West Virginia
Antero Resources Corporation

Emission Source	VOC		NO_x		CO_{2e}		CO		SO_2		$PM_{2.5}$		PM_{10}		Lead		Total HAPs		Benzene		Xylenes		Formaldehyde	
	(lbs/hr)	(tpy/yr)	(lbs/hr)	(tpy/yr)	(lbs/hr)	(tpy/yr)	(lbs/hr)	(tpy/yr)	(lbs/hr)	(tpy/yr)	(lbs/hr)	(tpy/yr)	(lbs/hr)	(tpy/yr)	(lbs/hr)	(tpy/yr)	(lbs/hr)	(tpy/yr)	(lbs/hr)	(tpy/yr)	(lbs/hr)	(tpy/yr)	(lbs/hr)	(tpy/yr)
UNCONTROLLED (Fugitives, Storage Tanks, Gas Production Unit Heaters)																								
Fugitive Emissions (Component Count, PCV and Hauling)[1]	3.9453	17.2804			89.568	392.31							3.5419	10.4071			0.3086	1.3515	0.0035	0.0151	5.42E-02	2.37E-01		
Flashing, Working and Breathing (F/W/B) Losses[2]	123.18	539.5			887.1	3,885.3																		
Engine Emissions[3]	0.0071	0.0311	0.3158	1.3831	27.78	121.66	5.6445	24.7228	0.0001	0.0005	0.0024	0.0103	0.0023	0.0100			3.9139	17.296	0.1495	0.6549	0.1815	0.7952		
Gas Production Unit Heater Emissions[4]	0.0662	0.2898	1.2028	5.2684	1,451.97	6,359.64	1.0104	4.4254	0.0072	0.0316	0.0914	0.4004	0.0914	0.4004	6.01E-06	2.63E-05	0.0055	0.0241	0.0004	0.0017	0.0000	0.0002	0.0049	0.0215
TOTALS:	127.2030	557.1491	1.5186	6.6515	2456.3663	10758.8952	6.6549	29.1482	0.0074	0.0322	0.0938	0.4108	3.6356	10.8175	6.01E-06	2.63E-05	4.2855	18.7704	0.1534	0.6717	0.2357	1.0326	0.0058	0.0255
UNCONTROLLED (Truck Loading Emissions)																								
Truck Loading Emissions[5]	13.894	5.290			18.498	11.021											0.0370	0.0141	8.69E-04	3.37E-04	0.0051	0.0019		
CONTROLLED EMISSIONS																								
Flare Emissions (from F/W/B losses)[6]	2.4638	10.7913	0.2206	0.9664	694.0757	3040.0517	0.1853	0.8118	7.56E-06	3.31E-05	0.0126	0.0551	0.0168	0.0734	1.10E-06	4.83E-06	0.0790	0.3460	2.99E-03	1.31E-02	0.0036	0.0159	9.45E-07	4.14E-06
Controlled Fugitive Emissions from Hauling													1.7710	5.2036										
TOTALS:	2.4638	10.7913	0.2206	0.9664	694.0757	3040.0517	0.1853	0.8118	7.56E-06	3.31E-05	0.0126	0.0551	1.7877	5.2770	1.10E-06	4.83E-06	0.0790	0.3460	0.0030	0.0131	0.0036	0.0159	9.45E-07	4.14E-06
POTENTIAL TO EMIT[7]	6.4623	32.6822	1.7392	7.6179	2263.8921	9921.6778	6.8402	29.9600	0.0074	0.0323	0.1064	0.4659	1.1814	3.6874	7.12E-06	3.12E-05	0.4157	1.8346	0.0062	0.0303	0.0578	0.2552	0.0058	0.0253

Enter any notes here

1 - See Tables 4 and 5 for fugitive emission calculations; Table 12 for PM emissions from hauling.
2 - See Tables 6 and 7 for tanks emission calculations.
3 - See Table 13 for engine emissions.
4 - See Table 9 for gas production unit heater emission calculations.
5 - The maximum emission was calculated based on tank truck capacity of 200 barrels and actual fill rate of 50 minutes per tank truck. At a production rate of 500 barrels per day, VOC emissions would be 13.8941 pounds per hour when there is truck loading activity. Average hourly VOC emissions from truck loading per year is 1.2077 pound per hour.
6 - See Table 10 and 11 for flare emission calculations.
7 - The hourly potential to emit is the sum of emissions from gas production unit heaters, engine, storage tanks, fugitives and flare. Does not include emissions from loading (see footnote 5). The total TPY PTE is the sum of all emissions.
PM 10 TPY is the sum of controlled hauling and other PM10 sources.

Table 3

Permit Summary
Osborne Well Pad
Ritchie County, West Virginia
Antero Resources Corporation

Pollutant		Emissions			Threshold Exceeded?	
		Uncontrolled	Controlled	Threshold	Uncontrolled	Controlled
VOC	lbs/hr	127.2030	6.4823	6	**Yes**	**Yes**
	tons/yr	562.4388	33.6822	10	**Yes**	**Yes**
NO_x	lbs/hr	1.5186	1.7392	6		
	tons/yr	6.6515	7.6179	10		
CO	lbs/hr	6.6549	6.8402	6	**Yes**	**Yes**
	tons/yr	29.1482	29.9600	10	**Yes**	**Yes**
SO_2	lbs/hr	0.0074	0.0074	6		
	tons/yr	0.0322	0.0323	10		
$PM_{2.5}$	lbs/hr	9.38E-02	1.06E-01	6		
	tons/yr	4.11E-01	4.66E-01	10		
PM_{10}	lbs/hr	3.6356	1.8814	6		
	tons/yr	10.8175	5.6874	10	**Yes**	
Lead	lbs/hr	6.01E-06	7.12E-06	6		
	tons/yr	2.63E-05	3.12E-05	10		
Total HAPs	lbs/hr	4.2855	0.4157	2	**Yes**	
	tons/yr	18.7844	1.8349	5	**Yes**	
Total TAPs	lbs/hr	0.1592	0.0127	1.14		
n-Hexane	lbs/hr	3.5637	0.3280			
	tons/yr	15.5038	1.3318			
Toluene	lbs/hr	0.2652	0.0276			
	tons/yr	1.1496	0.1085			
Ethylbenzene	lbs/hr	0.0926	0.0206			
	tons/yr	0.3987	0.0833			
Xylenes	lbs/hr	0.2408	0.0629			
	tons/yr	1.0345	0.2552			
Benzene	lbs/hr	0.1542	0.0077			
	tons/yr	0.6721	0.0303			

Enter any notes here:	1. Emissions are based on 98% Flare DRE operating 100% of the time. 2. Please see Attachment C/O- Fugitive Emissions Data Summary Sheet and Attachment O – Emission Points Data Summary Sheet for sitewide sources and breakdown of emission quantities.

Table 4

Fugitive Emissions
Osborne Well Pad
Ritchie County, West Virginia
Antero Resources Corporation

VOC Type	Condensate VOC
Emission Type	Steady State (continuous)

Gas Weight Fraction From Analysis	VOC frac	0.191
	Benzene frac	0.000
	Toluene	0.000
	Ethylbenzene	0.000
	Xylenes	0.000
	n-Hexane	0.023
	Methane	0.603

Gas					
Number	Component	Pollutant	Emission Factor (kg/hr of THC per component)	kg/hr	lb/yr
500	Valves	Gas VOC	0.004500	0.43	8,280.76
		Non VOC	0.004500	1.82	35,081.24
590	Connectors	VOC	0.000200	0.02	434.28
		Non-VOC	0.000200	0.10	1,839.82
130	Flanges	VOC	0.000390	0.01	186.59
		Non-VOC	0.000390	0.04	790.50
			Total VOCs:	0.46	8,901.63
			Total THC:	2.42	46,613.19

Light Liquid Weight Fraction From Analysis	VOC frac	0.984
	Benzene frac	0.001
	Toluene	0.007
	Ethylbenzene	0.006
	Xylenes	0.019
	n-hexane	0.028
	Methane	0.005

Light Liquid					
Number	Component	Pollutant	Emission Factor (kg/hr of THC per component)	kg/hr	lb/yr
520	Valves	Light Liquid VOC	0.002500	1.28	24,656.30
		Light Liquid Non-VOC		0.02	397.30
			Total VOC:	1.28	24,656.30
			Total THC:	1.30	25,053.60

Fugitive Total Emissions			
	Annual Emissions (lb/yr)	Annual Emissions (lb/hr)	Annual Emissions (tpy)
VOC	33,557.93	3.83	16.78
Ethylbenzene		0.02	0.08
Toluene		0.02	0.09
Xylenes		0.05	0.24
n-Hexane		0.20	0.88
TAPs (Benzene)		0.00	0.02
HAPs		0.29	1.29
CO_{2e}	705,485.08	80.53	352.74

Enter Notes Here	Fugitive emissions based on an estimated component count Global Warming Potentials from EPA site Reference to Emission factors used: 1. Emission factors are for oil and gas production facilities (not refineries) come from the EPA's "Protocol for Equipment Leak Emission Estimates" November 1995, EPA 4531, R-95-017, Table 2-4. 2. Percent of speciated VOCs used in fugitive calculations are based on the total hydrocarbons, not of the total sample.

Table 5

Pneumatic Control Valve Emissions
Osborne Well Pad
Ritchie County, West Virginia
Antero Resources Corporation

Number of PCVs	40
Bleed Rate (scf/day/PCV)	6.6
Total Bleed Rate (scf/day)	264

Component	Mol%	Molecular Weight (lb/lb-mole)	Component Flow (scf/day)	Component Moles (lb-moles)	Component Emissions (lbs/day)	(lbs/hr)	(tons/year)
H2S	0	34.08	0	0.00	0.00	0.00	0.00
Nitrogen	0.4946	14.01	1.305744	0.00	0.05	0.00	0.01
Carbon Dioxide	0.1467	44.01	0.387288	0.00	0.04	0.00	0.01
Methane	77.6927	16.04	205.108728	0.54	8.67	0.36	1.58
Ethane	14.1987	30.07	37.484568	0.10	2.97	0.12	0.54
Propane	4.4938	44.1	11.863632	0.03	1.38	0.06	0.25
Isobutane	0.5666	58.12	1.495824	0.00	0.23	0.01	0.04
n-Butane	1.1838	58.12	3.125232	0.01	0.48	0.02	0.09
Isopentane	0.3749	72.15	0.989736	0.00	0.19	0.01	0.03
n-Pentane	0.2914	72.15	0.769296	0.00	0.15	0.01	0.03
2-Methylpentane	0	86.18	0	0.00	0.00	0.00	0.00
3-Methylpentane	0	86.18	0	0.00	0.00	0.00	0.00
n-Hexane	0.5451	86.18	1.439064	0.00	0.33	0.01	0.06
Methylcyclopentane	0	84.16	0	0.00	0.00	0.00	0.00
Benzene	0	78.11	0	0.00	0.00	0.00	0.00
2-Methylhexane	0	100.2	0	0.00	0.00	0.00	0.00
3-Methylhexane	0	100.2	0	0.00	0.00	0.00	0.00
Heptane	0	100.21	0	0.00	0.00	0.00	0.00
Methylcyclohexane	0	98.186	0	0.00	0.00	0.00	0.00
Toluene	0	92.14	0	0.00	0.00	0.00	0.00
Octane	0	114.23	0	0.00	0.00	0.00	0.00
Ethylbenzene	0	106.17	0	0.00	0.00	0.00	0.00
m & p-Xylene	0	106.16	0	0.00	0.00	0.00	0.00
o-Xylene	0	106.16	0	0.00	0.00	0.00	0.00
Nonane	0	128.2	0	0.00	0.00	0.00	0.00
C10+	0	174.28	0	0.00	0.00	0.00	0.00

	lb/hr	tpy
VOC Emissions	0.1145	0.5015
Benzene Emissions	0.0000	0.0000
Toluene Emissions	0.0000	0.0000
Ethylbenzene Emissions	0.0000	0.0000
Xylene Emissions	0.0000	0.0000
n-Hexane Emissions	0.0136	0.0596
HAPs Emissions	0.0136	0.0596
T4Ps Emissions	0.0000	0.0000
CO_2 emissions	9.0327	39.5633

Enter any notes here	1. PCV bleed rate obtained from the user manual for PCV http://issuu.com/rmcprocesscontrols/docs/mizer-pilot-operation--parts---installation-manual 2. Emissions per hour= Mol % x no. of PCV x bleed rate x MW / 379.48 / 24

Table 6

Uncontrolled Flashing Emissions
Osborne Well Pad
Ritchie County, West Virginia
Antero Resources Corporation

# Hours Operational	8760

	Condensate Tank Flashing Losses			Produced Water Tank Flashing Losses		
	Vapor Mass Fraction	Flashing Losses		Vapor Mass Fraction	Flashing Losses	
	wt%	lbs/hr	tpy	wt%	lbs/hr	tpy
Water	0.2247	0.4010	1.7562	2.6212	0.0000	0.0000
H2S	0.0000	0.0000	0.0000	0.0000	0.0000	0.0000
Nitrogen	0.0199	0.0354	0.1552	0.1336	0.0284	0.1243
Carbon Dioxide	0.2097	0.3741	1.6386	1.7186	0.3649	1.5982
Methane	12.9105	23.0358	100.8969	56.8055	12.0608	52.8264
Ethane	23.3931	41.7396	182.8194	22.3590	4.7472	20.7928
Propane	24.9515	44.5202	194.9983	10.7469	2.2818	9.9941
Isobutane	5.7594	10.2763	45.0104	0.6158	0.1307	0.5727
n-Butane	12.3985	22.1222	96.8953	2.4667	0.5237	2.2939
Isopentane	4.8581	8.6681	37.9662	0.5909	0.1255	0.5495
n-Pentane	6.8665	12.2517	53.6624	0.7898	0.1677	0.7345
2-Methylpentane	1.4489	2.5853	11.3236	0.0766	0.0163	0.0712
3-Methylpentane	0.8475	1.5122	6.6233	0.1161	0.0246	0.1080
n-Hexane	1.8340	3.2724	14.3331	0.0768	0.0163	0.0714
Methylcyclopentane	0.4037	0.7203	3.1548	0.1486	0.0316	0.1382
Benzene	0.0709	0.1265	0.5542	0.1062	0.0225	0.0987
2-Methylhexane	0.5343	0.9533	4.1757	0.0248	0.0053	0.0231
3-Methylhexane	0.4281	0.7638	3.3453	0.0207	0.0044	0.0192
Heptane	0.9475	1.6907	7.4051	0.0480	0.0102	0.0446
Methylcyclohexane	0.6736	1.2020	5.2646	0.1677	0.0356	0.1560
Toluene	0.1156	0.2062	0.9033	0.1639	0.0348	0.1524
Octane	0.7952	1.4188	6.2145	0.0239	0.0051	0.0223
Ethylbenzene	0.0348	0.0622	0.2724	0.0492	0.0104	0.0458
m & p-Xylene	0.0448	0.0800	0.3505	0.0626	0.0133	0.0582
o-Xylene	0.0411	0.0733	0.3212	0.0583	0.0124	0.0542
Nonane	0.1843	0.3288	1.4400	0.0086	0.0018	0.0080
C10+	0.0038	0.0067	0.0294	0.0001	0.0000	0.0001
Total VOCs	63.242	112.84	494.2	16.362	3.4740	15.2159
Total CO_{2e}		576.27	2,524.1		301.89	1,322.3
Total TAPs (Benzene)		0.1265	0.5542		0.0225	0.0987
Toluene		0.2062	0.9033		0.0348	0.1524
Ethylbenzene		0.0622	0.2724		0.0104	0.0458
Xylenes		0.1534	0.6717		0.0257	0.1124
n-Hexane		3.272	14.333		0.0163	0.0714
Total HAPs		3.821	16.735		0.1097	0.4807
Total	100.00	178.43	781.5	100.00	20.675	90.56

Enter any notes here:	Vapor mass fractions and Flashing losses from Promax output

Table 7

Uncontrolled Working and Breathing Losses
Osborne Well Pad
Ritchie County, West Virginia
Antero Resources Corporation

Condensate Tank Information	
Number of Tanks	10
Maximum Working Losses (lbs/hr)	6.4595
Maximum Breathing Losses (lbs/hr)	4.1015

	Condensate Tank W/B Losses						
	Vapor Mass Fraction	Working Losses		Breathing Losses		Max W/B Losses	
	wt%	lbs/hr	tpy	lbs/hr	tpy	lbs/hr	tpy
H2S	0.0000	0.0000	0.0000	0.0000	0.0000	0.0000	0.0000
Nitrogen	0.0011	0.0001	0.0003	0.0000	0.0002	0.0001	0.0005
Carbon Dioxide	0.2850	0.0184	0.0806	0.0117	0.0512	0.0301	0.1318
Methane	3.2743	0.2115	0.9264	0.1343	0.5882	0.3458	1.5146
Ethane	31.3978	2.0281	8.8833	1.2878	5.6405	3.3159	14.5238
Propane	28.3554	1.8316	8.0225	1.1630	5.0940	2.9946	13.1165
Isobutane	6.2005	0.4005	1.7543	0.2543	1.1139	0.6548	2.8682
n-Butane	13.1249	0.8478	3.7134	0.5383	2.3579	1.3861	6.0713
Isopentane	4.9558	0.3201	1.4021	0.2033	0.8903	0.5234	2.2924
n-Pentane	6.9090	0.4463	1.9548	0.2834	1.2412	0.7297	3.1959
2-Methylpentane	1.4323	0.0925	0.4052	0.0587	0.2573	0.1513	0.6626
3-Methylpentane	0.8356	0.0540	0.2364	0.0343	0.1501	0.0882	0.3865
n-Hexane	0.1229	0.0079	0.0348	0.0050	0.0221	0.0130	0.0569
Methylcyclopentane	0.3704	0.0239	0.1048	0.0152	0.0665	0.0391	0.1713
Benzene	0.0041	0.0003	0.0011	0.0002	0.0007	0.0004	0.0019
2-Methylhexane	0.0340	0.0022	0.0096	0.0014	0.0061	0.0036	0.0157
3-Methylhexane	0.4099	0.0265	0.1160	0.0168	0.0736	0.0433	0.1896
Heptane	0.8370	0.0541	0.2368	0.0343	0.1504	0.0884	0.3872
Methylcyclohexane	0.5978	0.0386	0.1691	0.0245	0.1074	0.0631	0.2765
Toluene	0.0142	0.0009	0.0040	0.0006	0.0026	0.0015	0.0066
Octane	0.6660	0.0430	0.1884	0.0273	0.1196	0.0703	0.3081
Ethylbenzene	0.0080	0.0005	0.0023	0.0003	0.0014	0.0008	0.0037
m & p-Xylene	0.0133	0.0009	0.0038	0.0005	0.0024	0.0014	0.0061
o-Xylene	0.0105	0.0007	0.0030	0.0004	0.0019	0.0011	0.0049
Nonane	0.1379	0.0089	0.0390	0.0057	0.0248	0.0146	0.0638
C10+	0.0020	0.0001	0.0006	0.0001	0.0004	0.0002	0.0009
Total VOCs	65.042	4.2014	18.402	2.6677	11.6845	6.8691	30.087
Total CO_{2e}		5.3060	23.2404	3.3691	14.7567	8.6751	37.997
Total TAPs (Benzene)		0.0003	0.0011	0.0002	0.0007	0.0004	0.0019
Toluene		0.0009	0.0040	0.0006	0.0026	0.0015	0.0066
Ethylbenzene		0.0005	0.0023	0.0003	0.0014	0.0008	0.0037
Xylenes		0.0015	0.0067	0.0010	0.0043	0.0025	0.0110
n-Hexane		0.0079	0.0348	0.0050	0.0221	0.0130	0.0569
Total HAPs		0.0112	0.0490	0.0071	0.0311	0.0183	0.0801
Total	100.00	6.4595	28.2927	4.1015	17.9647	10.5611	46.257

Table 7

Uncontrolled Working and Breathing Losses
Osborne Well Pad
Ritchie County, West Virginia
Antero Resources Corporation

Produced Water Tank Information	
Number of Tanks	2
Maximum Working Losses (lbs/hr)	0.2620
Maximum Breathing Losses (lbs/hr)	0.0082

	Produced Water Tank W/B Losses						
	Vapor Mass Fraction	Working Losses		Breathing Losses		Max W/B Losses	
	wt%	lbs/hr	tpy	lbs/hr	tpy	lbs/hr	tpy
H2S	0.0000	0.0000	0.0000	0.0000	0.0000	0.0000	0.0000
Nitrogen	0.0027	0.0000	0.0000	0.0000	0.0000	0.0000	0.0000
Carbon Dioxide	2.3461	0.0061	0.0269	0.0002	0.0008	0.0063	0.0278
Methane	3.1984	0.0084	0.0367	0.0003	0.0011	0.0086	0.0378
Ethane	1.1616	0.0030	0.0133	0.0001	0.0004	0.0031	0.0137
Propane	0.1361	0.0004	0.0016	0.0000	0.0000	0.0004	0.0016
Isobutane	0.0010	0.0000	0.0000	0.0000	0.0000	0.0000	0.0000
n-Butane	0.0059	0.0000	0.0001	0.0000	0.0000	0.0000	0.0001
Isopentane	0.0004	0.0000	0.0000	0.0000	0.0000	0.0000	0.0000
n-Pentane	0.0003	0.0000	0.0000	0.0000	0.0000	0.0000	0.0000
2-Methylpentane	0.0000	0.0000	0.0000	0.0000	0.0000	0.0000	0.0000
3-Methylpentane	0.0000	0.0000	0.0000	0.0000	0.0000	0.0000	0.0000
n-Hexane	0.0000	0.0000	0.0000	0.0000	0.0000	0.0000	0.0000
Methylcyclopentane	0.0001	0.0000	0.0000	0.0000	0.0000	0.0000	0.0000
Benzene	0.0001	0.0000	0.0000	0.0000	0.0000	0.0000	0.0000
2-Methylhexane	0.0000	0.0000	0.0000	0.0000	0.0000	0.0000	0.0000
3-Methylhexane	0.0000	0.0000	0.0000	0.0000	0.0000	0.0000	0.0000
Heptane	0.0000	0.0000	0.0000	0.0000	0.0000	0.0000	0.0000
Methylcyclohexane	0.0000	0.0000	0.0000	0.0000	0.0000	0.0000	0.0000
Toluene	0.0001	0.0000	0.0000	0.0000	0.0000	0.0000	0.0000
Octane	0.0000	0.0000	0.0000	0.0000	0.0000	0.0000	0.0000
Ethylbenzene	0.0000	0.0000	0.0000	0.0000	0.0000	0.0000	0.0000
m & p-Xylene	0.0000	0.0000	0.0000	0.0000	0.0000	0.0000	0.0000
o-Xylene	0.0000	0.0000	0.0000	0.0000	0.0000	0.0000	0.0000
Nonane	0.0000	0.0000	0.0000	0.0000	0.0000	0.0000	0.0000
C10+	0.0000	0.0000	0.0000	0.0000	0.0000	0.0000	0.0000
Total VOCs	0.1440	0.0004	0.0017	0.0000	0.0001	0.0004	0.0017
Total CO_{2e}		0.2156	0.9444	0.0067	0.0295	0.2223	0.9739
Total TAPs (Benzene)		0.0000	0.0000	0.0000	0.0000	0.0000	0.0000
Toluene		0.0000	0.0000	0.0000	0.0000	0.0000	0.0000
Ethylbenzene		0.0000	0.0000	0.0000	0.0000	0.0000	0.0000
Xylenes		0.0000	0.0000	0.0000	0.0000	0.0000	0.0000
n-Hexane		0.0000	0.0000	0.0000	0.0000	0.0000	0.0000
Total HAPs		0.0000	0.0000	0.0000	0.0000	0.0000	0.0000
Total	100.00	0.2620	1.1474	0.0082	0.0358	0.2701	1.1832

Enter any notes here	Vapor mass fractions, working losses and breathing losses from Promax output

Table 8

Loading Emissions
Osborne Well Pad
Ritchie County, West Virginia
Antero Resources Corporation

Annual Loading	Oil Truck Loading	Water Truck Loading
RVP	5.08	1.0233
Annual Average Temp (F)	72.1	72.1
S (saturation factor)	0.6	0.6
P (true vapor pressure)	3.70	0.45
M (MW of vapor)	40.76	18.30
Collection Efficiency (%)	0	0
Loading Loss (lb/10^3 gal)*	2.12	0.11
Maximum Throughput (gallons/hr)	10,080	10,080
Average Throughput (gallons/yr)	7,665,000	91,980,000
Loading Emissions (lbs/hr)	21.36	1.16
Loading Emissions (tpy)	8.12	5.29

	Condensate Tank Loading Losses			Produced Water Tank Loading Losses		
	Vapor Mass Fraction	Loading Losses		Vapor Mass Fraction	Loading Losses	
	wt%	lbs/hr	tpy	wt%	lbs/hr	tpy
H2S	0.0000	0.00	0.00	0.0000	0.00E+00	0.00E+00
Nitrogen	0.0011	0.00	0.00	0.0027	3.14E-05	1.43E-04
Carbon Dioxide	0.2850	0.06	0.02	2.3461	2.72E-02	1.24E-01
Methane	3.2743	0.70	0.27	3.1984	3.70E-02	1.69E-01
Ethane	31.3978	6.71	2.55	1.1616	1.35E-02	6.14E-02
Propane	28.3554	6.06	2.30	0.1361	1.58E-03	7.19E-03
Isobutane	6.2005	1.32	0.50	0.0010	1.13E-05	5.16E-05
n-Butane	13.1249	2.80	1.07	0.0059	6.82E-05	3.11E-04
Isopentane	4.9558	1.06	0.40	0.0004	4.09E-06	1.87E-05
n-Pentane	6.9090	1.48	0.56	0.0003	3.99E-06	1.82E-05
2-Methylpentane	1.4323	0.31	0.12	0.0000	7.39E-08	3.37E-07
3-Methylpentane	0.8356	0.18	0.07	0.0000	2.71E-07	1.24E-06
n-Hexane	0.1229	0.03	0.01	0.0000	2.87E-09	1.31E-08
Methylcyclopentane	0.3704	0.08	0.03	0.0001	7.47E-07	3.41E-06
Benzene	0.0041	0.00	0.00	0.0001	1.64E-06	7.48E-06
2-Methylhexane	0.0340	0.01	0.00	0.0000	3.92E-10	1.79E-09
3-Methylhexane	0.4099	0.09	0.03	0.0000	4.90E-09	2.23E-08
Heptane	0.8370	0.18	0.07	0.0000	8.34E-09	3.80E-08
Methylcyclohexane	0.5978	0.13	0.05	0.0000	1.80E-07	8.21E-07
Toluene	0.0142	0.00	0.00	0.0001	1.22E-06	5.56E-06
Octane	0.5660	0.14	0.05	0.0000	8.10E-10	3.70E-09
Ethylbenzene	0.0080	0.00	0.00	0.0000	2.06E-07	9.38E-07
m & p-Xylene	0.0133	0.00	0.00	0.0000	2.92E-07	1.33E-06
o-Xylene	0.0105	0.00	0.00	0.0000	2.84E-07	1.30E-06
Nonane	0.1379	0.03	0.01	0.0000	1.37E-10	6.24E-10
C10+	0.0020	0.00	0.00	0.0000	2.10E-15	9.56E-15
Total VOCs	65.0417	13.892	5.282	0.1440	1.67E-03	7.61E-03
Total CO_{2e}		17.545	6.6708		0.9534	4.3499
Total TAPs (Benzene)		0.0009	0.0003		0.0000	0.0000
Toluene		0.0030	0.0012		0.0000	0.0000
Ethylbenzene		0.0017	0.0007		0.0000	0.0000
Xylenes		0.0051	0.0019		0.0000	0.0000
n-Hexane		0.0263	0.0100		0.0000	0.0000
Total HAPs		0.0370	0.0141		0.0000	0.0000
Total	100.0000	21.3592	8.1210	100.0000	1.1584	5.2851

Enter any notes here
Vapor mass fractions and loading losses from Promax output
Using equation L_L = 12.46 SPM/T from AP-42, Chapter 5, Section 5.2-4
MW was obtained by Promax; RVP was taken from laboratory reports
Annual Average Temp (F) obtained from Charleston, WV (preset in Promax)
S (saturation factor) is based on submerged loading, dedicated service as it was most representative
True vapor pressure (TVP) equation from AP-42, Chapter 7, Figure 7.1-13b
Loading emissions are vented to the atmosphere.

Table 9

Gas Production Unit Heater Emissions
Osborne Well Pad
Ritchie County, West Virginia
Antero Resources Corporation

Number of Units	10
GPU Heater Rating (MMBtu/hr)	1.50
Operating hours/year	8760
Fuel Heat Value (Btu/scf)	1,247

Pollutant	Emission Factors (lb/MMscf)	lb/hr	tpy
NOx	100	1.203	5.268
CO	84	1.010	4.425
CO_2	120,000	1443.395	6322.070
Lead	0.0005	6.01E-06	2.63E-05
N_2O	2.2	0.026	0.116
PM (Total)	7.6	0.091	0.400
SO_2	0.6	0.007	0.032
TOC	11	0.132	0.580
Methane	2.3	0.028	0.121
VOC	5.5	0.066	0.290
HAPS			
2-Methylnaphthalene	2.40E-05	2.89E-07	1.26E-06
Benzene	2.10E-03	2.53E-05	1.11E-04
Dichlorobenzene	1.20E-03	1.44E-05	6.32E-05
Fluoranthene	3.00E-06	3.61E-08	1.58E-07
Fluorene	2.80E-06	3.37E-08	1.48E-07
Formaldehyde	7.50E-02	9.02E-04	3.95E-03
Hexane	1.80E+00	2.17E-02	9.48E-02
Naphthalene	6.10E-04	7.34E-06	3.21E-05
Phenanathrene	1.70E-05	2.04E-07	8.96E-07
Toluene	3.40E-03	4.09E-05	1.79E-04

	lb/hr	tpy
TOTAL Uncontrolled VOC	0.066	0.290
TOTAL Uncontrolled HAPs	0.023	0.099
TOTAL Uncontrolled TAPs (Benzene)	0.000	0.000
TOTAL Uncontrolled TAPs (Formaldehyde)	0.001	0.004
TOTAL CO_{2e} Emissions	1,451.97	6,359.64

Enter any notes here:
All Emission Factors based off AP-42 Sec 1.4 Natural Gas Combustion

Table 10

Flare Emissions
Osborne Well Pad
Ritchie County, West Virginia
Antero Resources Corporation

General Information	
Unit Name	FL001

Pollutant	Emission Factor (lb/Mmscf)
NOx	100
CO	84
PM10	7.6
PM2.5	5.7
SO_2	0.6
CO_2	120,000
VOC	5.5
benzene	2.10E-03
Hexane	1.80E+00
Toluene	3.40E-03
Formaldehyde	7.50E-02
N_2O	2.20
Lead	5.00E-04

Constants	
Btu/MMBtu	1,000,000
scf/MMscf	1,000,000
lb/ton	2,000
H_2S molecular weight	34.08
SO_2 molecular weight	64.06
seconds/hour	3,600
inches/ft	12

Destruction Efficiency	
VOC percent destruction efficiency (%)	98
H_2S percent destruction efficiency (%)	98

Flare operating hours	8760

Stream Information							
	1	2	3	4	5	6	Total
Stream Sent to Flare/Vapor Combustor (Enter Name of Each Stream Here)	pilot(s)	added fuel stream(s)	Oil Tank Flash Emissions	Water Tank Flash Emissions	Oil Tank W/B Emissions	Water Tank W/B Emissions	-
Maximum Expected Hourly Volumetric Flow Rate of Stream (scf/hr)	12.6	--	1,661.09	428.78	98.32	5.60	2,206.39
Maximum Expected Annual Volumetric Flow Rate of Stream (scf/yr)	110,376.00	--	14,551,108.51	3,756,146.09	861,277.87	49,077.79	19,327,986.27
Heating Content (Btu/ft3)	1,247		1,928.55	1,098.43	1,928.55	1,098.43	1,754.10

Mass Flow Rates of the Vapors Sent to this Control Device, Hourly Basis (lb/hr)							
	1	2	3	4	5	6	Total
Stream Sent to Flare/Vapor Combustor	pilot(s)	added fuel stream(s)	Oil Tank Flash Emissions	Water Tank Flash Emissions	Oil Tank W/B Emissions	Water Tank W/B Emissions	-
H2S	-	-	0.000	0.000	0.000	0.000	0.000
Total VOC	-	-	112.841	3.474	6.869	0.000	123.18
Benzene	-	-	0.127	0.023	0.000	0.000	0.150
Toluene	-	-	0.206	0.035	0.002	0.000	0.243
Ethylbenzene	-	-	0.062	0.010	0.001	0.000	0.073
Xylenes	-	-	0.153	0.026	0.003	0.000	0.182
n-Hexane	-	-	3.272	0.016	0.013	0.000	3.302
HAPs	-	-	3.821	0.110	0.018	0.000	3.949
Total Mass Flow	-	-	178.427	20.675	10.561	0.270	209.933
Mass Flow Rates of the Vapors Sent to this Control Device, Annual Basis (tpy)							
H2S	-	-	0.000	0.000	0.000	0.000	0.000
Total VOC	-	-	494.244	15.216	30.087	0.002	539.548
Benzene	-	-	0.554	0.099	0.002	0.000	0.655
Toluene	-	-	0.903	0.152	0.007	0.000	1.062
Ethylbenzene	-	-	0.272	0.046	0.004	0.000	0.322
Xylenes	-	-	0.672	0.112	0.011	0.000	0.795
n-Hexane	-	-	14.333	0.071	0.057	0.000	14.461
HAP	-	-	16.735	0.481	0.080	0.000	17.296
Total Mass Flow	-	-	781.510	90.558	46.257	1.183	919.508

Table 10

Flare Emissions
Osborne Well Pad
Ritchie County, West Virginia
Antero Resources Corporation

Controlled Emissions							
Hourly (lb/hr)							
	1	2	3	4	5	6	Total
Stream Sent to Flare/Vapor Combustor	pilot(s)	added fuel stream(s)	Oil Tank Flash Emissions	Water Tank Flash Emissions	Oil Tank W/B Emissions	Water Tank W/B Emissions	
NOx	0.001	-	0.166	0.043	0.010	0.001	0.22
CO	0.001	-	0.140	0.036	0.008	0.000	0.19
PM2.5	0.000	-	0.009	0.002	0.001	0.000	0.01
PM10	0.000	-	0.013	0.003	0.001	0.000	0.02
H2S	0.000	-	0.000	0.000	0.000	0.000	0.00
SO_2	0.000	-	0.000	0.000	0.000	0.000	0.00
CO_2	1.512	-	-	-	-	-	1.51
Total VOC	0.000	-	2.257	0.069	0.137	0.000	2.46
Benzene	0.000	-	0.003	0.000	0.000	0.000	0.00
Toluene	0.000	-	0.004	0.001	0.000	0.000	0.00
Ethylbenzene	0.000	-	0.001	0.000	0.000	0.000	0.00
Xylenes	0.000	-	0.003	0.001	0.000	0.000	0.00
n-Hexane	0.000	-	0.065	0.000	0.000	0.000	0.07
HAP	0.000	-	0.076	0.002	0.000	0.000	0.08
N_2O	0.000	-	0.004	0.001	0.000	0.000	0.00
Lead	0.000	-	0.000	0.000	0.000	0.000	0.00
Formaldehyde	0.000	-	-	-	-	-	0.00
Annual (tpy)							
	1	2	3	4	5	6	Total
Stream Sent to Flare/Vapor Combustor	pilot(s)	added fuel stream(s)	Oil Tank Flash Emissions	Water Tank Flash Emissions	Oil Tank W/B Emissions	Water Tank W/B Emissions	
NOx	0.006	-	0.728	0.188	0.043	0.002	0.97
CO	0.005	-	0.611	0.158	0.036	0.002	0.81
PM2.5	0.000	-	0.041	0.011	0.002	0.000	0.06
PM10	0.000	-	0.055	0.014	0.003	0.000	0.07
H_2S	0.000	-	0.000	0.000	0.000	0.000	0.00
SO_2	0.000	-	0.000	0.000	0.000	0.000	0.00
CO_2	6.623	-	-	-	-	-	6.62
Total VOC	0.000	-	9.885	0.304	0.602	0.000	10.79
Benzene	0.000	-	0.011	0.002	0.000	0.000	0.01
Toluene	0.000	-	0.018	0.003	0.000	0.000	0.02
Ethylbenzene	0.000	-	0.005	0.001	0.000	0.000	0.01
Xylenes	0.000	-	0.013	0.002	0.000	0.000	0.02
n-Hexane	0.000	-	0.287	0.001	0.001	0.000	0.29
HAP	0.000	-	0.335	0.010	0.002	0.000	0.35
N_2O	0.000	-	0.016	0.004	0.001	0.000	0.02
Lead	0.000	-	0.000	0.000	0.000	0.000	0.00
Formaldehyde	0.000	-	-	-	-	-	0.00

Flare/Vapor Combustor Total Emissions		
	Hourly Emissions (lb/hr)	Annual Emissions (tpy)
Total VOC	2.46	10.79
NOx	2.21E-01	9.66E-01
CO	1.85E-01	8.12E-01
PM2.5	1.26E-02	5.51E-02
PM10	1.68E-02	7.34E-02
H_2S	4.02E-06	1.76E-05
SO_2	7.56E-06	3.31E-05
Benzene (TAPs)	2.99E-03	1.31E-02
Formaldehyde (TAPs)	9.45E-07	4.14E-06
HAPs	0.08	0.35
CO_2e	694.08	3040.05
N_2O	4.85E-03	2.13E-02
Lead	1.10E-06	4.83E-06

Enter any notes here as needed
1. Emission Factors from AP-42 Tables 1.4-1, 1.4-2, and 1.4.3

Table 12

Haul Road Emissions
Osborne Well Pad
Ritchie County, West Virginia
Antero Resources Corporation

	PM	PM10
Particle Size Multiplier (k)	0.8	0.36
Silt Content of Road Surface Material (s) (%)	5.1	5.1
Days per Year with Precipitation > 0.01 in (p)	150	150
Control Efficiency for Watering [1] (%)	50	50

Tanker Truck Trip Calculation	
Condensate Production (bbl/day)	500
PW Production (bbl/day)	6,000
Truck Capacity (bbl)	200

Pick Up Truck Trip Calculation	
No of Trips Per day	2
Trips Per Year	730

	# of Wheels	Mean Vehicle Weight (W) (tons)	Mean Vehicle Speed (S) (mph)	Miles Per Trip (miles)	Maximum Trips per Hour	Maximum Trips per Year	Vehicle Miles Travelled (miles/hr)	Vehicle Miles Travelled (miles/year)	PM (lbs/VMT)	PM10 (lbs/VMT)
Tanker Trucks Condensate	10	40	10	1.0200	1	913	1.0200	931.2600	3.8175	1.7179
Tanker Trucks PW	10	40	10	1.0200	1	10950	1.0200	11169.0000	3.8175	1.7179
Pick Up Truck	4	3	10	0.2400	1	730	0.2400	175.2000	0.3467	0.1560

	Uncontrolled Emissions						Controlled Emissions					
	PM			PM10			PM			PM10		
	(lbs/hr)	(lbs/year)	(tpy)	(lbs/hr)	(lbs/year)	(tpy)	(lbs/hr)	(lbs/year)	(tpy)	(lbs/hr)	(lbs/year)	(tpy)
Tanker Trucks Condensate	3.8939	3555.1124	1.7776	1.7522	1599.8006	0.7999	1.9469	1777.5562	0.8888	0.8761	799.9003	0.4000
Tanker Trucks PW	3.8939	42637.9858	21.3190	1.7522	19187.0936	9.5935	1.9469	21318.9929	10.6595	0.8761	9593.5468	4.7968
Pick Up Truck	0.0832	60.7383	0.0304	0.0374	27.3322	0.0137	0.0416	30.3691	0.0152	0.0187	13.6661	0.0068
Total Emissions	7.8710	46,253.8365	23.1269	3.5419	20,814.2264	10.4071	3.9355	23,126.9182	11.5635	1.7710	10,407.1132	5.2036

Enter any notes here:	1 EPA, AP-42, Volume I, Section 13.2.2 Unpaved Roads (11/06); assume 2:1 moisture ratio Section 13.2.2 Unpaved Roads (11/06) Source: Attachment L, Fugitive Emissions from Unpaved Haul Roads, Rev 03/2007, West Virginia Department of Environmental Protection

Table 13

Engine Emissions
Osborne Well Pad
Ritchie County, West Virginia
Antero Resources Corporation

Kubota DG972-E2

Power (hp)	24
Fuel consumption (lbs/BHP-hr) [1]	0.449
Heat Content of Fuel (Btu/scf)	1247.06
Density of NG (lb/scf)	0.056
Operating Hours/year	8760

Pollutant	Emission Factors (g/hp-hr)	Emission Factors (lb/MMBtu)	lb/hr	tpy
NOx[1]	5.97		0.3158	1.3831
CO[2]	106.7		5.6445	24.7228
CO_2		110.000	26.3967	115.62
$PM_{2.5}$		9.910E-03	0.0024	0.0104
PM_{10}		9.500E-03	0.0023	0.0100
PM (Total)		9.910E-03	0.0024	0.0104
SO_2		5.880E-04	0.0001	0.0006
TOC		0.358	0.0859	0.3763
Methane		0.230	0.0552	0.2417
VOC[3]		0.0296	0.0071	0.0311
HAPS				
Benzene		1.58E-03	3.79E-04	1.66E-03
Ethylbenzene		2.48E-05	5.95E-06	2.61E-05
Formaldehyde		2.05E-02	4.92E-03	2.15E-02
Naphthalene		9.71E-05	2.33E-05	1.02E-04
Toluene		5.58E-04	1.34E-04	5.86E-04
Xylene		1.95E-04	4.68E-05	2.05E-04

	lb/hr	tpy
TOTAL Uncontrolled VOC	0.007	0.031
TOTAL Uncontrolled NOx	0.316	1.383
TOTAL Uncontrolled HAPs	0.006	0.024
TOTAL Uncontrolled TAPs (Benzene)	0.000	0.002
TOTAL Uncontrolled TAPs (Formaldehyde)	0.005	0.022
TOTAL CO_{2e} Emissions	27.78	121.7

Enter Any Notes Here:

1. Emission factor used for the 24 HP engine's Nox is the 40 CFR 1054 standard indicated on the EPA's Certificate of Conformity. See Appendix P.

2. Emission factor for CO was the Certification CO level taken from EPA's Non-Road Small SI 2013 Certification issued by Office of Transportation and Air Quality, March 2014.

3. Emission factors for all other contaminants including VOCs were obtained from AP-42, Section 3.2 "Natural Gas-fired Reciprocating Engines", Table 3.2-3.

Stream HP Separator Gas C3+ Mass Flow =1.675E+05 ton/yr

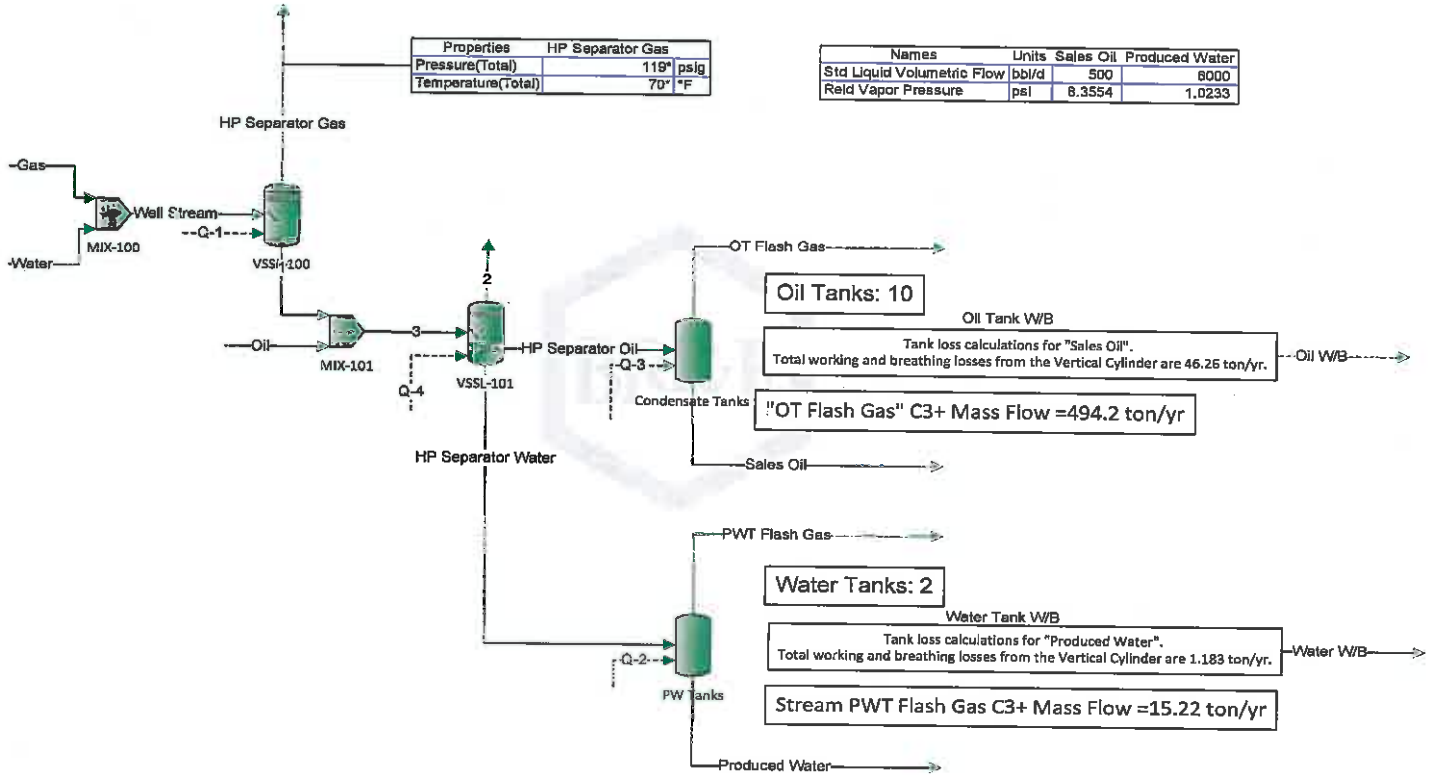

Names	Units	Sales Oil	Produced Water
Std Liquid Volumetric Flow	bbl/d	500	6000
Reid Vapor Pressure	psi	8.3554	1.0233

Oil Tanks: 10

Oil Tank W/B

Tank loss calculations for "Sales Oil".
Total working and breathing losses from the Vertical Cylinder are 46.26 ton/yr.

Oil W/B

"OT Flash Gas" C3+ Mass Flow =494.2 ton/yr

Water Tanks: 2

Water Tank W/B

Tank loss calculations for "Produced Water".
Total working and breathing losses from the Vertical Cylinder are 1.183 ton/yr.

Water W/B

Stream PWT Flash Gas C3+ Mass Flow =15.22 ton/yr

		Well Stream	HP Separator Gas	HP Separator Water	HP Separator Oil	OT Flash Gas	Sales Oil	Gas	Water	Oil	Produced Water	PWT Flash Gas	Oil W/B	Water W/B	1	2	3
m-Xylene		0	0	0.000189447	0.810404	0.0448481	0.835180	0	0	0.812738	0.000174317	0.0625665	0.0132671	2.52003E-05	0	0.00878899	0.0496413
o-Xylene		0	0	0.000233743	0.830989	0.0411047	0.856532	0	0	0.833970	0.000219655	0.0583167	0.0105388	2.45532E-05	0	0.00804871	0.0506381
Nonane		0	0	2.15197E-06	7.28877	0.184264	7.32902	0	0	7.29316	7.09351E-08	0.00858196	0.137918	1.16175E-08	0	0.0371774	0.445465
C10+		0	0	2.67827E-08	54.9322	0.00378644	56.7099	0	0	54.8927	5.62468E-10	0.000108170	0.00200379	1.60864E-13	0	0.000841798	3.35279
Mass Flow		lb/h	lb/h	lb/h	lb/h	lb/h	lb/h	lb/h	lb/h	lb/h	lb/h	lb/h	lb/h	lb/h	lb/h	lb/h	lb/h
Water		88024.6	492.631	87531.5	0.477902	0.400956	0.0769131	0	88024.6	0	87530.9	0.558628	1.48365E-05	0.251830	87532.0	0.0810637	87532.0
H2S		0	0	0	0	0	0	0	0	0	0	0	0	0	0	0	0
Nitrogen		1341.35	1341.28	0.0289520	0.0156788	0.0351252	0.000453921	1341.35	0	0	0.00156380	0.0213681	0.000112005	7.31466E-06	0.0746804	0.00884369	0.0746804
Carbon Dioxide		625.028	623.618	1.20738	0.434033	0.374118	0.0599153	625.028	0	0.240621	0.847090	0.334885	0.0301011	0.00633771	1.41017	0.00878731	1.73090
Methane		120663	120650	13.4443	23.9211	23.0358	0.885284	120663	0	25.0262	1.38350	12.0308	0.345802	0.00864024	13.4436	1.96735	39.3528
Ethane		41332.4	41327.3	5.38172	51.7009	41.7396	8.96136	41332.4	0	52.6223	0.634507	4.74721	3.31594	0.00313789	5.16812	0.707793	57.7805
Propane		19133.7	19181.0	2.61067	84.8608	44.6202	40.3406	19183.7	0	86.1457	0.338913	2.28113	2.99463	0.000367580	2.64592	0.312168	87.7916
Isobutane		3188.17	3188.02	0.137403	34.7290	10.2763	24.4826	3103.17	0	34.7707	0.00671653	0.130719	0.654837	2.63703E-06	0.145348	0.0496734	34.9160
n-Butane		6881.06	6860.40	0.582857	97.8265	22.1222	75.7043	6661.08	0	97.8504	0.0592432	0.523714	1.38813	1.58860E-05	0.656327	0.0972568	98.5067
Isopentane		2618.59	2618.42	0.135194	86.1383	1.66808	78.1202	2618.59	0	86.7839	0.00072626	0.125468	0.623369	9.54321E-07	0.173218	0.0335948	86.9571
n-Pentane		2035.36	2035.23	0.160593	160.093	12.2517	147.841	2035.36	0	160.189	0.0126700	0.167883	0.728687	9.30148E-07	0.130802	0.0461806	160.319
2-Methylpentane		0	0	0.0188581	79.0112	2.56526	78.4259	0	0	79.0375	0.000584311	0.0162538	0.151273	1.72225E-08	0	0.00938636	79.0375
3-Methylpentane		0	0	0.0270930	51.4027	1.51216	49.8805	0	0	51.4352	0.00244380	0.0248402	0.0882437	6.32843E-08	0	0.00547548	51.4362
n-Hexane		4547.60	4547.49	0.0157751	137.932	3.27240	134.809	4547.60	0	137.054	0.000473656	0.0183014	0.0129817	6.68533E-10	0.108037	0.0118242	137.960
Methylcyclopentane		0	0	0.0409418	31.5911	0.720279	30.8709	0	0	31.6347	0.00839104	0.0315507	0.0391140	1.74201E-07	0	0.00257485	31.3347
Benzene		0	0	0.357073	5.62153	0.125341	5.49499	0	0	5.97806	0.334534	0.0225380	0.000429105	3.82462E-07	0	0.000451039	5.97905
2-Methylhexane		0	0	0.00542856	94.5413	0.853348	93.5680	0	0	94.5502	0.000132731	0.00526583	0.00358738	9.13237E-11	0	0.00345091	94.5502
3-Methylhexane		0	0	0.00453636	79.5228	0.733775	78.7586	0	0	79.5299	0.000141914	0.00438345	0.0432913	1.14198E-09	0	0.00278413	79.5299
Heptane		0	0	0.0105203	221.956	1.69065	220.264	0	0	221.972	0.000330986	0.0101883	0.0884013	1.94154E-09	0	0.00616420	221.972
Methylcyclohexane		0	0	0.0426204	155.589	1.20195	154.387	0	0	155.636	0.00701266	0.0356077	0.0631373	1.19843E-08	0	0.00432061	175.836
Toluene		0	0	0.461595	33.2[illegible]	0.208236	33.0637	0	0	33.7523	0.427903	0.0347921	0.00150371	2.83890E-07	0	0.000737107	33.7523
Octane		0	0	0.00518850	594.818	1.41884	593.499	0	0	594.929	0.000108885	0.00508082	0.0703381	1.68912E-10	0	0.00524830	594.929
Ethylbenzene		0	0	0.126387	30.0087	0.0821816	29.9465	0	0	30.1358	0.115938	0.0104491	0.000846333	4.79870E-08	0	0.000226151	30.1353
m-Xylene		0	0	0.165873	46.1251	0.0800210	46.0451	0	0	43.2913	0.152569	0.0132840	0.00140326	6.60769E-08	0	0.000281311	46.2913
o-Xylene		0	0	0.204658	47.2857	0.0733416	47.2223	0	0	47.5006	0.192278	0.0123817	0.00111289	6.53421E-08	0	0.000266744	47.5006
Nonane		0	0	0.00188420	415.419	0.328777	415.090	0	0	415.422	6.20934E-05	0.00182210	0.0145356	3.18870E-11	0	0.00123210	415.477
C10+		0	0	2.34588E-05	3126.54	0.00672034	3126.53	0	0	3126.54	4.92359E-07	2.29685E-05	0.000211939	4.88582E-16	0	2.78082E-05	3126.54

Process Streams		Well Stream	HP Separator Gas	HP Separator Water	HP Separator Oil	OT Flash Gas	Sales Oil	Gas	Water	Oil	Produced Water	PWT Flash Gas	Oil W/B	Water W/B	1	2	3
Phase: Total	Status	Solved	Solved	Solved	Solved	Solved	Solved	Solved	Solved	Solved	Solved	Solved	Solved	Solved	Solved	Solved	Solved
Property	Units																
Temperature	°F	185.7	70.0	70.0	70.0	75.9	75.9	200.0	300.0	200.0	75.9	75.84	75.9425	75.9425	70	70	74.1115
Pressure	psig	200	119	119	119	0	0	300	200	300	0	0	5.07043	-14.2273	119	119	119
Mole Fraction Vapor	%	70.0214	100	0	0	100	0	100	0	0	0	100	100	100	0	100	0.00531540
Mole Fraction Light Liquid	%	29.9786	0	100	100	0	100	0	100	100	100	0	0	0	100	0	0.924778
Mole Fraction Heavy Liquid	%	0	0	0	0	0	0	0	0	0	0	0	0	0	0	0	99.0702
Molecular Weight	lb/lbmol	19.9	20.9	18.0	125.3	36.6	136.0	20.9	18.0	125.0	18.0	20.8234	40.7624	18.2880	18.0160	20.7546	19.0098
Mass Density	lb/ft^3	0.7	0.5	62.3	46.7	0.1	47.0	1.0	57.3	42.8	62.2	0.0534379	0.142954	0.00149270	62.2658	0.506734	60.5489
Molar Flow	lbmol/h	14568.0	9706.1	4859.9	45.4	4.9	40.5	9679.9	4886.1	45.5	4858.9	1.01961	0.259088	0.0147635	4859.89	0.159631	4905.45
Mass Flow	lb/h	290220.9	202865.0	87556.7	5691.8	178.4	5513.2	202196.3	88024.6	5695.7	87536.5	21.2318	10.5811	0.270143	87555.9	3.31412	93251.6
Vapor Volumetric Flow	MCFH	326.7	398.3	1.4	0.1	1.9	0.1	209.9	1.5	0.1	1.4	0.397317	0.0738927	0.180976	1.40617	0.00855308	1.54011
Liquid Volumetric Flow	Mbbl/d	1396.4	1702.4	6.0	0.5	8.1	0.5	897.1	8.6	0.6	6.0	1.69836	0.315860	0.773595	6.01073	0.0280117	6.58331
Std Vapor Volumetric Flow	MMSCFD	132.7	88.4	44.3	0.4	0.0	0.4	88.2	44.5	0.4	44.3	0.00928625	0.00235968	0.000134461	44.2620	0.00145412	44.6770
Std Liquid Volumetric Flow	Mbbl/d	43.5	40.5	6.0	0.5	0.0	0.5	40.4	6.0	0.5	6.0	0.00416071	0.00156049	2.04096E-05	6.00409	0.000866174	6.53183
Compressibility		0.685	0.985	0.007	0.063	0.989	0.007	0.904	0.008	0.130	0.001	0.996252	0.980770	0.900551	0.00680550	0.965251	0.00702446
Specific Gravity			0.721	0.998	0.748	1.264	0.754	0.721	0.920	0.603	0.998	0.718975	1.40741	0.631780	0.998342	0.716599	
API Gravity				10.0	56.4		54.4		10.0	58.2	10.0				10.0357		
Enthalpy	MMBtu/h	-900.3	-314.8	-597.7	-4.7	-0.2	-4.5	-319.4	-580.8	-4.3	-597.2	-0.0377491	-0.0113600	-0.00149811	-597.727	-0.00550508	-602.066
Mass Enthalpy	Btu/lb	-3102.1	-1672.1	-6826.7	-628.9	-1157.7	-811.6	-1579.9	-6580.5	-761.8	-6822.4	-1777.95	-1077.54	-5515.62	-6826.80	-1661.10	-8456.36
Mass Cp	Btu/(lb*°F)	0.7	0.5	1.0	0.5	0.4	0.[illegible]	0.6	1.0	0.6	1.0	0.476223	0.410822	0.445347	0.983096	0.495291	0.952102
Ideal Gas CpCv Ratio		1.243	1.249	1.326	1.045	1.149	1.041	1.215	1.318	1.037	1.326	1.25154	1.13588	1.32238	1.32582	1.25025	1.30746
Dynamic Viscosity	cP		0.0	1.0	0.7	0.0	0.8	0.0	0.2	0.3	0.9	0.0102571	0.00861951	0.0102138	0.995642	0.0106131	
Kinematic Viscosity	cSt		1.3	1.0	1.0	5.9	1.1	0.5	0.2	0.5	0.9	12.4500	3.76492	427.181	0.998138	1.31009	
Thermal Conductivity	Btu/(h*ft*°F)		0.0	0.3	0.1	0.0	0.1	0.0	0.4	0.1	0.3	0.0110302	0.0111591	0.0122448	0.346728	0.0174586	
Surface Tension	lbf/ft			0.005	0.002		0.002		0.003	0.001	0.005				0.00504077		
Net I.G. Heating Value	Btu/ft^3	768.9	1138.7	0.3	6282.8	1928.5	6784.0	1141.9	0.0	6240.1	0.0	1068.43	2140.96	46.0019	0.255318	1107.29	58.2359
Net Liquid Heating Value	Btu/lb	14089.2	20631.5	-1053.8	18798.5	19850.8	18762.4	20084.2	-1059.8	18799.9	-1058.9	19628.6	19778.7	-36.8211	-1054.11	20730.6	158.553
Gross I.G. Heating Value	Btu/ft^3	853.4	1255.4	50.6	6713.0	2101.8	7267.4	1258.8	50.3	6697.3	50.4	1212.42	2329.34	98.4546	50.5799	1254.02	112.315
Gross Liquid Heating Value	Btu/lb	15690.7	22738.4	6.2	20158.7	21648.1	20110.5	22508.7	0.0	20162.5	0.9	22006.0	21532.3	1051.0	5.9	22864.7	1237.1

Process Streams		Well Stream	HP Separator Gas	HP Separator Water	HP Separator Oil	OT Flash Gas	Sales Oil	Gas	Water	Oil	Produced Water	PWT Flash Gas	Oil W/B	Water W/B	1	2	3
Phase: Vapor	Status	Solved	Solved	Solved	Solved	Solved	Solved	Solved	Solved	Solved	Solved	Solved	Solved	Solved	Solved	Solved	Solved
Mole Fraction		%	%	%	%	%	%	%	%	%	%	%	%	%	%	%	%
Water		5.10165	0.281730	0.281759	0.281759	0.456607	0.456607	0			3.02978	3.02978	0.000317864	94.6080	0.281730	0.281759	0.326027
H2S		0	0	0	0	0	0	0			0	0	0	0	0	0	0
Nitrogen		0.439442	0.493294	0.197842	0.197842	0.0259438	0.0259438	0.494653			0.0993183	0.0993183	0.00154351	0.00176864	0.493294	0.197842	0.196545
Carbon Dioxide		0.139079	0.145991	0.125042	0.125042	0.174401	0.174401	0.146717			0.813158	0.813158	0.263990	0.975431	0.145991	0.125042	0.130401
Methane		73.1375	77.4832	77.5800	77.5800	29.4591	29.4591	77.7018			73.7345	73.7345	8.31571	3.64309	77.4832	77.5800	78.6425
Ethane		13.4760	14.1602	14.7412	14.7412	28.4784	28.4784	14.2004			15.4840	15.4840	42.5637	0.706851	14.1602	14.7412	15.1854
Propane		4.28521	4.48157	4.43341	4.43341	20.7132	20.7132	4.49433			5.07503	5.07503	26.2119	0.0564603	4.48157	4.43341	4.87269
Isobutane		0.537795	0.565110	0.534137	0.534137	3.62729	3.62729	0.566636			0.220629	0.220629	4.34554	0.000307314	0.565110	0.534137	0.570103
n-Butane		1.12358	1.18062	1.04794	1.04794	7.60959	7.60959	1.18394			0.863724	0.863724	9.20482	0.00185250	1.18062	1.04794	1.12422
Isopentane		0.355839	0.373906	0.291601	0.291601	2.46473	2.46473	0.374944			0.170556	0.170556	2.79923	8.95933E-05	0.373906	0.291601	0.318565
n-Pentane		0.270381	0.290628	0.400845	0.400845	3.48380	3.48380	0.291434			0.227342	0.227342	3.90344	8.73240E-05	0.290628	0.400845	0.437184
2-Methylpentane		0	0	0.0882845	0.0882845	0.615478	0.615478	0			0.0185099	0.0185099	0.677621	1.35370E-06	0	0.0882845	0.0753009

3-Methylpentane		0	0	0.0397910	0.0397910	0.359999	0.359999	0			0.0260534	0.0260534	0.395233	4.97420E-06	0	0.0397910	0.0439968
n-Hexane		0.511793	0.543675	0.0859279	0.0859279	0.776058	0.776058	0.547164			0.0165527	0.0165527	0.0681435	8.13479E-08	0.543675	0.0859279	0.0923348
Methylcyclopentane		0	0	0.0191600	0.0191600	0.175564	0.175564	0			0.0367681	0.0367681	0.179383	1.42203E-06	0	0.0191600	0.0212073
Benzene		0	0	0.00351612	0.00351612	0.0332354	0.0332354	0			0.0282997	0.0282997	0.00212031	3.31652E-06	0	0.00351612	0.00359748
3-Methylhexane		0	0	0.0215677	0.0215677	0.195191	0.195191	0			0.00515413	0.00515413	0.0138190	6.17331E-09	0	0.0215677	0.0212985
3-Methylpentane		0	0	0.0172754	0.0172754	0.156375	0.157378	0			0.00430025	0.00430025	0.188754	7.71956E-09	0	0.0172754	0.0194023
Heptane		0	0	0.0385253	0.0385253	0.346150	0.346150	0			0.00997320	0.00997320	0.340613	1.31450E-07	0	0.0385253	0.0433258
Methylcyclohexane		0	0	0.0275569	0.0275569	0.251145	0.251145	0			0.0356680	0.0356680	0.246182	2.86627E-06	0	0.0275569	0.0309201
Toluene		0	0	0.00500997	0.00500997	0.0459206	0.0459206	0			0.0370344	0.0370344	0.00628905	2.06772E-05	0	0.00500997	0.00563025
Octane		0	0	0.0287733	0.0287733	0.254827	0.254827	0			0.00462221	0.00462221	0.237667	1.12020E-08	0	0.0287733	0.0328551
Ethylbenzene		0	0	0.00133402	0.00133402	0.0120162	0.0120162	0			0.00965302	0.00965302	0.00307388	3.08035E-06	0	0.00131402	0.00152093
m,p-Xylene		0	0	0.00171839	0.00171839	0.0154638	0.0154638	0			0.0122719	0.0122719	0.00510164	4.21339E-07	0	0.00171839	0.00198540
o-Xylene		0	0	0.00157347	0.00157347	0.0141728	0.0141728	0			0.0114383	0.0114383	0.00404634	4.23270E-06	0	0.00157347	0.00180974
Nonane		0	0	0.00601613	0.00601613	0.0526912	0.0526912	0			0.00139736	0.00139936	0.0436395	1.65456E-09	0	0.00601613	0.00695913
C10+		0	0	8.64480E-05	8.64480E-05	0.000882200	0.000882200	0			1.11453E-05	1.11453E-05	0.000404768	0	0	8.64480E-05	0.000108108
Molar Flow		lbmol/h	lbmol/h	lbmol/h	lbmol/h	lbmol/h	lbmol/h	lbmol/h	lbmol/h	lbmol/h	lbmol/h	lbmol/h	lbmol/h	lbmol/h	lbmol/h	lbmol/h	lbmol/h
Water		520.334	27.3452	0	0	0.0222564	0	0			0	0.0308920	8.23550E-07	0.0139876	0	0.00449817	0.00850095
H2S		0	0	0	0	0	0	0			0	0	0	0	0	0	0
Nitrogen		47.8200	47.8799	0	0	0.00126455	0	47.9825			0	0.00101266	3.99826E-06	2.61113E-07	0	0.000315916	0.000486405
Carbon Dioxide		14.1851	14.1701	0	0	0.00630084	0	14.2021			0	0.00828108	0.000683867	0.000144009	0	0.00019987	0.000340012
Methane		7520.73	7520.84	0	0	1.43593	0	7521.48			0	0.751806	0.0215554	0.000538686	0	0.123881	0.199841
Ethane		1374.48	1374.41	0	0	1.38612	0	1374.55			0	0.157877	0.110277	0.000104356	0	0.0235369	0.0393949
Propane		435.023	434.967	0	0	1.00963	0	435.047			0	0.0517456	0.0679121	8.37552E-06	0	0.00709734	0.0121838
Isobutane		54.8515	54.8504	0	0	0.176806	0	54.8551			0	0.00224956	0.0112688	4.53104E-08	0	0.000552218	0.00146851
n-Butane		114.597	114.583	0	0	0.360815	0	114.604			0	0.00901058	0.0221166	2.73435E-07	0	0.00167337	0.00299134
Isopentane		38.2832	38.2919	0	0	0.120142	0	38.2953			0	0.00173901	0.00725430	1.32271E-08	0	0.000465832	0.000825424
n-Pentane		28.2095	28.2058	0	0	0.106612	0	28.2106			0	0.0022413	0.0101134	1.28011E-08	0	0.000640075	0.00113693
2-Methylpentane		0	0	0	0	0.0300003	0	0			0	0.000188729	0.00176533	1.99854E-10	0	0.00010903B	0.000196063
3-Methylpentane		0	0	0	0	0.0175475	0	0			0	0.000286038	0.00102400	7.34057E-10	0	6.3536E-05	0.000114562
n-Hexane		52.7706	52.7702	0	0	0.0376737	0	52.7715			0	0.000169165	0.000150643	7.75782E-12	0	0.000137211	0.000248318
Methylcyclopentane		0	0	0	0	0.00855850	0	0			0	0.000374892	0.000184001	2.06986E-09	0	3.05946E-05	5.52986E-05
Benzene		0	0	0	0	0.00182000	0	0			0	0.000256548	5.49947E-06	4.89636E-09	0	5.77127E-06	1.04232E-05
2-Methylhexane		0	0	0	0	0.00951424	0	0			0	5.2552HE-05	3.58039E-05	9.11397E-13	0	3.44396E-06	6.32004E-06
3-Methylhexane		0	0	0	0	0.00762236	0	0			0	4.32159E-05	0.00043240	1.13988E-11	0	2.75866E-05	5.06902E-05
Heptane		0	0	0	0	0.0168726	0	0			0	0.000101688	0.00066231	1.84066E-11	0	6.15178E-05	0.000112974
Methylcyclohexane		0	0	0	0	0.0122418	0	0			0	0.000[illegible]055	0.00043038	4.27589E-10	0	4.40039E-05	8.06222E-05
Toluene		0	0	0	0	0.00223832	0	0			0	0.000377607	1.62301E-05	3.08221E-09	0	7.89999E-06	1.46805E-05
Octane		0	0	0	0	0.0124211	0	0			0	4.44777E-05	0.000815767	1.60381E-12	0	4.59456E-05	8.56677E-05
Ethylbenzene		0	0	0	0	0.00[illegible]585707	0	0			0	9.84234E-05	7.97166E-06	4.51615E-10	0	2.13019E-05	3.96573E-05
m,p-Xylene		0	0	0	0	0.00073742	0	0			0	0.000125126	1.32178E-05	6.41236E-10	0	2.74394E-06	5.12467E-06
o-Xylene		0	0	0	0	0.000690529	0	0			0	0.000116627	1.04836E-05	5.24866E-10	0	2.61254E-06	4.86531E-06
Nonane		0	0	0	0	0.0025634B	0	0			0	1.42059E-05	0.000113687	2.46700E-13	0	9.60665E-08	1.61716E-05
C10+		0	0	0	0	3.32526E-05	0	0			0	1.13638E-07	1.04868E-06	0	0	1.38041E-07	2.82017E-07
Mass Fraction		%	%	%	%	%	%	%	%	%	%	%	%	%	%	%	%
Water		4.43105	0.243077	0.244571	0.244571	0.224717	0.224717	0			2.62129	2.62129	0.000140495	93.1472	0.243077	0.244571	0.279953
H2S		0	0	0	0	0	0	0			0	0	0	0	0	0	0
Nitrogen		0.634019	0.661820	0.267036	0.267036	0.0198542	0.0198542	0.667391			0.133612	0.133612	0.00106055	0.00270770	0.661820	0.267036	0.248850
Carbon Dioxide		0.265096	0.307709	0.265148	0.265148	0.209676	0.209676	0.309119			1.71858	1.71858	0.285019	2.34606	0.307709	0.265148	0.273284
Methane		57.0314	59.5315	59.9663	59.9663	12.9105	12.9105	59.6772			58.6055	58.6055	3.27431	3.19840	59.5315	59.9663	56.5502
Ethane		19.5360	20.3819	21.3569	21.3569	23.3931	23.3931	20.4417			22.3590	22.3590	31.3978	1.16105	20.3819	21.3569	21.7437
Propane		9.06757	9.46441	9.41933	9.41933	24.9515	24.9515	9.48108			10.7469	10.7469	28.3654	0.136061	9.46441	9.41933	9.81183
Isobutane		1.50700	1.57305	1.49583	1.49583	5.75941	5.75941	1.57677			0.615619	0.615619	6.20049	0.000978191	1.57305	1.49583	1.57791
n-Butane		3.14647	3.20841	2.93471	2.93471	12.3365	12.3365	3.29435			2.46355	2.46355	13.1249	0.00588431	3.20841	2.93471	3.11159
Isopentane		1.23776	1.29199	1.01369	1.01369	4.85806	4.85806	1.29507			0.590942	0.590942	4.95584	0.000353285	1.29199	1.01369	1.06763
n-Pentane		0.962071	1.00423	1.39345	1.39345	6.93351	6.86651	1.00883			0.762773	0.762774	5.90903	0.000344317	1.00423	1.39345	1.50204
2-Methylpentane		0	0	0.210525	0.288525	1.44893	1.44893	0			0.0796013	0.0796013	1.79234	6.31933E-06	0	0.255325	0.309012
3-Methylpentane		0	0	0.165217	0.165217	0.847465	0.847465	0			0.118096	0.118096	0.335557	2.34263E-05	0	0.165217	0.180301
n-Hexane		2.14960	2.24365	0.356783	0.356783	1.83403	1.83403	2.24910			0.0797784	0.0797784	0.122921	2.47474E-07	2.24365	0.356783	0.380810
Methylcyclopentane		0	0	0.0776935	0.0776935	0.409833	0.403033	0			0.146801	0.146801	0.170361	6.44617E-05	0	0.0776935	0.0849918
Benzene		0	0	0.0136096	0.0136096	0.0709204	0.0709204	0			0.106157	0.106157	0.00406309	0.000141578	0	0.0136096	0.0148883
2-Methylhexane		0	0	0.104128	0.104128	0.534706	0.534706	0			0.0246016	0.0246016	0.0338689	3.38067E-09	0	0.104128	0.115836
3-Methylhexane		0	0	0.0834048	0.0834048	0.428061	0.428061	0			0.0205928	0.0205928	0.409914	4.22722E-07	0	0.0834048	0.0925798
Heptane		0	0	0.185538	0.185538	0.947532	0.947532	0			0.0479910	0.0479910	0.837049	7.19636E-07	0	0.185538	0.206742
Methylcyclohexane		0	0	0.130367	0.130367	0.673839	0.673839	0			0.167710	0.167710	0.597811	1.54516E-05	0	0.130367	0.144570

Ethane		0	0	0.0222414	0.0222414	0.115586	0.115586	0			0.163868	0.163688	0.0142382	0.000105126	0	0.0222414	0.0247034
Propane		0	0	0.156362	0.156362	0.795193	0.795193	0			0.0239293	0.0239193	0.656014	6.99304E-06	0	0.156362	0.176717
Ethylbenzene		0	0	0.00882386	0.00882386	0.0343499	0.0348499	0			0.0492145	0.0492145	0.00801371	1.77582E-05	0	0.00882388	0.00988915
Isobutane		0	0	0.00678939	0.00678939	0.0448481	0.0448481	0			0.0625665	0.0625665	0.0131571	2.52003E-05	0	0.00671999	0.00893622
n-Butane		0	0	0.00804871	0.00804871	0.0411047	0.0411047	0			0.0583167	0.0583167	0.0105396	2.45582E-05	0	0.00804871	0.00910374
Nonane		0	0	0.0371774	0.0371774	0.164264	0.164264	0			0.00858196	0.00858196	0.137918	1.18075E-08	0	0.0371774	0.0425639
C10+		0	0	0.000841796	0.000841796	0.00376644	0.00376644	0			0.000108170	0.000108170	0.00200879	0	0	0.000841796	0.00104091
Mass Flow		lb/h	lb/h	lb/h	lb/h	lb/h	lb/h	lb/h	lb/h	lb/h	lb/h	lb/h	lb/h	lb/h	lb/h	lb/h	lb/h
Water		9373.98	462.631	0	0	0.400956	0	0			0	0.555528	1.48385E-05	0.251630	0	0.00610537	0.0163147
H2S		0	0	0	0	0	0	0			0	0	0	0	0	0	0
Nitrogen		1341.26	1341.26	0	0	0.0354272	0	1341.35			0	0.0283681	0.000112005	7.21468E-06	0	0.00584988	0.0136269
Carbon Dioxide		624.279	622.616	0	0	0.374118	0	625.028			0	0.364885	0.0011011	0.00837771	0	0.00879731	0.0149838
Isobutane		120661	120660	0	0	23.0350	0	120683			0	12.0608	0.345802	0.00864024	0	1.99735	3.20694
Ethane		41328.7	41327.3	0	0	41.7386	0	41332.4			0	4.74721	3.31594	0.00313789	0	0.707793	1.19058
Propane		19182.6	19181.0	0	0	44.5202	0	19185.7			0	2.28173	2.99463	0.000357560	0	0.312168	0.537250
Isobutane		3188.09	3188.02	0	0	10.2733	0	3188.17			0	0.130749	0.954837	2.63700E-06	0	0.0495721	0.0879992
n-Butane		6660.65	6660.40	0	0	22.1222	0	6661.06			0	0.523714	1.38613	1.58950E-05	0	0.0972598	0.170373
Isopentane		2618.51	2618.42	0	0	8.66806	0	2618.59			0	0.125468	0.523389	8.54321E-07	0	0.0338948	0.059553
n-Pentane		2035.28	2035.23	0	0	12.2517	0	2035.36			0	0.167683	0.729667	9.30148E-07	0	0.0461806	0.0822443
2-Methylpentane		0	0	0	0	2.68529	0	0			0	0.0182838	0.151270	1.72225E-08	0	0.00939630	0.0165217
3-Methylpentane		0	0	0	0	1.51216	0	0			0	0.0246122	0.0882457	6.32845E-08	0	0.00547340	0.00967246
n-Hexane		4547.53	4547.49	0	0	3.27240	0	4547.60			0	0.0163014	0.0129817	6.65533E-10	0	0.0118242	0.0213989
Methylcyclopentane		0	0	0	0	0.720279	0	0			0	0.0315507	0.0391140	1.74201E-07	0	0.00774765	0.00135375
Benzene		0	0	0	0	0.126541	0	0			0	0.0226390	0.00346105	3.82483E-07	0	0.000461039	0.000814175
3-Methylhexane		0	0	0	0	0.953343	0	0			0	0.00526583	0.00358756	9.10237E-11	0	0.00345091	0.00633281
2-Methylhexane		0	0	0	0	0.733775	0	0			0	0.00433345	0.0432813	1.14196E-09	0	0.00276413	0.00506524
Heptane		0	0	0	0	1.69085	0	0			0	0.0101863	0.0884013	1.94458E-08	0	0.00616420	0.0113202
Methylcyclohexane		0	0	0	0	1.20195	0	0			0	0.0350077	0.0631373	4.15843E-08	0	0.00432051	0.00791559
Toluene		0	0	0	0	0.206236	0	0			0	0.0347921	0.00150371	2.83990E-07	0	0.000737107	0.00135264
Octane		0	0	0	0	1.41[illegible]	0	0			0	0.00508062	0.0703381	1.58912E-10	0	0.00524830	0.00962669
Ethylbenzene		0	0	0	0	0.0621816	0	0			0	0.0104491	0.000846333	4.75670E-08	0	0.000226151	0.000421022
m-Xylene		0	0	0	0	0.0800210	0	0			0	0.0132840	0.00140326	6.60769E-08	0	0.000291311	0.000544061
o-Xylene		0	0	0	0	0.0733416	0	0			0	0.0123817	0.00111299	6.53421E-08	0	0.000266744	0.000489478
Nonane		0	0	0	0	0.328777	0	0			0	0.00182210	0.0143656	3.18970E-11	0	0.00123210	0.00233060
C10+		0	0	0	0	0.00672034	0	0			0	2.29665E-05	0.000211936	0	0	2.78982E-05	5.89535E-05
Process Streams		**Well Stream**	**HP Separator Gas**	**HP Separator Water**	**HP Separator Oil**	**OT Flash Gas**	**Sales Oil**	**Gas**	**Water**	**Oil**	**Produced Water**	**PWT Flash Gas**	**Oil WB**	**Water WB**	**1**	**2**	**3**
Phase: Vapor	**Status**	Survic	Solved	Solved	Solved	Solved	Solved	Solved	Solved	Solved	Solved	Solved	Solved	Solved	Solved	Solved	Solved
Property	**Units**																
Temperature	°F	195.7	70.0	70.0	70.0	75.9	75.9	200.0			75.9	75.94	75.9425	75.9425	70	70	74.3415
Pressure	psia	200	119	119	119	0	0	300			0	0	5.07049	-14.2273	119	119	119
Mole Fraction Vapor	%	100	100	100	100	100	100	100			100	100	100	100	100	100	100
Mole Fraction Light Liquid	%	0	0	0	0	0	0	0			0	0	0	0	0	0	0
Mole Fraction Heavy Liquid	%	0	0	0	0	0	0	0			0	0	0	0	0	0	0
Molecular Weight	lb/lbmol	20.7	20.9	20.6	20.6	36.6	36.6	20.9			20.1	20.8234	40.7624	18.2980	20.8801	20.7346	20.8997
Mass Density	lb/ft^3	0.7	0.5	0.5	0.5	0.1	0.1	1.0			0.1	0.0634779	0.142924	0.00149270	0.508882	0.505751	0.507503
Molar Flow	lbmol/h	10199.3	9706.1	0.0	0.0	4.9	0.0	9679.9			0.0	1.01981	0.259066	0.0147935	0	0.158861	0.260744
Mass Flow	lb/h	211551.9	202665.0	0.0	0.0	178.4	0.0	202188.3			0.0	21.2318	10.5611	0.270143	0	3.31412	5.47553
Vapor Volumetric Flow	ACFH	325.4	398.3	0.0	0.0	1.9	0.0	209.9			0.0	0.397317	0.0738927	0.180978	0	0.0655306	0.0107892
Liquid Volumetric Flow	Mbbl/d	1390.9	1702.4	0.0	0.0	8.1	0.0	897.1			0.0	1.69836	0.315869	0.773595	0	0.0280117	0.0461192
Std Vapor Volumetric Flow	MMSCFD	92.0	88.4	0.0	0.0	0.0	0.0	88.2			0.0	0.00928625	0.00227968	0.000134451	0	0.00145432	0.00237476
Std Liquid Volumetric Flow	Mbbl/d	41.1	40.5	0.0	0.0	0.0	0.0	40.4			0.0	0.00418071	0.00156049	2.04066E-05	0	0.000666174	0.00109367
Compressibility		0.974	0.995	0.995	0.995	0.989	0.989	0.984			0.996	0.996792	0.990770	0.999551	0.995080	0.995261	0.995334
Specific Gravity		0.716	0.721	0.717	0.717	1.264	1.264	0.721			0.719	0.718575	1.40741	0.631760	0.720922	0.716299	0.720061
API Gravity																	
Enthalpy	MMBtu/h	-37.0	-334.8	0.0	0.0	-0.2	0.0	-319.4			0.0	-0.0377391	-0.0113600	-0.00149811	0	-0.00550608	-0.00901852
Mass Enthalpy	Btu/lb	-1753.0	-1652.1	-1661.1	-1661.1	-1157.7	-1157.7	-1573.9			-1778.0	-1777.85	-1077.54	-5545.82	-1662.07	-1661.10	-1647.06
Ideal Gas Cp	Btu/(lb °F)	0.5	0.6	0.5	0.5	0.4	0.4	0.5			0.5	0.478223	0.410822	0.4[illegible]47	0.464108	0.495291	0.495069
Ideal Gas Cp/Cv Ratio		1.220	1.249	1.250	1.250	1.149	1.149	1.215			1.252	1.25164	1.13598	1.32236	1.24014	1.25025	1.24663
Dynamic Viscosity	cP	0.0	0.0	0.0	0.0	0.0	0.0	0.0			0.0	0.0106571	0.00881951	0.0102138	0.0106260	0.0106131	0.0106507
Kinematic Viscosity	cSt	1.2	1.3	1.3	1.3	5.9	5.9	0.8			12.4	12.4500	3.76462	427.161	1.30357	1.31069	1.31137
Thermal Conductivity	Btu/(h ft °F)	0.0	0.0	0.0	0.0	0.0	0.0	0.0			0.0	0.0170802	0.0111591	0.0122446	0.0174408	0.0174588	0.0175405
Surface Tension	lbf/ft																
Net IG Heating Value	Btu/ft^3	1069.7	1139.7	1137.3	1137.3	1628.5	1628.5	1141.9			1068.4	1096.43	2140.96	46.0019	1136.66	1142.29	1140.16

Net Liquid Heating Value	Btu/lb	19720.8	20691.5	20730.6	20730.6	19850.6	19850.6	20664.2			19828.5	19928.6	18775.7	-36.8211	20691.5	20730.6	20699.6	
Gross LC. Heating Value	Btu/ft^3	1197.2	1255.4	1254.0	1254.0	2101.8	2101.8	1256.8			1212.4	1212.42	2329.34	98.4548	1255.44	1254.0	1256.73	
Gross Liquid Heating Value	Btu/lb	21798.0	22753.4	22824.7	22864.7	21646.1	21646.1	22806.7			22008.0	22008.0	21532.3	1051.0	22753.4	22864.7	22824.3	

Process Streams		Well Stream	HP Separator Gas	HP Separator Water	HP Separator Oil	OT Flash Gas	Sales Oil	Gas	Water	Oil	Produced Water	PWT Flash Gas	Oil WB	Water WB	1	2	3
Phase: Light Liquid	Status	Solved	Solved	Solved	Solved	Solved	Solved	Solved	Solved	Solved	Solved	Solved	Solved	Solved	Solved	Solved	Solved
Mole Fraction		%	%	%	%	%	%	%	%	%	%	%	%	%	%	%	%
Water		99.9769	99.9769	99.9769	0.0564121	0.0106356	0.0106356		100	0	99.9969	99.9969	8.88995E-06	100.0000	99.9769	0.05841_1	0.0652814
H2S		0	0	0	0	0	0		0	0	0	0	0	0	0	0	0
Nitrogen		5.85540E-05	5.42548E-05	2.20008E-05	0.00252016	3.99169E-05	3.99169E-05		0	0	1.15368E-05	1.15368E-05	3.25177E-06	6.60097E-10	5.48548E-05	0.00282016	0.00284479
Carbon Dioxide		0.000389462	0.000678326	0.000564709	0.0217181	0.00736819	0.00736819		0	0.012	0.000394270	0.000394270	0.00848239	1.51638E-05	0.000659326	0.0217181	0.0218584
Methane		0.0170402	0.0172214	0.0172442	3.28233	0.136121	0.136121		0	3.547	0.00177491	0.00177491	0.0531690	2.60911E-06	0.0172214	3.28333	3.19342
Ethane		0.00283658	0.00363661	0.00368278	2.77603	0.817170	0.817170		0	3.941	0.000434283	0.000434283	1.87820	6.37861E-07	0.00363661	2.78303	3.75948
Propane		0.000659071	0.00123166	0.00122197	4.23756	2.25563	2.25563		0	4.238	0.000157249	0.000157249	3.68453	5.65592E-08	0.0012348	4.23756	4.23424
Isobutane		0.07743E-03	5.14564E-05	4.36362E-05	1.31599	1.03776	1.03776		0	1.313	2.37831E-05	2.37831E-05	1.68832	1.07554E-10	5.14564E-05	1.31599	1.31407
n-Butane		0.000162839	0.000232355	0.000206381	3.70612	3.21268	3.21268		0	3.695	2.09779E-05	2.09779E-05	5.06688	1.42872E-09	0.000232355	3.70612	3.70796
Isopentane		2.53408E-05	4.94017E-05	3.85570E-05	2.61873	2.37064	2.37064		0	2.64	2.77449E-06	2.77449E-06	1.06530	4.75868E-11	4.9_013E-05	2.64373	2.65150
n-Pentane		2.58192E-05	3.73042E-05	5.14933E-05	4.68693	5.05431	5.05431		0	4.673	3.67126E-06	3.67126E-06	7.76315	4.59222E-11	3.73042E-05	4.68593	4.69134
2-Methylpentane		0	0	4.02933E-06	2.01888	2.16762	2.16762		0	2.013	1.41937E-07	1.41937E-07	0.21220	3.40129E-13	0	2.01888	2.02144
3-Methylpentane		0	0	6.46819E-06	1.31343	1.42807	1.42807		0	1.31	5.83646E-07	5.83646E-07	2.06926	3.39107E-12	0	1.31343	1.31509
n-Hexane		1.92367E-05	2.53190E-06	4.00550E-06	3.52440	3.85449	3.85449		0	3.511	1.13121E-07	1.13124E-07	0.383228	1.05107E-14	2.53190E-06	3.52440	3.52698
Methylcyclopentane		0	0	1.00101E-05	0.826548	0.904814	0.904814		0	0.825	2.29655E-06	2.29655E-06	1.22423	2.85994E-11	0	0.826548	0.827627
Benzene		0	0	9.40622E-06	0.158466	0.173526	0.173526		0	0.168	8.81433E-05	8.81433E-05	0.0144110	3.37451E-09	0	0.158466	0.158557
3-Methylhexane		0	0	1.11476E-06	2.07754	2.30387	2.30387		0	2.071	3.34240E-08	3.34240E-08	0.214284	1.31841E-15	0	2.07754	2.08033
2,2,4-Trimethylpentane		0	0	9.31345E-07	1.74751	1.93852	1.93852		0	1.742	2.91485E-08	2.91485E-08	2.71428	1.72366E-14	0	1.74751	1.74966
Heptane		0	0	2.16036E-06	4.87746	5.42227	5.42227		0	4.862	6.79787E-08	6.79787E-08	6.96930	2.95376E-14	0	4.87746	4.88104
Methylcyclohexane		0	0	8.93187E-06	3.48827	3.87850	3.87850		0	3.479	1.46894E-06	1.46894E-06	5.03728	3.89435E-12	0	3.46927	3.46395
Toluene		0	0	0.000103065	0.795568	0.885700	0.885700		0	0.804	9.53350E-05	9.53350E-05	0.158717	1.76436E-09	0	0.795568	0.796324
Octane		0	0	9.34816E-07	11.4609	12.8162	12.8162		0	11.431	1.96182E-08	1.96182E-08	16.5158	1.68864E-15	0	11.4680	11.4837
Ethylbenzene		0	0	2.44961E-06	0.822401	0.895790	0.895790		0	0.823	2.24756E-05	2.24756E-05	0.212840	2.35168E-10	0	0.822401	0.823201
m-Xylene		0	0	9.21482E-06	0.956665	1.06983	1.06983		0	0.957	2.95807E-06	2.95807E-06	0.400567	3.45761E-10	0	0.956668	0.957872
p-Xylene		0	0	3.96963E-06	0.980945	1.09718	1.09718		0	0.982	3.72744E-06	3.72744E-06	0.408488	4.55438E-10	0	0.980945	0.982140
Nonane		0	0	3.02255E-07	7.13208	7.98328	7.98328		0	7.109	9.96407E-09	9.96407E-09	2.74432	4.01156E-16	0	7.13208	7.14185
C10		0	0	2.38844E-09	34.0645	38.1601	38.1601		0	33.954	6.01397E-11	6.01397E-11	26.6037	0	0	34.0645	34.1113
Molar Flow		lbmol/h	lbmol/h	lbmol/h	lbmol/h	lbmol/h	lbmol/h	lbmol/h	lbmol/h	lbmol/h	lbmol/h	lbmol/h	lbmol/h	lbmol/h	lbmol/h	lbmol/h	lbmol/h
Water		4355.77	0	4356.74	0.0289276	0	0.00427116		4858.11	0	4858.71	0	0	0	4858.76	0	0.0296066
H2S		0	0	0	0	0	0		0	0	0	0	0	0	0	0	0
Nitrogen		0.00255087	0	0.00100920	0.0012807_	0	1.61823E-05		0	0	5.65407E-05	0	0	0	0.0025568	0	0.00119947
Carbon Dioxide		0.0170075	0	0.0274481	0.00988226	0	0.00126142		0	0.0051574	0.0191670	0	0	0	0.0324425	0	0.00991328
Methane		0.744094	0	0.838048	1.49111	0	0.0551838		0	1.21610	0.0862401	0	0	0	0.8_8942	0	1.44629
Ethane		0.123898	0	0.178779	1.71941	0	0.331263		0	1.75005	0.0211017	0	0	0	0.171876	0	1.70501
Propane		0.0243693	0	0.0593681	1.72447	0	0.914644		0	1.93093	0.00764060	0	0	0	0.0600042	0	1.92033
Isobutane		0.00134382	0	0.00236512	0.597716	0	0.420711		0	0.598234	0.000115653	0	0	0	0.0029007_	0	0.596887
n-Butane		0.00711070	0	0.0100899	1.68312	0	1.30250		0	1.68353	0.00101929	0	0	0	0.0112922	0	1.68165
Isopentane		0.00110655	0	0.00187362	1.20291	0	1.08277		0	1.20285	0.00013480_	0	0	0	0.0024008_	0	1.20252
n-Pentane		0.00112745	0	0.0025025_	2.21892	0	2.00411		0	2.22025	0.00017851	0	0	0	0.0016129_	0	2.21834
2-Methylpentane		0	0	0.00019562_	0.916868	0	0.986865		0	0.917170	6.89653E-06	0	0	0	0	0	0.916768
3-Methylpentane		0	0	0.00031394	0.596489	0	0.578941		0	0.596687	2.83585E-05	0	0	0	0	0	0.596425
n-Hexane		0.000840141	0	0.000194662	1.60059	0	1.56202		0	1.59969	5.49654E-06	0	0	0	0.0012304_	0	1.60047
Methylcyclopentane		0	0	0.00046478	0.375372	0	0.366814		0	0.375869	0.000111586	0	0	0	0	0	0.375358
Benzene		0	0	0.00457130	0.0719677	0	0.0703177		0	0.0765448	0.00428276	0	0	0	0	0	0.0719083
3-Methylhexane		0	0	5.41742E-05	0.943508	0	0.933554		0	0.943596	1.62403E-06	0	0	0	0	0	0.943479
2-Methylhexane		0	0	4.52622E-05	0.793523	0	0.786001		0	0.793686	1.41828E-06	0	0	0	0	0	0.793600
Heptane		0	0	0.000104991	2.21506	0	2.18520		0	2.21524	3.30298E-05	0	0	0	0	0	2.21503
Methylcyclohexane		0	0	0.000434078	1.58464	0	1.57249		0	1.58511	7.14222E-05	0	0	0	0	0	1.58459
Toluene		0	0	0.00500960	0.361304	0	0.359085		0	0.366321	0.00463219	0	0	0	0	0	0.361161
Octane		0	0	4.54309E-05	5.20814	0	5.19572		0	5.20823	9.53221E-07	0	0	0	0	0	5.20810
Ethylbenzene		0	0	0.00119048	0.282661	0	0.282075		0	0.283033	0.00109206	0	0	0	0	0	0.282636
m-Xylene		0	0	0.00151241	0.434467	0	0.433713		0	0.436032	0.00143729	0	0	0	0	0	0.434417
p-Xylene		0	0	0.00192773	0.445462	0	0.444801		0	0.447422	0.00181111	0	0	0	0	0	0.445423
Nonane		0	0	1.46810E-05	3.23900	0	3.23644		0	3.23903	4.84139E-07	0	0	0	0	0	3.23870
C10		0	0	1.16075E-07	15.4702	0	15.4702		0	15.4702	2.43622E-09	0	0	0	0	0	15.4702
Mass Fraction		%	%	%	%	%	%	%	%	%	%	%	%	%	%	%	%
Water		99.9768	99.9727	99.9712	0.00639660	0.00139567	0.00139567		100	0	99.9948	99.9948	1.29652E-06	100.0000	99.9727	0.00839659	0.00937366

Mass Density	lb/ft3	60.2	62.3	62.3	48.7	47.0	47.0		57.3	61.8	62.2	62.2170	45.8929	62.2179	62.2656	43.6747	46.6057
Molar Flow	lbmol/h	4366.7	0.0	4859.9	45.4	0.0	40.6		4886.1	35.8	4858.9	0	0	0	4838.99	0	45.3023
Mass Flow	lb/h	262909	0.0	287556.7	5691.6	0.0	5313.2		288024.6	5695.7	287356.5	0	0	0	287565.9	0	5669.10
Vapor Volumetric Flow	MCFH	1.3	0.0	1.4	0.1	0.0	0.1		1.5	0.1	1.4	0	0	0	1.39617	0	0.122219
Liquid Volumetric Flow	M/bbl/d	5.6	0.0	6.0	0.5	0.0	0.5		6.8	0.6	6.0	0	0	0	6.01076	0	0.522435
Std Vapor Volumetric Flow	MMSCFD	39.8	0.0	44.3	0.4	0.0	0.4		44.5	0.4	44.3	0	0	0	44.3820	0	0.413052
Std Liquid Volumetric Flow	M/bbl/d	5.4	0.0	6.0	0.5	0.0	0.5		6.0	0.5	6.0	0	0	0	6.00409	0	0.620393
Compressibility		0.009	0.007	0.007	0.063	0.007	0.007		0.008	0.130	0.001	0.000740331	0.00924190	2.08103E-05	0.00660550	0.0631550	0.0628699
Specific Gravity		0.966	0.998	0.998	0.748	0.754	0.754		0.929	0.806	0.998	0.997693	0.735829	0.997577	0.998742	0.748364	0.746471
API Gravity		10.0	10.0	10.0	56.4	54.4	54.4		10.0	56.2	10.0	10.0155	58.6787	10.0135	10.0357	56.4043	56.3589
Enthalpy	MMBtu/h	-527.3	0.0	-597.7	-4.7	0.0	-4.5		-560.8	-4.3	-597.2	0	0	0	-597.727	0	-4.70936
Mass Enthalpy	Btu/lb	-8703.0	-8226.8	-8228.7	-829.9	-811.8	-811.6		-8581.5	-761.8	-8322.4	-8312.36	-853.325	-8322.67	-8326.80	-829.883	-827.640
Mole Cp	Btu/(lb*°F)	1.0	1.0	1.0	0.5	0.5	0.5		1.0	0.6	1.0	0.982733	0.464137	0.982746	0.983099	0.477973	0.480568
Ideal Gas CpCv Ratio		1.320	1.326	1.326	1.045	1.041	1.041		1.318	1.037	1.326	1.32555	1.04174	1.32556	1.32682	1.04463	1.04415
Dynamic Viscosity	cP	0.3	1.0	1.0	0.7	0.8	0.8		0.2	0.3	0.9	0.824441	0.653899	0.824406	0.985642	0.717391	0.696578
Kinematic Viscosity	cSt	0.3	1.0	1.0	1.0	1.1	1.1		0.2	0.5	0.9	0.827576	0.888531	0.827563	0.986136	0.959639	0.934040
Thermal Conductivity	Btu/(h*ft*°F)	0.4	0.3	0.3	0.1	0.1	0.1		0.4	0.1	0.3	0.349782	0.0693588	0.349835	0.346728	0.0696140	0.0693305
Surface Tension	lbf/	0.004	0.005	0.005	0.002	0.002	0.002		0.002	0.001	0.005	0.00499713	0.00159087	0.00499737	0.00504057	0.00160125	0.00158514
Net LC Heating Value	Btu/ft3	0.2	0.3	0.3	6262.8	6784.0	6784.0		0.0	6249.1	0.0	0.0398382	6182.39	3.74622E-05	0.255318	6262.64	6269.55
Net Liquid Heating Value	MJ/h	-1054.8	-1054.1	-1053.8	18796.5	18762.4	18762.4		-1059.8	18799.9	-1058.9	-1058.87	18856.7	-1059.16	-1054.11	18796.5	18785.8
Gross LC Heating Value	Btu/ft3	50.5	50.6	50.6	6713.0	7267.4	7267.4		50.3	6697.3	50.4	50.3515	6634.18	50.3100	50.1769	6713.02	6720.16
Gross Liquid Heating Value	Btu/lb	5.2	5.9	6.2	20158.7	20110.5	20110.5		0.0	20164.6	0.9	0.901404	20246.0	0.000842457	5.91270	20158.7	20157.9

Process Streams		Well Stream	HP Separator Gas	HP Separator Water	HP Separator Oil	OT Flash Gas	Sales Oil	Gas	Water	Oil	Produced Water	PWT Flash Gas	Oil WB	Water WB	1	2	3
Phase: Heavy Liquid	Status	Solved	Solved	Solved	Solved	Solved	Solved	Solved	Solved	Solved	Solved	Solved	Solved	Solved	Solved	Solved	Solved
Mole Fraction		%	%	%	%	%	%	%	%	%	%	%	%	%	%	%	%
Water					99.9706											99.9788	99.9773
H2S					0											0	0
Nitrogen					2.20009E-05											2.20009E-05	2.01714E-05
Carbon Dioxide					0.000564783											0.000564789	0.000580856
Methane					0.0172442											0.0172442	0.0165625
Ethane					0.00368278											0.00368278	0.00364071
Propane					0.00122197											0.00122197	0.00120018
Isobutane					4.06682E-05											4.86682E-05	4.80220E-05
n-Butane					0.000206381											0.000206331	0.000210799
Isopentane					3.85570E-05											3.8557.0E-05	3.91856E-05
n-Pentane					5.14933E-05											5.14933E-05	5.33203E-05
2-Methylpentane					4.02533E-06											4.02533E-06	4.23380E-06
3-Methylpentane					6.46016E-06											6.46916E-06	6.72985E-06
n-Hexane					4.00550E-06											4.00550E-06	4.21917E-06
Methylcyclopentane					1.00101E-05											1.00101E-05	1.00095E-05
Benzene					9.40822E-05											9.40822E-05	9.51685E-05
Cyclohexane					1.11476E-06											1.11476E-06	1.12618E-06
2-Methylhexane					9.31345E-07											9.313.0E-07	9.49309E-07
Heptane					2.16036E-06											2.16036E-06	2.11953E-06
Methylcyclohexane					8.93187E-06											8.93187E-06	8.22525E-06
Toluene					0.000103063											0.000103065	0.000106089
Octane					9.34816E-07											9.34816E-07	9.94336E-07
Ethylbenzene					2.44961E-05											2.44961E-05	2.49713E-05
m-Xylene					3.21492E-05											3.21492E-05	3.31245E-05
o-Xylene					3.87883E-05											3.97853E-05	4.10407E-05
Nonane					3.02292E-07											3.02292E-07	3.21706E-07
C10					2.3884E-09											2.38844E-09	2.61536E-09
Molar Flow		lbmol/h	lbmol/h	lbmol/h	lbmol/h	lbmol/h	lbmol/h	lbmol/h	lbmol/h	lbmol/h	lbmol/h	lbmol/h	lbmol/h	lbmol/h	lbmol/h	lbmol/h	lbmol/h
Water					0											0	4858.73
H2S					0											0	0
Nitrogen					0											0	0.000980003
Carbon Dioxide					0											0	0.0272867
Methane					0											0	0.804908
Ethane					0											0	0.177421
Propane					0											0	0.0584277
Isobutane					0											0	0.0093612
n-Butane					0											0	0.0102443
Isopentane					0											0	0.00190436

n-Pentane					0											0	0.00259128
2-Methylpentane					0											0	0.000205761
3-Methylpentane					0											0	0.000227044
n-Hexane					0											0	0.000265045
Methylcyclopentane					0											0	0.000488446
Benzene					0											0	0.00462503
2-Methylhexane					0											0	5.47309E-05
3-methylhexane					0											0	4.58297E-05
Heptane					0											0	0.000103005
Methylcyclohexane					0											0	0.000402532
Toluene					0											0	0.00517575
Octane					0											0	4.53231E-05
Ethylbenzene					0											0	0.00121357
m-Xylene					0											0	0.00160960
o-Xylene					0											0	0.00199460
Nonane					0											0	1.56344E-05
Cl6					0											0	1.27102E-07
Mass Fraction	%	%	%	%	%	%	%	%	%	%	%	%	%	%	%	%	%
Water				99.9712												99.9712	99.9719
H2S				0												0	0
Nitrogen				3.42067E-05												3.42067E-05	3.13550E-05
Carbon Dioxide				0.00137965												0.00137965	0.00137004
Methane				0.0133550												0.0133550	0.0147479
Ethane				0.00614655												0.00614655	0.00608987
Propane				0.00279082												0.00279082	0.00294256
Isobutane				0.000157002												0.000157002	0.000155085
n-Butane				0.000695805												0.000695805	0.000730057
Isopentane				0.000154407												0.000154407	0.000156924
n-Pentane				0.000206213												0.000206213	0.000213929
2-Methylpentane				1.92540E-05												1.92540E-05	2.02517E-05
3-Methylpentane				3.09434E-05												3.09434E-05	3.21887E-05
n-Hexane				1.91591E-05												1.91591E-05	2.01811E-05
Methylcyclopentane				4.67e03E-05												4.67e03E-05	4.67576E-05
Benzene				0.000407819												0.000407819	0.000412818
2-Methylhexane				6.20005E-06												6.20005E-06	6.26357E-06
3-methylhexane				5.17991E-06												5.17991E-06	5.24490E-06
Heptane				1.20154E-05												1.20154E-05	1.17883E-05
Methylcyclohexane				4.86775E-05												4.86775E-05	5.02779E-05
Toluene				0.000527195												0.000527195	0.000542558
Octane				5.92702E-06												5.92702E-06	8.30439E-06
Ethylbenzene				0.000144348												0.000144349	0.000147149
m-Xylene				0.000189447												0.000189447	0.000195184
o-Xylene				0.000233743												0.000233743	0.000241877
Nonane				2.15197E-06												2.15197E-06	2.28016E-06
C16				2.67927E-08												2.67927E-08	2.93382E-08
Mass Flow	lb/h	lb/h	lb/h	lb/h	lb/h	lb/h	lb/h	lb/h	lb/h	lb/h	lb/h	lb/h	lb/h	lb/h	lb/h	lb/h	lb/h
Water				0												0	87531.4
H2S				0												0	0
Nitrogen				0												0	0.0274532
Carbon Dioxide				0												0	1.19955
Methane				0												0	12.9127
Ethane				0												0	5.33188
Propane				0												0	2.57841
Isobutane				0												0	0.138413
n-Butane				0												0	0.663431
Isopentane				0												0	0.137397
n-Pentane				0												0	0.188957
2-Methylpentane				0												0	0.0177316
3-Methylpentane				0												0	0.0281632
n-Hexane				0												0	0.0176698
Methylcyclopentane				0												0	0.0408391
Benzene				0												0	0.361270
2-Methylhexane				0												0	0.00548414
3-Methylhexane				0												0	0.0045223

Heptane					0											0	0.0103214
Methylcyclohexane					0											0	0.0440199
Toluene					0											0	0.475042
Octane					0											0	0.00551967
Ethylbenzene					0											0	0.128838
m-Xylene					0											0	0.170904
o-Xylene					0											0	0.211778
Nonane					0											0	0.00200519
C10+					0											0	2.56873E-05

Process Streams		Well Stream	HP Separator Gas	HP Separator Water	HP Separator Oil	OT Flash Gas	Sales Oil	Gas	Water	Oil	Produced Water	PWT Flash Gas	Oil W/B	Water W/B	1	2	3
Phase, Heavy Liquid	Status	Solved	Solved	Solved	Solved	Solved	Solved	Solved	Solved	Solved	Solved	Solved	Solved	Solved	Solved	Solved	Solved
Property	Units																
Temperature	°F				70.0											70	74.3415
Pressure	psia				119											119	119
Mole Fraction Vapor	%				0											0	0
Mole Fraction Light Liquid	%				0											0	0
Mole Fraction Heavy Liquid	%				100											100	100
Molecular Weight	lb/lb mol				18.0											18.0162	18.0163
Mass Density	lb/ft^3				62.3											62.2656	62.2245
Molar Flow	lbmol/h				0.0											0	4859.84
Mass Flow	lb/h				0.0											0	87556.1
Liquid Volumetric Flow	MCFH				0.0											0	1.40710
Liquid Volumetric Flow	Mbbl/d				0.0											0	6.01478
Std Vapor Volumetric Flow	MMSCFD				0.0											0	44.2616
Std Liquid Volumetric Flow	Mbbl/d				0.0											0	6.00404
Compressibility					0.007											0.00680553	0.00675471
Specific Gravity					0.996											0.998341	0.997683
API Gravity					10.0											10.0357	10.0344
Enthalpy	mMBtu/h				0.0											0	-597.348
Mass Enthalpy	Btu/lb				-6526.7											-6828.70	-6822.46
Mass Cp	Btu/(lb °F)				1.0											0.983093	0.982775
Ideal Gas CpCv Ratio					1.326											1.32582	1.32581
Dynamic Viscosity	cP				1.0											0.995535	0.942331
Kinematic Viscosity	cSt				1.0											0.998132	0.946943
Thermal Conductivity	Btu/(hf°F)				0.3											0.346719	0.348732
Surface Tension	lbf/ft				0.005											0.00504088	0.00500772
Net Liq. Heating Value	Btu/ft^3				0.3											0.270083	0.263[illegible]6
Net Liquid Heating Value	Btu/lb				-1053.8											-1053.79	-1053.93
Gross Liq. Heating Value	Btu/ft^3				50.6											50.5[illegible]	50.5[illegible]
Gross Liquid Heating Value	Btu/lb				6.2											6.2	6.1

Attachment J

Class I Legal Advertisement

Attachment J

Air Quality Permit Notice
Notice of Application
Osborne Well Pad
Antero Resources Corporation
Ritchie County, West Virginia

Notice is given that Antero Resources Corporation has applied to the West Virginia Department of Environmental Protection, Division of Air Quality, for a General Permit Registration for an Oil and Natural Gas facility located near 0.61 mile northwest from the intersection of Co. Rd 9 (Harrisville Pullman Oxford and Co. Rd 22 (White Oak) in Ritchie County, West Virginia.

The latitude and longitude coordinates are: 39.207791 degrees N and -80.876418 degrees W

The applicant estimates the potential to discharge the following Regulated Air Pollutants will be:

Pollutants	TOTALS (tpy):
VOC	33.6820
NO_X	7.6179
CO_{2e}	9924.7000
CO	29.9600
SO_2	0.0323
$PM_{2.5}$	0.4659
PM_{10}	5.6874
Lead	3.12E-05
Total HAPs	1.8349
Benzene	0.0303
Formaldehyde	0.0255
Xylenes	0.2552

Startup in operation is planned to begin in November 2015. Written comments will be received by the West Virginia Department of Environmental Protection, Division of Air Quality, 601 57th Street, SE, Charleston, WV 25304, for at least 30 calendar days from the date of publication of this notice.

Any questions regarding this permit application should be directed to the DAQ at (304) 926-0499, extension 1227, during normal business hours.
Dated this the __ day of _____ _____, 2015

By: Antero Resources Corporation
Donald Gray
Environmental and Regulatory Manager
1615 Wynkoop Street
Denver, CO 80202

Attachment K

Electronic Submittal

Attachment K

Electronic Submittal
Osborne Well Pad
Antero Resources Corporation
Ritchie County, West Virginia

No electronic submission was made.

Attachment L

General Permit Registration Application Fee

Attachment M

Siting Criteria Waiver

Attachment M

Siting Waiver
Osborne Well Pad
Antero Resources Corporation
Ritchie County, West Virginia

A Siting Waiver form is not required because there are no occupied dwelling structures within 300 feet of Osborne Well Pad.

Attachment N

Material Safety Data Sheet

Attachment N

Description of Material Safety Data Sheets (MSDS)
Osborne Well Pad
Antero Resources Corporation
Ritchie County, West Virginia

Three generic Material Safety Data Sheets (MSDS), and analysis of the condensate and produced water of a similar well with the same formation are provided. Antero Resources Corporation has developed its own MSDS for these materials.

1. Natural Gas: The MSDS for natural gas reflects pipeline quality odorized gas. This is essentially the same as the material delivered to the metering and downstream gathering lines from the Antero well pad.
2. Condensate: Condensate is the hydrocarbon liquid that has been separated from raw natural gas through the well pad gas production unit. The liquid is often characterized as having a gasoline-like odor and consistency.
3. Produced Water: Produced water is primarily groundwater with residual trace hydrocarbons that has been withdrawn from the ground during the gas extraction process and then separated from the natural gas and condensate in the gas production units.

Antero Resources SAFETY DATA SHEET

Material Name: Dry Field Natural Gas **US GHS**

SYNONYMS: **CNG, Natural Gas, Methane.**

* * * Section 1 – PRODUCT AND COMPANY IDENTIFICATION * * *

PRODUCT NAME: **Dry Field Natural Gas**
PRODUCT CODES: **CAS Reg. No. 68410-63-9**

EMERGENCY PHONE: **(800) 878-1373**
AFTER HOURS: **(800) 878-1373**

PRODUCER: **Antero Resources**
ADDRESS: **1615 Wynkoop Street**
Denver, Colorado 80202

CHEMTREC PHONE: **(800) 424-9300**

* * * Section 2 – HAZARDS IDENTIFICATION * * *

GHS Classification:

Flammable Gas – Category 1.
Gases Under Pressure – Gas.
Specific Target Organ Systemic Toxicity (STOT) – Single Exposure Category 2.

GHS LABEL ELEMENTS

Symbol(s)

Signal Word

Danger

Hazard Statements

Extremely flammable gas.
Contains gas under pressure, may explode if heated.
May cause damage to central nervous and respiratory systems.

Precautionary Statements

Prevention

Keep away from heat/sparks/open flames/hot surfaces. No smoking.
Do not breathe fume/gas/mist/vapors/spray.
Wash thoroughly after handling.
Do not eat, drink or smoke when using this product.

Response

Leaking gas fire: Do not extinguish, unless leak can be stopped safely. Eliminate all ignition sources if safe to do so.

If exposed to gas, or concerned about possible exposure: Call a POISON CENTER or doctor/physician.

Storage

Protect from sunlight. Store in a well-ventilated place.

Store in a secure area.

Disposal

Dispose of contents/containers in accordance with local/regional/national/international regulations.

* * * Section 3 – COMPOSITION / INFORMATION ON INGREDIENTS * * *

CAS #	Component	Percent
74-82-8	Methane	95.01
78-84-0	Ethane	3.99
74-98-6	Propane	0.32
106-97-8	Butanes	0.07
109-66-0	Pentanes	0.02
110-54-3	Hexanes	0.01
7727-37-9	Nitrogen	0.35
124-38-9	Carbon Dioxide	0.19
7782-44-7	Oxygen	0.03

Because natural gas is a natural product, composition can vary greatly.

* * * Section 4 – FIRST AID MEASURES * * *

First Aid: Eyes

In case of freeze burn, cover eyes to protect from light. Flush eyes with running water for at least fifteen (15) minutes. Following flushing, seek medical attention.

First Aid: Skin

Remove contaminated clothing. In case of blistering, frostbite or freeze burns, seek immediate medical attention.

First Aid: Ingestion

Risk of ingestion is extremely low. However, if oral exposure occurs, seek immediate medical assistance.

First Aid: Inhalation

Remove person to fresh air. If person is not breathing, provide artificial respiration. If necessary, provide additional oxygen once breathing is restored if trained to do so. Seek medical attention immediately.

* * * Section 5 – FIRE FIGHTING MEASURES * * *

NFPA 704 Hazard Class

Health: **1** Flammability: **4** Instability: **0** (0-Minimal, 1-Slight, 2-Moderate, 3-Serious, 4-Severe)

General Fire Hazards

See Section 9 for Flammability Properties.

Forms a flammable mixture with air. If released, the resulting vapors will disperse with the prevailing wind. If a source of ignition is present where the vapor exists at a 5 – 15% concentration in air, the vapor will burn along the flame front toward the source of the fuel.

Hazardous Combustion Products

Carbon monoxide, carbon dioxide and non-combusted hydrocarbons (smoke).

Extinguishing Media

Any extinguisher suitable for Class B fires, dry chemical, fire fighting foam, CO_2, and other gaseous agents. However, fire should not be extinguished unless flow of gas can be immediately stopped.

Unsuitable Extinguishing Media

None.

Fire Fighting Equipment / Instructions

Gas fires should not be extinguished unless flow of gas can be immediately stopped. Shut off gas source and allow gas to burn out. If spill or leak has not ignited, determine

if water spray may assist in dispersing gas or vapor to protect personnel attempting to stop leak. Use water to cool equipment, surfaces and piping exposed to fire and excessive heat. For large fire, the use of unmanned hose holders or monitor nozzles may be advantageous to further minimize personnel exposure. Isolate area, particularly around piping. Let the fire burn unless leak can be stopped. Concentrate fire-fighting efforts on objects / materials ignited by the initial fire. Withdraw immediately in the event of a rising sound from a venting safety device.

Firefighting activities that may result in potential exposure to high heat, smoke or toxic by-products of combustion should require NIOSH-approved pressure-demand self-contained breathing apparatus with full facepiece and full protective clothing.

* * * Section 6 – ACCIDENTAL RELEASE MEASURES * * *

Recovery and Neutralization

Stop the source of the release, if safe to do so.

Materials and Methods for Clean-Up

Consider the use of water spray to disperse gas vapors. Do not use water spray to direct gas vapors toward sewer or drainage systems. Isolate the area until gas has dispersed. Ventilate and gas test area before entering.

Emergency Measures

Evacuate nonessential personnel and secure all ignition sources. No road flares, smoking or flames in hazard area. Consider wind direction. Stay upwind and uphill, if possible. Vapor cloud may be white, but color will dissipate as cloud disperses. Fire and explosion hazard is still present.

Personal Precautions and Protective Equipment

Cooling effect of expanding gas from leak may present frostbite / freeze burn hazard. Wear flame retardant (FR) clothing around un-ignited leak. Wear fire protective clothing around an active fire.

Environmental Precautions

Do not flush gas vapors toward sewer or drainage systems.

Prevention of Secondary Hazards

None.

* * * Section 7 – HANDLING AND STORAGE * * *

Handling Procedures

Keep away from flame, sparks and excessive temperatures. Bond and ground containers. Use only in well ventilated areas.

Storage Procedures

Natural gas will be contained in the pipeline. Keep away from flame, sparks, excessive temperatures and open flames. Empty pipeline segments may contain explosive residues from natural gas liquids. Do not cut, heat, weld or expose containers to sources of ignition sections of pipeline unless the sections have been purged of natural gas residues.

Incompatibilities

Keep away from strong oxidizers, ignition sources and heat.

* * * Section 8 – EXPOSURE CONTROLS / PERSONAL PROTECTION * * *

Component Exposure Limits

Methane (74-82-8)

ACGIH: 1000 ppm TWA (listed under Aliphatic hydrocarbon gases : Alkane C1-4)

Ethane (74-84-0)

ACGIH: 1000 ppm TWA (listed under Aliphatic hydrocarbon gases : Alkane C1-4)

Propane (74-98-6)

ACGIH: 2500 ppm TWA (listed under Aliphatic hydrocarbon gases : Alkane C1-4)

Butane (106-97-8)

ACGIH: 800 ppm TWA (listed under Aliphatic hydrocarbon gases : Alkane C1-4)

Pentanes (109-66-0)

ACGIH: 600 ppm TWA (listed under Pentane, all isomers)

Hexanes (110-54-3)

ACGIH: 50 ppm TWA (listed under n-Hexane)

Nitrogen (7727-37-9)
Simple Asphyxiant

Carbon Dioxide (124-38-9)
ACGIH: 5000 ppm TWA (listed under Carbon Dioxide)

Oxygen (7782-44-7)
N/A – Necessary for life

Engineering Measures
Use adequate ventilation to keep gas and vapor concentrations of this product below occupational exposure and flammability limits, particularly in confined spaces. Use explosion-proof equipment and lighting in classified / controlled areas.

Personal Protective Equipment: Respiratory
Use a NIOSH approved positive-pressure, supplied air respirator with escape bottle or self-contained breathing apparatus (SCBA) for gas concentrations above occupational exposure limits, for potential for uncontrolled release, if exposure levels are not known, or in an oxygen-deficient atmosphere. CAUTION: Flammability limits (i.e., explosion hazard should be considered when assessing the need to expose personnel to concentrations requiring respiratory protection.

Personal Protective Equipment: Hands
Use cold-impervious, insulating flame-retardant (FR) gloves where contact with pressurized gas may occur.

Personal Protective Equipment: Eyes
Where there is a possibility of pressurized gas contact, wear splash-proof safety goggles and faceshield.

Personal Protective Equipment: Skin and Body
Where contact with pressurized gas may occur, wear flame-retardant (FR) and a faceshield.

* * * Section 9 – PHYSICAL AND CHEMICAL PROPERTIES * * *

Appearance:	Colorless	**Odor:**	Odorless to slight petroleum odor
Physical State:	Gas	**pH:**	ND
Vapor Pressure:	40 atm @ -187°F (-86°C)	**Vapor Density:**	0.6
Boiling Point:	-259°F (-162°C)	**Melting Point:**	ND
Solubility (H2O):	3.5%	**Specific Gravity:**	0.4 @ -263°F (-164°C)

Evaporation Rate:	ND	**VOC:**	ND
Octanol / H2O Coeff.:	ND	**Flash Point:**	Flammable Gas
Flash Point Method:	N/A		
Lower Flammability Limit: (LFL):	3.8 – 6.5	**Upper Flammability Limit: (UFL):**	13-17
Auto Ignition:	900-1170°F (482-632°C)	**Burning Rate:**	ND

* * * Section 10 – CHEMICAL STABILITY & REACTIVITY INFORMATION * * *

Chemical Stability

This is a stable material.

Hazardous Reaction Potential

Will not occur.

Conditions to Avoid

Keep away from strong oxidizers, ignition sources and heat.

Hazardous Decomposition Products

Carbon monoxide, carbon dioxide and non-combusted hydrocarbons (smoke).

* * * Section 11 – TOXICOLOGICAL INFORMATION * * *

Acute Toxicity

A: General Product Information

Methane and ethane, the main components of natural gas, are considered practically inert in terms of physiological effects. At high concentrations these materials act as simple asphyxiants and may cause death due to lack of oxygen.

B. Component Analysis – LD50/LC50

Methane (74-82-8)

Inhalation LC50 Mouse 326 g/m3 2h

Ethane (74-84-0)

Inhalation LC50 Rat 658 mg/l 4h

Propane (74-98-6)

Inhalation LC50 Rat 658 mg/l 4h

Butanes (106-97-8)
Inhalation LC50 Rat 658 g/m3 4h

Pentanes (109-66-0)
Inhalation LD50 Rat 364 g/m3 4h

Hexanes (110-54-3)
Inhalation LC50 Rat > 20 mg/l 4h

Nitrogen (7727-37-9)
Simple Asphyxiant

Carbon Dioxide (124-38-9)
Inhalation LC50 Human 100,000 ppm 1minute

Oxygen (7782-44-7)
N/A – Necessary for life

Potential Health Effects: Skin Corrosion Property / Stimulativeness
This product is not reported to have any skin sensitization effects.

Generative Cell Mutagenicity
This product is not reported to have any mutagenic effects.

Carcinogenicity

A: General Product Information
This product is not reported to have any carcinogenic effects.

B: Component Carcinogenicity
None of this product's components are listed by ACGIH, IARC, OSHA, NIOSH, or NTP.

Reproductive Toxicity
This product is not reported to have any reproductive toxicity effects.

Specified Target Organ General Toxicity: Single Exposure
This product may cause damage to the heart.

Specified Target Organ General Toxicity: Repeated Exposure
This product is not reported to have any specific target organ repeat effects.

Aspiration Respiratory Organs Hazard
This product is not reported to have any aspiration hazard effects.

* * * Section 12 – ECOLOGICAL INFORMATION * * *

Ecotoxicity

A: General Product Information

Keep gas and vapors out of sewers, drainage areas, and waterways. Report spills and releases, as applicable under Federal and State regulations.

B: Component Analysis – Ecotoxicity – Aquatic Toxicity

No ecotoxicity data are available for this product's components.

Persistance / Degradability

No information available.

Bioaccumulation

No information available.

Mobility in Soil

No information available.

* * * Section 13 – DISPOSAL CONSIDERATIONS * * *

Waste Disposal Instructions

See Section 7 for Handling Procedures. See Section 8 for Personal Protective Equipment Recommendations.

Disposal of Contaminated Containers or Packaging

Dispose of contents / container in accordance with local / regional / national / international regulations.

* * * Section 14 – TRANSPORTATION INFORMATION * * *

DOT Information

Shipping Name: Natural Gas, Compressed

UN #: 1971 **Hazard Class:** 2.1

Placard:

* * * Section 15 – REGULATORY INFORMATION * * *

Regulatory Information

Component Analysis

None of this products components are listed under SARA Section 302 (40 CFR 355 Appendix A.
n-hexane is listed under SARA Section 313 (40 CFR 372.65). However the concentration of this component is approximately 0.01 % in compressed natural gas and is therefore far under the reporting threshold for the chemical.

n-hexane is listed under CERCLA (40 CFR 302.4). However the concentration of this component is approximately 0.01 % in compressed natural gas and is therefore far under the reporting threshold for the chemical.

SARA Section 311/312 – Hazard Classes

Acute Health	Chronic Health	Fire	Sudden Release of Pressure	Reactive
---	---	X	X	---

SARA Section 313 – Supplier Notification

This product contains one chemical (n-Hexane) that is subject to the reporting requirements of section 313 of the Emergency Planning and Community Right-to-know act (EPCRA) of 1986 and of 40 CFR 372. However the concentration of this component is approximately 0.01 % in compressed natural gas and is therefore far under the reporting threshold for the chemical.

State Regulations

Component Analysis – State

The following components appear on one or more of the following state hazardous substances lists:

Component	CAS	CA	MA	MN	NJ	PA	RI
Methane	74-82-8	No	No	Yes	Yes	Yes	No
Ethane	78-84-0	No	No	Yes	Yes	Yes	No
Propane	74-98-6	No	No	Yes	Yes	Yes	Yes
Butane	106-97-8	Yes	No	Yes	Yes	Yes	Yes
Pentanes	109-66-0	Yes	No	Yes	Yes	Yes	Yes
Hexanes	110-54-3	Yes	Yes	Yes	Yes	Yes	Yes
Nitrogen	7727-37-9	No	No	No	No	No	No
Carbon Dioxide	124-38-9	Yes	No	Yes	Yes	Yes	Yes
Oxygen	7782-44-7	No	No	No	No	No	No

SAFETY DATA SHEET

Material Name: Dry Field Natural Gas **US GHS**

* * * Section 16 – OTHER INFORMATION * * *

NFPA® Hazard Rating

Health	1
Fire	4
Reactivity	0

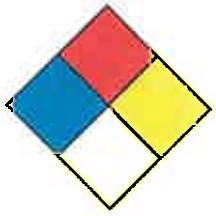

HMIS® Hazard Rating

Health	1	Moderate
Fire	4	Severe
Physical	0	Minimal
		* Chronic

Key/Legend

EPA = Environmental Protection Agency; TSCA = Toxic Substance Control Act: ACGIH = American Conference of Governmental Industrial Hygienists; IARC = International Agency for Research on Cancer; NIOSH = National Institute for Occupational Safety and Health; NTP = National Toxicology Program; OSHA = Occupational Safety and Health Administration; NJTSR = New Jersey Trade Secret Registry.

Literature References

None

Other Information

The information presented herein has been compiled from sources considered to be dependable, and is accurate and reliable to the best of our knowledge and belief, but is not guaranteed to be so. Since conditions of use are beyond our control, we make no warranties, expressed or implied, except those that may be contained in our written contract of sale or acknowledgment.

Vendor assumes no responsibility for injury to vendee or third persons proximately caused by the material if reasonable safety procedures are not adhered to as stipulated in the data sheet. Additionally, vendor assumes no responsibility for injury to vendee or third persons proximately caused by abnormal use of the material, even if reasonable safety procedures are followed. Furthermore, vendee assumes the risk in their use of the material.

Date of Preparation: **January 30, 2014**

Date of Last Revision: **March 4, 2014**

End of Sheet

Antero Resources SAFETY DATA SHEET

Material Name: Natural Gas Condensate **US GHS**

SYNONYMS: **Drips; Condensate; Field Condensate; Gas Well Condensate; High Pressure Inlet Liquids; Lease Condensate; Natural Gas Liquids; Pipeline Liquids**

* * * Section 1 – PRODUCT AND COMPANY IDENTIFICATION * * *

PRODUCT NAME: **Natural Gas Condensate**
PRODUCT CODES: **64741-47-5**

EMERGENCY PHONE: **(800) 878-1373**
AFTER HOURS: **(800) 878-1373**

PRODUCER: **Antero Resources**
ADDRESS: **1615 Wynkoop Street**
Denver, Colorado 80202

CHEMTREC PHONE: **(800) 424-9300**

* * * Section 2 – HAZARDS IDENTIFICATION * * *

GHS Classification:

Flammable Liquids – Category 2.
Acute Toxicity Inhalation – Category 3
Germ Cell Mutagenicity – Category 1B
Carcinogenicity – Category 1A
Specific Target Organ Systemic Toxicity (STOT) – Single Exposure Category 3
Specific Target Organ Systemic Toxicity (STOT) – Repeat Exposure Category 1
Aspiration Toxicity – Category 1
Toxic to the Aquatic Environment Acute – Category 3

GHS LABEL ELEMENTS

Symbol(s)

Signal Word

Danger

Hazard Statements

Highly flammable liquid and vapor.
Toxic if inhaled.
May cause genetic defects.
May cause cancer.
May cause respiratory irritation.
May cause drowsiness or dizziness.
May cause damage to organs (liver, kidneys, blood, nervous system, and skin) through prolonged or repeated exposure.
May be fatal if swallowed and enters airways.
Harmful to aquatic life.

Precautionary Statements

Prevention

Keep away from heat/sparks/open flames/hot surfaces. No smoking.
Keep container tightly closed.
Ground/bond container and receiving equipment.
Use explosion-proof electrical/ventilating/lighting equipment.
Use only non-sparking tools.
Take precautionary measures against static discharge.
Wear protective gloves/protective clothing/eye protection/face protection.
Do not breathe gas/mist/vapors/spray.
Do not handle until all safety precautions have been read and understood.
Wash thoroughly after handling.
Do not eat, drink or smoke when using this product.
Use only outdoors or in a well-ventilated area.
Avoid release to the environment.

Response

If on SKIN (or hair): Wash with plenty of soap and water. Remove / Take off all contaminated clothing immediately. Rinse skin with water/shower.
If INHALED: Remove victim to fresh air and keep comfortable for breathing. Call a poison center/doctor if the victim feels unwell.
If SWALLOWED: Immediately call a poison center or doctor / physician. Do not Induce vomiting.
If exposed or concerned: Get medical advice/attention.
In case of fire: Use water spray, fog or fire-fighting foam.

Storage

Store in a well-ventilated place. Keep cool.
Store in a secure area.

Disposal
Dispose of contents/containers in accordance with local/regional/national/international regulations.

* * * Section 3 – COMPOSITION / INFORMATION ON INGREDIENTS * * *

CAS #	Component	Percent
111-65-9	Octanes	25 - 95
142-82-5	Heptanes	25 - 95
110-54-3	Hexanes as n-Hexane	25 - 95
109-66-0	Pentanes as n-Pentane	5 - 70
106-97-8	N-butane	0 - 45
74-98-6	Propane	0 - 15
78-84-0	Ethane	0 - 5
71-43-2	Benzene	< 1
108-88-3	Toluene	< 1
1330-20-7	m-,o-,p-Xylene	< 1

Because natural gas condensate is a natural product, composition can vary greatly.

* * * Section 4 – FIRST AID MEASURES * * *

First Aid: Eyes
Flush eyes with clean running water for at least fifteen (15) minutes. Following flushing, seek medical attention.

First Aid: Skin
Remove contaminated clothing. Wash contaminated areas thoroughly with soap and water or waterless hand cleanser. Obtain medical attention if irritation or redness develops. Wash contaminated clothing before reuse.

First Aid: Ingestion (swallowing)
DO NOT INDUCE VOMITING. Do not give liquids. Obtain immediate medical attention. If spontaneous vomiting occurs, lean the victim forward to reduce the risk of aspiration. Monitor for breathing difficulties. Small amounts of material which enter the mouth should be rinsed out until the taste is dissipated.

First Aid: Inhalation (breathing)

Remove person to fresh air. If person is not breathing, provide artificial respiration. If necessary, provide additional oxygen once breathing is restored if trained to do so. Seek medical attention immediately.

* * * Section 5 – FIRE FIGHTING MEASURES * * *

NFPA 704 Hazard Class

Health: 1 **Flammability:** 4 **Instability:** 0 (0-Minimal, 1-Slight, 2-Moderate, 3-Serious, 4-Severe)

General Fire Hazards

See Section 9 for Flammability Properties.

Extremely flammable. Vapors may be ignited rapidly when exposed to heat, spark, open flame, or other source of ignition (e.g., static electricity, pilot lights, mechanical / electrical equipment, and electronic devices such as cell phones, computers, calculators, and pagers which have not been certified as intrinsically safe). Flammable vapors can burn in the open or explode in confined spaces. Vapors are heavier than air, and may travel distances to an ignition source and flash back. Runoff to sewer systems may cause fire or explosion.

Hazardous Combustion Products

Carbon monoxide, carbon dioxide and non-combusted hydrocarbons (smoke).

Extinguishing Media

SMALL FIRES: Any extinguisher suitable for Class B fires, dry chemical, firefighting foam, water spray, carbon dioxide (CO_2), or other gaseous extinguishing agents. Use caution when applying CO2 in confined spaces.

LARGE FIRES: Water spray, fog or fire-fighting foam. Water may be ineffective for fighting the fire, but may be used to cool fire-exposed containers.

Unsuitable Extinguishing Media

None

Fire Fighting Equipment / Instructions

Small fires in the beginning stage may typically be extinguished using handheld portable fire extinguishers and other firefighting equipment. Isolate area around container involved in fire. Cool tanks, shells, and containers exposed to fire and excessive heat with water. For massive fires the use of unmanned hose holders or monitor nozzles may be advantageous to minimize personnel exposure. Major fires may require withdrawal, allowing the tank to burn. Large storage tank fires typically require specially trained personnel and equipment to extinguish the fire, often including the need for properly applied firefighting foam.

Firefighting activities that may result in potential exposure to high heat, smoke or toxic by-products of combustion should require NIOSH/MSHA- approved pressure-demand self-contained breathing apparatus with full face piece and full protective clothing.

* * * Section 6 – ACCIDENTAL RELEASE MEASURES * * *

Recovery and Neutralization

Contain and stop the source of the spill, if safe to do so.

Materials and Methods for Clean-Up

Notify relevant authorities in accordance with all applicable regulations. Immediate cleanup of any spill is recommended. Dike far ahead of spill for later recovery or disposal. Absorb spill with inert material such as sand or vermiculite, and place in suitable container for disposal. If spilled on water remove with appropriate methods (e.g. skimming, booms or absorbents). In case of soil contamination, remove contaminated soil for remediation or disposal, in accordance with local regulations.

Recommended measures are based on the most likely spillage scenarios for this material; however local conditions and regulations may influence or limit the choice of appropriate actions to be taken.

Emergency Measures

Evacuate nonessential personnel and secure all ignition sources. No road flares, smoking or flames in hazard area. Consider wind direction. Stay upwind and uphill, if possible. Vapor cloud may be white, but color will dissipate as cloud disperses. Fire and explosion hazard is still present.

Personal Precautions and Protective Equipment

Response and clean-up crews must be properly trained and must utilize proper protective equipment (see Section 8). Extremely flammable. Spillages of liquid product will create a fire hazard and may form an explosive atmosphere. Keep all sources of

ignition and hot metal surfaces away from spill/release if safe to do so.

The use of explosion-proof electrical equipment is recommended. Stay upwind and away from spill/release. Avoid direct contact with material. For large spillages, notify persons downwind of the spill/release, isolate immediate hazard area and keep unauthorized personnel out. Wear appropriate protective equipment, including respiratory protection, as conditions warrant (see Section 8). See Sections 2 and 7 for additional information on hazards and precautionary measures.

Environmental Precautions

Protect bodies of water by diking, absorbents, or absorbent boom, if possible. Do not flush down sewer or drainage systems, unless system is designed and permitted to handle such material. The use of firefighting foam may be useful in certain situations to reduce vapors. If spill occurs on water notify appropriate authorities and advise shipping of any hazard. Spills into or upon navigable waters, the contiguous zone, or adjoining shorelines that cause a sheen or discoloration on the surface of the water, may require notification of the National Response Center (phone number 800-424-8802).

Prevention of Secondary Hazards

None

* * * Section 7 – HANDLING AND STORAGE * * *

Handling Procedures

Keep away from flame, sparks and excessive temperatures. Bond and ground containers. Use non-sparking tools. Use only outdoors or in well ventilated areas. Wear protective gloves / clothing and eye / face protection. Wash thoroughly after handling. Use good personal hygiene practices and wear appropriate personal protective equipment (see section 8).

Storage Procedures

Store only in approved containers. Bond and ground containers. Keep away from flame, sparks, excessive temperatures and open flames. Keep containers closed and clearly labeled. Empty product containers or vessels may contain explosive vapors. Do not pressurize, cut, heat, weld or expose containers to sources of ignition.

Store in a well-ventilated area. This storage area should comply with NFPA 30 "Flammable and Combustible Liquid Code". Avoid storage near incompatible materials. The cleaning of tanks previously containing this product should follow API Recommended Practice (RP) 2013 "Cleaning Mobile Tanks In Flammable and Combustible Liquid Service" and API RP 2015 "Cleaning Petroleum Storage Tanks."

Incompatibilities

Keep away from strong oxidizers, ignition sources and heat.

* * * Section 8 – EXPOSURE CONTROLS / PERSONAL PROTECTION * * *

Component Exposure Limits

Octanes (111-65-9)

ACGIH: 300 ppm TWA (listed under Octane, all isomers)

Heptanes (142-82-5)

ACGIH: 400 ppm TWA (listed under n-Heptane)

n-Hexane (110-54-3)

ACGIH: 20 ppm TWA (listed under n-Hexane)

n-Pentane (109-66-0)

ACGIH: 600 ppm TWA (listed under Pentane, all isomers)

n-Butane (106-97-8)

ACGIH: 600 ppm TWA (listed under n-Butane)

Propane (74-98-6)

ACGIH: 1000 ppm TWA (listed under Aliphatic hydrocarbon gases C1-C4)

Ethane (74-84-0)

ACGIH: 1000 ppm TWA (listed under Aliphatic hydrocarbon gases C1-C4)

Benzene (71-43-2)

ACGIH: 0.5 ppm (TWA); NIOSH: 0.1 ppm (TWA); OSHA 1 ppm (TWA)

Toluene (108-88-3)

ACGIH: 20 ppm TWA (listed under Toluene)

m-, o-, p-Xylene (1330-20-7)

ACGIH: 100 ppm TWA (listed under Xylene o, m & p isomers)

Engineering Measures

Use adequate ventilation to keep vapor concentrations of this product below occupational exposure and flammability limits, particularly in confined spaces. Use explosion-proof equipment and lighting in classified / controlled areas.

Personal Protective Equipment: Respiratory

Use a NIOSH-approved positive-pressure, supplied air respirator with escape bottle or self-contained breathing apparatus (SCBA) for gas concentrations above occupational exposure limits, for potential for uncontrolled release, if exposure levels are not known, or in an oxygen-deficient atmosphere (oxygen content less than 19.5 percent). A respiratory program that meets or is equivalent to OSHA 29 CFR 1910.134 and ANSI Z88.2 should be followed whenever workplace conditions warrant the use of a respirator.

If benzene concentrations equal or exceed applicable exposure limits, OSHA requirements for personal protective equipment, exposure monitoring, and training may apply (29 CFR 1910.1028 – Benzene).

CAUTION: Flammability limits (i.e., explosion hazard should be considered when assessing the need to expose personnel to concentrations requiring respiratory protection.

Personal Protective Equipment: Hands

Gloves constructed of nitrile or neoprene are recommended.

Personal Protective Equipment: Eyes

Safety glasses or goggles are recommended where there is a possibility of splashing or spraying. Eye protection that meets or exceeds ANSI Z.87.1 is recommended. Depending on conditions of use, a face shield may be necessary.

Personal Protective Equipment: Skin and Body

Chemical protective clothing such as of E.I. DuPont TyChem®, Saranex® or equivalent recommended based on degree of exposure. Note: The resistance of specific material may vary from product to product as well as with degree of exposure. Consult manufacturer specifications for further information.

Hygiene Measures

Emergency eye wash capability should be available in the near proximity to operations presenting a potential splash exposure. Use good personal hygiene practices. Avoid repeated and/or prolonged skin exposure. Wash hands before eating, drinking, smoking, or using toilet facilities. Do not use as a cleaning solvent on the skin. Do not use gasoline or solvents (naphtha, kerosene, etc.) for washing this product from

exposed skin areas. Waterless hand cleaners are effective. Promptly remove contaminated clothing and launder before reuse. Use care when laundering to prevent the formation of flammable vapors which could ignite via washer or dryer. Consider the need to discard contaminated leather shoes and gloves.

* * * Section 9 – PHYSICAL AND CHEMICAL PROPERTIES * * *

Appearance:	Colorless to straw yellow	**Odor:**	Aromatic, Gasoline;
Physical State:	Liquid	**pH:**	ND
Vapor Pressure:	110 – 200 psia (Reid VP) @ 100°F/37.8°C	**Vapor Density (air = 1):**	> 1
Boiling Point:	Approx. 85 - 437°F (39 – 200°C)	**Melting Point:**	ND
Solubility (H2O):	Insoluble to slightly soluble	**Specific Gravity:**	AP 0.62-0.76 (varies)
Evaporation Rate:	High	**VOC:**	ND
Octanol / H2O Coeff.:	ND	**Flash Point:**	-40°F -40°C
Flash Point Method:	Tag Closed Cup (TCC)		
Lower Flammability Limit: (LFL):	ND (NFPA Gasoline 1.4)	**Upper Flammability Limit: (UFL):**	ND (NFPA Gasoline 7.6)
Auto Ignition:	AP 480°F (250°C)	**Burning Rate:**	ND

* * * Section 10 – CHEMICAL STABILITY & REACTIVITY INFORMATION * * *

Chemical Stability

This is a stable material.

Hazardous Reaction Potential

Will not occur.

Conditions to Avoid

Keep away from ignition sources and high temperatures.

Hazardous Decomposition Products

Carbon monoxide, carbon dioxide and non-combusted hydrocarbons (smoke).

* * * Section 11 – TOXICOLOGICAL INFORMATION * * *

Acute Toxicity

A: General Product Information

Harmful if swallowed.

B. Component Analysis – LD50/LC50

Octanes (111-65-9)
Inhalation LC50 rat = 118,000 mg/m3 / 4H

Heptanes (142-82-5)
Inhalation LC50 rat = 103,000 mg/m3 / 4H

Hexanes as n-Hexane (110-53-3)
Inhalation LC50 rat = 48,000 ppm / 4H

Pentanes as n-Pentane (109-66-0)
Inhalation LC50 rat = 364,000 mg/m3 / 4H

Butanes as n-Butane (106-97-8)
Inhalation LC50 rat 658,000 mg/l / 4H

Propane (74-98-6)
Inhalation LC50 Rat > 800,000 ppm / 0.25H

Ethane (74-84-0)
Inhalation LC50 Rat 658,000 mg/l / 4H

Benzene (71-43-2)
Inhalation LC50 Rat 44,700 mg/m3 /

Toluene (108-88-3)
Inhalation LD50 Rat 12/5 mg/l / 4H

m-, o-, p-Xylene (1330-20-7)
Inhalation LC50 Rat 5000 ppm / 4H

Potential Health Effects: Skin Corrosion Property / Stimulativeness

May cause skin irritation with prolonged or repeated contact. Liquid may be absorbed through the skin in toxic amounts if large areas of skin are exposed repeatedly.

Potential Health Effects: Eye Critical Damage / Stimulativeness

Contact with eyes may cause moderate irritation.

Potential Health Effects: Ingestion (swallowing)

Ingestion may cause gastrointestinal disturbances, including irritation, nausea, vomiting and diarrhea, and central nervous system (brain) effects similar to alcohol intoxication. In severe cases, tremors, convulsions, loss of consciousness, coma, respiratory arrest, and death may occur.

Potential Health Effects: Inhalation (breathing)

Excessive exposure may cause irritations to the nose, throat, lungs and respiratory tract. Central nervous system (brain) effects may include headache, dizziness, loss of balance and coordination, unconsciousness, coma, respiratory failure, and death.

Respiratory Organs Sensitization / Skin Sensitization

This product is not reported to have any skin sensitization effects.

Generative Cell Mutagenicity

May cause genetic defects. Some crude oils and crude oil fractions have been positive in mutagenicity studies.

Carcinogenicity

A: General Product Information

May cause cancer.

This product contains benzene, although at very low concentrations. Human health studies indicate that prolonged and/or repeated overexposure to benzene may cause damage to the blood-forming system (particularly bone marrow), and serious blood disorders such as aplastic anemia and leukemia. Benzene is listed as a human carcinogen by the NTP, IARC, OSHA and ACGIH.

Exposure to light hydrocarbons in the same boiling range as this product have been associated in animal studies with effects to the central nervous system, peripheral nervous system, liver, and kidneys. The significance of these animal models to predict similar human response is uncertain. Observing good work practices and personal hygiene procedures (Sections 7 and 8) can minimize potential risks to humans.

B: Component Carcinogenicity

Benzene (71-43-2)

ACGIH:	A1 - Confirmed Human Carcinogen
OSHA:	5 ppm STEL (Cancer hazard, Flammable, See 29 CFR 1910.1028, 15 min); 0.5 ppm Action Level; 1 ppm TWA
NIOSH:	potential occupational carcinogen
NTP:	Known Human Carcinogen (Select Carcinogen)

IARC: Monograph 100F [in preparation]; Supplement 7 [1987]; Monograph 29 [1982] (Group 1 (carcinogenic to humans))

Reproductive Toxicity

This product is not reported to have any reproductive toxicity effects.

Specified Target Organ General Toxicity: Single Exposure

This product is not reported to have any specific target organ general toxicity single exposure effects.

Specified Target Organ General Toxicity: Repeated Exposure

May cause damage to organs (liver, kidneys, blood, nervous system and skin) through prolonged or repeated exposure.

Aspiration Respiratory Organs Hazard

The major health threat of ingestion occurs from the danger of aspiration (breathing) of liquid drops into the lungs, particularly from vomiting. Aspiration may result in chemical pneumonia (fluid in the lungs), severe lung damage, respiratory failure and even death.

* * * Section 12 – ECOLOGICAL INFORMATION * * *

Ecotoxicity

A: General Product Information

Keep out of sewers, drainage areas, and waterways. Report spills and releases, as applicable under Federal and State regulations.

B: Component Analysis – Ecotoxicity – Aquatic Toxicity

Benzene (71-43-2)

Test and Species	Conditions
96 Hr LC50 Pimephales promelas	10.7-14.7 mg/L [flow-through]
96 Hr LC50 Oncorhynchus mykiss	5.3 mg/L [flow-through]
96 Hr LC50 Lepomis macrochirus	22.49 mg/L [static]
96 Hr LC50 Poecilia reticulata	28.6 mg/L [static]
96 Hr LC50 Pimephales promelas	22330-41160 µg/L [static]
96 Hr LC50 Lepomis macrochirus	70000-142000 µg/L [static]
72 Hr EC50 Pseudokirchneriella subcapitata	29 mg/L
48 Hr EC50 Daphnia magna	8.76 - 15.6 mg/L [static]
48 Hr EC50 Daphnia magna	10 mg/L

Natural Gas condensates (68919-39-1)

Test and Species	Conditions
96 Hr LC50 Alburnus alburnus	119 mg/L [static]
96 Hr LC50 Cyprinodon variegatus	82 mg/L [static]
72 Hr EC50 Pseudokirchneriella subcapitata	56 mg/L
24 Hr EC50 Daphnia magna	170 mg/L

Persistence / Degradability

No information available

Bioaccumulation

No information available

Mobility in Soil

No information available

* * * Section 13 – DISPOSAL CONSIDERATIONS * * *

Waste Disposal Instructions

See Section 7 for Handling Procedures. See Section 8 for Personal Protective Equipment Recommendations.

Disposal of Contaminated Containers or Packaging

Recover or recycle if possible. It is the responsibility of the generator to determine the toxicity and physical properties of the material generated so as to properly classify the waste and ensure disposal methods comply with applicable regulations.
This material, if discarded should be fully characterized for ignitability (D001), reactivity (D003) and benzene (D018) prior to disposal (40 CFR261). Use which results in chemical or physical change or contamination may subject it to regulation as a hazardous waste. Along with properly characterizing all waste materials, consult state and local regulations regarding the proper disposal of this material. Do not dispose of by draining onto the ground. This will result in soil and groundwater contamination. Waste arising from spillage or tank cleaning should be disposed of in accordance with applicable regulations.

Container contents should be completely used and containers should be emptied prior to discard. Container rinsate could be considered a RCRA hazardous waste and must be disposed of with care and in full compliance with federal, state and local regulations. Larger empty containers, such as drums, should be returned to the distributor or to a qualified drum reconditioner. To assure proper disposal of smaller empty containers, consult with state and local regulations and disposal authorities.

* * * Section 14 – TRANSPORTATION INFORMATION * * *

DOT Information

Shipping Name: Petroleum Products, n.o.s. (condensate)
UN #: 1268 **Hazard Class:** 3
Additional Info.: Dependent on the product's properties, the shipper may also elect to classify as Gasoline UN1203 or Petroleum Crude Oil UN1267 - reference 49 CFR 172.101 for further description (e.g., packing group determination).

Placard:

* * * Section 15 – REGULATORY INFORMATION * * *

Regulatory Information

Component Analysis

This material contains one or more of the following chemicals required to be identified under SARA Section 302 (40 CFR 355 Appendix A), SARA Section 313 (40 CFR 372.65) and/or CERCLA (40 CFR 302.4).

Benzene (71-43-2)

SARA 313: 0.1% de minimis concentration
CERCLA: 10 lb final RQ (received an adjusted RQ of 10 lbs based on potential carcinogenicity in an August 14, 1989 final rule); 4.54 kg final RQ (received an adjusted RQ of 10 lbs based on potential carcinogenicity in an August 14, 1989 final rule)

SARA Section 311/312 – Hazard Classes

Acute Health	Chronic Health	Fire	Sudden Release of Pressure	Reactive
X	X	X	--	--

SARA SECTION 313 – SUPPLIER NOTIFICATION

This product contains the following toxic chemicals subject to the reporting requirements of section 313 of the Emergency Planning and Community Right-To-Know Act (EPCRA) of 1986 and of 40 CFR 372:

INGREDIENT NAME (CAS NUMBER)	CONCENTRATION PERCENT BY WEIGHT
Benzene (71-43-2)	<0.1 to 2

Canadian Regulatory Information

DSL/NDSL Inventory	This product has been classified in accordance with the hazard criteria of the Controlled Products Regulations (CPR) and the SDS contains all the information required by the Regulations.
Workplace Hazardous Materials Information System	B2 - Flammable Liquid D1A – Material Causing Immediate and Serious Toxic Effects - Very Toxic Material D2A: Material Causing Other Toxic Effects Very Toxic D2B - Material Causing Other Toxic Effects - Toxic Material

European Union Regulatory Information

Labeling	Product is dangerous as defined by the European Union Dangerous Substances / Preparations Directives. Contains: Low Boiling Point Naphtha
Symbol	**F+** Extremely Flammable **T** Toxic **N** Dangerous for the Environment
Risk Phrases	R12-45-38-65-67-51/53 Extremely flammable. May cause cancer. Irritating to skin. Harmful: may cause lung damage if swallowed. Vapors may cause drowsiness and dizziness. Toxic to aquatic organisms, may cause long-term adverse effects in the aquatic environment.
Safety Phrases	S16-53-45-2-23-24-29-43-62 Keep away from sources of ignition – No smoking. Avoid exposure – obtain special instructions before use. In case of accident or if you feel unwell, seek medical advice immediately (show the label where possible). Keep out of reach of children. Do not breathe vapor. Avoid contact with skin. Do not empty into drains. In case of fire use foam/dry powder/CO2. If swallowed, do not induce vomiting: seek medical advice immediately and show this container or label.

State Regulations

Component Analysis – State

The following components appear on one or more of the following state hazardous substances lists

Component	CAS	CA	MA	MN	NJ	PA	RI
Octanes	111-65-9	Yes	No	Yes	Yes	Yes	Yes
Heptanes	142-82-5	Yes	No	Yes	Yes	Yes	Yes
n-Hexane	110-54-3	Yes	Yes	Yes	Yes	Yes	Yes
n-Pentane	109-66-0	Yes	No	Yes	Yes	Yes	Yes
n-Butane	106-97-8	Yes	No	Yes	Yes	Yes	Yes
Propane	74-98-6	No	No	Yes	Yes	Yes	Yes
Ethane	78-84-0	No	No	Yes	Yes	Yes	No
Benzene	71-43-2	Yes	Yes	Yes	Yes	Yes	Yes
Toluene	108-88-3	Yes	Yes	Yes	Yes	Yes	Yes
m-, o-, p-Xylene	1330-20-7	Yes	Yes	Yes	Yes	Yes	Yes

The following statement(s) are provided under the California Safe Drinking Water and Toxic Enforcement Act of 1986 (Proposition 65):

WARNING! This product contains a chemical known to the state of California to cause cancer.

WARNING! This product contains a chemical known to the state of California to cause Reproductive / developmental effects.

Component Analysis – WHMIS IDL

The following components are identified under the Canadian Hazardous Products Act Ingredient Disclosure List:

Component	CAS #	Minimum Concentration
Benzene	71-43-2	0.1%

* * * Section 16 – OTHER INFORMATION * * *

NFPA® Hazard Rating

Health 1
Fire 4
Reactivity 0

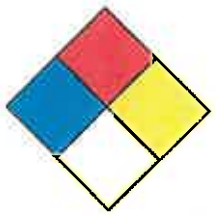

HMIS® Hazard Rating

Health	1	Slight
Fire	4	Severe
Physical	0	Minimal
		* Chronic

Key/Legend

EPA = Environmental Protection Agency; TSCA = Toxic Substance Control Act: ACGIH = American Conference of Governmental Industrial Hygienists; IARC = International Agency for Research on Cancer; NIOSH = National Institute for Occupational Safety and Health; NTP = National Toxicology Program; OSHA = Occupational Safety and Health Administration; NJTSR = New Jersey Trade Secret Registry.

Literature References

None

Other Information

The information presented herein has been compiled from sources considered to be dependable, and is accurate and reliable to the best of our knowledge and belief, but is not guaranteed to be so. Since conditions of use are beyond our control, we make no warranties, expressed or implied, except those that may be contained in our written contract of sale or acknowledgment.

Vendor assumes no responsibility for injury to vendee or third persons proximately caused by the material if reasonable safety procedures are not adhered to as stipulated in the data sheet. Additionally, vendor assumes no responsibility for injury to vendee or third persons proximately caused by abnormal use of the material, even if reasonable safety procedures are followed. Furthermore, vendee assumes the risk in their use of the material.

Date of Preparation: **January 29, 2014**

Date of Last Revision: **March 4, 2014**

End of Sheet

SAFETY DATA SHEET

Material Name: Produced Water **US GHS**

SYNONYMS: **Produced Brine Water, Brine, Brine Water, Formation Water**

* * * Section 1 – PRODUCT AND COMPANY IDENTIFICATION * * *

PRODUCT NAME:	**Produced Water**	**EMERGENCY PHONE:**	**(800) 878-1373**
PRODUCT CODES:	**Mixture**	**AFTER HOURS:**	**(800) 878-1373**
PRODUCER:	**Antero Resources**		
ADDRESS:	**1615 Wynkoop Street** **Denver, Colorado 80202**	**CHEMTREC PHONE:**	**(800) 424-9300**

* * * Section 2 – HAZARDS IDENTIFICATION * * *

GHS Classification:

Eye Irritant – Category 2A.

GHS LABEL ELEMENTS

Symbol(s)

Signal Word

Warning

Hazard Statements

Causes serious eye irritation

Precautionary Statements

Prevention

Wear protective gloves/protective clothing/eye protection/face protection.

Response

If on SKIN (or hair): Rinse skin with water / shower. Remove / Take off all contaminated clothing immediately.

If in EYES: Rinse cautiously with water for at least fifteen (15) minutes. Remove Contact Lenses, if present and easy to do. Continue rinsing.

If EYE irritation persists, get medical advice / attention.

Storage
Store in a secure area.

Disposal
Dispose of contents/containers in accordance with regulations.

* * * Section 3 – COMPOSITION / INFORMATION ON INGREDIENTS * * *

CAS #	Component	Percent
7732-18-5	Water	80
7647-14-5	Sodium Chloride	20

Because brine water is a natural product, composition can vary greatly.

* * * Section 4 – FIRST AID MEASURES * * *

First Aid: Eyes
Flush eyes with clean running water for at least fifteen (15) minutes. If irritation or redness develops from exposure, following flushing, seek medical attention.

First Aid: Skin
First aid is not required, normally. However, it is a good practice to wash any chemical from the skin.

First Aid: Ingestion (Swallowing)
First aid is not required, normally. If spontaneous vomiting occurs, lean the victim forward to reduce the risk of aspiration. Monitor for breathing difficulties. If symptoms develop, seek medical attention.

First Aid: Inhalation (Breathing)
Remove person to fresh air. If person is not breathing, provide artificial respiration. If necessary, provide additional oxygen once breathing is restored if trained to do so. Seek medical attention immediately.

Most important symptoms and effects

None known or anticipated.

* * * Section 5 – FIRE FIGHTING MEASURES * * *

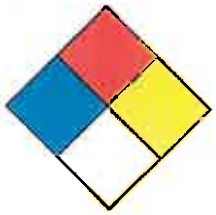

NFPA 704 Hazard Class

Health: 1 Flammability: 0 Instability: 0 (0=Minimal, 1=Slight, 2=Moderate, 3=Serious, 4=Severe)

General Fire Hazards

No fire hazards are expected.

General Fire Hazards

No unusual fire or explosion hazards are expected. If container is not properly cooled, it can rupture in the heat of a fire.

Extinguishing Media

The material is non-flammable. Use extinguishing agent suitable for the type of surrounding fire.

Unsuitable Extinguishing Media

None

Fire Fighting Equipment / Instructions

Small fires in the beginning stage may typically be extinguished using handheld portable fire extinguishers and other firefighting equipment. Isolate area around container involved in fire and keep unauthorized personnel out. Stop spill/release if it can be done safely. Move undamaged containers from the immediate hazard area if it can be done safely. Cool equipment exposed to fire with water, if it can be done safely.

Hazardous Combustion Products

None Anticipated. See Section 9 for Flammable Properties including Flash Point and Flammable (Explosive) Limits

* * * Section 6 – ACCIDENTAL RELEASE MEASURES * * *

Recovery and Neutralization

Contain and stop the source of the spill, if safe to do so.

Materials and Methods for Clean-Up

Notify relevant authorities in accordance with all applicable regulations. Immediate cleanup of any spill is recommended. Dike far ahead of spill for later recovery or disposal. Absorb spill with inert material such as sand or vermiculite, and place in suitable container for disposal. If spilled on water remove with appropriate methods (e.g. skimming, booms or absorbents). In case of soil contamination, remove contaminated soil for remediation or disposal, in accordance with local regulations.

Recommended measures are based on the most likely spillage scenarios of this material. However, local conditions and regulations may influence or limit the choice of appropriate actions to be taken. See Section 13 for information on appropriate disposal.

Emergency Measures

The material is not considered hazardous. Nevertheless, evacuate nonessential personnel and secure the area. Stay upwind and uphill, if possible.

Personal Precautions and Protective Equipment

Stay upwind and away from the spill/release. Avoid direct contact with the material. For large spillages, notify persons downstream of the spill/release. Isolate the immediate hazard area and keep unauthorized personnel out. Response and clean-up crews must be properly trained and must utilize proper protective equipment (see Section 8).

Environmental Precautions

Protect bodies of water by diking or absorbents, if possible. Do not flush down sewer or drainage systems. Use water sparingly to minimize environmental contamination and reduce disposal requirements. If a spill occurs on water, notify appropriate authorities and advise shipping of any hazard.

Prevention of Secondary Hazards

None

* * * Section 7 – HANDLING AND STORAGE * * *

Handling Procedures

Wash thoroughly after handling. Use good personal hygiene practices and wear appropriate personal protective equipment (see section 8).

Do not enter confined spaces such as tanks or pits without following proper entry procedures such as ASTM D-4276 and 29 CFR 1910.146. Do not wear contaminated clothing or shoes.

Storage Procedures

Keep container(s) tightly closed and properly labeled. Use and store this material in cool, dry, well ventilated areas. Store only in approved containers. Keep away from any incompatible material (see Section 10). Protect container(s) against physical damage.

Incompatibilities

Keep away from excessive heat to prevent rupture of container.

* * * Section 8 – EXPOSURE CONTROLS / PERSONAL PROTECTION * * *

Component Exposure Limits

Water (7732-18-5)

ACGIH: Not listed

Sodium Chloride (7647-14-5)

ACGIH: Not listed

Engineering Measures

If current ventilation practices are not adequate to maintain airborne concentrations below the established exposure limits, additional engineering controls may be required.

Personal Protective Equipment: Respiratory

Emergencies or conditions that could result in significant airborne exposures may require the use of NIOSH approved respiratory protection. An industrial hygienist or other appropriate health and safety professional should be consulted for specific guidance under these situations.

A respiratory protection program that meets or is equivalent to OSHA 29 CFR

1910.134 and ANSI Z88.2 should be followed whenever workplace conditions warrant a respirator's use.

Personal Protective Equipment: Skin and Hands

The use of skin protection is not normally required; however, good industrial hygiene practice suggests the use of gloves or other appropriate skin protection whenever working with chemicals.

Personal Protective Equipment: Eyes

Safety glasses or goggles that meet or exceed ANSI Z-87.1 are recommended where there is a possibility of splashing or spraying.

Hygiene Measures

Emergency eye wash capability should be available in the near proximity to operations presenting a potential splash exposure. Use good personal hygiene practices. Avoid repeated and/or prolonged skin exposure. Wash hands before eating, drinking, smoking, or using toilet facilities. Promptly remove contaminated clothing and launder before reuse.

* * * Section 9 – PHYSICAL AND CHEMICAL PROPERTIES * * *

Appearance:	Clear to Brown	**Odor:**	Salty
Physical State:	Liquid	**pH:**	ND
Vapor Pressure:	< 0.36 psia @ 70°F / 21.1°C	**Vapor Density:**	> 1
Boiling Point:	212°F / 100°C	**Melting Point:**	2.4°F / -16.5°C
Solubility (H2O):	Complete	**Specific Gravity:**	1.1 @ 68°F / 20°C
Evaporation Rate:	Variable	**VOC:**	ND
Octanol / H2O Coeff.:	ND	**Flash Point:**	ND
Flash Point Method:	ND		
Lower Flammability Limit: (LFL):	ND	**Upper Flammability Limit: (UFL):**	ND
Auto Ignition:	ND	**Burning Rate:**	ND

* * * Section 10 – CHEMICAL STABILITY & REACTIVITY INFORMATION * * *

Chemical Stability

This is a stable material.

Hazardous Reaction Potential

Will react with alkali and alkaline metals to form flammable hydrogen gas.

Conditions to Avoid

Avoid contact with alkali metals (lithium, sodium, potassium), alkaline metals (beryllium, magnesium, calcium, strontium, and barium), and metallic hydrides like lithium aluminum hydride.

Hazardous Decomposition Products

Not anticipated under normal conditions of use.

Hazardous Polymerization

Not known to occur.

* * * Section 11 – TOXICOLOGICAL INFORMATION * * *

Acute Toxicity

A: General Product Information

Unlikely to be harmful.

B. Component Analysis – D50/LC50

Water (7732-18-5)

Oral LD50 Rat 90 g/kg

Sodium Chloride (7647-14-5)

Oral LD50 Rat 3 g/kg

Potential Health Effects: Skin Corrosion Property / Stimulativeness

May cause skin irritation with prolonged or repeated contact. Not expected to be a skin sensitizer.

Potential Health Effects: Eye Critical Damage / Stimulativeness

Contact with eyes may cause moderate irritation.

Potential Health Effects: Ingestion

Ingestion may result in nausea, vomiting, diarrhea, abdominal cramps, and dehydration (thirst).

Potential Health Effects: Inhalation

No information available on the mixture. However, none of the components have been classified for respiratory sensitization (or are below the concentration threshold for classification).

Generative Cell Mutagenicity

Not expected to cause genetic effects.

Carcinogenicity

General Product Information

Not expected to cause cancer. This substance is not listed as a carcinogen by IARC, NTP or OSHA.

Reproductive Toxicity

This product is not reported to have any reproductive toxicity effects.

Specified Target Organ General Toxicity: Single Exposure

This product is not reported to have any specific target organ general toxicity single exposure effects.

Specified Target Organ General Toxicity: Repeated Exposure

This product is not reported to have any specific target organ general toxicity multiple exposure effects.

Aspiration Respiratory Organs Hazard

The major health threat of ingestion occurs from the danger of aspiration (breathing) of liquid drops into the lungs, particularly from vomiting. Aspiration may result in chemical pneumonia (fluid in the lungs), severe lung damage, respiratory failure and even death.

* * * Section 12 – ECOLOGICAL INFORMATION * * *

Ecotoxicity

A: General Product Information

Keep out of sewers, drainage areas, and waterways. Report spills and releases, as applicable under Federal and State regulations.

Persistence / Degradability

No information available

Bioaccumulation

No information available

Mobility in Soil

No information available

* * * Section 13 – DISPOSAL CONSIDERATIONS * * *

Waste Disposal Instructions

See Section 7 for Handling Procedures. See Section 8 for Personal Protective Equipment Recommendations.

Disposal of Contaminated Containers or Packaging

Recover or recycle if possible. It is the responsibility of the generator to determine the toxicity and physical properties of the material generated so as to properly classify the waste and ensure disposal methods comply with applicable regulations.

This material, if discarded as produced, is not a RCRA "listed" hazardous waste, and is not believed to exhibit characteristics of hazardous waste. Consult state and local regulations regarding the proper disposal of this material. Do not dispose of brine water by draining onto the ground. This will result in soil and groundwater contamination. Waste arising from spillage or tank cleaning should be disposed of in accordance with applicable regulations.

Container contents should be completely used and containers should be emptied prior to discard. Container rinsate should not be considered a RCRA hazardous waste but must be disposed of with care and in full compliance with federal, state and local regulations. Larger empty containers, such as drums, should be returned to the distributor or to a qualified drum reconditioner. To assure proper disposal of smaller empty containers, consult with state and local regulations and disposal authorities.

* * * Section 14 – TRANSPORTATION INFORMATION * * *

DOT Information

Shipping Description: Not Regulated

UN #: Not Regulated

* * * Section 15 – REGULATORY INFORMATION * * *

CERCLA/SARA – Section 302 Extremely Hazardous Substances and TPQs (in pounds):
This material does not contain any chemicals subject to the reporting requirements of SARA 302 and 40 CFR 372,

CERCLA/SARA – Section 313 and 40 CFR 372):
This material does not contain any chemicals subject to the reporting requirements of SARA 313 and 40 CFR 372.

EPA (CERCLA) Reportable Quantity (in pounds):
This material does not contain any chemicals with CERCLA Reportable Quantities.

State Regulations

Component Analysis

The following components appear on one or more of the following state hazardous substances list.

California Proposition 65:
This material does not contain any chemicals that are known to the State of California to cause cancer, birth defects or other reproductive harm at concentrations that trigger the warning requirements of California Proposition 65.

National Chemical Inventories:
All components are either listed on the US TSCA Inventory, or are not regulated under TSCA.

U.S. Export control classification Number: EAR99.

* * * Section 16 – OTHER INFORMATION * * *

NFPA® Hazard Rating

Health	1
Fire	0
Reactivity	0

HMIS® Hazard Rating

Health	1	Slight
Fire	0	Minimal
Physical	0	Minimal

Key/Legend

EPA = Environmental Protection Agency; TSCA = Toxic Substance Control Act: ACGIH = American Conference of Governmental Industrial Hygienists; IARC = International Agency for Research on Cancer; NIOSH = National Institute for Occupational Safety and Health; NTP = National Toxicology Program; OSHA = Occupational Safety and Health Administration; NJTSR = New Jersey Trade Secret Registry.

Literature References

None

Other Information

The information presented herein has been compiled from sources considered to be dependable, and is accurate and reliable to the best of our knowledge and belief, but is not guaranteed to be so. Since conditions of use are beyond our control, we make no warranties, expressed or implied, except those that may be contained in our written contract of sale or acknowledgment.

Vendor assumes no responsibility for injury to vendee or third persons proximately caused by the material if reasonable safety procedures are not adhered to as stipulated in the data sheet. Additionally, vendor assumes no responsibility for injury to vendee or third persons proximately caused by abnormal use of the material, even if reasonable safety procedures are followed. Furthermore, vendee assumes the risk in their use of the material.

Date of Preparation: January 28, 2014

Date of Last Revision: March 4, 2014

End of Sheet

November 6, 2014

FESCO, Ltd.
1100 FESCO Avenue - Alice, Texas 78332

For: Antero Resources Appalachian Corp.
1615 Wynkoop Street
Denver, Colorado 80202

Sample: McCabe No. 3H
First Stage Separator Hydrocarbon Liquid
Sampled @ 128 psig & 85 °F

Date Sampled: 10/14/14 Job Number: 45833.002

CHROMATOGRAPH EXTENDED ANALYSIS - GPA 2186-M

COMPONENT	MOL %	LIQ VOL %	WT %
Nitrogen	0.000	0.000	0.000
Carbon Dioxide	0.012	0.004	0.004
Methane	3.547	1.130	0.456
Ethane	3.841	1.931	0.926
Propane	4.238	2.195	1.498
Isobutane	1.313	0.808	0.612
n-Butane	3.695	2.190	1.721
2,2 Dimethylpropane	0.101	0.073	0.059
Isopentane	2.640	1.815	1.526
n-Pentane	3.431	2.338	1.984
2,2 Dimethylbutane	0.145	0.113	0.100
Cyclopentane	0.000	0.000	0.000
2,3 Dimethylbutane	0.288	0.222	0.199
2 Methylpentane	2.013	1.570	1.390
3 Methylpentane	1.310	1.005	0.905
n-Hexane	3.511	2.715	2.425
Heptanes Plus	69.916	81.891	86.195
Totals:	100.000	100.000	100.000

Characteristics of Heptanes Plus:

Specific Gravity	0.7823	(Water=1)
°API Gravity	49.37	@ 60°F
Molecular Weight	153.8	
Vapor Volume	16.14	CF/Gal
Weight	6.52	Lbs/Gal

Characteristics of Total Sample:

Specific Gravity	0.7433	(Water=1)
°API Gravity	58.88	@ 60°F
Molecular Weight	124.8	
Vapor Volume	18.91	CF/Gal
Weight	6.19	Lbs/Gal

Base Conditions: 14.850 PSI & 60 °F

Certified: FESCO, Ltd. - Alice, Texas

Analyst: XG
Processor: XGdjv
Cylinder ID: T-669

David Dannhaus 361-661-7015

FESCO, Ltd Job Number: 45833.002

TANKS DATA INPUT REPORT - GPA 2186-M

COMPONENT	Mol %	LiqVol %	Wt %
Carbon Dioxide	0.012	0.004	0.004
Nitrogen	0.000	0.000	0.000
Methane	3.547	1.130	0.456
Ethane	3.841	1.931	0.926
Propane	4.238	2.195	1.498
Isobutane	1.313	0.808	0.612
n-Butane	3.796	2.263	1.780
Isopentane	2.640	1.815	1.526
n-Pentane	3.431	2.338	1.984
Other C-6's	3.755	2.911	2.594
Heptanes	10.405	8.624	8.125
Octanes	14.909	13.145	12.948
Nonanes	7.110	7.292	7.237
Decanes Plus	33.958	50.383	55.006
Benzene	0.168	0.088	0.105
Toluene	0.804	0.506	0.593
E-Benzene	0.623	0.452	0.530
Xylenes	1.939	1.400	1.650
n-Hexane	3.511	2.715	2.425
2,2,4 Trimethylpentane	0.000	0.000	0.000
Totals:	100.000	100.000	100.000

Characteristics of Total Sample:

Specific Gravity	0.7433	(Water=1)
°API Gravity	58.88	@ 60°F
Molecular Weight	124.8	
Vapor Volume	18.91	CF/Gal
Weight	6.19	Lbs/Gal

Characteristics of Decanes (C10) Plus:

Specific Gravity	0.8115	(Water=1)
Molecular Weight	202.1	

Characteristics of Atmospheric Sample:

°API Gravity	54.93	@ 60°F
Reid Vapor Pressure (ASTM D-5191)	5.08	psi

QUALITY CONTROL CHECK			
	Sampling Conditions	Test Samples	
Cylinder Number	------	T-669*	W-1610
Pressure, PSIG	128	119	116
Temperature, °F	85	70	70

* Sample used for analysis

FESCO, Ltd. Job Number: 45833.002

TOTAL EXTENDED REPORT - GPA 2186-M

COMPONENT	Mol %	LiqVol %	Wt %
Nitrogen	0.000	0.000	0.000
Carbon Dioxide	0.012	0.004	0.004
Methane	3.547	1.130	0.456
Ethane	3.841	1.931	0.926
Propane	4.238	2.195	1.498
Isobutane	1.313	0.808	0.612
n-Butane	3.695	2.190	1.721
2,2 Dimethylpropane	0.101	0.073	0.059
Isopentane	2.640	1.815	1.526
n-Pentane	3.431	2.338	1.984
2,2 Dimethylbutane	0.145	0.113	0.100
Cyclopentane	0.000	0.000	0.000
2,3 Dimethylbutane	0.288	0.222	0.199
2 Methylpentane	2.013	1.570	1.390
3 Methylpentane	1.310	1.005	0.905
n-Hexane	3.511	2.715	2.425
Methylcyclopentane	0.825	0.549	0.556
Benzene	0.168	0.088	0.105
Cyclohexane	0.905	0.579	0.611
2-Methylhexane	2.071	1.810	1.664
3-Methylhexane	1.742	1.503	1.399
2,2,4 Trimethylpentane	0.000	0.000	0.000
Other C-7's	1.128	0.944	0.897
n-Heptane	3.734	3.239	2.999
Methylcyclohexane	3.479	2.629	2.738
Toluene	0.804	0.506	0.593
Other C-8's	7.935	7.149	7.009
n-Octane	3.496	3.367	3.200
E-Benzene	0.623	0.452	0.530
M & P Xylenes	0.957	0.698	0.814
O-Xylene	0.982	0.702	0.836
Other C-9's	4.453	4.482	4.506
n-Nonane	2.656	2.810	2.731
Other C-10's	4.949	5.473	5.604
n-decane	1.941	2.240	2.214
Undecanes(11)	5.280	5.991	6.221
Dodecanes(12)	3.844	4.712	4.961
Tridecanes(13)	3.183	4.183	4.464
Tetradecanes(14)	2.508	3.531	3.820
Pentadecanes(15)	1.982	2.989	3.273
Hexadecanes(16)	1.524	2.456	2.712
Heptadecanes(17)	1.262	2.151	2.398
Octadecanes(18)	1.188	2.132	2.391
Nonadecanes(19)	1.021	1.908	2.152
Eicosanes(20)	0.783	1.522	1.727
Heneicosanes(21)	0.670	1.371	1.564
Docosanes(22)	0.606	1.291	1.482
Tricosanes(23)	0.452	0.998	1.152
Tetracosanes(24)	0.434	0.993	1.151
Pentacosanes(25)	0.326	0.775	0.903
Hexacosanes(26)	0.337	0.829	0.970
Heptacosanes(27)	0.260	0.663	0.779
Octacosanes(28)	0.204	0.539	0.635
Nonacosanes(29)	0.202	0.549	0.650
Triacontanes(30)	0.175	0.492	0.584
Hentriacontanes Plus(31+)	0.823	2.594	3.201
Total	100.000	100.000	100.000

November 6, 2014

FESCO, Ltd.
1100 Fesco Avenue - Alice, Texas 78332

For: Antero Resources Appalachian Corp.
1615 Wynkoop Street
Denver, Colorado 80202

Date Sampled: 10/14/14

Date Analyzed: 10/24/14

Sample: McCabe No. 3H

Job Number: J45833

FLASH LIBERATION OF HYDROCARBON LIQUID		
	First Stage Separator HC Liquid	Stock Tank
Pressure, psig	128	0
Temperature, °F	85	70
Gas Oil Ratio (1)	-----	81.9
Gas Specific Gravity (2)	-----	1.202
Separator Volume Factor (3)	1.0523	1.000

STOCK TANK FLUID PROPERTIES	
Shrinkage Recovery Factor (4)	0.9503
Oil API Gravity at 60 °F	54.93
Reid Vapor Pressure, psi (5)	5.08

Quality Control Check			
	Sampling Conditions	Test Samples	
Cylinder No.	-----	T-669*	W-1610
Pressure, psig	128	119	116
Temperature, °F	85	70	70

(1) - Scf of flashed vapor per barrel of stock tank oil
(2) - Air = 1.000
(3) - Separator volume / Stock tank volume
(4) - Fraction of first stage separator liquid
(5) - Absolute pressure at 100 deg F
Analyst: T. G.
* Sample used for flash study
Base Conditions: 14.85 PSI & 60 °F

Certified: FESCO, Ltd. - Alice, Texas

David Dannhaus 361-661-7015

October 29, 2014

FESCO, Ltd.
1100 Fesco Ave. - Alice, Texas 78332

For: Antero Resources Appalachian Corp.
1615 Wynkoop Street
Denver, Colorado 80202

Sample: McCabe No. 3H
Gas Evolved from Hydrocarbon Liquid Flashed
From 128 psig & 85 °F to 0 psig & 70 °F

Date Sampled: 10/14/14 Job Number: 45833.001

CHROMATOGRAPH EXTENDED ANALYSIS - GPA 2286

COMPONENT	MOL%	GPM
Hydrogen Sulfide*	< 0.001	
Nitrogen	0.065	
Carbon Dioxide	0.136	
Methane	34.212	
Ethane	29.270	7.890
Propane	19.137	5.314
Isobutane	3.361	1.109
n-Butane	6.800	2.161
2-2 Dimethylpropane	0.054	0.021
Isopentane	2.017	0.743
n-Pentane	1.824	0.666
Hexanes	1.697	0.705
Heptanes Plus	1.427	0.625
Totals	100.000	19.233

Computed Real Characteristics Of Heptanes Plus:

Specific Gravity	3.528	(Air=1)
Molecular Weight	101.04	
Gross Heating Value	5387	BTU/CF

Computed Real Characteristics Of Total Sample:

Specific Gravity	1.202	(Air=1)
Compressibility (Z)	0.9889	
Molecular Weight	34.43	
Gross Heating Value		
Dry Basis	2032	BTU/CF
Saturated Basis	1998	BTU/CF

*Hydrogen Sulfide tested in laboratory by: Stain Tube Method (GPA 2377)
Results: 0.126 Gr/100 CF, 2.0 PPMV or 0.0002 Mol %

Base Conditions: 14.850 PSI & 60 Deg F

Certified: FESCO, Ltd. - Alice, Texas

Analyst: MR
Processor: IM
Cylinder ID: 12S

David Dannhaus 361-661-7015

CHROMATOGRAPH EXTENDED ANALYSIS - GPA 2286
TOTAL REPORT

COMPONENT	MOL %	GPM	WT %
Hydrogen Sulfide*	< 0.001		< 0.001
Nitrogen	0.065		0.053
Carbon Dioxide	0.136		0.174
Methane	34.212		15.942
Ethane	29.270	7.890	25.565
Propane	19.137	5.314	24.512
Isobutane	3.361	1.109	5.674
n-Butane	6.800	2.161	11.480
2,2 Dimethylpropane	0.054	0.021	0.113
Isopentane	2.017	0.743	4.227
n-Pentane	1.824	0.666	3.823
2,2 Dimethylbutane	0.061	0.026	0.153
Cyclopentane	0.000	0.000	0.000
2,3 Dimethylbutane	0.119	0.049	0.298
2 Methylpentane	0.529	0.221	1.324
3 Methylpentane	0.314	0.129	0.786
n-Hexane	0.674	0.279	1.687
Methylcyclopentane	0.091	0.032	0.222
Benzene	0.027	0.008	0.061
Cyclohexane	0.101	0.035	0.247
2-Methylhexane	0.138	0.065	0.402
3-Methylhexane	0.130	0.060	0.378
2,2,4 Trimethylpentane	0.000	0.000	0.000
Other C7's	0.154	0.068	0.444
n-Heptane	0.206	0.096	0.600
Methylcyclohexane	0.181	0.073	0.516
Toluene	0.035	0.012	0.094
Other C8's	0.194	0.091	0.621
n-Octane	0.060	0.031	0.199
Ethylbenzene	0.002	0.001	0.006
M & P Xylenes	0.014	0.005	0.043
O-Xylene	0.002	0.001	0.006
Other C9's	0.055	0.028	0.202
n-Nonane	0.014	0.008	0.052
Other C10's	0.016	0.009	0.066
n-Decane	0.004	0.002	0.017
Undecanes (11)	0.003	0.002	0.013
Totals	100.000	19.233	100.000

Computed Real Characteristics Of Total Sample:

Specific Gravity	1.202	(Air=1)
Compressibility (Z)	0.9889	
Molecular Weight	34.43	
Gross Heating Value		
Dry Basis	2032	BTU/CF
Saturated Basis	1998	BTU/CF

Antero Resources
Prunty Unit 1H - Lockhart Heirs Pad

Tag Name	Value	Units	Timestamp
Accumulated Gas Flow	560999.8	MCF	10/16/2013 16:11:13
Casing Pressure	450.96	PSIA	10/16/2013 17:05:05
Current Day Gas Flow	2287.78	MCF	10/16/2013 16:11:13
Differential Pressure	57.03	inH2O	10/16/2013 16:11:13
Flow Rate	7454.35	MCF Per Day	10/16/2013 16:11:13
Pressure	108.81	PSIA	10/16/2013 16:11:13
Previous Day Energy	9462.83	MBTU	10/16/2013 16:11:15
Previous Day Gas Flow	7588.11	MCF	10/16/2013 16:11:15
Temperature	60.11	F	10/16/2013 16:11:13
Tubing Pressure	748.58	PSIA	10/16/2013 17:05:05
Daily AP	63.93	PSIA	10/16/2013 09:00:00
Daily DP	111.06	inH2O	10/16/2013 09:00:00
Daily Energy	9462.83	MBTU	10/16/2013 09:00:00
Daily Flow	7588.11	MCF	10/16/2013 09:00:00
Daily Tf	59.56	F	10/16/2013 09:00:00
Hourly AP	110.1	PSIA	10/16/2013 10:00:00
Hourly DP	61.64	Inches	10/16/2013 10:00:00
Hourly Energy	399.7	MBTU	10/16/2013 10:00:00
Hourly Flow Time	3600	Seconds	10/16/2013 10:00:00
Hourly Tf	61.1	F	10/16/2013 10:00:00
Hourly Volume	320.5	MCF	10/16/2013 10:00:00
Audited Accumulated Gas Volume		MCF	
Audited Casing Pressure		PSI	
Audited Gas Volume		MCF	
Audited Oil Volume		Barrels	
Audited Tubing Pressure		PSI	
Audited Water Volume		Barrels	
Argon	0	%	10/16/2013 16:11:25
BTU	1247.06	BTU	10/16/2013 16:11:13
C02	0.1467	%	10/16/2013 16:11:25
Carbon Monoxide	0	%	10/16/2013 16:11:25
Decane	0	%	10/16/2013 16:11:25
Ethane	14.1987	%	10/16/2013 16:11:25
Helium	0	%	10/16/2013 16:11:25
Heptane	0	%	10/16/2013 16:11:25
Hexane	0.5451	%	10/16/2013 16:11:25
Hydrogen	0	%	10/16/2013 16:11:25
Hydrogen Sulfide	0	%	10/16/2013 16:11:25
Iso-Butane	0.5666	%	10/16/2013 16:11:25
Iso-Pentane	0.3749	%	10/16/2013 16:11:25
Methane	77.6927	%	10/16/2013 16:11:25
N2	0.4946	%	10/16/2013 16:11:25
N-Butane	1.1838	%	10/16/2013 16:11:25
Nonane	0	%	10/16/2013 16:11:25
N-Pentane	0.2914	%	10/16/2013 16:11:25
Octane	0	%	10/16/2013 16:11:25
Oxygen	0.0117	%	10/16/2013 16:11:25
Plate Size	3.75	Inches	10/16/2013 16:11:20
Propane	4.4938	%	10/16/2013 16:11:25
SPG	0.7248		10/16/2013 16:11:13
Water	0	%	10/16/2013 16:11:25

Attachment O

Emissions Summary Sheet

Attachment O: G70-A Emissions Summary Sheet

Emission Points Data Summary Sheet

Table 1: Emissions Data

Emission Point ID No. (Must match Emission Units Table & Plot Plan)	Emission Point Type1	Emission Unit Vented Through This Point (Must match Emission Units Table & Plot Plan)		Air Pollution Control Device (Must match Emission Units Table & Plot Plan)		All Regulated Pollutants - Chemical Name/CAS3 (Speciate VOCs & HAPS)	Maximum Potential Uncontrolled Emissions 4		Maximum Potential Controlled Emissions 5		Emission Form or Phase (At exit conditions, Solid, Liquid or Gas/Vapor)	Est. Method Used 6
		ID No.	Source	ID No.	Device Type		lb/hr	ton/yr	lb/hr	ton/yr		
EP-H001, EP-H002, EP-H003, EP-H004, EP-H005, EP-H006, EP-H007, EP-H008, EP-H009, EP-H010	Vertical Stack	H001, H002, H003, H004, H005, H006, H007, H008, H009, H010	Gas Production Unit Heater	N/A		CO (630080)	1.0104	4.4254	1.0104	4.4254	Gas/Vapor /Solid (for PM)	MB AP-42
						NOx (10102439)	1.2028	5.2684	1.2028	5.2684		
						Pb (7439-92-1)	6.01E-06	2.63E-05	6.01E-06	2.63E-05		
						CO2 Equivalent N2O (10024972), CO2 (124389), CH4 (74828)	1451.9722	6359.6384	1451.9722	6359.6384		
						SO2 (7446095)	0.0072	0.0316	0.0072	0.0316		
						PM, PM10, PM2.5	0.0914	0.4004	0.0914	0.4004		
						Benzene (71432)	2.53E-05	0.0001	2.53E-05	0.0001		
						Toluene (108883)	4.09E-05	0.0002	4.09E-05	0.0002		
						Hexane (110543)	0.0217	0.0948	0.0217	0.0948		
						Formaldehyde (50000)	0.0009	0.0040	0.0009	0.0040		
						2-Methylnaphthalene (91576)	2.89E-07	1.26E-06	2.89E-07	1.26E-06		
						Dichlorobenzene (95501)	1.44E-05	6.32E-05	1.44E-05	6.32E-05		
						Fluoranthene (206440)	3.61E-08	1.58E-07	3.61E-08	1.58E-07		
						Fluorene (86737)	3.37E-08	1.48E-07	3.37E-08	1.48E-07		
						Naphthalene (91203)	7.34E-06	3.21E-05	7.34E-06	3.21E-05		
						Phenanathrene (85018)	2.04E-07	8.96E-07	2.04E-07	8.96E-07		
						Total VOCs	0.0662	0.2898	0.0662	0.2898		
F001	n/a	F001	Fugitives	N/A		Benzene (71432)	0.0035	0.0151	0.0035	0.0151	Gas/Vapor	MB
						Toluene (108883)	0.0195	0.0854	0.0195	0.0854		
						Ethyl benzene (100414)	0.0174	0.0762	0.0174	0.0762		
						Hexane (110543)	0.2005	0.8780	0.2005	0.8780		
						o,m,p-xylenes (95476,108383,106423)	0.0542	0.2372	0.0542	0.2372		
						CO2 Equivalent CO2 (124389)), CH4	80.5348	352.7425	80.5348	352.7425		
						VOCs	3.8308	16.7790	3.8308	16.7790		
						TAPs (benzene)	0.0035	0.0151	0.0035	0.0151		
EP-L001, EP-L002	n/a	L001, L002	Loading (Condensate), Loading (Water)	N/A		VOCs	13.8941	5.2896	13.8941	5.2896	Gas/Vapor	MB
						toluene (108883)	0.0030	0.0012	0.0030	0.0012		
						ethyl benzene (100414)	0.0017	0.0007	0.0017	0.0007		
						hexane (110543)	0.0263	0.0100	0.0263	0.0100		
						o,m,p-xylenes (95476,108383,106423)	0.0051	0.0019	0.0051	0.0019		
						CO2 Equivalent CO2 (124389), CH4	18.4985	11.0207	18.4985	11.0207		
						benzene (71432)	0.0009	0.0003	0.0009	0.0003		
						TAPs (benzene)	0.0009	0.0003	0.0009	0.0003		
EP-HR001	n/a	HR001	Haul Truck	N/A		PM, PM10, PM2.5	7.8710	23.1269	3.9355	11.5635	Solid	MB

Attachment O: G70-A Emissions Summary Sheet

Emission Points Data Summary Sheet

Table 1: Emissions Data

Emission Point ID No. (Must match Emission Units Table & Plot Plan)	Emission Point Type[1]	Emission Unit Vented Through This Point (Must match Emission Units Table & Plot Plan)		Air Pollution Control Device (Must match Emission Units Table & Plot Plan)		All Regulated Pollutants - Chemical Name/CAS[3] (Speciate VOCs & HAPS)	Maximum Potential Uncontrolled Emissions [4]		Maximum Potential Controlled Emissions [5]		Emission Form or Phase (At exit conditions, Solid, Liquid or Gas/Vapor)	Est. Method Used [6]
		ID No.	Source	ID No.	Device Type		lb/hr	ton/yr	lb/hr	ton/yr		
FL001	n/a	TANKCOND001-010, TANKPW001-002, and FL001	Condensate Tanks, PW Tanks, and Flare	N/A	Flare	CO (630080)	0.00E+00	0.00E+00	0.1853	0.8118	Gas/Vapor/ Solid (for PM)	MB
						NOx (10102439)	0.00E+00	0.00E+00	0.2206	0.9664		
						Pb (7439-92-1)	0.00E+00	0.00E+00	1.10E-06	4.83E-06		
						CO2 Equivalent N2O (10024972), CO2 (124389), CH4	887.0525	3885.2898	694.0757	3040.0517		
						SO2 (7446095)	0.00E+00	0.00E+00	7.56E-06	3.31E-05		
						PM, PM10, PM2.5	0.00E+00	0.00E+00	0.0168	0.0734		
						Benzene (71432)	0.1495	0.6549	0.0030	0.0131		
						Toluene (108883)	0.2425	1.0623	0.0049	0.0212		
						ethyl benzene (100414)	0.0735	0.3218	0.0015	0.0064		
						hexane (110543)	3.3017	14.4614	0.0660	0.2892		
						o,m,p-xylenes (95476,108383,106423)	0.1815	0.7952	0.0036	0.0159		
						Formaldehyde (50000)	0.00E+00	0.00E+00	9.45E-07	4.14E-06		
						VOCs	123.1844	539.5479	2.4638	10.7913		
EP-PCV	valve	PCV	Pneumatic CV	N/A		toluene (108883)	0.00E+00	0.00E+00	0.00E+00	0.00E+00	Gas/Vapor	MB
						ethyl benzene (100414)	0.00E+00	0.00E+00	0.00E+00	0.00E+00		
						hexane (110543)	0.0136	0.0596	0.0136	0.0596		
						o,m,p-xylenes (95476,108383,106423)	0.00E+00	0.00E+00	0.00E+00	0.00E+00		
						CO2 Equivalent CO2 (124389)), CH4	9.0327	39.5633	9.0327	39.5633		
						VOCs	0.1145	0.5015	0.1145	0.5015		
						TAPs (benzene)	0.00E+00	0.00E+00	0.00E+00	0.00E+00		
EP-ENG001	Vertical Stack	ENG001	Compressor Engine	N/A		CO (630080)	5.6445	24.7228	5.6445	24.7228	Gas/Vapor/ Solid (for PM)	MB
						NOx (10102439)	0.3158	1.3831	0.3158	1.3831		
						CO2 Equivalent N2O (10024972), CO2 (124389), CH4 (74828)	27.7765	121.6612	27.7765	121.6612		
						SO2 (7446095)	0.0001	0.0006	0.0001	0.0006		
						PM, PM10, PM2.5	0.0023	0.0100	0.0023	0.0100		
						TAPs Benzene (71432)	0.0004	0.0017	0.0004	0.0017		
						Toluene (108883)	0.0001	0.0006	0.0001	0.0006		
						TAPs Formaldehyde (50000)	0.0049	0.0215	0.0049	0.0215		
						Ethyl Benzene (100414)	0.0000	0.0000	0.0000	0.0000		
						Naphthalene (91203)	0.0000	0.0001	0.0000	0.0001		
						o,m,p-xylenes (95476,108383,106423)	0.0000	0.0002	0.0000	0.0002		
						Total VOCs	0.0071	0.0311	0.0071	0.0311		

Attachment C/O: G70-A Emissions Summary Sheet

Fugitive Emissions Data Summary Sheet

FUGITIVE EMISSIONS SUMMARY	All Regulated Pollutants Chemical Name/CAS [1]	Maximum Potential Uncontrolled Emissions [2]		Maximum Potential Controlled Emissions [3]		Est. Method Used [4]
		lb/hr	ton/yr	lb/hr	ton/yr	
Haul Road/Road Dust Emissions Paved Haul Roads	n/a					
Unpaved Haul Roads	PM, PM10, PM2.5	7.8710	23.1269	3.9355	11.5635	MB
Loading/Unloading Operations	VOCs	13.8941	5.2896	13.8941	5.2896	MB
	toluene (108883)	0.0030	0.0012	0.0030	0.0012	
	ethyl benzene (100414)	0.0017	0.0007	0.0017	0.0007	
	hexane (110543)	0.0263	0.0100	0.0263	0.0100	
	o,m,p-xylenes (95476,108383,106423)	0.0051	0.0019	0.0051	0.0019	
	CO2 Equivalent CO2 (124389), CH4	18.4985	11.0207	18.4985	11.0207	
	benzene (71432)	0.0009	0.0003	0.0009	0.0003	
	TAPs (benzene)	0.0009	0.0003	0.0009	0.0003	
Equipment Leaks (Components)	Benzene (71432)	Does not apply	0.0151	Does not apply	0.0151	MB
	Toluene (108883)		0.0854		0.0854	
	Ethyl benzene (100414)		0.0762		0.0762	
	Hexane (110543)		0.8780		0.8780	
	o,m,p-xylenes (95476,108383,106423)		0.2372		0.2372	
	CO2 Equivalent CO2 (124389)), CH4		352.7425		352.7425	
	VOCs		16.7790		16.7790	
	TAPs (benzene)		0.0151		0.0151	
Equipment Leaks (PCVs)	toluene (108883)	0.00E+00	0.00E+00	0.00E+00	0.00E+00	MB
	ethyl benzene (100414)	0.00E+00	0.00E+00	0.00E+00	0.00E+00	
	hexane (110543)	0.0136	0.0596	0.0136	0.0596	
	o,m,p-xylenes (95476,108383,106423)	0.00E+00	0.00E+00	0.00E+00	0.00E+00	
	CO2 Equivalent CO2 (124389)), CH4	9.0327	39.5633	9.0327	39.5633	
	VOCs	0.1145	0.5015	0.1145	0.5015	
	TAPs (benzene)	0.00E+00	0.00E+00	0.00E+00	0.00E+00	

[1] List all regulated air pollutants. Speciate VOCs, including all HAPs. Follow chemical name with Chemical Abstracts Service (CAS) number. LIST Acids, CO, CS_2, VOCs, H_2S, Inorganics, Lead, Organics, O_3, NO, NO_2, SO_2, SO_3, all applicable Greenhouse Gases (including CO_2 and methane), etc. DO NOT LIST H_2, H_2O, N_2, O_2, and Noble Gases.

[2] Give rate with no control equipment operating. If emissions occur for less than 1 hr, then record emissions per batch in minutes (e.g. 5 lb VOC/20 minute batch).

[3] Give rate with proposed control equipment operating. If emissions occur for less than 1 hr, then record emissions per batch in minutes (e.g. 5 lb VOC/20 minute batch).

[4] Indicate method used to determine emission rate as follows: MB = material balance; ST = stack test (give date of test); EE = engineering estimate; O = other (specify).

Attachment P

Other Supporting Documentation
(Engine EPA's Certificate of Conformity and Technical Information)

UNITED STATES ENVIRONMENTAL PROTECTION AGENCY
2013 MODEL YEAR
CERTIFICATE OF CONFORMITY
WITH THE CLEAN AIR ACT OF 1990

OFFICE OF TRANSPORTATION AND AIR QUALITY
ANN ARBOR, MICHIGAN 48105

Certificate Issued To: **Kubota Corporation**
(U.S. Manufacturer or Importer)

Certificate Number: **DKBXS.9622HP-002**

Effective Date: 11/20/2012

Expiration Date: 12/31/2013

Byron J. Bunker, Division Director
Compliance Division

Issue Date: 11/20/2012

Revision Date: N/A

Manufacturer: Kubota Corporation
Engine Family: DKBXS.9622HP
Certificate Number: DKBXS.9622HP-002
Useful Life : 1000 Hours / 5 Years
Engine Class : Nonhandheld-Class II
Fuel : Natural Gas (CNG/LNG)
Emission Standards : NMHC + NOx (g/kW-hr) : 8
CO (g/kW-hr) : 610

Pursuant to Section 213 of the Clean Air Act (42 U.S.C. section 7547), 40 CFR Part 1054, 40 CFR Part 1068 and 40 CFR Part 60 (stationary only and combined stationary and mobile), and subject to the terms and conditions prescribed in those provisions, this certificate of conformity is hereby issued for the following small nonroad engine family, more fully described in the documentation required by 40 CFR Part 1054 and produced in the stated model year.

This certificate of conformity covers only those new small nonroad engines which conform in all material respects to the design specifications that applied to those engines described in the documentation required by 40 CFR Part 1054 and which are produced during the model year stated on this certificate of the said manufacturer, as defined in 40 CFR Part 1054. This certificate of conformity does not cover small nonroad engines imported prior to the effective date of the certificate.

It is a term of this certificate that the manufacturer shall consent to all inspections described in 40 CFR 1068.20 and 1068, Subpart E and authorized in a warrant or court order. Failure to comply with the requirements of such a warrant or court order may lead to revocation or suspension of this certificate for reasons specified in 40 CFR Part 1054. It is also a term of this certificate that this certificate may be revoked or suspended or rendered void *ab initio* for other reasons specified in 40 CFR Part 1054, 40 CFR Part 1068.

This certificate does not cover small nonroad engines sold, offered for sale, or introduced, or delivered for introduction, into commerce in the U.S. prior to the effective date of the certificate.

TECHNICAL INFORMATION

DG972-SAEH-S1

NATURAL GAS FUEL ENGINE

July, 2006

KUBOTA Corporation

CONTENTS

1. GENERAL SPECIFICATIONS

2. PERFORMANCE CURVES

3. DIMENSIONS

4. TECHNICAL DATA

4-1) BRAKE HORSE POWER

4-2) FUEL CONSUMPTION

4-3) NOISE LEVEL

4-4) AIR REQUIREMENTS

1. Combustion air requirements
2. Cooling air requirements
3. Combustion and cooling air requirements

4-5) EXHAUST GAS VOLUME

4-6) HEAT REJECTION TO COOLING WATER (Ho)

4-7) COOLING FAN DATA

4-8) CENTER OF GRAVITY

4-9) UNBALANCED FORCES OF ENGINES

4-10) MASS ELASTIC SYSTEM

5. FUEL SYSTEM AND FUEL DIAGRAM

Specifications and dimensions are subject to change without prior notice.

1. GENERAL SPECIFICATIONS

ITEM	UNIT	SPECIFICATIONS
Engine model		DG972-SAEH-S1
Type		Vertical, In line, 4cycle Natural Gas engine
Cooling system		Water cooling with water pump
Number of cylinders		3
Cylinder bore	mm(in)	74.5 (2.93)
Stroke	mm(in)	73.6 (2.90)
Total displacement	L(cu. in)	0.962 (58.7)
High idle	rpm	3850
Low idle	rpm	1500
Horsepower	kW(HP)	19.5(26.1)
Max. torque (SAE J1349)	Nm(ft-lb) /rpm	61.2 (45.2)/2400
Compression ratio		9.2
Firing order		1-2-3
Ignition timing		B.T.D.C.15° /1000rpm B.T.D.C.28° /3600rpm
Ignition system		Distributor-less Solid State type
Fuel		Natural Gas only
Direction of rotation		Counter-clockwise from flywheel side
Starting system		Electric starting with cell starter
Starter output	V-kW	12-1.0
Alternator output	V-W	12-480 (Standard)
Lubricating system		Forced lubricating by trochoid pump
Lubricating oil		Quality better than SH class
Lube. oil capacity	L(US gal)	3.4 (0.90)
Coolant capacity	L(US gal)	1.22 (0.32)
Governor type		Centrifugal flyweight mechanical type governor
Dimensions (LxBxH)	mm(in)	526x415x503 (20.7x16.3x19.8)
Dry weight	kg(lb)	Approx. 95.4(210)
Application		Stationary only

2. PERFORMANCE CURVES

DG972 PERFORMANCE CURVES

Higher calorific value : 11000kcal/m^3 (1236BTU/ft^3)

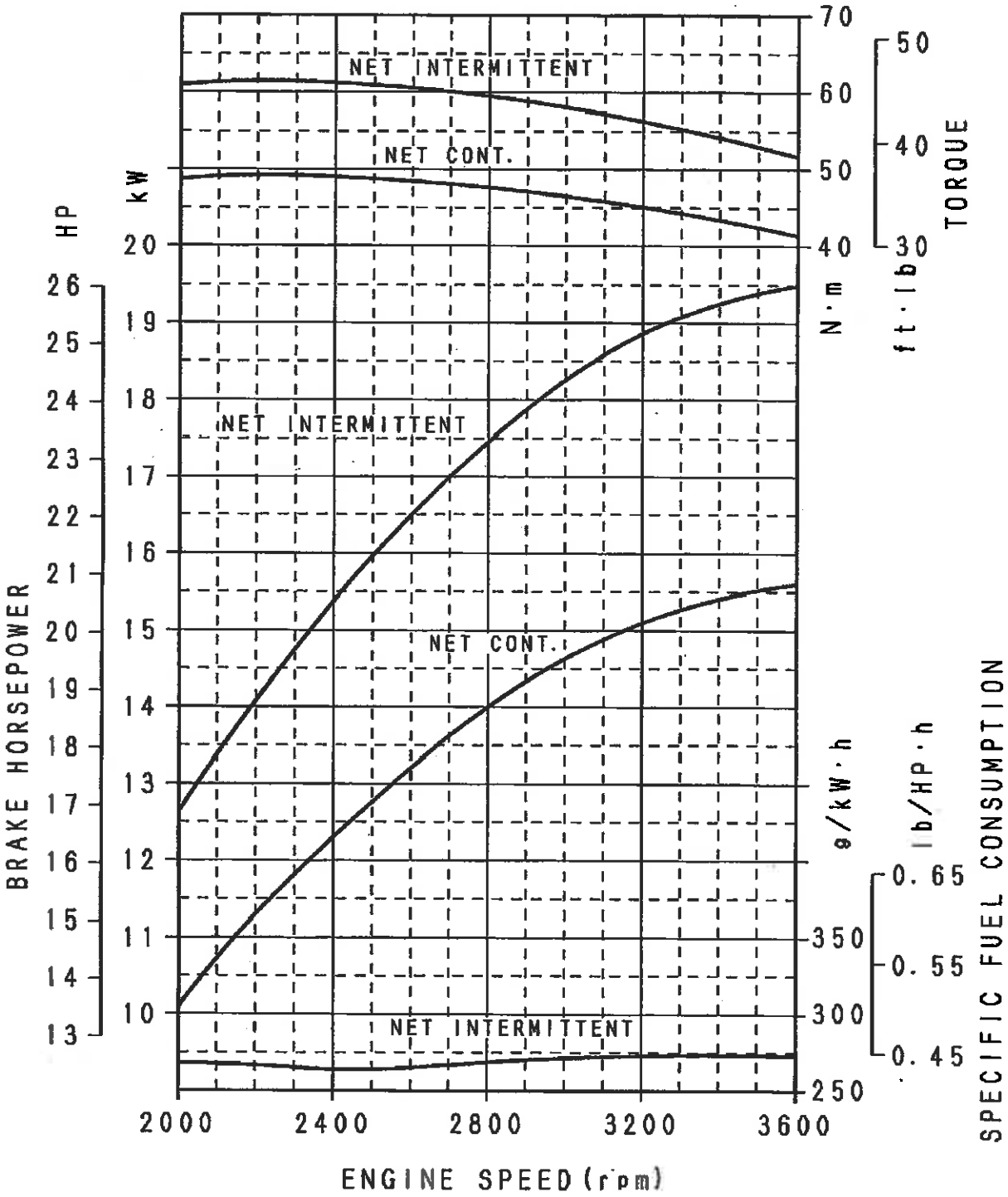

3. DIMENSIONS

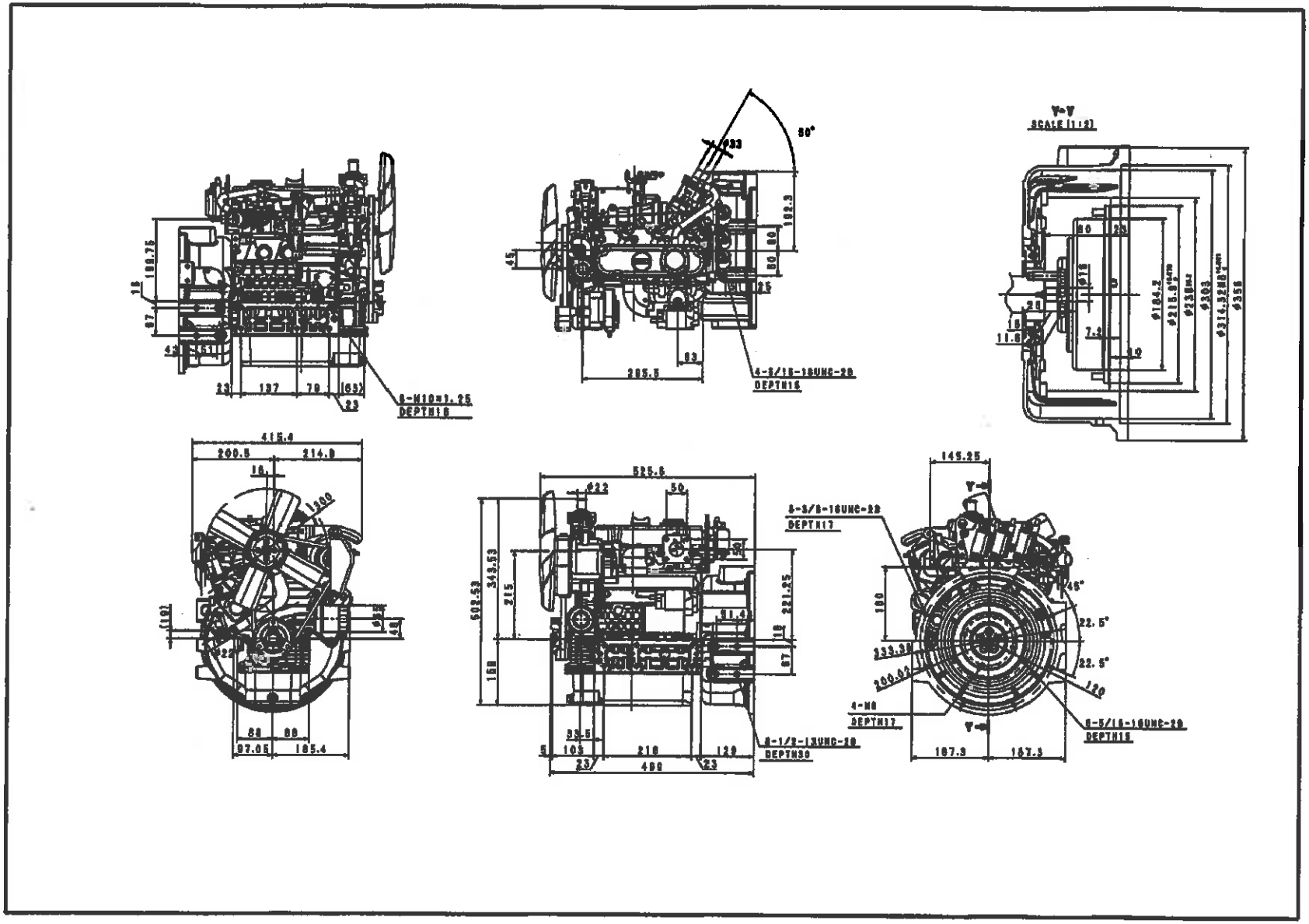

4. TECHNICAL DATA

ITEM		SPECIFICATIONS
Engine model		DG972-SAEH-S1
Brake horse power		See attached sheet 4-1)
Top Clearance		1.35 to 1.65mm (0.05315 to 0.06496in)
Compression pressure		1.32MPa (192psi)
Fuel consumption		See attached sheet 4-2)
Lube. oil consumption		Max.0.67g/kWh (0.5g/HPh) at rated load
Lube. oil pressure		at idling speed: more than 69kPa (more than 9.95psi)
		at rated speed: 196 to 441kPa (28.44 to 63.99psi)
Noise level		See attached sheet 4-3)
Combustion air requirements		See attached sheet (Refer to 25deg.C and 1000hPa) 4-4)
Cooling air requirements		
Combustion and cooling air requirements		
Exhaust gas volume		See attached sheet (Refer to 25deg.C and 1000hPa) 4-5)
Cold starting limits		-15deg.C (5deg.F)
Heat rejection		See attached sheet 4-6)
Angles of tilt	Front or Rear down	30° (Less than 10min. continuous operation)
		20° (Continuous operation)
	Left or Right side down	30° (Less than 10min. continuous operation)
		20° (Continuous operation)
Valve timing		[Inlet valve] Open: TDC –20° Close: BDT +45°
		[Exhaust valve] Open: BDC –50° Close: TDC +15°
Cooling fan data		See attached sheet 4-7)
Center of gravity		See attached sheet 4-8)
Unbalanced forces of engines		See attached sheet 4-9)
Mass elastic system		See attached sheet 4-10)
Thermostat specifications		Opening temperature: 71±1.5deg.C (159.8±2.7deg.F)
		Fully opened temperature: 85deg.C (185deg.F) [at Thermostat lift:8mm (0.31in)]

4-1) BRAKE HORSE POWER

SAE J1349

Engine speed	rpm	2000	2400	2800	3200	3600
Net intermittent	kW	12.6	15.4	17.4	18.9	19.5
	HP	16.9	20.6	23.3	25.3	26.1
	PS	17.1	20.9	23.7	25.7	26.5
Net continuous	kW	10.1	12.3	13.9	15.1	15.6
	HP	13.5	16.5	18.7	20.3	20.9
	PS	13.7	16.8	18.9	20.6	21.2

Note

1. Conversion rates 1kW=1.35962PS=1.34048HP
   1PS=0.7355kW=0.985925HP
   1HP=0.7457kW=1.01428PS
2. Fuel detail Japanese standard gas
   higher calorific value : 11000kcal/m^3 (1236BTU/ft^3)
   supply pressure : 0.98 – 2.45kPa (7.35 – 18.38mmHg)

4-2) FUEL CONSUMPTION

Specific at net intermittent (SAE J1349)

Engine speed	rpm	2000	2400	2800	3200	3600
Brake horse power	kW	12.6	15.4	17.4	18.9	19.5
	HP	16.9	20.6	23.3	25.3	26.1
	PS	17.1	20.9	23.7	25.7	26.5
Fuel consumption	g/kWh	269	264	269	273	273
	g/HPh	200	197	200	204	204
	g/PSh	198	194	198	201	201
	lb/HPh	0.442	0.434	0.442	0.449	0.449

Note

1. Conversion rates 1kW=1.35962PS=1.34048HP 1kg=2.20462lb (1g=0.00220462lb)
   1PS=0.7355kW=0.985925HP 1lb=0.45359kg
   1HP=0.7457kW=1.01428PS
2. Fuel detail Japanese standard gas
   higher calorific value : 11000kcal/m^3 (1236BTU/ft^3)
   supply pressure : 0.98 – 2.45kPa (7.35 – 18.38mmHg)

4-3) NOISE LEVEL

Load × rpm	Unit	Sound pressure at 1m(3.3ft)
0/4 × 3850	dB(A)	90.0
4/4 × 3850 15.6kW (20.9HP)	dB(A)	92.0
0/4 × 1500	dB(A)	72.0

These data show the average noise level at four points.

Note

1. Measurement conditions : With radiator, cooling fan, air cleaner and muffler.

4-4) AIR REQUIREMENTS

1. Combustion air requirements (Refer to 25deg.C and 1000hPa)

rpm	2000	2400	2800	3200	3600
L/sec	12.35	14.81	17.28	19.75	22.22
m^3/h	44.44	53.33	62.22	71.11	80.00
in^3/sec	753	904	1055	1205	1356
ft^3/min	26.13	31.35	36.58	41.80	47.03

Combustion air requirements calculating formula

$Q_1=Vh \cdot N \cdot C \cdot \eta \cdot 10^{-3}$

Q_1: Amount of intake air (m^3/min)
Vh: Total displacement (L)
N: Engine speed (rpm)
C: Coefficient=0.5
η: Intake efficiency
Natural Gas: 0.77

2. Cooling air requirements (Refer to 25deg.C and 1000hPa)

rpm	2000	2400	2800	3200	3600
L/sec	571.2	737.2	824.7	833.9	764.7
m^3/h	2056	2654	2969	3002	2753
in^3/sec	34859	44984	50327	50888	46667
ft^3/min	1210.2	1561.8	1747.3	1766.7	1620.2

Above data is decided by following conditions.

1. Using the standard radiator.
2. Engine is run as open unit.

3. Combustion and cooling air requirements (Refer to 25deg.C and 1000hPa)

rpm	2000	2400	2800	3200	3600
L/sec	583.5	752.0	842.0	853.7	786.9
m^3/h	2100.4	2707.3	3031.2	3073.1	2833.0
in^3/sec	35612	45888	51382	52093	48023
ft^3/min	1236.3	1593.2	1783.9	1808.5	1667.2

Note

1. Cooling fan and fan pulley specifications(Cooling fan Part No. 15881-74112)

Item	
Fan diameter	300mm (11.81in)
No. of blade and type of shape	4, S type
Diameter of fan driving pulley	100mm (3.94in)
Diameter of fan pulley	84mm (3.31in)

2. Conversion rates

$1L=61.0237in^3=0.035315ft^3$
$1ft^3=28.3168L$
$1L/sec=3.6m^3/h=2.1189ft^3/min$

4-5) EXHAUST GAS VOLUME

Refer to 25deg.C and 1000hPa

rpm	2000	2400	2800	3200	3600
L/sec	35.46	42.55	49.65	56.74	63.83
m^3/h	127.67	153.19	178.73	204.26	229.80
in^3/sec	2164	2597	3030	3462	3895
ft^3/min	75.05	90.06	105.07	120.08	135.09

Note

1. Conversion rates $1L=61.0237in^3=0.035315ft^3$
   $1ft^3=28.3168L$
   $1L/sec=3.6m^3/h=127.133ft^3/hr$

4-6) HEAT REJECTION TO COOLING WATER

1. Specific at net intermittent (SAE J1349)

Engine speed	rpm	2000	2400	2800	3200	3600
Brake horse power	kW	12.6	15.4	17.4	18.9	19.5
	HP	16.9	20.6	23.3	25.3	26.1
	PS	17.1	20.9	23.7	25.7	26.5
Fuel consumption	g/kWh	269	264	269	273	273
	g/HPh	200	197	200	204	204
	g/PSh	198	194	198	201	201
	lb/HPh	0.442	0.434	0.442	0.449	0.449
Heat rejection to cooling water	MJ/h	29.05	31.52	38.79	45.13	51.82
	kcal/h	6940	7529	9267	10781	12379
	BTU/h	12491	13551	16679	19404	22281

Note

Heat rejection to cooling water calculating formula

Ho=Hu•Ne•be•i

Ho: Heat rejection to cooling water

Hu: Fuel low calorific value

Japanese standard gas; 49.4MJ/kg, 11800kcal/h, 212391BTU/lb

Ne: Brake horse power

Be: Specific fuel consumption

i: Dispersion ratio to cooling water

4-7) COOLING FAN DATA

1. Performance curves <P-Q>

- Part No. 15881-74110 (Applicable for DG972)

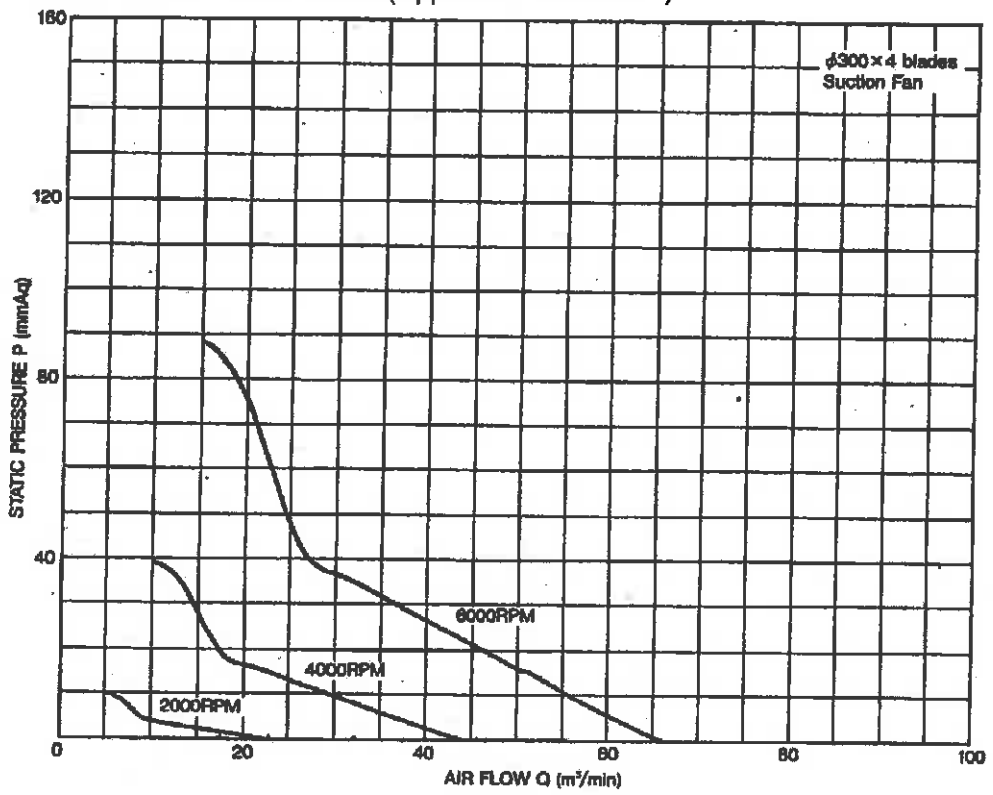

4-8) CENTER OF GRAVITY

1. With standard flywheel and rear-end plate

Model	Dry weight kg (lb)	Center of gravity		
		X mm (in)	Y mm (in)	Z mm (in)
WG/DF972	72.0 (159)	-25.5 (-1.00)	73.3 (2.89)	179.5 (7.07)

2. With SAE flywheel and flywheel housing

Model	Dry weight kg (lb)	Center of gravity		
		X mm (in)	Y mm (in)	Z mm (in)
DG972 -SAEH-S1	95.4 (210)	-10.0 (0.39)	28.0 (1.10)	207.0 (8.15)

Note
Cooling water and lubricating oil weight is not included in above engine weight.

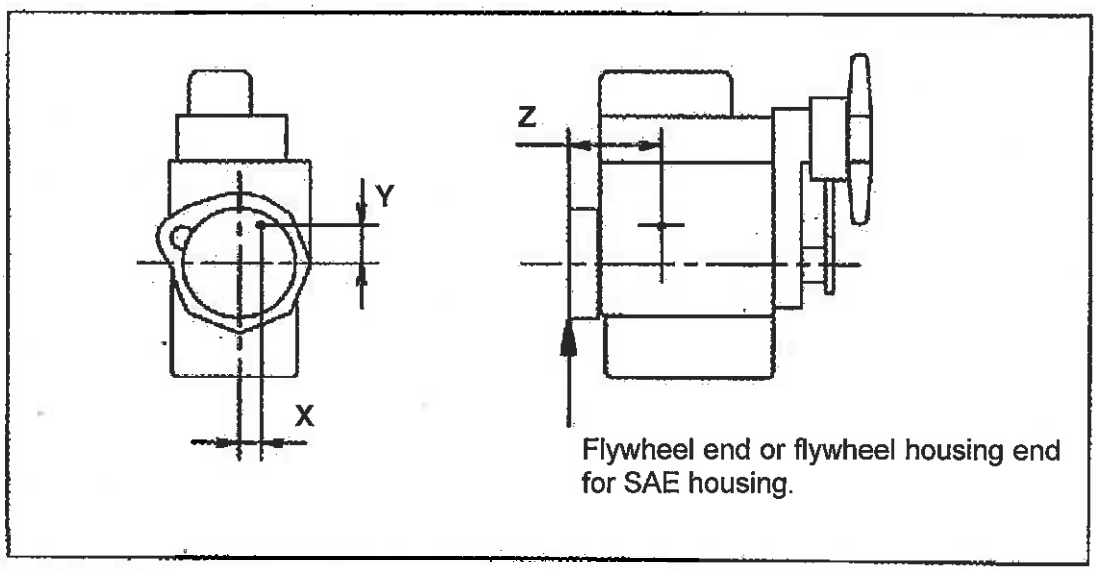

Flywheel end or flywheel housing end for SAE housing.

4-9) UNBALANCED FORCES OF ENGINES

1. Base data

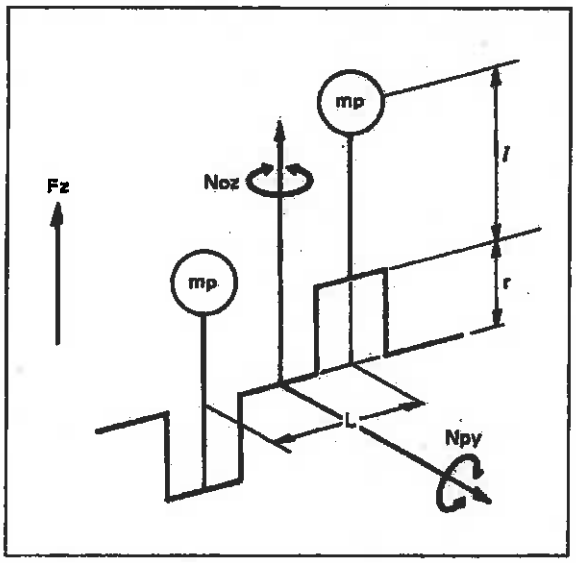

FZ: Unbalanced inertia force
Npy, Noz: Unbalanced inertia couple
mp: Reciprocating mass
r: Crank radius
l: Center distance of connecting rod
L: Cylinder distance
ω: Angular velocity

ω=2πn/60	n: Engine speed(rpm)

l=0.098m r=0.0368m L=0.080m	Cylinder bore (mm)	mp (kg)
	74.5	0.37/9.80665

2. Unbalanced inertia force and couple

($x\omega^2$)

Model	No. of Cylinder	Cylinder Bore	Order	Fz	Npy	Noz
WG/DF/DG 972	3	74.5mm	1	0	0.000096	0.000096
			2	0	0.000072	0

▼An example of calculation

Calculation condition	ω^2	Fz, Npy, Noz		
			Order	Calculation
Engine model DG972 Engine speed 3600(rpm)	$[2 \times \pi \times 3600/60]^2$ =142122	Fz	1	0
			2	0
		Npy	1	0.000096 × 142122=13.6kg
			2	0.000072 × 142122=10.2kg
		Noz	1	0.000096 × 142122=13.6kg
			2	0

4-10) MASS ELASTIC SYSTEM

Equivalent torsional vibration data

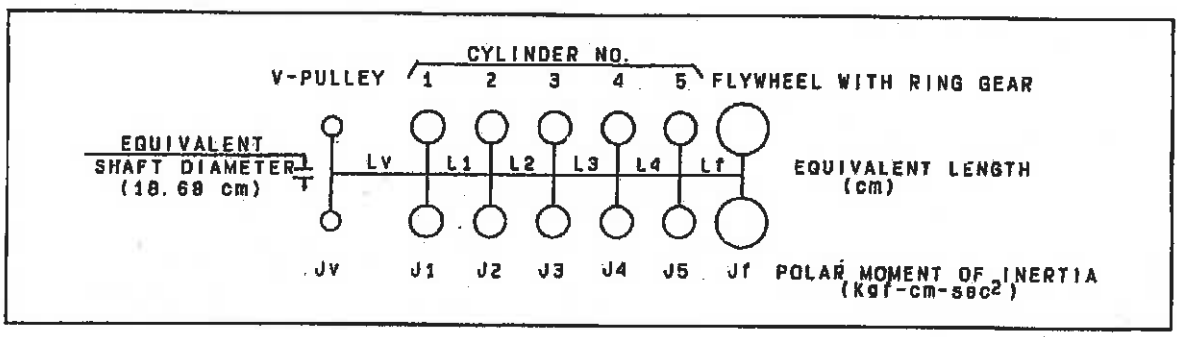

MODEL	EQUIVALENT LENGTH (cm)				POLAR MOMENT OF INERTIA (kgfcm-sec^2)				
	LV	L1	L2	Lf	JV	J1	J2	J3	Jf
DG972 -SAEH-S1	35082	4528	4528	2824	0.013	0.026	0.026	0.026	1.281

Note: Flywheel E8052-25110, V-Pulley 16861-74280

5. FUEL SYSTEM AND FUEL DIAGRAM

- **All fuel connections added to this engine must be installed by qualified personnel utilizing recognized procedures and standards.**
- **These non-KUBOTA installed parts, such as hoses, shutoff solenoid valve should be approved for Natural gas use.**
- **An approved, listed fuel filter and shutoff solenoid valve must be installed between the gas tank and Kubota regulator.**
- **Two fuel cut solenoids must be installed in series before the regulator on the fuel supply line for safety (backup) purpose.**

1. Tightening torque and leak check

1) The joint must be installed to the gas entrance of the regulator by screw with O-ring. Screw is tightened to the specified torque using a driver, and leak check must be performed as shown in the below table.
2) The connector on the gas mixer may be mounted on any position since it is not sealed. The lock nut may be loosened using a wrench. The connector may be changed to any specified angle. The lock nut should be tightened to the specified torque using a wrench as shown in the below table.

[TIGHTENING TORQUE AND LEAK CHECK]

			Tightening torque			Leak check pressure
	Qty.	Size	Nm	kgfm	ft-lb	
SCREW	2	M4	1.9 to 2.9	0.2 to 0.3	1.5 to 2.2	Soap solution or its equivalent
LOCK NUT	1	M16 × 1	19.6 to 39.2	2.0 to 4.0	14.5 to 28.9	

2. Setting of the regulator

1) Install the regulator in **UPRIGHT** position, it must be installed within 4G vibration level. If not, it may not supply necessary fuel to the engine.
2) **DO NOT** connect any extension hose to the air vent pipe of the regulator. This may cause an improper supply of fuel to the engine.

3. Caution for FUEL SYSTEM

The standard engine is equipped with ϕ6.6 jet for the fuel calorific gas value of 11000kcal/m^3 (1236BTU/ft^3).
When the engine is operated with the different calorific gas, it is necessary to select the correct jet of the mixer.
In that case, refer to the manual **[Adjustment for Natural Gas Engine DG972]**.

Japanese standard gas higher calorific value : 11000kcal/m^3 (1236BTU/ft^3)
supply pressure : 0.98 – 2.45kPa (7.35 – 18.38mmHg)

Equipments Vacuum Meter : Not KUBOTA supplied
Adjustable Jet : Service Tool

4. Application Check Item

The items as shown below must be managed for all engines, and these items must be informed to KUBOTA with Application Check results.
Refer to the attached sheet **[Application Check Sheet for DG972]**.

1) The diameter of the jet (with the intake vacuum curve)
2) The calorific value of the gas
3) The supply pressure of gas
4) The serial number of the engine

5. Fuel diagram

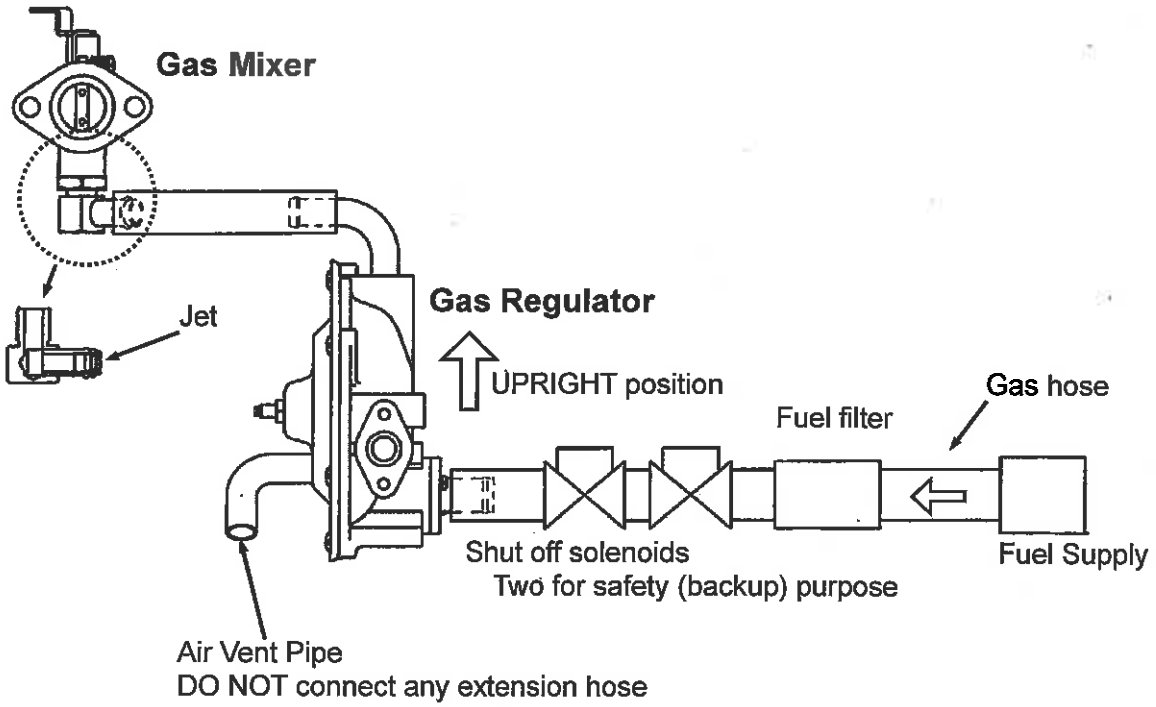

NATURAL GAS ENGINE

KUBOTA DG SERIES (3-cylinder)

DG972-E2

EPA Tier 2

RATED POWER

17.6kW@3600rpm

Photograph may show non-standard equipment.

PERFORMANCE CURVE

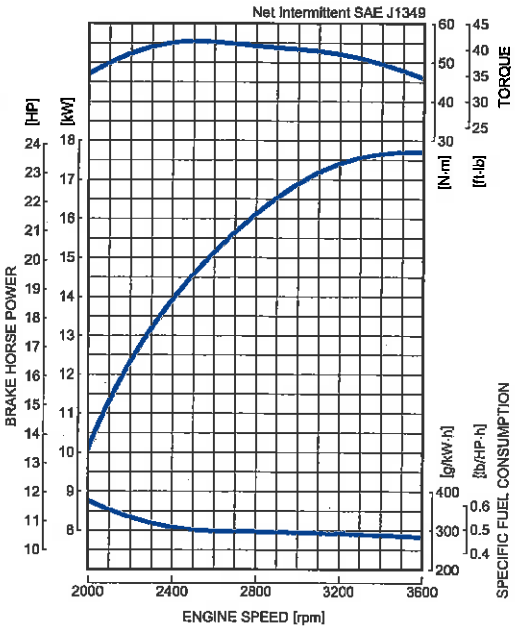

FEATURES and BENEFITS

New Engine Series

- The Kubota DG Series offers a new solution to the increasing needs for natural gas engine. The diesel engine based Kubota DG Series gives users the same foot-print, reliability and durability of D902, WG972, and DF972 acknowledged as the world's top quality small industrial engines.
- Kubota offers SAE Flywheel Housing and Rear End Plate specifications for the DG972 engine. These options offer users flexible Power Take Off (PTO) choices.
- The Kubota DG Series is designed to endure use outdoors under severe environment. This series is equipped with a bypass breather tube to avoid freezing below zero.

Emission

- Kubota DG Series complies with EPA Tier 2 Emissions Regulations. EPA regulation is one of the most stringent emissions regulations in the world.

Best Fuel System

- Specialized for Natural Gas use, the DG972 engine eliminated the carburetor, regulator and a fuel filter parts, which are only necessary for Gasoline or LPG use. Also, Kubota adopts the best jet set and the ignition timing that provides the best engine performance in severe conditions.

Ease maintenance cost and time

- Mechanical governor system will contribute to lower maintenance cost and prevents users from having to deal with complicated electric maintenance. Moreover, water resistant spark plug caps are adopted for outdoor use.

DG972-E2

KUBOTA DG SERIES

GENERAL SPECIFICATION

Model		DG972-E2
Emission Regulation		Tier 2
Type		Vertical 4-cycle Liquid Cooled Natural Gas
Number of Cylinders		3
Bore	mm (in)	74.5 (2.93)
Stroke	mm (in)	73.6 (2.9)
Displacement	L (cu.in)	0.962 (58.70)
Fuel		Natural Gas
Intake System		Naturally Aspirated
Maximum Speed	rpm	3600
Output: Net Intermittent	kW	17.6
	hp	23.6
	ps	23.9
Direction of Rotation		Counterclockwise Viewed on Flywheel
Oil Pan Capacity	L (gal)	3.7 (0.98)
Starter Capacity	V-kW	12-1.0
Alternator Capacity	V-A	12-40
Length	mm (in)	525.5 (20.69)*1 / 452.5 (17.81)*2
Width	mm (in)	415.4 (16.35)
Height (1)	mm (in)	502.5 (19.78)
Height (2)	mm (in)	159.0 (6.26)
Dry Weight	kg (lb)	72.0 (158.7)*1 / 95.4 (210.3)*2

*Specification is subject to change without notice.
*Output: Net Intermittent SAE J1349
*Dry weight is according to Kubota's standard specification. When specification varies, the weight will vary accordingly.
*1 with SAE Flywheel and Housing
*2 with Rear End Plate

DIMENSIONS

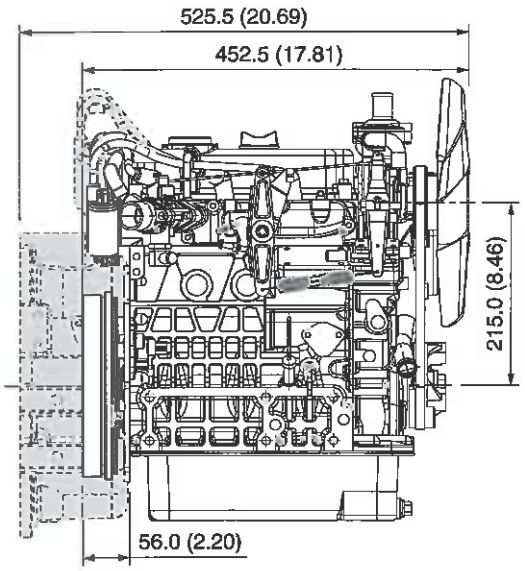

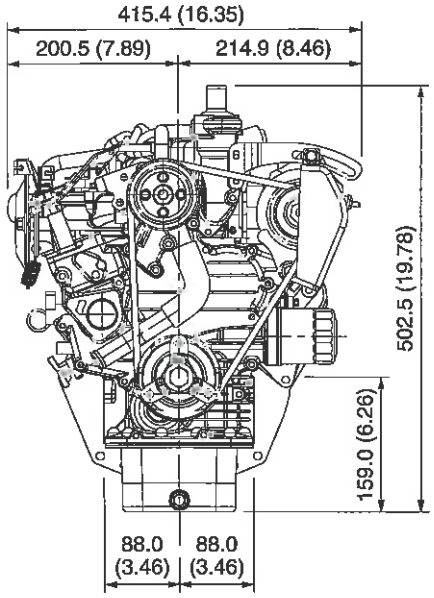

Kubota

Your Driving Force
KUBOTA ENGINE

KUBOTA Corporation
2-47, Shikitsuhigashi 1-chome, Naniwa-ku, Osaka, 556-8601 Japan
Fax: 06-6648-3521
http://www.engine.kubota.co.jp

1334-01-COM '08.09. .STD