Pursley
G70-A011A
017-00083

CONESTOGA-ROVERS & ASSOCIATES

www.CRAworld.com

General Permit Application G70-A Class II Administrative Update

Maxwell Horizontal Well Pad

Prepared for: Antero Resources Corporation

RECEIVED
FEB 07 2015
WV DEP / DIV. OF AIR QUALITY

Conestoga-Rovers & Associates
6320 Rothway, Suite 100
Houston, Texas 77040

February 2015 • 082715 • Report No. 61

Partners in Sustainability

Table of Contents

G70-A General Permit Registration Form

Attachment A	Current Business Certificate – No Changes
Attachment B	Process Description
Attachment C	Description of Fugitive Emissions
Attachment D	Process Flow Diagram
Attachment E	Plot Plan
Attachment F	Area Map
Attachment G	Emission Unit Data Sheets/G70-A Section Applicability Form
Attachment H	Air Pollution Control Device Data Sheet – Not applicable (removal of flare)
Attachment I	Emission Calculations
Attachment J	Class I Legal Advertisement
Attachment K	Electronic Submittal – Not applicable
Attachment L	General Permit Registration Application Fee
Attachment M	Siting Criteria Waiver – Not applicable
Attachment N	Material Safety Data Sheets – No Changes
Attachment O	Emissions Summary Sheet

* Note: Attachments which either have no changes from initial permit application or not applicable were not included in this submittal. The Attachment letter identifiers consistent with the G70-A application guidance and instructions were maintained for easier identification/reference.

WEST VIRGINIA
DEPARTMENT OF ENVIRONMENTAL PROTECTION
DIVISION OF AIR QUALITY
601 57th Street, SE
Charleston, WV 25304
Phone: (304) 926-0475 • www.dep.wv.gov/daq

APPLICATION FOR GENERAL PERMIT REGISTRATION

CONSTRUCT, MODIFY, RELOCATE OR ADMINISTRATIVELY UPDATE

A STATIONARY SOURCE OF AIR POLLUTANTS

☐ CONSTRUCTION ☐ MODIFICATION ☐ RELOCATION ☐ CLASS I ADMINISTRATIVE UPDATE
☒ CLASS II ADMINISTRATIVE UPDATE

CHECK WHICH TYPE OF GENERAL PERMIT REGISTRATION YOU ARE APPLYING FOR:

- ☐ **G10-D** – Coal Preparation and Handling
- ☐ **G20-B** – Hot Mix Asphalt
- ☐ **G30-D** – Natural Gas Compressor Stations
- ☐ **G33-A** – Spark Ignition Internal Combustion Engines
- ☐ **G35-A** – Natural Gas Compressor Stations (Flare/Glycol Dehydration Unit)
- ☐ **G40-C** – Nonmetallic Minerals Processing
- ☐ **G50-B** – Concrete Batch
- ☐ **G60-C** - Class II Emergency Generator
- ☐ **G65-C** – Class I Emergency Generator
- ☒ **G70-A** – Class II Oil and Natural Gas Production Facility

SECTION I. GENERAL INFORMATION

1. Name of applicant (as registered with the WV Secretary of State's Office):
Antero Resources Corporation

2. Federal Employer ID No. **(FEIN):**
80-0162034

3. Applicant's mailing address:
1615 Wynkoop St.
Denver, CO, 80202

4. Applicant's physical address:
1615 Wynkoop St.
Denver, CO, 80202

5. If applicant is a subsidiary corporation, please provide the name of parent corporation:

6. **WV BUSINESS REGISTRATION.** Is the applicant a resident of the State of West Virginia? ☐ **YES** ☒ **NO**

- IF **YES,** provide a copy of the Certificate of **Incorporation/ Organization / Limited Partnership** (one page) including any name change amendments or other Business Registration Certificate as **Attachment A.**
- IF **NO,** provide a copy of the **Certificate of Authority / Authority of LLC / Registration** (one page) including any name change amendments or other Business Certificate as **Attachment A.**

SECTION II. FACILITY INFORMATION

7. Type of plant or facility (stationary source) to be constructed, modified, relocated or administratively updated (e.g., coal preparation plant, primary crusher, etc.):
Natural Gas and Oil Production Facility

8a. Standard Industrial Classification AND 8b. North American Industry
Classification (SIC) code: 1311 System (NAICS) code: 211111

9. DAQ Plant ID No. (for existing facilities only):
017-00083

10. List all current 45CSR13 and other General Permit numbers associated with this process (for existing facilities only):
G70-A011

A: PRIMARY OPERATING SITE INFORMATION

11A. Facility name of primary operating site:	12A. Address of primary operating site:
Maxwell Horizontal	Mailing: N/A Physical: Near Brushy Fork Rd and Co Rte 55

13A. Does the applicant own, lease, have an option to buy, or otherwise have control of the proposed site? ☒ YES ☐ NO

- IF **YES**, please explain: Antero is leasing the mineral rights for this site
- IF **NO**, YOU ARE NOT ELIGIBLE FOR A PERMIT FOR THIS SOURCE.

14A. – For **Modifications or Administrative Updates** at an existing facility, please provide directions to the present location of the facility from the nearest state road;

From New Milton:
–Head southeast 2.1 miles on Co Rte 25/Meathouse Fork
–Turn right at Brushy Fork and drive approximately 0.6 miles
–Turn right at the second fork
–Pad is located approximately 1.1 miles down access road

– For Construction or Relocation permits, please provide directions to the proposed new site location from the nearest state road. Include a **MAP** as **Attachment F.**

15A. Nearest city or town:	16A. County:	17A. UTM Coordinates:
New Milton	Doddridge	Northing (KM): 4339.87252 Easting (KM): 526.53897 Zone: 17S

18A. Briefly describe the proposed new operation or change (s) to the facility:	19A. Latitude & Longitude Coordinates (NAD83, Decimal Degrees to 5 digits):
Removal of Flare. Insufficient emission flow rate to the flare due to low throughput	Latitude: 39.207694 Longitude: -80.69283

B: 1ST ALTERNATE OPERATING SITE INFORMATION (only available for G20, G40, & G50 General Permits)

11B. Name of 1st alternate operating site:	12B. Address of 1st alternate operating site:
	Mailing: Physical:

13B. Does the applicant own, lease, have an option to buy, or otherwise have control of the proposed site? ☐ YES ☐ NO

- IF **YES**, please explain:
- IF **NO**, YOU ARE NOT ELIGIBLE FOR A PERMIT FOR THIS SOURCE.

14B. – For **Modifications or Administrative Updates** at an existing facility, please provide directions to the present location of the facility from the nearest state road;

– For Construction or Relocation permits, please provide directions to the proposed new site location from the nearest state road. Include a **MAP** as **Attachment F.**

15B. Nearest city or town:	16B. County:	17B. UTM Coordinates: Northing (KM): _____ Easting (KM): _____ Zone: _____
18B. Briefly describe the proposed new operation or change (s) to the facility:		19B. Latitude & Longitude Coordinates (NAD83, Decimal Degrees to 5 digits): Latitude: _____ Longitude: _____

C: 2ND ALTERNATE OPERATING SITE INFORMATION (only available for G20, G40, & G50 General Permits):

11C. Name of 2nd alternate operating site:	12C. Address of 2nd alternate operating site: Mailing: _____ Physical: _____

13C. Does the applicant own, lease, have an option to buy, or otherwise have control of the proposed site? ☐ YES ☐ NO

- IF **YES**, please explain: _____
- IF **NO**, YOU ARE NOT ELIGIBLE FOR A PERMIT FOR THIS SOURCE.

14C.
- For **Modifications or Administrative Updates** at an existing facility, please provide directions to the present location of the facility from the nearest state road;
- For Construction or Relocation permits, please provide directions to the proposed new site location from the nearest state road. Include a **MAP** as **Attachment F.**

_____

15C. Nearest city or town:	16C. County:	17C. UTM Coordinates: Northing (KM): _____ Easting (KM): _____ Zone: _____
18C. Briefly describe the proposed new operation or change (s) to the facility:		19C. Latitude & Longitude Coordinates (NAD83, Decimal Degrees to 5 digits): Latitude: _____ Longitude: _____

20. Provide the date of anticipated installation or change:	21. Date of anticipated Start-up if registration is granted:
Upon issuance of the permit ☐ If this is an **After-The-Fact** permit application, provide the date upon which the proposed change did happen: : ___/___/___	Upon issuance of the permit

22. Provide maximum projected **Operating Schedule** of activity/activities outlined in this application if other than 8760 hours/year. (Note: anything other than 24/7/52 may result in a restriction to the facility's operation).

Hours per day 24 Days per week 7 Weeks per year 52 Percentage of operation 100%

SECTION III. ATTACHMENTS AND SUPPORTING DOCUMENTS

23. Include a check payable to WVDEP – Division of Air Quality with the appropriate **application fee** (per 45CSR22 and 45CSR13).

24. Include a **Table of Contents** as the first page of your application package.

All of the required forms and additional information can be found under the Permitting Section (General Permits) of DAQ's website, or requested by phone.

25. Please check all attachments included with this permit application. Please refer to the appropriate reference document for an explanation of the attachments listed below.

- ☐ ATTACHMENT A : CURRENT BUSINESS CERTIFICATE
- ☒ ATTACHMENT B: PROCESS DESCRIPTION
- ☒ ATTACHMENT C: DESCRIPTION OF FUGITIVE EMISSIONS
- ☒ ATTACHMENT D: PROCESS FLOW DIAGRAM
- ☒ ATTACHMENT E: PLOT PLAN
- ☒ ATTACHMENT F: AREA MAP
- ☒ ATTACHMENT G: EQUIPMENT DATA SHEETS AND REGISTRATION SECTION APPLICABILITY FORM
- ☐ ATTACHMENT H: AIR POLLUTION CONTROL DEVICE SHEETS
- ☒ ATTACHMENT I: EMISSIONS CALCULATIONS
- ☒ ATTACHMENT J: CLASS I LEGAL ADVERTISEMENT
- ☐ ATTACHMENT K: ELECTRONIC SUBMITTAL
- ☒ ATTACHMENT L: GENERAL PERMIT REGISTRATION APPLICATION FEE
- ☐ ATTACHMENT M: SITING CRITERIA WAIVER
- ☐ ATTACHMENT N: MATERIAL SAFETY DATA SHEETS (MSDS)
- ☒ ATTACHMENT O: EMISSIONS SUMMARY SHEETS
- ☐ OTHER SUPPORTING DOCUMENTATION NOT DESCRIBED ABOVE (Equipment Drawings, Aggregation Discussion, etc.)

Please mail an original and two copies of the complete General Permit Registration Application with the signature(s) to the DAQ Permitting Section, at the address shown on the front page of this application. Please DO NOT fax permit applications. For questions regarding applications or West Virginia Air Pollution Rules and Regulations, please refer to the website shown on the front page of the application or call the phone number also provided on the front page of the application.

SECTION IV. CERTIFICATION OF INFORMATION

This General Permit Registration Application shall be signed below by a Responsible Official. A Responsible Official is a President, Vice President, Secretary, Treasurer, General Partner, General Manager, a member of a Board of Directors, or Owner, depending on business structure. A business may certify an Authorized Representative who shall have authority to bind the Corporation, Partnership, Limited Liability Company, Association, Joint Venture or Sole Proprietorship. Required records of daily throughput, hours of operation and maintenance, general correspondence, Emission Inventory, Certified Emission Statement, compliance certifications and all required notifications must be signed by a Responsible Official or an Authorized Representative. If a business wishes to certify an Authorized Representative, the official agreement below shall be checked off and the appropriate names and signatures entered. Any administratively incomplete or improperly signed or unsigned Registration Application will be returned to the applicant.

FOR A CORPORATION (domestic or foreign)

☐ I certify that I am a President, Vice President, Secretary, Treasurer or in charge of a principal business function of the corporation

FOR A PARTNERSHIP

☐ I certify that I am a General Partner

FOR A LIMITED LIABILITY COMPANY

☐ I certify that I am a General Partner or General Manager

FOR AN ASSOCIATION

☐ I certify that I am the President or a member of the Board of Directors

FOR A JOINT VENTURE

☐ I certify that I am the President, General Partner or General Manager

FOR A SOLE PROPRIETORSHIP

☐ I certify that I am the Owner and Proprietor

☐ *I hereby certify that* (please print or type) _____

is an Authorized Representative and in that capacity shall represent the interest of the business (e.g., Corporation, Partnership, Limited Liability Company, Association Joint Venture or Sole Proprietorship) and may obligate and legally bind the business. If the business changes its Authorized Representative, a Responsible Official shall notify the Director of the Office of Air Quality immediately, and/or,

I hereby certify that all information contained in this General Permit Registration Application and any supporting documents appended hereto is, to the best of my knowledge, true, accurate and complete, and that all reasonable efforts have been made to provide the most comprehensive information possible

Signature _____
(please use blue ink) Responsible Official Date

Name & Title Donald Gray, Environmental and Regulatory Manager
(please print or type)

Signature _____ 3-6-2015
(please use blue ink) Authorized Representative (if applicable) Date

Applicant's Name Antero Resources Corporation

Phone & Fax 303-357-6730 303-357-7315
Phone Fax

Email dgray@anteroresources.com

Attachment R
AUTHORITY OF CORPORATION
OR OTHER BUSINESS ENTITY (DOMESTIC OR FOREIGN)

TO: The West Virginia Department of Environmental Protection, Division of Air Quality

DATE: 6/14/13: 14 JUN, 2013

ATTN.: Director

Corporation's / other business entity's Federal Employer I.D. Number 80-0162034

The undersigned hereby files with the West Virginia Department of Environmental Protection, Division of Air Quality, a permit application and hereby certifies that the said name is a trade name which is used in the conduct of an incorporated business or other business entity.

Further, the corporation or the business entity certifies as follows:

(1) DONALD C. GRAY (is/are) the authorized representative(s) and in that capacity may represent the interest of the corporation or the business entity and may obligate and legally bind the corporation or the business entity.

(2) The corporation or the business entity is authorized to do business in the State of West Virginia.

(3) If the corporation or the business entity changes its authorized representative(s), the corporation or the business entity shall notify the Director of the West Virginia Department of Environmental Protection, Division of Air Quality, immediately upon such change.

KEVIN J. KILSTROM - VICE PRESIDENT

President or Other Authorized Officer
(Vice President, Secretary, Treasurer or other official in charge of a principal business function of the corporation or the business entity)

(If not the President, then the corporation or the business entity must submit certified minutes or bylaws stating legal authority of other authorized officer to bind the corporation or the business entity).

Secretary

Name of Corporation or business entity

Attachment B

Process Description

Attachment B

Process Description
Maxwell Horizontal Well Pad
Antero Resources Corporation
Doddridge, West Virginia

A mixture of condensate and entrained gas from the wells enters the Facility through a number of low pressure separators where the gas phase is separated from the liquid phase. Gas Production Unit (GPU) Heaters (H001, H002, and H003) are used in conjunction with the separators to help separate the gas from the liquid phases. These heaters are fueled by a slip stream of the separated gas. The separated gas from the low pressure separators will be metered and sent to the sales gas pipeline. The separated condensate and water from the separators flow to their respective storage tanks (TANKCOND001-006 and TANKPW001-002).

The Facility has six tanks (TANKCOND001-006) on site to store condensate and two tanks (TANKPW001-002) to store produced water prior to removal from the site. Flashing, working, and breathing losses from the tanks are vented to the atmosphere.

Condensate and produced water are transported off site on an as needed basis via tanker truck. Truck loading connections are in place to pump condensate (L001) and produced water (L002) from the storage tanks into tanker trucks. Emissions from the loading operations are vented to the atmosphere.

Emissions from the Facility's emission sources were calculated using the extended analysis of the condensate from Yoke No. 1H, one of the wells in the Maxwell Horizontal pad.

Maxwell Horizontal Pad calculation of potential to emit included all of the emission sources that belong to the same industrial grouping, are located on contiguous or adjacent properties, and are under the control of the same person. The nearest emission source that belongs to the same industrial grouping and under the control of the same person but not located on contiguous or adjacent property is the Coastal Hilltop Pad. This is approximately 2,500 feet southwest of the Facility.

Attachment C

Description of Fugitive Emissions

Attachment C

Description of Fugitive Emissions
Maxwell Horizontal Well Pad
Antero Resources Corporation
Doddridge, West Virginia

Sources of fugitive emissions include loading operations, haul road emissions, equipment leaks, and pneumatic control valves. Fugitive emissions were calculated using AP-42 factors. Routine equipment leaks are assumed to be occurring continuously throughout the year. Loading operations and haul road emissions only occur when tanker trucks are onsite. The fugitives emissions summary is also located in Attachment O.

EQUIPMENT LEAKS

Equipment include valves, flanges, and connectors installed in various process equipment such as gas production unit heaters, pipelines, separators, and compressors. Emissions are assumed to be occurring throughout the year. Detailed calculations are shown on Table 4.

PNEUMATIC CONTROL VALVES

Pneumatic control valves are part of the gas production unit heaters. Emissions are assumed to be occurring throughout the year. Detailed calculations are shown on Table 5.

LOADING OPERATIONS

Loading emissions occur when condensate and produce water are transferred out of the well site via tanker trucks. Fugitive emissions were estimated using AP-42 loading loss formula, L= 12.46*SPM/T, and Bryan & Engineering (BR&E) software known as Promax. Detailed calculations are shown in Table 8.

HAUL ROAD EMISSIONS

Haul road emissions are emitted when tanker trucks or service vehicles enter the Facility. The Facility is flat and unpaved. Detailed calculations are shown on Table 10.

Attachment C&O: G70-A Emissions Summary Sheet

Fugitive Emissions Data Summary Sheet

FUGITIVE EMISSIONS SUMMARY	All Regulated Pollutants Chemical Name/CAS 1	Maximum Potential Uncontrolled Emissions 2		Maximum Potential Controlled Emissions 3		Est. Method Used 4
		lb/hr	ton/yr	lb/hr	ton/yr	
Haul Road/Road Dust Emissions Paved Haul Roads	n/a					
Unpaved Haul Roads	PM, PM10, PM2.5	2.0266	0.0588	1.0133	0.0294	MB AP-42
Loading/Unloading Operations	VOCs	4.741	0.005	4.7413	0.0048	MB AP-42
	toluene (108883)	0.001	0.000	0.0008	0.0000	
	ethyl benzene (100414)	0.001	0.000	0.0010	0.0000	
	hexane (110543)	0.009	0.000	0.0089	0.0000	
	o,m,p-xylenes (95476,108383,106423)	0.002	0.000	0.0023	0.0000	
	CO2 Equivalent CO2 (124389), CH4	7.162	0.017	7.1616	0.0167	
	benzene (71432)	0.000	0.000	0.0001	0.0000	
	TAPs (benzene)	0.000	0.000	0.0001	0.0000	
Equipment Leaks (Components)	Benzene (71432)	Does not apply	0.0014	Does not apply	0.0014	MB AP-42
	Toluene (108883)		0.0126		0.0126	
	Ethyl benzene (100414)		0.0258		0.0258	
	Hexane (110543)		0.2474		0.2474	
	o,m,p-xylenes (95476,108383,106423)		0.0643		0.0643	
	CO2 Equivalent CO2 (124389)), CH4		89.9378		89.9378	
	VOCs		4.9117		4.9117	
	TAPs (benzene)		0.0014		0.0014	
Equipment Leaks (PCVs)	toluene (108883)	0.0000	0.0000	0.0000	0.0000	MB AP-42
	ethyl benzene (100414)	0.0000	0.0000	0.0000	0.0000	
	hexane (110543)	0.0051	0.0224	0.0051	0.0224	
	o,m,p-xylenes (95476,108383,106423)	0.0000	0.0000	0.0000	0.0000	
	CO2 Equivalent CO2 (124389)), CH4	2.8454	12.4629	2.8454	12.4629	
	VOCs	0.0429	0.1880	0.0429	0.1880	
	TAPs (benzene, formaldehyde)	0.0000	0.0000	0.0000	0.0000	

1 List all regulated air pollutants. Speciate VOCs, including all HAPs. Follow chemical name with Chemical Abstracts Service (CAS) number. LIST Acids, CO, CS_2, VOCs, H_2S, Inorganics, Lead, Organics, O_3, NO, NO_2, SO_2, SO_3, all applicable Greenhouse Gases (including CO_2 and methane), etc. DO NOT LIST H_2, H_2O, N_2, O_2, and Noble Gases.

2 Give rate with no control equipment operating. If emissions occur for less than 1 hr, then record emissions per batch in minutes (e.g. 5 lb VOC/20 minute batch).

3 Give rate with proposed control equipment operating. If emissions occur for less than 1 hr, then record emissions per batch in minutes (e.g. 5 lb VOC/20 minute batch).

4 Indicate method used to determine emission rate as follows: MB = material balance; ST = stack test (give date of test); EE = engineering estimate; O = other (specify).

Attachment C: Leak Source Data Sheet

Source Category	Pollutant	Number of Source Components (1)	Number of Components Monitored by Frequency2	Average Time to Repair (days) (3)	Estimated Annual Emission Rate (lb/yr) (4)
Pumps (5)	light liquid VOC [6,7]				
	heavy liquid VOC[8]				
	Non-VOC[9]				
Valves (10)	Gas VOC	150		First attempt within 5 days of detection and final repair within 15 days	2,484.03
	Light Liquid VOC	156		First attempt within 5 days of detection and final repair within 15 days	7,153.18
	Heavy Liquid VOC	--			--
	Non-VOC	--			--
Safety Relief Valves (11)	Gas VOC	See Valves		First attempt within 5 days of detection and final repair within 15 days	see Valves
	Non VOC	See Valves		First attempt within 5 days of detection and final repair within 15 days	see Valves
Open-ended Lines (12)	VOC				
	Non-VOC				
Sampling Connections (13)	VOC				
	Non-VOC				
Compressors	VOC				
	Non-VOC				
Flanges	VOC	39		First attempt within 5 days of detection and final repair within 15 days	55.97
	Non-VOC			First attempt within 5 days of detection and final repair within 15 days	237.15
Other	VOC	177		First attempt within 5 days of detection and final repair within 15 days	130.27
	Non-VOC			First attempt within 5 days of detection and final repair within 15 days	551.96

Attachment D

Process Flow Diagram

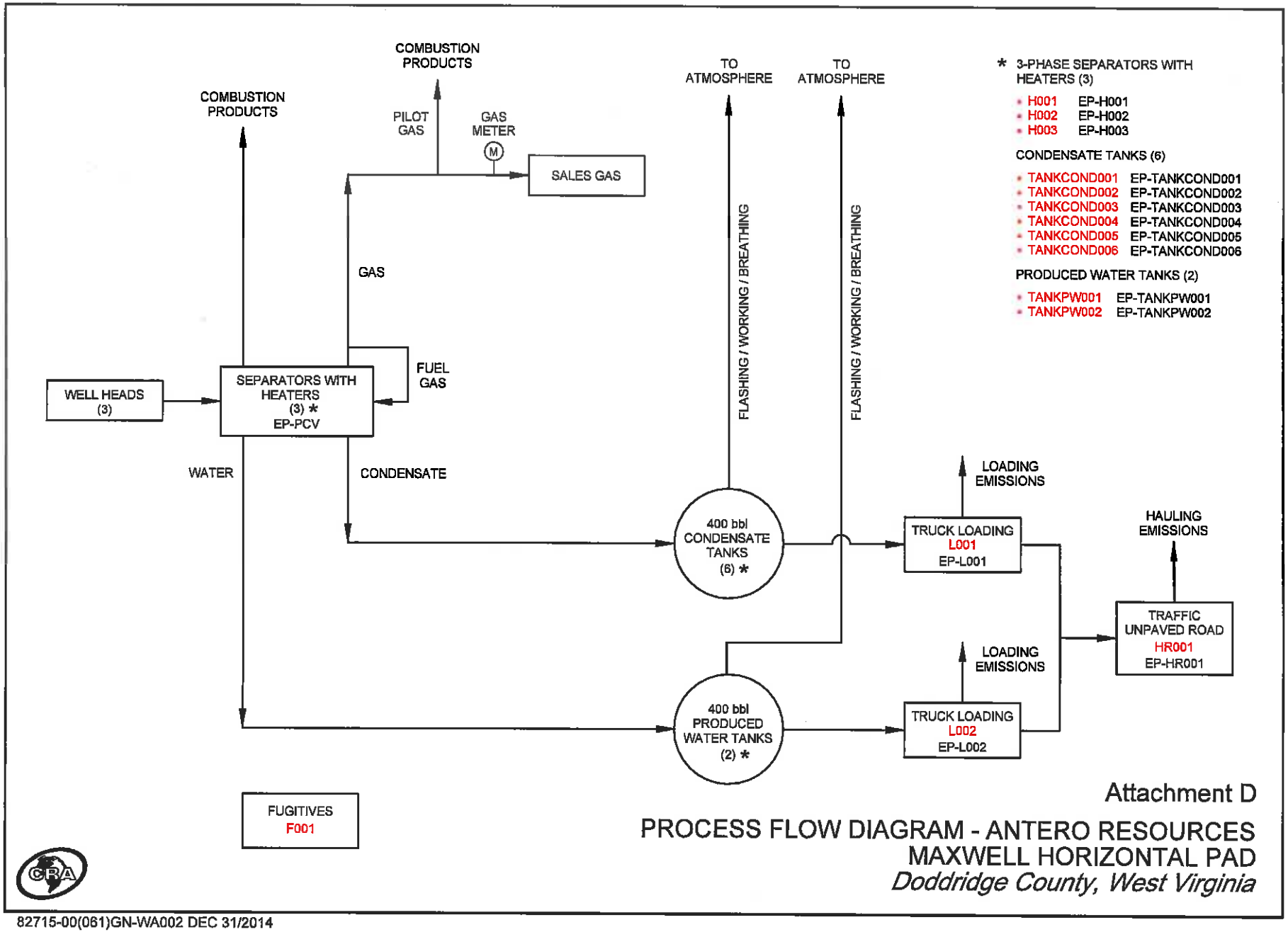

Attachment D

PROCESS FLOW DIAGRAM - ANTERO RESOURCES
MAXWELL HORIZONTAL PAD
Doddridge County, West Virginia

82715-00(061)GN-WA002 DEC 31/2014

Attachment E

Plot Plan

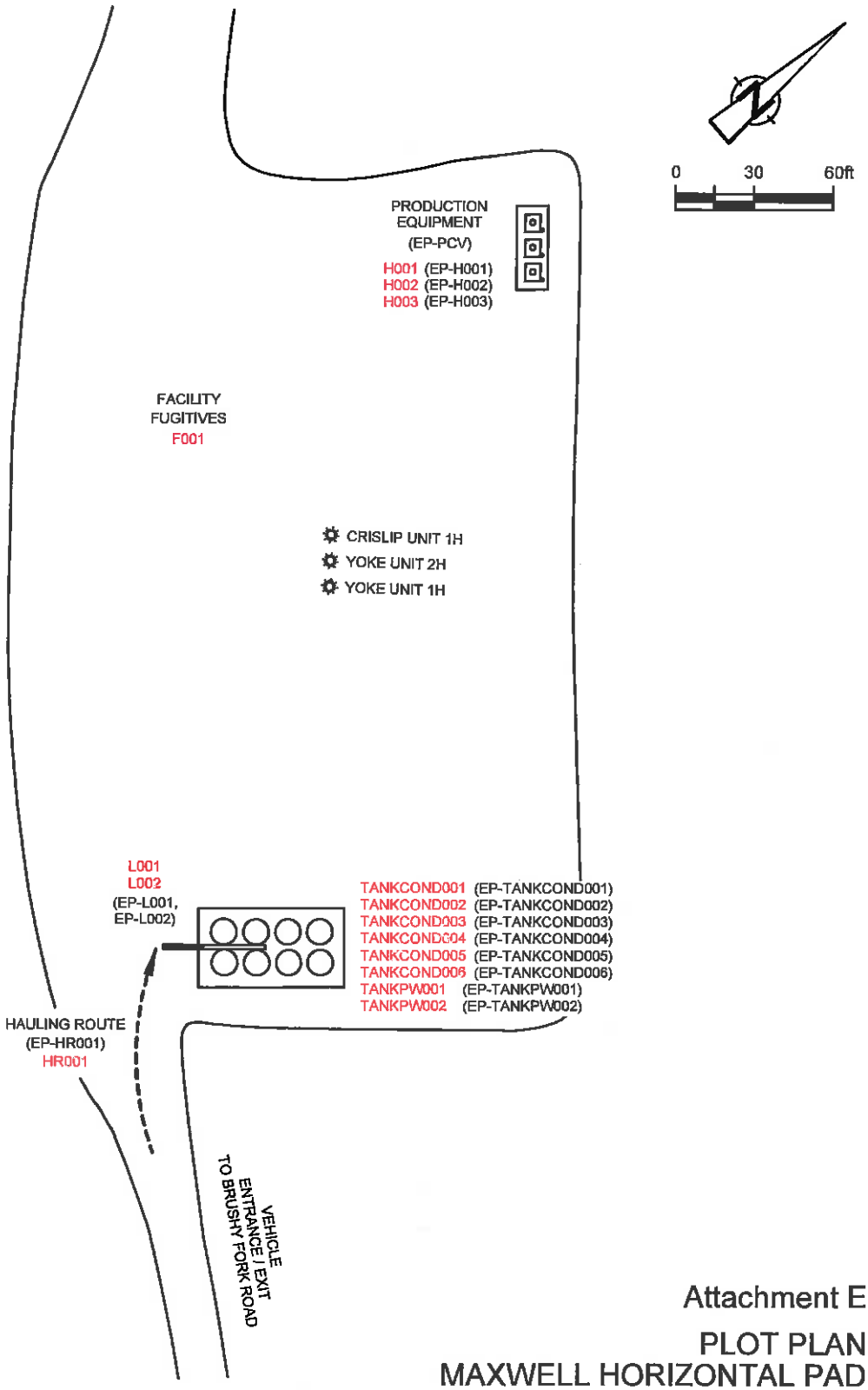

Attachment E

PLOT PLAN
MAXWELL HORIZONTAL PAD
ANTERO RESOURCES
Doddridge County, West Virginia

82715-00(061)GN-WA001 DEC 23/2014

Attachment F

Area Map

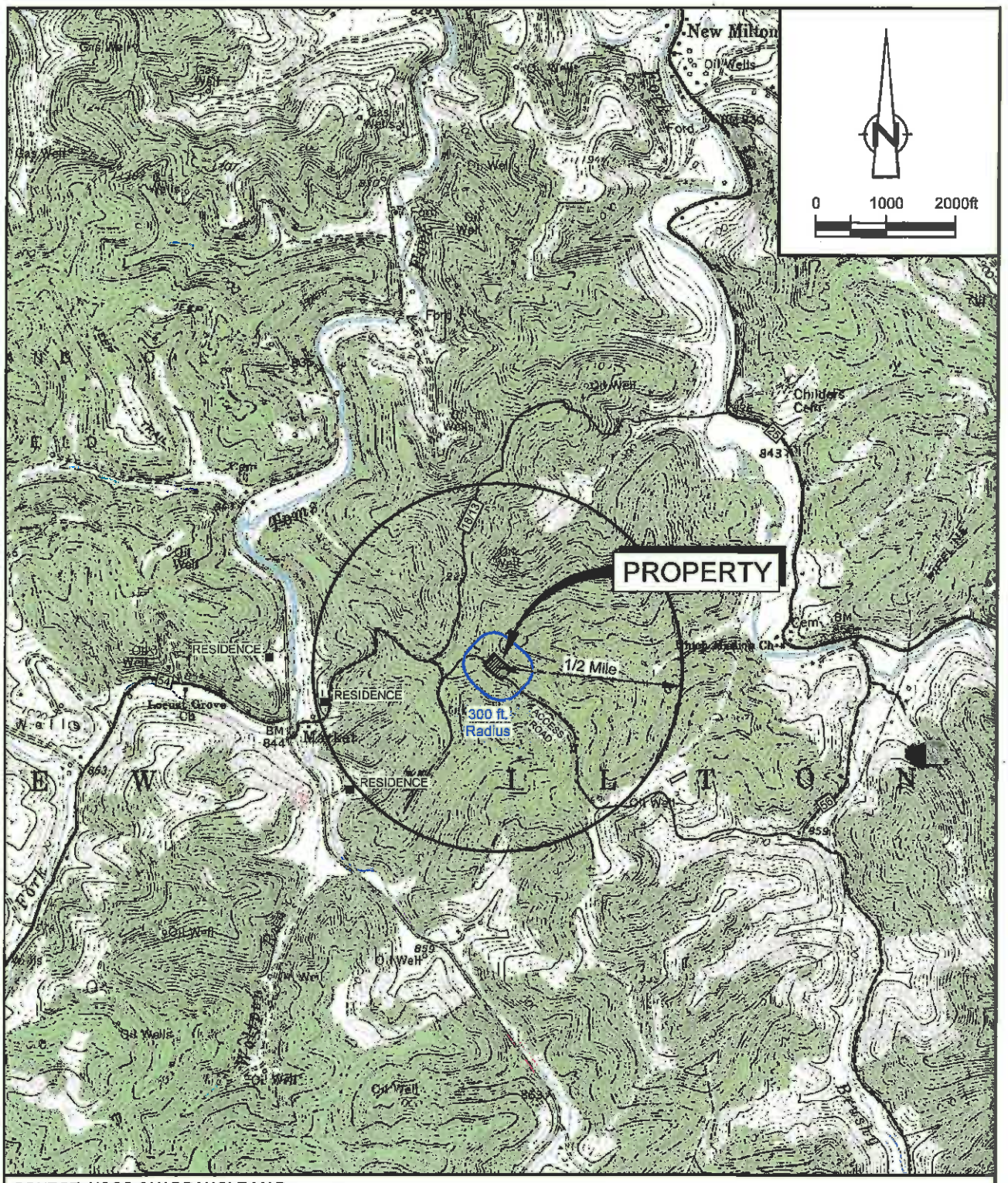

SOURCE: USGS QUADRANGLE MAP;
NEW MILTON, WEST VIRGINIA

SITE COORDINATES: UTM ZONE 17S 526551, 4339886 NAD 83
SITE ELEVATION: 1239 ft AMSL

Attachment F

AREA MAP
MAXWELL HORIZONTAL PAD
ANTERO RESOURCES
Doddridge County, West Virginia

82715-00(061)GN-WA003 DEC 23/2014

Attachment G

Emission Unit Data Sheets/G70-A Section Applicability Form

General Permit G70-A Registration
Section Applicability Form

General Permit G70-A was developed to allow qualified applicants to seek registration for a variety of sources. These sources include natural gas well affected facilities, storage tanks, natural gas-fired compressor engines (RICE), natural gas producing units, natural gas-fired in-line heaters, pneumatic controllers, heater treaters, tank truck loading, glycol dehydration units, completion combustion devices, flares, enclosed combustion devices, and vapor recovery systems. All registered facilities will be subject to Sections 1.0, 2.0, 3.0, and 4.0.

General Permit G70-A allows the registrant to choose which sections of the permit they are seeking registration under. Therefore, please mark which additional sections that you are applying for registration under. If the applicant is seeking registration under multiple sections, please select all that apply. Please keep in mind, that if this registration is approved, the issued registration will state which sections will apply to your affected facility.

Section 5	Natural Gas Well Affected Facility	☑
Section 6	Storage Vessels*	☑
Section 7	Gas Producing Units, In-Line Heaters, Heater Treaters, and Glycol Dehydration Reboilers	☑
Section 8	Pneumatic Controllers Affected Facility (NSPS, Subpart OOOO)	☐
Section 9	*Reserved*	☐
Section 10	Natural gas-fired Compressor Engine(s) (RICE) **	☐
Section 11	Tank Truck Loading Facility ***	☑
Section 12	Standards of Performance for Storage Vessel Affected Facilities (NSPS, Subpart OOOO)	☐
Section 13	Standards of Performance for Stationary Spark Ignition Internal Combustion Engines (NSPS, Subpart JJJJ)	☐
Section 14	Control Devices not subject to NSPS, Subpart OOOO	☐
Section 15	National Emissions Standards for Hazardous Air Pollutants for Stationary Reciprocating Internal Combustion Engines (40CFR63, Subpart ZZZZ)	☐
Section 16	Glycol Dehydration Units	☐
Section 17	Dehydration Units With Exemption from NESHAP Standard, Subpart HH § 63.764(d) (40CFR63, Subpart HH)	☐
Section 18	Dehydration Units Subject to NESHAP Standard, Subpart HH and Not Located Within an UA/UC (40CFR63, Subpart HH)	☐
Section 19	Dehydration Units Subject to NESHAP Standard, Subpart HH and Located Within an UA/UC (40CFR63, Subpart HH)	☐

* *Applicants that are subject to Section 6 may also be subject to Section 12 if the applicant is subject to the NSPS, Subpart OOOO control requirements or the applicable control device requirements of Section 14.*

** *Applicants that are subject to Section 10 may also be subject to the applicable RICE requirements of Section 13 and/or Section 15.*

*** *Applicants that are subject to Section 11 may also be subject to control device requirements of Section 14.*

NATURAL GAS WELL AFFECTED FACILITY DATA SHEET

Complete this data sheet if you are the owner or operator of a gas well affected facility for which construction, modification, or reconstruction commenced after August 23, 2011. This form must be completed for natural gas well affected facilities regardless of when flowback operations occur (or have occurred).

Please provide the API number(s) for each NG well at this facility:	
47017061000000	
47017060970000	
47017060980000	

Note: This is the same API well number(s) provided in the well completion notification and as provided to the WVDEP, Office of Oil and Gas for the well permit. The API number may be provided on the application without the state code (047).

Every oil and gas well permitted in West Virginia since 1929 has been issued an API (American Petroleum Institute) number. This API is used by agencies to identify and track oil and gas wells.

The API number has the following format: 047-001-00001

Where,
047 = State code. The state code for WV is 047.
001 = County Code. County codes are odd numbers, beginning with 001 (Barbour) and continuing to 109 (Wyoming).
00001= Well number. Each well will have a unique well number.

Attachment G: Emission Units Data Sheet

(includes all emission units and air pollution control devices that will be part of this permit application review, regardless of permitting status)

Emission Unit ID1	Emission Point ID2	Emission Unit Description	Year Installed/	Design Capacity	Type3 and Date of Change	Control Device 4
H001, H002, H003	EP-H001, EP-H002, EP-H003	Gas Production Unit Heater	2013	1 MMBtu/hr	N/A	N/A
F001	F001	Fugitives	2013	0	N/A	N/A
TANKCOND001-006	EP-TANKCOND001-006	Condensate Tank F/W/B	2013	400 bbl each	N/A	N/A
TANKPW001-002	EP-TANKPW001-002	PW Tank F/W/B	2013	400 bbl each	N/A	N/A
L001	EP-L001	Loading (Condensate)	2013	200BBL capacity (each)	N/A	N/A
L002	EP-L002	Loading (Water)	2013	200BBL capacity (each)	N/A	N/A
HR001	EP-HR001	Haul Truck	2013	40 ton capacity	N/A	N/A
PCV	EP-PCV	Pneumatic CV	2013	6.6 scf/day/PCV	N/A	N/A

1 For Emission Units (or Sources) use the following numbering system:1S, 2S, 3S,... or other appropriate designation.
2 For Emission Points use the following numbering system:1E, 2E, 3E, ... or other appropriate designation.
3 New, modification, removal.
4 For Control Devices use the following numbering system: 1C, 2C, 3C,... or other appropriate designation.

Attachment G: Storage Vessel Emission Unit Data Sheet (Condensate)

Provide the following information for each new or modified bulk liquid storage tank.

I. GENERAL INFORMATION (required)

1. Bulk Storage Area Name	CONDTANK	2. Tank Name	TANKCOND001-006
3. Emission Unit ID number	TANKCOND001-006	4. Emission Point ID number	EP-TANKCOND001-006
5. Date Installed or Modified *(for existing tanks)*		6. Type of change: N/A	
7A. Description of Tank Modification *(if applicable)*			
7B. Will more than one material be stored in this tank? *If so, a separate form must be completed for each material.* Yes			
7C. Provide any limitations on source operation affecting emissions. (production variation, etc.)			

II. TANK INFORMATION (required)

8. Design Capacity *(specify barrels or gallons)*. Use the internal cross-sectional area multiplied by internal height. 400bbls			
9A. Tank Internal Diameter (ft.) 12		9B. Tank Internal Height (ft.) 20	
10A. Maximum Liquid Height (ft.) 18		10B. Average Liquid Height (ft.) 10	
11A. Maximum Vapor Space Height (ft.) 18		11B. Average Vapor Space Height (ft.) 10	
12. Nominal Capacity *(specify barrels or gallons)*. This is also known as "working volume." 400bbls			
13A. Maximum annual throughput (gal/yr)	20,404	13B. Maximum daily throughput (gal/day)	56
14. Number of tank turnovers per year	1	15. Maximum tank fill rate (gal/min)	168
16. Tank fill method Splash filling			
17. Is the tank system a variable vapor space system? No If yes, (A) What is the volume expansion capacity of the system (gal)? (B) What are the number of transfers into the system per year?			
18. Type of tank (check all that apply): X Fixed Roof X vertical horizontal X flat roof cone roof dome roof other (describe) External Floating Roof pontoon roof double deck roof Domed External (or Covered) Floating Roof Internal Floating Roof vertical column support self-supporting Variable Vapor Space lifter roof diaphragm Pressurized spherical cylindrical Underground Other (describe)			

III. TANK CONSTRUCTION AND OPERATION INFORMATION *(check which one applies)*

Refer to enclosed TANKS Summary Sheets

X Refer to the responses to items 19 – 26 in section VII

IV. SITE INFORMATION *(check which one applies)*

Refer to enclosed TANKS Summary Sheets

X Refer to the responses to items 27 – 33 in section VII

V. LIQUID INFORMATION *(check which one applies)*

Refer to enclosed TANKS Summary Sheets

X Refer to the responses to items 34 – 39 in section VII

Attachment G: Storage Vessel Emission Unit Data Sheet (Condensate)

Provide the following information for each new or modified bulk liquid storage tank.

VI. EMISSIONS AND CONTROL DEVICE DATA (required)

40. Emission Control Devices (check as many as apply):

Does Not Apply — Rupture Disc (psig)

Carbon Adsorption[1] — Inert Gas Blanket of _____

X Vent to Vapor Combustion Device1 (vapor combustors, flares, thermal oxidizers) Condenser[1]

Conservation Vent (psig

Other[1] (describe) — Vacuum Setting — Pressure Setting Emergency Relief Valve (psig)

[1] Complete appropriate Air Pollution Control Device Sheet

41. Expected Emission Rate (submit Test Data or Calculations here or elsewhere in the application).

Material Name and CAS No.	Flashing Loss		Breathing Loss		Working Loss		Total Emissions Loss		
	lb/hr	tpy	lb/hr	tpy	lb/hr	tpy	lb/hr	tpy	
	Please see Tables 6, 7 and 8								

1 EPA = EPA Emission Factor, MB = Material Balance, SS = Similar Source, ST = Similar Source Test, Throughput Data, O = Other (specify)

Remember to attach emissions calculations, including TANKS Summary Sheets and other modeling summary sheets if applicable.

SECTION VII (required if did not provide TANKS Summary Sheets)

TANK CONSTRUCTION AND OPERATION INFORMATION		
19. Tank Shell Construction: Steel		
20A. Shell Color: Green	20B. Roof Color: Green	20C. Year Last Painted: 2013
21. Shell Condition (if metal and unlined): No Rust		
22A. Is the tank heated? No	22B. If yes, operating temperature:	22C. If yes, how is heat provided to tank?
23. Operating Pressure Range (psig): 0		
24. Is the tank a **Vertical Fixed Roof Tank**? Yes	24A. If yes, for dome roof provide radius (ft):	24B. If yes, for cone roof, provide slop (ft/ft):
25. Complete item 25 for **Floating Roof Tanks** Does not apply		
25A. Year Internal Floaters Installed:		
25B. Primary Seal Type *(check one)*: Metallic (mechanical) shoe seal Liquid mounted resilient seal		
25C. Is the Floating Roof equipped with a secondary seal? Yes No		
25D. If yes, how is the secondary seal mounted? *(check one)* Shoe Rim Other (describe):		
25E. Is the floating roof equipped with a weather shield? Yes No		
25F. Describe deck fittings:		
26. Complete the following section for **Internal Floating Roof Tanks** Does not apply		
26A. Deck Type: Bolted Welded	26B. For bolted decks, provide deck construction:	
26C. Deck seam. Continuous sheet construction:		
26D. Deck seam length (ft.):	26E. Area of deck (ft2):	26F. For column supported / 26G. For column supported

Attachment G: Storage Vessel Emission Unit Data Sheet (Condensate)

Provide the following information for each new or modified bulk liquid storage tank.

SITE INFORMATION:			
27. Provide the city and state on which the data in this section are based: Charleston, WV			
28. Daily Avg. Ambient Temperature (°F): 55.3		29. Annual Avg. Maximum Temperature (°F): 73	
30. Annual Avg. Minimum Temperature (°F): 65.9		31. Avg. Wind Speed (mph): 5.9	
32. Annual Avg. Solar Insulation Factor (BTU/ft2-day): 1030.235999		33. Atmospheric Pressure (psia): 14.8	
LIQUID INFORMATION:			
34. Avg. daily temperature range of bulk liquid (°F): 51.7	34A. Minimum (°F): 39.5	34B. Maximum (°F): 63.8	
35. Avg. operating pressure range of tank (psig): 0	35A. Minimum (psig): 0	35B. Maximum (psig): 0	
36A. Minimum liquid surface temperature (°F):39.5		36B. Corresponding vapor pressure (psia):	0.6860
37A. Avg. liquid surface temperature (°F):51.7		37B. Corresponding vapor pressure (psia):	0.9202
38A. Maximum liquid surface temperature (°F): 63.8		38B. Corresponding vapor pressure (psia):	1.2147
39. Provide the following for each liquid or gas to be stored in the tank. Add additional pages if necessary.			
39A. Material name and composition:	Condensate		
39B. CAS number:	mix of HC		
39C. Liquid density (lb/gal):	6.05		
39D. Liquid molecular weight (lb/lb-mole):	113.2000		
39E. Vapor molecular weight (lb/lb-mole):	38.6992		
39F. Maximum true vapor pressure (psia):	1.4589		
39G. Max Reid vapor pressure (psi):	7.62957		
39H. Months Storage per year. From: To:	year round		

Attachment G: Storage Vessel Emission Unit Data Sheet (Produced Water)

Provide the following information for each new or modified bulk liquid storage tank.

I. GENERAL INFORMATION (required)

1. Bulk Storage Area Name	PWTANK	2. Tank Name	TANKPW001-002
3. Emission Unit ID number	TANKPW001-002	4. Emission Point ID number	EP-TANKCOND001-006
5. Date Installed or Modified *(for existing tanks)*		6. Type of change: N/A	
7A. Description of Tank Modification *(if applicable)*			
7B. Will more than one material be stored in this tank? *If so, a separate form must be completed for each material.* Yes			
7C. Provide any limitations on source operation affecting emissions. (production variation, etc.)			

II. TANK INFORMATION (required)

8. Design Capacity *(specify barrels or gallons).* Use the internal cross-sectional area multiplied by internal height. 400bbls			
9A. Tank Internal Diameter (ft.) 12		9B. Tank Internal Height (ft.) 20	
10A. Maximum Liquid Height (ft.) 18		10B. Average Liquid Height (ft.) 10	
11A. Maximum Vapor Space Height (ft.) 18		11B. Average Vapor Space Height (ft.) 10	
12. Nominal Capacity *(specify barrels or gallons)*. This is also known as "working volume." 400bbls			
13A. Maximum annual throughput (gal/yr)	244,851	13B. Maximum daily throughput (gal/day)	671
14. Number of tank turnovers per year	8	15. Maximum tank fill rate (gal/min)	168
16. Tank fill method Splash fill			
17. Is the tank system a variable vapor space system? No If yes, (A) What is the volume expansion capacity of the system (gal)? (B) What are the number of transfers into the system per year?			
18. Type of tank (check all that apply): X Fixed Roof X vertical horizontal X flat roof cone roof dome roof other (describe) External Floating Roof pontoon roof double deck roof Domed External (or Covered) Floating Roof Internal Floating Roof vertical column support self-supporting Variable Vapor Space lifter roof diaphragm Pressurized spherical cylindrical Underground Other (describe)			

III. TANK CONSTRUCTION AND OPERATION INFORMATION *(check which one applies)*

Refer to enclosed TANKS Summary Sheets

X Refer to the responses to items 19 – 26 in section VII

IV. SITE INFORMATION *(check which one applies)*

Refer to enclosed TANKS Summary Sheets

X Refer to the responses to items 27 – 33 in section VII

V. LIQUID INFORMATION *(check which one applies)*

Refer to enclosed TANKS Summary Sheets

X Refer to the responses to items 34 – 39 in section VII

Attachment G: Storage Vessel Emission Unit Data Sheet (Produced Water)

Provide the following information for each new or modified bulk liquid storage tank.

VI. EMISSIONS AND CONTROL DEVICE DATA (required)

40. Emission Control Devices (check as many as apply):

Does Not Apply — Rupture Disc (psig)

Carbon Adsorption[1] — Inert Gas Blanket of _____

X Vent to Vapor Combustion Device1 (vapor combustors, flares, thermal oxidizers) Condenser[1]

Conservation Vent (psig

Other[1] (describe) — Vacuum Setting — Pressure Setting Emergency Relief Valve (psig)

[1] Complete appropriate Air Pollution Control Device Sheet

41. Expected Emission Rate (submit Test Data or Calculations here or elsewhere in the application).

Material Name and CAS No.	Flashing Loss		Breathing Loss		Working Loss		Total Emissions Loss		
	lb/hr	tpy	lb/hr	tpy	lb/hr	tpy	lb/hr	tpy	
	Please see Tables 6, 7 and 8								

1 EPA = EPA Emission Factor, MB = Material Balance, SS = Similar Source, ST = Similar Source Test, Throughput Data, O = Other (specify)

Remember to attach emissions calculations, including TANKS Summary Sheets and other modeling summary sheets if applicable.

SECTION VII (required if did not provide TANKS Summary Sheets)

TANK CONSTRUCTION AND OPERATION INFORMATION		
19. Tank Shell Construction: Steel		
20A. Shell Color: Green	20B. Roof Color: Green	20C. Year Last Painted: 2013
21. Shell Condition (if metal and unlined): No Rust		
22A. Is the tank heated? No	22B. If yes, operating temperature:	22C. If yes, how is heat provided to tank?
23. Operating Pressure Range (psig): 0		
24. Is the tank a **Vertical Fixed Roof Tank**? Yes	24A. If yes, for dome roof provide radius (ft):	24B. If yes, for cone roof, provide slop (ft/ft):
25. Complete item 25 for **Floating Roof Tanks** Does not apply		
25A. Year Internal Floaters Installed:		
25B. Primary Seal Type *(check one)*: Metallic (mechanical) shoe seal Liquid mounted resilient seal		
25C. Is the Floating Roof equipped with a secondary seal? Yes No		
25D. If yes, how is the secondary seal mounted? *(check one)* Shoe Rim Other (describe):		
25E. Is the floating roof equipped with a weather shield? Yes No		
25F. Describe deck fittings:		
26. Complete the following section for **Internal Floating Roof Tanks** Does not apply		
26A. Deck Type: Bolted Welded	26B. For bolted decks, provide deck construction:	
26C. Deck seam. Continuous sheet construction:		
26D. Deck seam length (ft.):	26E. Area of deck (ft2):	26F. For column supported / 26G. For column supported

Attachment G: Storage Vessel Emission Unit Data Sheet (Produced Water)

Provide the following information for each new or modified bulk liquid storage tank.

SITE INFORMATION:			
27. Provide the city and state on which the data in this section are based: Charleston, WV			
28. Daily Avg. Ambient Temperature (°F): 55.3		29. Annual Avg. Maximum Temperature (°F):73	
30. Annual Avg. Minimum Temperature (°F): 65.9		31. Avg. Wind Speed (mph): 5.9	
32. Annual Avg. Solar Insulation Factor (BTU/ft2-day): 1030.235999		33. Atmospheric Pressure (psia): 14.8	
LIQUID INFORMATION:			
34. Avg. daily temperature range of bulk liquid (°F): 51.7	34A. Minimum (°F): 39.5	34B. Maximum (°F): 63.8	
35. Avg. operating pressure range of tank (psig): 0	35A. Minimum (psig): 0	35B. Maximum (psig): 0	
36A. Minimum liquid surface temperature (°F):39.5		36B. Corresponding vapor pressure (psia):	0.1836
37A. Avg. liquid surface temperature (°F):51.7		37B. Corresponding vapor pressure (psia):	0.2594
38A. Maximum liquid surface temperature (°F): 63.8		38B. Corresponding vapor pressure (psia):	0.3597
39. Provide the following for each liquid or gas to be stored in the tank. Add additional pages if necessary.			
39A. Material name and composition:	Produced Water		
39B. CAS number:	mix of HC and water		
39C. Liquid density (lb/gal):	(SG)		
39D. Liquid molecular weight (lb/lb-mole):	18.0156		
39E. Vapor molecular weight (lb/lb-mole):	18.3431		
39F. Maximum true vapor pressure (psia):	0.4464		
39G. Max Reid vapor pressure (psi):	N/A		
39H. Months Storage per year. From: To:	year round		

Attachment G: Natural Gas Fired Fuel Burning Units

Emission Data Sheet

Complete the information on this data for each Gas Producing Unit(s), Heater Treater(s), and in-line heater(s) at the production pad. Reboiler information should be entered on the Glycol Dehydration Emission Unit Data Sheet.

Emission Unit ID #[1]	Emission Point ID#[2]	Emission Unit Description (Manufacturer / Model #)	Year Installed/ Modified	Type[3] and Date of Change	Control Device[4]	Design Heat Input (mmBtu/hr)[5]	Fuel Heating Value (Btu/scf)[6]
H001	EP-H001	Gas Production Unit Heater	2013	N/A	--	1	1,247
H002	EP-H002	Gas Production Unit Heater	2013	N/A	--	1	1,247
H003	EP-H003	Gas Production Unit Heater	2013	N/A	--	1	1,247

1 Enter the appropriate Emission Unit (or Sources) identification numbers for each fuel burning unit located at the production pad. Gas Producing Unit Burners should be designated GPU-1, GPU-2, etc. Heater Treaters should be designated HT-1, HT-2, etc. Heaters or Line Heaters should be designated LH-1, LH-2, etc. For sources, use 1S, 2S, 3S...or other appropriate designation. Enter glycol dehydration unit Reboiler Vent data on the Glycol Dehydration Unit Data Sheet.

2 Enter the appropriate Emission Point identification numbers for each fuel burning unit located at the production pad. Gas Producing Unit Burners should be designated GPU-1, GPU-2, etc. Heater Treaters should be designated HT-1, HT-2, etc. Heaters or Line Heaters should be designated LH-1, LH-2, etc. For emission points, use 1E, 2E, 3E...or other appropriate designation.

3 New, modification, removal.

4 Complete appropriate air pollution control device sheet for any control device.

5 Enter design heat input capacity in mmBtu/hr.

6 Enter the fuel heating value in Btu/standard cubic foot.

Attachment G: Tank Truck Loading

Emissions Unit Data Sheet

Furnish the following information for each new or modified bulk liquid transfer area or loading rack at the natural gas production pad. This form is to be used for bulk liquid transfer operations to tank trucks.

1. Emission Unit ID: L001, L002	2. Emission Point ID: EP-L001, EP-L002	3. Year Installed/ Modified: 2013
4. Emission Unit Description: CONDENSATE AND PRODUCED WATER		
5. Loading Area Data		
5A. Number of pumps: 1	5B. Number of liquids loaded: 1	5C. Maximum number of tank trucks loading at one time: 1

6. Describe cleaning location, compounds and procedure for tank trucks: For hire tank trucks are used and are cleaned at the operator's dispatch terminal. These trucks are in dedicated service and cleaned only prior to repair or leak tests. Cleaning materials include water, steam, detergent, and solvents which are applied using hand held pressurized spray nozzles.

7. Are tank trucks pressure tested for leaks at this or any other location?

X Yes No

If YES, describe: Tank trucks are pressure tested for leaks at the location of the leak testing company. Trucks are tested using EPA Method 27-internal vapor valve test and issued certification that DOT requirements are met.

8. Projected Maximum Operating Schedule (for rack or transfer point as a whole):

Maximum	Jan. - Mar.	Apr. - June	July - Sept.	Oct. - Dec.
hours/day	1	1	1	1
days/week	1	1	1	1

9. Bulk Liquid Data *(add pages as necessary)*

Liquid Name		Condensate	Produced Water	
Max. daily throughput (1000 gal/day)		0.06	0.67	
Max. annual throughput (1000 gal/yr)		20.40	244.85	
Loading Method [1]		BF	BF	
Max. Fill Rate (gal/min)		168	168	
Average Fill Time (min/loading)		50	50	
Max. Bulk Liquid Temperature (°F)		72.1	72.1	
True Vapor Pressure [2]		1.46	0.45	
Cargo Vessel Condition [3]		U	U	
Control Equipment or Method [4]		None	None	
Minimum collection efficiency (%)		100	100	
Minimum control efficiency (%)		0	0	
Maximum Emission Rate	Loading (lb/hr)	8.00	1.16	
	Annual (ton/yr)	0.01	0.01	
Estimation Method [5]		ProMax/ AP-42	ProMax/AP-42	

Notes:

1 BF = Bottom Fill SP = Splash Fill SUB = Submerged Fill

2 At maximum bulk liquid temperature

Attachment G: Tank Truck Loading

Emissions Unit Data Sheet

Furnish the following information for each new or modified bulk liquid transfer area or loading rack at the natural gas production pad. This form is to be used for bulk liquid transfer operations to tank trucks.

3 B = Ballasted Vessel, C = Cleaned, U = Uncleaned (dedicated service), O = other (describe)	
4 List as many as apply (complete and submit appropriate *Air Pollution Control Device Sheets as Attachment "H"*): CA = Carbon Adsorption VB = Dedicated Vapor Balance (closed system) ECD = Enclosed Combustion Device F = Flare TO = Thermal Oxidation or Incineration	
5 EPA = EPA Emission Factor as stated in AP-42	
10. **Proposed Monitoring, Recordkeeping, Reporting, and Testing**	
MONITORING 1) Visual inspection to ensure that loading connections from storage tanks to trucks are leak-free.	RECORDKEEPING 1) Maintain records of condensate transferred from storage tanks. 2) Maintain records of produced water transferred from storage tanks.
REPORTING N/A	TESTING N/A
11. Describe all operating ranges and maintenance procedures required by Manufacturer to maintain warranty: N/A	

Attachment I

Emission Calculations

Table 1

Facility Information
Maxwell Horizontal Pad
Doddridge County, West Virginia
Antero Resources Corporation

Oil and Gas Site General Information	
Administrative Information	
Company Name	Antero Resources Corporation
Facility/Well Name	Maxwell Horizontal Pad
Nearest City/Town	New Milton
API Number/SIC Code	1311
Latitude/Longitude	39.207694,-80.692583
County	Doddridge County

Technical Information	
Max Condensate Site Throughput (bbl/day):	1.331
Max Produced Water Site Throughput (bbl/day):	15.972
Are there any sour gas streams at this site?	No
Is this site currently operational/producing?	Yes

Equipment/Processes at Site	
Equipment/Process Types	**How many for this site?**
Fugitives	3
IC Engines	0
Turbines	0
Diesel Engines	0
Gas Production Unit Heaters	3
Condensate Tanks	6
Produced Water Tanks	2
Miscellaneous Tanks	0
Loading Jobs	2
Glycol Units	0
Amine Units	0
Flares-Vapor Combustors	0

Table 3

Permits Summary
Maxwell Horizontal Pad
Doddridge County, West Virginia
Antero Resources Corporation

Pollutant		Emissions			Threshold Exceeded?
		Uncontrolled	Controlled	Threshold	Uncontrolled
VOC	lbs/hr	2.9858		6	
	tons/yr	13.0822		10	**Yes**
NO_x	lbs/hr	0.2406		6	
	tons/yr	1.0537		10	
CO	lbs/hr	0.2021		6	
	tons/yr	0.8851		10	
SO_2	lbs/hr	0.0014		6	
	tons/yr	0.0063		10	
$PM_{2.5}$	lbs/hr	0.0183		6	
	tons/yr	0.0801		10	
PM_{10}	lbs/hr	0.9303	0.4743	6	
	tons/yr	0.1065	0.0933	10	
Lead	lbs/hr	1.20E-06		6	
	tons/yr	5.27E-06		10	
Total HAPs	lbs/hr	0.1089		2	
	tons/yr	0.4770		5	
Total TAPs	lbs/hr	0.0008		1.14	
n-Hexane	lbs/hr	0.0815			
	tons/yr	0.3568			
Toluene	lbs/hr	0.0038			
	tons/yr	0.0165			
Ethylbenzene	lbs/hr	0.0066			
	tons/yr	0.0290			
Xylenes	lbs/hr	0.0162			
	tons/yr	0.0711			
Benzene	lbs/hr	0.0006			
	tons/yr	0.0026			

Enter any notes here:	1. Emissions are vented to the atmosphere

Table 4

Fugitive Emissions
Maxwell Horizontal Pad
Doddridge County, West Virginia
Antero Resources Corporation

VOC Type:	Condensate VOC
Emission Type:	Steady State (continuous)

Gas Weight Fraction From Analysis	VOC frac	0.191
	Benzene frac	0.00
	Toluene	0.00
	Ethylbenzene	0.000
	Xylenes	0.000
	n-hexane	0.023
	Methane	0.603

Gas					
Number	Component	Pollutant	Emission Factor (kg/hr of THC per component)	kg/hr	lb/yr
150	Valves	Gas VOC	0.004500	0.13	2,484.03
		Non VOC	0.004500	0.55	10,524.57
177	Connectors	VOC	0.000200	0.01	130.27
		Non-VOC	0.000200	0.03	551.96
39	Flanges	VOC	0.000390	0.00	55.97
		Non-VOC	0.000390	0.01	237.15
			Total VOCs:	0.14	2,670.28
			Total THC:	0.73	13,983.96

Light Liquid Weight Fraction From Analysis	VOC frac	0.952
	Benzene frac	0.000
	Toluene	0.003
	Ethylbenzene	0.007
	Xylenes	0.017
	n-hexane	0.024
	Methane	0.018

Light Liquid					
Number	Component	Pollutant	Emission Factor (kg/hr of THC per component)	kg/hr	lb/yr
156	Valves	Light Liquid VOC	0.002500	0.37	7,153.18
		Light Liquid Non-VOC		0.02	362.90
			Total VOC:	0.37	7,153.18
			Total THC:	0.39	7,516.08

Fugitive Total Emissions			
	Annual Emissions (lb/yr)	Annual Emissions (lb/hr)	Annual Emissions (tpy)
VOC	9,823.46	1.12	4.91
Ethylbenzene		0.01	0.03
Toluene		0.00	0.01
Xylenes		0.01	0.06
n-Hexane		0.06	0.25
TAPs (Benzene)		0.00	0.00
HAPs		0.08	0.35
CO_{2e}	179,875.56	20.53	89.94

Enter Notes Here:	Fugitive emissions based on an estimated component count Global Warming Potentials from EPA site Reference to Emission factors used: 1. Emission factors are for oil and gas production facilities (not refineries) come from the EPA's "Protocol for Equipment Leak Emission Estimates" November 1995, EPA 4531, R-95-017, Table 2-4. 2. Percent of speciated VOCs used in fugitive calculations are based on the total hydrocarbons, not of the total sample.

Table 5

Pneumatic Control Valve Emissions
Maxwell Horizontal Pad
Doddridge County, West Virginia
Antero Resources Corporation

Number of PCVs	15
Bleed Rate (scf/day/PCV)	6.6
Total Bleed Rate (scf/day)	99

Component	Mol%	Molecular Weight (lb/lb-mole)	Component Flow (scf/day)	Component Moles (lb-moles)	Component Emissions (lbs/day)	(lbs/hr)	(tons/year)
H2S	0	34.08	0	0.00	0.00	0.00	0.00
Nitrogen	0.4946	14.01	0.489654	0.00	0.02	0.00	0.00
Carbon Dioxide	0.1467	44.01	0.145233	0.00	0.02	0.00	0.00
Methane	77.6927	16.04	76.915773	0.20	3.25	0.14	0.59
Ethane	14.1987	30.07	14.056713	0.04	1.11	0.05	
Propane	4.4938	44.1	4.448862	0.01	0.52	0.02	0.09
Isobutane	0.5666	58.12	0.560934	0.00	0.09	0.00	0.02
n-Butane	1.1838	58.12	1.171962	0.00	0.18	0.01	0.03
Isopentane	0.3749	72.15	0.371151	0.00	0.07	0.00	0.01
n-Pentane	0.2914	72.15	0.288486	0.00	0.05	0.00	0.01
2-Methylpentane	0	86.18	0	0.00	0.00	0.00	0.00
3-Methylpentane	0	86.18	0	0.00	0.00	0.00	0.00
n-Hexane	0.5451	86.18	0.539649	0.00	0.12	0.01	0.02
Methylcyclopentane	0	84.16	0	0.00	0.00	0.00	0.00
Benzene	0	78.11	0	0.00	0.00	0.00	0.00
2-Methylhexane	0	100.2	0	0.00	0.00	0.00	0.00
3-Methylhexane	0	100.2	0	0.00	0.00	0.00	0.00
Heptane	0	100.21	0	0.00	0.00	0.00	0.00
Methylcyclohexane	0	98.186	0	0.00	0.00	0.00	0.00
Toluene	0	92.14	0	0.00	0.00	0.00	0.00
Octane	0	114.23	0	0.00	0.00	0.00	0.00
Ethylbenzene	0	106.17	0	0.00	0.00	0.00	0.00
m & p-Xylene	0	106.16	0	0.00	0.00	0.00	0.00
o-Xylene	0	106.16	0	0.00	0.00	0.00	0.00
Nonane	0	128.2		0.00	0.00	0.00	0.00
C10+	0	174.28	0	0.00	0.00	0.00	0.00

	lb/hr	tpy
VOC Emissions	0.0429	0.1880
Benzene Emissions	0.0000	0.0000
Toluene Emissions	0.0000	0.0000
Ethylbenzene Emissions	0.0000	0.0000
Xylene Emissions	0.0000	0.0000
n-Hexane Emissions	0.0051	0.0224
HAPs Emissions	0.0051	0.0224
TAPs Emissions	0.0000	0.0000
CO_{2e} emissions	2.8454	12.4629

Enter any notes here	PCV bleed rate obtained from the user manual for PCV http://issuu.com/rmcprocesscontrols/docs/mizer-pilot-operation--parts---installation-manual

Table 6

Uncontrolled Flashing Emissions
Maxwell Horizontal Pad
Doddridge County, West Virginia
Antero Resources Corporation

# Hours Operational	8760

	Condensate Tank Flashing Losses			Produced Water Tank Flashing Losses		
	Vapor Mass Fraction	Flashing Losses		Vapor Mass Fraction	Flashing Losses	
	wt%	lbs/hr	tpy	wt%	lbs/hr	tpy
Water	0.1851	0.0014	0.0062	2.7504	0.0000	0.0000
H2S	0.0000	0.0000	0.0000	0.0000	0.0000	0.0000
Nitrogen	0.0627	0.0005	0.0021	0.3991	0.0004	0.0016
Carbon Dioxide	0.2405	0.0018	0.0081	2.2485	0.0020	0.0087
Methane	15.6095	0.1194	0.5228	62.4353	0.0554	0.2427
Ethane	27.1181	0.2074	0.9083	21.1284	0.0187	0.0821
Propane	25.0119	0.1913	0.8377	7.9259	0.0070	0.0308
Isobutane	6.1375	0.0469	0.2056	0.4298	0.0004	0.0017
n-Butane	10.9425	0.0837	0.3665	1.4090	0.0013	0.0055
Isopentane	4.3383	0.0332	0.1453	0.3196	0.0003	0.0012
n-Pentane	3.0462	0.0233	0.1020	0.2098	0.0002	0.0008
2-Methylpentane	1.1860	0.0091	0.0397	0.0361	0.0000	0.0001
3-Methylpentane	0.7473	0.0057	0.0250	0.0603	0.0001	0.0002
n-Hexane	1.6941	0.0130	0.0567	0.0405	0.0000	0.0002
Methylcyclopentane	0.1213	0.0009	0.0041	0.0282	0.0000	0.0001
Benzene	0.0282	0.0002	0.0009	0.0385	0.0000	0.0001
2-Methylhexane	0.4950	0.0038	0.0166	0.0132	0.0000	0.0001
3-Methylhexane	0.3932	0.0030	0.0132	0.0109	0.0000	0.0000
Heptane	0.6375	0.0049	0.0214	0.0187	0.0000	0.0001
Methylcyclohexane	0.3735	0.0029	0.0125	0.0565	0.0001	0.0002
Toluene	0.0751	0.0006	0.0025	0.0958	0.0001	0.0004
Octane	0.6771	0.0052	0.0227	0.0115	0.0000	0.0000
Ethylbenzene	0.0521	0.0004	0.0017	0.0658	0.0001	0.0003
m & p-Xylene	0.0364	0.0003	0.0012	0.0454	0.0000	0.0002
o-Xylene	0.0648	0.0005	0.0022	0.0831	0.0001	0.0003
Nonane	0.2281	0.0017	0.0076	0.0060	0.0000	0.0000
C10+	0.4970	0.0038	0.0166	0.1337	0.0001	0.0005
Total VOCs	56.7842	0.4342	1.9019	11.0384	0.0098	0.0429
Total CO_{2e}		2.5084	10.9870		1.1655	5.1047
Total TAPs (Benzene)		0.0002	0.0009		3.42E-05	1.50E-04
Toluene		0.0006	0.0025		8.50E-05	3.72E-04
Ethylbenzene		0.0004	0.0017		5.84E-05	2.56E-04
Xylenes		0.0008	0.0034		1.14E-04	5.00E-04
n-Hexane		0.0130	0.0567		3.59E-05	1.57E-04
Total HAPs		0.0149	0.0653		0.0003	0.0014
Total	100.0000	0.7647	3.3493	100.0000	0.0863	0.3780

Enter any notes here:	Vapor mass fractions and Flashing losses from Promax output

Table 7

Uncontrolled Working and Breathing Emissions
Maxwell Horizontal Pad
Doddridge County, West Virginia
Antero Resources Corporation

Condensate Tank Information	
Number of Tanks	6
Maximum Working Losses (lbs/hr)	0.0214
Maximum Breathing Losses (lbs/hr)	2.2813

	Condensate Tank W/B Losses						
	Vapor Mass Fraction	Working Losses		Breathing Losses		Max W/B Losses	
	wt%	lbs/hr	tpy	lbs/hr	tpy	lbs/hr	tpy
H2S	0.0000	0.0000	0.0000	0.0000	0.0000	0.0000	
Nitrogen	0.0030	0.0000	0.0000	0.0001	0.0003	0.0001	0.0003
Carbon Dioxide	0.3188	0.0001	0.0003	0.0073	0.0319	0.0073	0.0322
Methane	3.7440	0.0008	0.0035	0.0854	0.3741	0.0862	0.3776
Ethane	36.6897	0.0079	0.0344	0.8370	3.6661	0.8449	3.7005
Propane	29.1156	0.0062	0.0273	0.6642	2.9093	0.6705	2.9366
Isobutane	6.5900	0.0014	0.0062	0.1503	0.6585	0.1518	0.6647
n-Butane	11.6653	0.0025	0.0109	0.2661	1.1656	0.2686	1.1766
Isopentane	4.3673	0.0009	0.0041	0.0996	0.4364	0.1006	0.4405
n-Pentane	3.0393	0.0007	0.0029	0.0693	0.3037	0.0700	0.3065
2-Methylpentane	1.1417	0.0002	0.0011	0.0260	0.1141	0.0263	0.1152
3-Methylpentane	0.7223	0.0002	0.0007	0.0165	0.0722	0.0166	0.0729
n-Hexane	0.1112	0.0000	0.0001	0.0025	0.0111	0.0026	0.0112
Methylcyclopentane	0.1134	0.0000	0.0001	0.0026	0.0113	0.0026	0.0114
Benzene	0.0017	0.0000	0.0000	0.0000	0.0002	0.0000	0.0002
2-Methylhexane	0.0306	0.0000	0.0000	0.0007	0.0031	0.0007	0.0031
3-Methylhexane	0.3671	0.0001	0.0003	0.0084	0.0367	0.0085	0.0370
Heptane	0.5478	0.0001	0.0005	0.0125	0.0547	0.0126	0.0553
Methylcyclohexane	0.3356	0.0001	0.0003	0.0077	0.0335	0.0077	0.0339
Toluene	0.0097	0.0000	0.0000	0.0002	0.0010	0.0002	0.0010
Octane	0.5465	0.0001		0.0125	0.0546	0.0126	0.0546
Ethylbenzene	0.0125	0.0000	0.0000	0.0003	0.0012	0.0003	0.0013
m & p-Xylene	0.0113	0.0000	0.0000	0.0003	0.0011	0.0003	0.0011
o-Xylene	0.0175	0.0000	0.0000	0.0004	0.0017	0.0004	0.0018
Nonane	0.1648	0.0000	0.0002	0.0038	0.0165	0.0038	0.0166
C10+	0.3332	0.0001	0.0003	0.0076	0.0333	0.0077	0.0336
Total VOCs	59.2443	0.0127	0.0551	1.3516	5.9198	1.3642	5.9749
Total CO_{2e}		0.0169	0.0741	1.8009	7.8882	1.8179	7.9622
Total TAPs (Benzene)		0.0000	0.0000	0.0000	0.0002	0.0000	0.0002
Toluene		0.0000	0.0000	0.0002	0.0010	0.0002	0.0010
Ethylbenzene		0.0000	0.0000	0.0003	0.0012	0.0003	0.0013
Xylenes		0.0000	0.0000	0.0007	0.0029	0.0007	0.0029
n-Hexane		0.0000	0.0001	0.0025	0.0111	0.0026	0.0112
Total HAPs		0.0000	0.0002	0.0037	0.0164	0.0038	0.0165
Total	100.0000	0.0214	0.0933	2.2813	9.9922	2.3027	10.0855

Table 7

Uncontrolled Working and Breathing Emissions
Maxwell Horizontal Pad
Doddridge County, West Virginia
Antero Resources Corporation

Produced Water Tank Information	
Number of Tanks	2
Maximum Working Losses (lbs/hr)	0.0040
Maximum Breathing Losses (lbs/hr)	0.0082

	Produced Water Tank W/B Losses						
	Vapor Mass Fraction	Working Losses		Breathing Losses		Max W/B Losses	
	wt%	lbs/hr	tpy	lbs/hr	tpy	lbs/hr	tpy
Water	92.6131	0.0037	0.0161	0.0076	0.0334	0.0113	0.0495
H2S	0.0000	0.0000	0.0000	0.0000	0.0000	0.0000	0.0000
Nitrogen	0.0077	0.0000	0.0000	0.0000	0.0000	0.0000	0.0000
Carbon Dioxide	2.9086	0.0001	0.0005	0.0002	0.0010	0.0004	0.0016
Methane	3.3309	0.0001	0.0006	0.0003	0.0012	0.0004	0.0018
Ethane	1.0403	0.0000	0.0002	0.0001	0.0004	0.0001	0.0006
Propane	0.0951	0.0000	0.0000	0.0000	0.0000	0.0000	0.0001
Isobutane	0.0006	0.0000	0.0000	0.0000	0.0000	0.0000	0.0000
n-Butane	0.0032	0.0000	0.0000	0.0000	0.0000	0.0000	0.0000
Isopentane	0.0002	0.0000	0.0000	0.0000	0.0000	0.0000	0.0000
n-Pentane	0.0001	0.0000	0.0000	0.0000	0.0000	0.0000	0.0000
2-Methylpentane	0.0000	0.0000	0.0000	0.0000	0.0000	0.0000	0.0000
3-Methylpentane	0.0000	0.0000	0.0000	0.0000	0.0000	0.0000	0.0000
n-Hexane	0.0000	0.0000	0.0000	0.0000	0.0000	0.0000	0.0000
Methylcyclopentane	0.0000	0.0000	0.0000	0.0000	0.0000	0.0000	0.0000
Benzene	0.0000	0.0000	0.0000	0.0000	0.0000	0.0000	0.0000
2-Methylhexane	0.0000	0.0000	0.0000	0.0000	0.0000	0.0000	0.0000
3-Methylhexane	0.0000	0.0000	0.0000	0.0000	0.0000	0.0000	0.0000
Heptane	0.0000	0.0000	0.0000	0.0000	0.0000	0.0000	0.0000
Methylcyclohexane	0.0000	0.0000	0.0000	0.0000	0.0000	0.0000	0.0000
Toluene	0.0001	0.0000	0.0000	0.0000	0.0000	0.0000	0.0000
Octane	0.0000	0.0000	0.0000	0.0000	0.0000	0.0000	0.0000
Ethylbenzene	0.0000	0.0000	0.0000	0.0000	0.0000	0.0000	0.0000
m & p-Xylene	0.0000	0.0000	0.0000	0.0000	0.0000	0.0000	0.0000
o-Xylene	0.0000	0.0000	0.0000	0.0000	0.0000	0.0000	0.0000
Nonane	0.0000	0.0000	0.0000	0.0000	0.0000	0.0000	0.0000
C10+	0.0000	0.0000	0.0000	0.0000	0.0000	0.0000	0.0000
Total VOCs	0.0994	0.0000	0.0000	0.0000	0.0000	0.0000	0.0001
Total CO_{2e}		0.0029	0.0127	0.0060	0.0262	0.0089	0.0389
Total TAPs (Benzene)		0.0000	0.0000	0.0000	0.0000	0.0000	0.0000
Toluene		0.0000	0.0000	0.0000	0.0000	0.0000	0.0000
Ethylbenzene		0.0000	0.0000	0.0000	0.0000	0.0000	0.0000
Xylenes		0.0000	0.0000	0.0000	0.0000	0.0000	0.0000
n-Hexane		0.0000	0.0000	0.0000	0.0000	0.0000	0.0000
Total HAPs		0.0000	0.0000	0.0000	0.0000	0.0000	0.0000
Total	100.0000	0.0040	0.0174	0.0082	0.0360	0.0122	0.0534

Enter any notes here:	Vapor mass fractions, working losses and breathing losses from ProMax output

Table 8

Loading Emissions
Maxwell Horizontal Pad
Doddridge County, West Virginia
Antero Resources Corporation

Annual Loading	Oil Truck Loading	Water Truck Loading
RVP	2.51	1.0227
Annual Average Temp (F)	72.1	72.1
S (saturation factor)	0.6	0.6
P (true vapor pressure)	1.46	0.45
M (MW of vapor)	38.70	18.34
Collection Efficiency (%)	0	0
Loading Loss (lb/10^3 gal)*	0.79	0.12
Maximum Throughput (gallons/hr)	10,080	10,080
Average Throughput (gallons/yr)	20,404	244,851
Loading Emissions (lbs/hr)	8.00	1.16
Loading Emissions (tpy)	0.01	0.01

	Condensate Tank Loading Losses			Produced Water Tank Loading Losses		
	Vapor Mass Fraction	Loading Losses		Vapor Mass Fraction	Loading Losses	
	wt%	lbs/hr	tpy	wt%	lbs/hr	tpy
Water	0.0001	1.01E-05	1.02E-08	92.61	1.0746	0.0131
H2S	0.0000	0.00	0.00	0.0000	0.0000	0.0000
Nitrogen	0.0030	2.41E-04	2.44E-07	0.0077	8.89E-05	1.08E-06
Carbon Dioxide	0.3188	2.55E-02	2.58E-05	2.9086	3.37E-02	4.10E-04
Methane	3.7440	3.00E-01	3.03E-04	3.3309	3.86E-02	4.69E-04
Ethane	36.6897	2.94E+00	2.97E-03	1.0403	1.21E-02	1.47E-04
Propane	29.1156	2.33E+00	2.36E-03	0.0951	1.10E-03	1.34E-05
Isobutane	6.5900	5.27E-01	5.34E-04	0.0006	7.50E-06	9.10E-08
n-Butane	11.6653	9.33E-01	9.45E-04	0.0032	3.70E-05	4.49E-07
Isopentane	4.3673	3.49E-01	3.54E-04	0.0002	2.10E-06	2.55E-08
n-Pentane	3.0393	2.43E-01	2.46E-04	0.0001	1.01E-06	1.22E-08
2-Methylpentane	1.1417	9.13E-02	9.25E-05	0.0000	3.30E-08	4.01E-10
3-Methylpentane	0.7223	5.78E-02	5.85E-05	0.0000	1.34E-07	1.63E-09
n-Hexane	0.1112	8.89E-03	9.00E-06	0.0000	1.44E-09	1.74E-11
Methylcyclopentane	0.1134	9.07E-03		0.0000	1.35E-07	1.64E-09
Benzene	0.0017	1.37E-04	1.39E-07	0.0000	5.65E-07	6.86E-09
2-Methylhexane	0.0306	2.44E-03	2.47E-06	0.0000	1.98E-10	2.41E-12
3-Methylhexane	0.3671	2.94E-02	2.97E-05	0.0000	2.46E-09	2.98E-11
Heptane	0.5478	4.38E-02	4.44E-05	0.0000	3.08E-09	3.75E-11
Methylcyclohexane	0.3356	2.69E-02	2.72E-05	0.0000	5.76E-08	7.00E-10
Toluene	0.0097	7.75E-04	7.84E-07	0.0001	6.76E-07	8.21E-09
Octane	0.5465	4.37E-02	4.43E-05	0.0000	3.71E-10	4.51E-12
Ethylbenzene	0.0125	9.98E-04	1.01E-06	0.0000	2.61E-07	3.17E-09
m & p-Xylene	0.0113	9.00E-04	9.11E-07	0.0000	2.01E-07	2.45E-09
o-Xylene	0.0175	1.40E-03	1.42E-06	0.0000	3.85E-07	4.68E-09
Nonane	0.1648	1.32E-02	1.33E-05	0.0000	9.10E-11	1.11E-12
C10+	0.3332	2.67E-02	2.70E-05	0.0000	8.17E-09	9.92E-11
Total VOCs	59.2443	4.74	0.0048	0.0994	1.15E-03	1.40E-05
Total CO_{2e}		6.3162	0.0064		0.8454	0.0103
Total TAPs (Benzene)		0.0001	0.0000		0.0000	0.0000
Toluene		0.0008	0.0000		0.0000	0.0000
Ethylbenzene		0.0010	0.0000		0.0000	0.0000
Xylenes		0.0023	0.0000		0.0000	0.0000
n-Hexane		0.0089	0.0000		0.0000	0.0000
Total HAPs		0.0131	0.0000		0.0000	0.0000
Total	100.0000	8.0010	0.0081	100.0000	1.1603	0.0141

Enter any notes here

Vapor mass fractions and loading losses from Promax output
Using equation L_L = 12.46 SPM/T from AP-42, Chapter 5, Section 5.2-4
RVP and MW were obtained by Promax
Annual Average Temp (F) obtained from Charleston, WV (preset in Promax)
S (saturation factor) is based on submerged loading, dedicated service as it was most representative
True vapor pressure (TVP) equation from AP-42, Chapter 7, Figure 7.1-13b

Table 9

Gas Production Unit Heater Emissions
Maxwell Horizontal Pad
Doddridge County, West Virginia
Antero Resources Corporation

Number of Units	3
GPU Heater Rating (MMBtu/hr)	1
Operating hours/year	8760
Fuel Heat Value (Btu/scf)	1,247

Pollutant	Emission Factors (lb/MMscf)	lb/hr	tpy
NOx	100	0.241	1.054
CO	84	0.202	0.885
CO_2	120,000	288.679	1,264.4
Lead	0.0005	1.20E-06	5.27E-06
N_2O	2.2	0.005	0.023
PM (Total)	7.6	0.018	0.080
SO_2	0.6	0.001	0.006
TOC	11	0.026	0.116
Methane	2.3	0.006	0.024
VOC	5.5	0.013	0.058
HAPS			
2-Methylnaphthalene	2.40E-05	5.77E-08	2.53E-07
Benzene	2.10E-03	5.05E-06	2.21E-05
Dichlorobenzene	1.20E-03	2.89E-06	1.26E-05
Fluoranthene	3.00E-06	7.22E-09	3.16E-08
Fluorene	2.80E-06	6.74E-09	2.95E-08
Formaldehyde	7.50E-02	1.80E-04	7.90E-04
Hexane	1.80E+00	4.33E-03	1.90E-02
Naphthalene	6.10E-04	1.47E-06	6.43E-06
Phenanathrene	1.70E-05	4.09E-08	1.79E-07
Toluene	3.40E-03	8.18E-06	3.58E-05

	lb/hr	tpy
TOTAL Uncontrolled VOC	0.013	0.058
TOTAL Uncontrolled HAPs	0.005	0.020
TOTAL Uncontrolled TAPs (Benzene)	0.000	0.000
TOTAL Uncontrolled TAPs (Formaldehyde)	0.000	0.001
TOTAL CO_{2e} Emissions	290.44	1,272.11

Enter any notes here:
All Emission Factors based off AP-42 Sec 1.4 Natural Gas Combustion

Table 10

Haul Roads Emissions
Maxwell Horizontal Pad
Doddridge County, West Virginia
Antero Resources Corporation

	PM	PM10
Particle Size Multiplier (k)	0.8	0.36
Silt Content of Road Surface Material (s) (%)	5.1	5.1
Days per Year with Precipitation > 0.01 in (p)	150	150
Control Efficiency for Watering [1] (%)	50	50

Tanker Truck Trip Calculation	
Condensate Production (bbl/day)	1.331
PW Production (bbl/day)	16
Truck Capacity (bbl)	200

Pick Up Truck Trip Calculation	
Number of trips per day	2
Trips Per Year	730

	# of Wheels	Mean Vehicle Weight (W) (tons)	Mean Vehicle Speed (S) (mph)	Miles Per Trip (miles)	Maximum Trips per Hour	Maximum Trips per Year	Vehicle Miles Travelled (miles/hr)	Vehicle Miles Travelled (miles/year)	PM (lbs/VMT)	PM10 (lbs/VMT)
Tanker Trucks Condensate	10	40	10	0.2500	1	3	0.2500	0.7500	3.8175	1.7179
Tanker Trucks PW	10	40	10	0.2500	1	30	0.2500	7.5000	3.8175	1.7179
Pick Up Truck	4	3	10	0.3400	1	730	0.3400	248.2000	0.3467	0.1560

	Uncontrolled Emissions						Controlled Emissions					
	PM			PM10			PM			PM10		
	(lbs/hr)	(lbs/year)	(tpy)	(lbs/hr)	(lbs/year)	(tpy)	(lbs/hr)	(lbs/year)	(tpy)	(lbs/hr)	(lbs/year)	(tpy)
Tanker Trucks Condensate	0.9544	2.8631	0.0014	0.4295	1.2884	0.0006	0.4772	1.4316	0.0007	0.2147	0.6442	0.0003
Tanker Trucks PW	0.9544	28.6315	0.0143	0.4295	12.8842	0.0064	0.4772	14.3157	0.0072	0.2147	6.4421	0.0032
Pick Up Truck	0.1179	86.0459	0.0430	0.0530	38.7207	0.0194	0.0589	43.0229	0.0215	0.0265	19.3603	0.0097
Total Emissions	2.0266	117.5405	0.0588	0.9120	52.8932	0.0264	1.0133	58.7703	0.0294	0.4560	26.4466	0.0132

Enter any notes here:	1 EPA, AP-42, Volume I, Section 13.2.2 Unpaved Roads (11/06); assume 2:1 moisture ratio Section 13.2.2 Unpaved Roads (11/06) Source: Attachment L, Fugitive Emissions from Unpaved Haul Roads, Rev 03/2007, West Virginia Department of Environmental Protection

Table 11

Change in Regulated Air Pollutants Emissions
Maxwell Horizontal Pad
Doddridge County, West Virginia
Antero Resources Corporation

	Potential Emissions [1]		Initial Permit Application Emissions		Change in Emissions	
Pollutant	**Hourly PTE**	**Yearly PTE**	**Hourly PTE**	**Yearly PTE**	**Hourly PTE**	**Yearly PTE**
PM	1.0133	0.0294	1.0133	0.0294	0.00E+00	0.00E+00
PM10	0.4743	0.0933	0.4748	0.0933	-5.02E-04	-1.76E-05
VOC	2.9858	13.0822	1.2702	5.5708	1.7156	7.5114
CO	0.2021	0.8851	0.2076	0.9094	-0.0056	-0.0243
NOx	0.2406	1.0537	0.2472	1.0826	-0.0066	-0.0289
SO2	0.0014	0.0063	0.0015	0.0064	-7.56E-06	-3.31E-05
Pb	1.20E-06	5.27E-06	1.24E-06	5.41E-06	-3.30E-08	-1.45E-07
HAPs	0.1089	0.4770	0.1075	0.4720	0.0014	0.0050
TAPs	0.0008	0.0034	0.0005	0.0022	2.87E-04	1.26E-03

Notes: 1) Increase in VOC, HAPs and TAPs emissions from proposed removal of Flare.
2) Decrease in PM10, CO, Nox, Pb and SO2 emissions from proposed removal of Flare.

Bryan Research & Engineering, Inc.

ProMax® 3.2

with

TSWEET® & PROSIM®

Copyright © BR&E Group, Ltd., 2002-2011. All Rights Reserved.

Simulation Report	
Client Name	Antero Resources Corporation
Location	West Virginia
Job	Maxwell Horizontal Pad

Project Name	PROMAX SCENARIO 3
File Name	ProMax@C:\Users\yichen\Documents\New Model\Antero ProMax\PROMAX SCENARIO 3.PMX
ProMax Version	3.2.13330.0

Report Created	1/6/2015 16:22

Stream HP Separator Gas C3+ Mass Flow =7,210 ton/yr

Properties	HP Separator Gas	
Pressure(Total)	200*	psig
Temperature(Total)	69*	°F

Names	Units	Sales Oil	Produced Water
Std Liquid Volumetric Flow	bbl/d	1.3305	15.976
Reid Vapor Pressure	psi	7.6296	1.0227

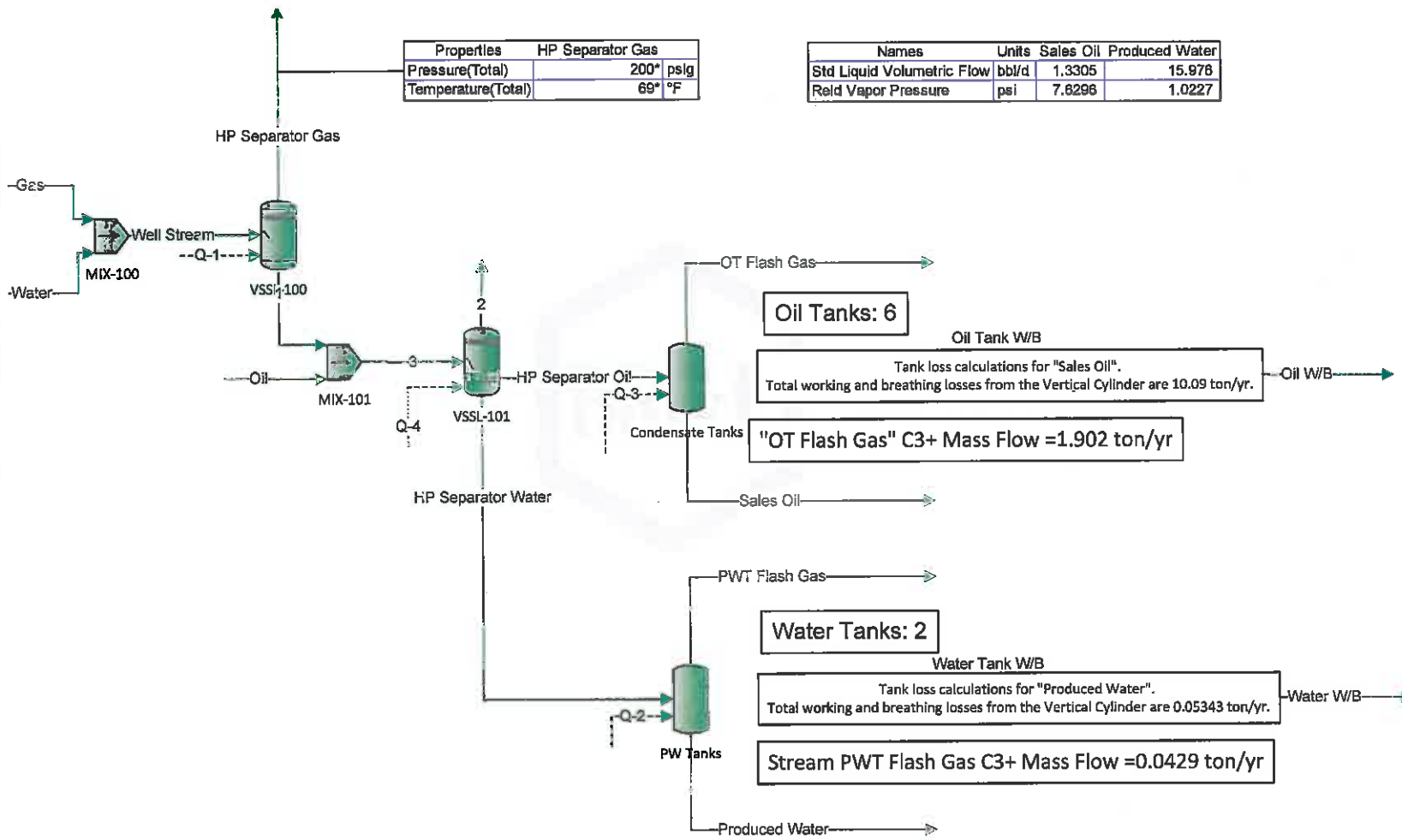

Process Streams		Well Stream	HP Separator Gas	HP Separator Water	HP Separator Oil	OT Flash Gas	Sales Oil	Gas	Water	Oil	Produced Water	PWT Flash Gas	Oil WB	Water WB	1	2	3
Phase: Total	Status	Solved	Solved	Solved	Solved	Solved	Solved	Solved	Solved	Solved	Solved	Solved	Solved	Solved	Solved	Solved	Solved
Mole Fraction		%	%	%	%	%	%	%	%	%	%	%	%	%	%	%	%
Water		3.17414	0.173463	99.9834	0.0618982	0.350321	0.00697017	0	100	0	99.9969	3.02997	0.000270659	94.2968	99.9638		99.8523
H2S		0	0	0	0	0	0	0	0	0	0	0	0	0	0		0
Nitrogen		0.478857	0.493803	0.000100985	0.0119264	0.0783346	0.000107008	0.494659	0	0.0130001	2.31173E-06	0.282723	0.00416841	0.00501693	8.80573E-06		0.000231880
Carbon Dioxide		0.142060	0.146432	0.000841732	0.0319076	0.186327	0.00357037	0.146717	0	0.0140001	0.000491621	1.01396	0.280369	1.21229	0.00104195		0.00118509
Methane		75.2354	77.5671	0.0285432	5.28862	33.1776	0.147095	77.7019	0	5.37205	0.00185910	77.2404	9.03165	3.80660	0.0274169		0.0864565
Ethane		13.7496	14.1757	0.00520889	6.63638	30.7516	0.906005	14.2004	0	5.51708	0.000391198	13.9454	47.2200	0.634521	0.00544420		0.0663283
Propane		4.35167	4.48652	0.00134296	4.86373	19.3410	2.20704	4.49433	0	4.82005	0.000110573	3.58729	25.5524	0.0395710	0.00185781		0.0550821
Isobutane		0.548680	0.565888	5.22862E-05	1.44635	3.80064	1.05102	0.566666	0	1.34501	1.88300E-06	0.146770	4.38777	0.000203877	7.62451E-05		0.0160368
n-Butane		1.14636	1.18189	0.000177841	3.29172	6.41953	2.72129	1.18394	0	3.28203	1.14276E-05	0.481125	7.78705	0.00100582	0.000337550		0.0365889
Isopentane		0.363043	0.374296	3.18002E-05	2.21333	2.05030	2.24325	0.374944	0	2.21102	1.43102E-06	0.0679067	2.34255	4.60585E-05	8.98527E-05		0.0244932
n-Pentane		0.282184	0.290830	2.08687E-05	2.01388	1.43966	2.11923	0.291434	0	2.01202	9.30178E-07	0.0577081	1.63024	2.20625E-05	5.25922E-05		0.022277
2-Methylpentane		0	0	2.93321E-06	1.47702	0.469278	1.68195	0	0	1.47801	6.37558E-08	0.00830584	0.512699	6.06062E-07	0		0.0163269
3-Methylpentane		0	0	5.08709E-06	1.04004	0.295704	1.17663	0	0	1.04101	2.89231E-07	0.0138879	0.324368	2.45592E-06	0		0.0114995
n-Hexane		0.527860	0.544223	3.27838E-06	2.91139	0.670320	3.32265	0.545164	0	2.91003	5.89168E-08	0.00932170	0.0499242	2.63517E-06	3.48703E-05		0.0321800
Methylcyclopentane		0	0	2.71507E-06	0.230645	0.0491496	0.263951	0	0	0.231002	4.16073E-07	0.00665498	0.0521239	2.53176E-06	0		0.00255177
Benzene		0	0	3.36899E-05	0.0809382	0.0122904	0.0898654	0	0	0.0840006	3.05001E-05	0.00978480	0.000860338	1.14386E-05	0		0.000706986
2-Methylhexane		0	0	9.21621E-07	1.69509	0.168788	1.97318	0	0	1.69602	1.70013E-08	0.00261849	0.0118009	3.12978E-09	0		0.0187351
3-Methylhexane		0	0	7.62190E-07	1.41924	0.133816	1.65513	0	0	1.42001	1.43840E-08	0.00216371	0.141794	3.87810E-08	0		0.0156862
Heptane		0	0	1.30351E-06	2.89148	0.216950	3.38228	0	0	2.89303	2.52508E-08	0.00370001	0.211568	4.88871E-08	0		0.0319579
Methylcyclohexane		0	0	4.41838E-06	1.77374	0.128701	2.07544	0	0	1.77502	4.72569E-07	0.0114218	0.132286	9.28061E-07	0		0.0196076
Toluene		0	0	6.02782E-05	0.489366	0.0277844	0.574070	0	0	0.495005	5.31687E-05	0.0208319	0.00406669	1.16051E-05	0		0.00548805
Octane		0	0	7.01312E-07	8.50080	0.202127	10.0237	0	0	8.50509	9.02526E-09	0.00200367	0.185150	6.13651E-09	0		0.0939516
Ethylbenzene		0	0	3.28963E-05	0.874630	0.0167316	1.03206	0	0	0.878009	2.86809E-05	0.0122741	0.00454596	3.88975E-08	0		0.00989894
m-Xylene		0	0	2.34158E-05	0.731549	0.0117035	0.863645	0	0	0.734007	2.04897E-05	0.00846951	0.00410219	2.99857E-05	0		0.00810823
o-Xylene		0	0	5.60685E-05	1.47027	0.0208013	1.73525	0	0	1.47601	5.07161E-05	0.0155434	0.00637797	5.74019E-06	0		0.0163048
Nonane		0	0	3.27679E-07	7.69323	0.0608467	9.09367	0	0	7.69706	6.55654E-09	0.000920022	0.0497348	1.12168E-09	0		0.0850259
C10+		0	0	8.16334E-06	41.9989	0.121036	49.6638	0	0	42.0204	1.61469E-06	0.0189570	0.0920953	9.22192E-06	0		0.464180
Molar Flow		lbmol/h	lbmol/h	lbmol/h	lbmol/h	lbmol/h	lbmol/h	lbmol/h	lbmol/h	lbmol/h	lbmol/h	lbmol/h	lbmol/h	lbmol/h	lbmol/h	lbmol/h	lbmol/h
Water		13.6613	0.724040	12.9372	6.95249E-05	7.65627E-05	1.09621E-05	0	13.6613	0	12.9370	0.000135474	1.51052E-07	0.000627050	12.9373	0	12.9373
H2S		0	0	0	0	0	0	0	0	0	0	0	0	0	0	0	0
Nitrogen		2.06140	2.06139	1.30694E-05	1.72495E-05	1.71187E-05	1.30771E-07	2.06140	0	1.67931E-05	4.28452E-07	1.26409E-05	2.48036E-06	3.33607E-08	1.15258E-05	0	3.03189E-05
Carbon Dioxide		0.611419	0.611284	0.000108939	4.61487E-05	4.17855E-05	4.36322E-06	0.611419	0	2.02387E-05	8.36031E-05	4.53366E-06	0.000166830	8.06126E-06	0.000134849	0	0.000153087
Methane		323.809	323.805	0.00369403	0.00762013	0.00744037	0.000179780	323.809	0	0.00776588	0.000240520	0.00345351	0.00537418	2.53258E-05	0.00354828	0	0.0113142
Ethane		59.1778	59.1769	0.000674129	0.00800596	0.00689631	0.00110964	59.1778	0	0.00797549	5.06110E-05	0.000623618	0.0280977	4.22000E-06	0.000704586	0	0.00858008
Propane		18.7293	18.7291	0.000173809	0.00703453	0.00433729	0.00269714	18.7293	0	0.00696786	1.43053E-05	0.000159492	0.0162047	2.63132E-07	0.000240437	0	0.00720833
Isobutane		2.36148	2.36147	6.76708E-06	0.00209189	0.000607475	0.00128412	2.36148	0	0.00208892	2.04600E-07	6.56226E-06	0.00261089	1.35571E-09	9.73820E-06	0	0.00209866
n-Butane		4.93386	4.93382	2.29901E-05	0.00476523	0.00143964	0.00332558	4.93386	0	0.00474453	1.47844E-06	2.15117E-05	0.00462169	6.68835E-09	4.36869E-05	0	0.00478822
Isopentane		1.56251	1.56251	4.11555E-06	0.00320119	0.000459799	0.00274140	1.56251	0	0.00319727	1.85137E-07	3.93042E-06	0.00139390	3.06272E-10	9.04032E-06	0	0.00320531
n-Pentane		1.21450	1.21449	2.70054E-06	0.00291270	0.000322856	0.00258984	1.21450	0	0.00290858	1.20381E-07	2.58020E-06	0.000970057	1.46641E-10	6.80645E-06	0	0.00291540
2-Methylpentane		0	0	3.79613E-07	0.00213625	0.000105210	0.00203101	0	0	0.00213663	8.24834E-09	3.71364E-07	0.000305075	4.03009E-12	0	0	0.00213663
3-Methylpentane		0	0	6.58364E-07	0.00150423	6.63143E-05	0.00143792	0	0	0.00150489	3.74191E-08	8.20945E-07	0.000193011	1.63376E-11	0	0	0.00150489
n-Hexane		2.27188	2.27187	4.24282E-07	0.00421062	0.000150325	0.00406050	2.27188	0	0.00420676	7.36357E-09	4.16916E-07	2.97068E-05	1.73229E-13	4.46701E-06	0	0.00421124
Methylcyclopentane		0	0	3.51381E-07	0.000333587	1.10222E-05	0.000322565	0	0	0.000333939	5.38291E-08	2.97552E-07	3.10157E-05	1.68353E-11	0	0	0.000333935
Benzene		0	0	4.36341E-06	8.81364E-05	2.75623E-06	6.53601E-05	0	0	9.25198E-05	3.94593E-06	4.37482E-07	5.05983E-07	7.60614E-11	0	0	9.25198E-05
2-Methylhexane		0	0	1.19275E-07	0.00245165	3.78523E-05	0.00241380	0	0	0.00245177	2.19953E-09	1.17076E-07	7.02200E-08	2.08119E-14	0	0	0.00245177
3-Methylhexane		0	0	9.86418E-08	0.00205288	3.00094E-05	0.00202267	0	0	0.00205278	1.89973E-09	9.67421E-08	8.43731E-05	2.57746E-13	0	0	0.00205278
Heptane		0	0	1.68699E-07	0.00418201	4.86531E-05	0.00413336	0	0	0.00418218	3.28681E-09	1.65432E-07	0.000125891	3.23618E-13	0	0	0.00418218
Methylcyclohexane		0	0	5.71822E-07	0.00256541	2.90867E-05	0.00253632	0	0	0.00256596	6.11383E-08	5.10684E-07	7.87147E-05	6.17139E-12	0	0	0.00256598
Toluene		0	0	7.80114E-06	0.000707781	6.23090E-06	0.000701550	0	0	0.000715583	6.87867E-06	9.22177E-07	2.41984E-06	7.71697E-11	0	0	0.000715583
Octane		0	0	9.07632E-08	0.0122949	4.53288E-05	0.0122496	0	0	0.0122950	1.16764E-09	8.95955E-08	0.000110171	3.41559E-14	0	0	0.0122950
Ethylbenzene		0	0	4.25767E-06	0.00126500	3.75222E-06	0.00126125	0	0	0.00126925	3.70798E-06	5.49686E-07	2.70502E-08	2.58654E-11	0	0	0.00126926
m-Xylene		0	0	3.03042E-06	0.00105806	2.62465E-06	0.00105543	0	0	0.00106109	2.65084E-06	3.79576E-07	2.44096E-08	1.99400E-11	0	0	0.00106109
o-Xylene		0	0	7.25632E-06	0.00213648	4.98488E-06	0.00212182	0	0	0.00213374	6.56136E-06	6.94964E-07	3.79614E-08	3.81701E-11	0	0	0.00213374
Nonane		0	0	4.24078E-08	0.0111269	1.36006E-05	0.0111133	0	0	0.0111269	8.81165E-10	4.15467E-08	2.95841E-05	7.45877E-15	0	0	0.0111269
C10+		0	0	1.05649E-06	0.0607439	2.71434E-05	0.0607168	0	0	0.0607450	2.08899E-07	8.47592E-07	5.48002E-05	6.13223E-13	0	0	0.0607450
Mass Fraction		%	%	%	%	%	%	%	%	%	%	%	%	%	%	%	%
Water		2.74958	0.149623	99.9581	0.0105938	0.185089	0.00136680	0	100	0	99.9952	2.75039	0.000125397	92.6131	99.9573		93.8322
H2S		0	0	0	0	0	0	0	0	0	0	0	0	0	0		0
Nitrogen		0.645151	0.662402	0.000157021	0.00317404	0.0627133	2.53454E-05	0.663391	0	0.00343869	6.14958E-06	0.399064	0.00301741	0.00758180	0.000138474		0.000341936
Carbon Dioxide		0.300620	0.306592	0.00205620	0.0133406	0.240489	0.00132602	0.309119	0	0.00585197	0.00120096	2.24645	0.318842	2.90658	0.00254521		0.00274784
Methane		58.0353	59.5869	0.0254161	0.802977	15.6095	0.0199441	59.6762	0	0.818530	0.00162548	82.4353	3.74101	3.33091	0.0214130		0.0730739
Ethane		19.8797	20.4111	0.00869362	1.58126	27.1181	0.230756	20.4417	0	1.57562	0.000652931	21.1294	38.6897	1.04030	0.00908626		0.105076
Propane		9.22679	9.47345	0.00328694	2.03751	25.0119	0.822526	9.48766	0	2.01869	0.000270642	7.92590	29.1156	0.0951258	0.00454703		0.127967
Isobutane		1.53342	1.57442	0.000168687	0.798641	6.13753	0.516297	1.57677	0	0.797696	6.10710E-06	0.429828	6.58999	0.000646007	0.000242746		0.0491081
n-Butane		3.20377	3.28943	0.000573088	1.81926	10.9425	1.32678	3.29435	0	1.81179	3.58878E-05	1.40901	11.6653	0.00315706	0.00106699		0.112043
Isopentane		1.25946	1.29314	0.000127348	1.51709	4.33829	1.36789	1.29507	0	1.51511	5.73092E-06	0.219570	4.36732	0.000181161	0.000279733		0.0931039
n-Pentane		0.978948	1.00513	8.35638E-05	1.38037	3.04622	1.29227	1.00663	0	1.37875	3.72517E-06	0.209788	3.03934	8.67387E-05	0.000210611		0.0846828
2-Methylpentane		0	0	1.40301E-05	1.20922	1.18600	1.21043	0	0	1.20972	3.04867E-07	0.0360646	1.14168	2.84728E-06	0		0.0741278
3-Methylpentane		0	0	2.43325E-05	0.851468	0.747330	0.856975	0	0	0.852043	1.38350E-06	0.0603024	0.722302	1.15425E-05	0		0.0522104
n-Hexane		2.18726	2.24576	1.56811E-05	2.38353	1.69409	2.41999	2.24910	0	2.38179	2.72251E-07	0.0404686	0.111171	1.23799E-07	0.000165633		0.148104
Methylcyclopentane		0	0	1.26829E-05	0.184409	0.121310	0.187743	0	0	0.184647	1.84367E-06	0.0282205	0.113354	1.16159E-05	0		0.0113146
Benzene		0	0	0.000146848	0.0452212	0.0281550	0.0461237	0	0	0.0474815	0.000132242	0.0385101	0.00171635	4.97091E-05	0		0.00290951
2-Methylhexane		0	0	5.12983E-06	1.61384	0.496010	1.67274	0	0	1.61410	9.45606E-08	0.0132203	0.0305556	1.70969E-08	0		0.0989066
3-Methylhexane		0	0	4.23911E-06	1.35104	0.393238	1.40169	0	0	1.35143	8.16718E-08	0.0109212	0.367142	2.11737E-07	0		0.0828110
Heptane		0	0	7.24980E-06	2.75253	0.637542	2.86438	0	0	2.75329	1.40442E-07	0.0186807	0.547803	2.65851E-07	0		0.168713
Methylcyclohexane		0	0	2.40786E-05	1.65453	0.373479	1.72226	0	0	1.65530	2.67583E-06	0.0565087	0.335629	4.98778E-06	0		0.101431

Isobutane		0.562558	0.565858				3.60064	3.60064	0.566866		1.25355	0.146770	0.146770	4.39777	0.000203877	0.565888		0.414969
n-Butane		1.16609	1.18159				8.41953	8.41953	1.18394		2.24346	0.481125	0.481125	7.78705	0.00100582	1.18159		0.859482
Isopentane		0.365807	0.374296				2.05030	2.05030	0.374944		0.815147	0.0879067	0.0879067	2.54255	4.60585E-05	0.374296		0.182174
n-Pentane		0.284332	0.290930				1.43565	1.43568	0.291434		0.616835	0.0577081	0.0577081	1.63024	2.20525E-05	0.290930		0.127341
2-Methylpentane		0	0				0.468278	0.468278	0		0.252570	0.00830584	0.00830584	0.512899	6.03092E-07	0		0.0380509
3-Methylpentane		0	0				0.295704	0.295704	0		0.163894	0.0138879	0.0138879	0.324368	2.45892E-06	0		0.0245250
n-Hexane		0.501879	0.544223				0.870320	0.870320	0.545164		0.404972	0.00932470	0.00932470	0.0496242	2.63517E-06	0.544223		0.0567966
Methylcyclopentane		0	0				0.0491498	0.0491498	0		0.0290092	0.00665498	0.00665498	0.0521239	2.53176E-06	0		0.00402074
Benzene		0	0				0.0122904	0.0122904	0		0.00784333	0.00078480	0.00078480	0.000360338	1.14365E-05	0		0.00100172
2-Methylhexane		0	0				0.168788	0.168788	0		0.141815	0.0026184[illegible]	0.0026184[illegible]	0.0118009	3.12978E-09	0		0.0145319
3-Methylhexane		0	0				0.133816	0.133816	0		0.111989	0.0021637[illegible]	0.00216371	0.141754	3.87810E-06	0		0.0114[illegible]
Heptane		0	0				0.216850	0.216850	0		0.163078	0.00370001	0.00370001	0.211558	4.88671E-09	0		0.0188382
Methylcyclohexane		0	0				0.129701	0.129701	0		0.102318	0.0114218	0.0114218	0.132285	9.25081E-07	0		0.0109979
Toluene		0	0				0.0277844	0.0277844	0		0.0252300	0.0208319	0.0208319	0.00406669	1.13061E-05	0		0.00234863
Octane		0	0				0.202127	0.202127	0		0.209980	0.00200087	0.00200087	0.165160	6.1[illegible]E-09	0		0.01840[illegible]
Ethylbenzene		0	0				0.0167316	0.0167316	0		0.0222032	0.0122941	0.0122941	0.00454596	3.8897E-06	0		0.00149156
m-Xylene		0	0				0.0117036	0.0117036	0		0.0168211	0.00848851	0.00848851	0.00410219	2.99867E-06	0		0.00105089
p-Xylene		0	0				0.0208013	0.0208013	0		0.0308330	0.0155434	0.0155434	0.00937797	5.74019E-06	0		0.00185871
Nonane		0	0				0.0606487	0.0606487	0		0.119514	0.000925222	0.000925222	0.0497348	1.12168E-09	0		0.00580123
C10+		0	0				0.121038	0.121038	0		0.232307	0.0189570	0.0189570	0.0920953	9.22192E-08	0		0.0119854
Molar Flow		lbmol/h	lbmol/h	lbmol/h	lbmol/h		lbmol/h	lbmol/h	lbmol/h		lbmol/h	lbmol/h	lbmol/h	lbmol/h	lbmol/h	lbmol/h	lbmol/h	lbmol/h
Water		10.4093	0.724040				7.85927E-05	0	0		0	0	0.000135474	1.31052E-07	0.000627050	0		8.24067E-07
H2S		0	0				0	0	0		0	0	0	0	0	0		0
Nitrogen		2.06140	2.06139				1.71187E-05	0	2.06140		8.08660E-06	0	1.26409E-05	2.48036E-06	3.33607E-08	0		2.17152E-06
Carbon Dioxide		0.611403	0.611284				4.17855E-05	0	0.611419		1.54668E-06	0	4.53356E-05	0.000158930	8.08126E-06	0		5.05249E-07
Methane		323.808	323.806				0.00744037	0	323.809		0.00135132	0	0.00343651	0.00537418	2.52258E-06	0		0.000328289
Ethane		59.1775	59.1739				0.00389631	0	59.1776		0.000438828	0	0.000823518	0.0280977	4.22000E-06	0		5.71450E-05
Propane		18.7293	18.7291				0.00193739	0	18.7293		0.000162598	0	0.000159468	0.0152047	2.63132E-07	0		1.39026E-05
Isobutane		2.38148	2.38147				0.000807475	0	2.38148		2.64710E-05	0	6.58228E-06	0.00261089	1.35571E-09	0		1.88881E-06
n-Butane		4.93398	4.93382				0.00143984	0	4.[illegible]386		4.73746E-05	0	2.15117E-05	0.00482169	5.68836E-09	0		2.88880E-06
Isopentane		1.56251	1.56251				0.000459798	0	1.56251		1.72132E-05	0	3.93042E-06	0.00138390	3.05772E-10	0		7.45789E-07
n-Pentane		1.21450	1.21449				0.000322856	0	1.21450		1.30265E-05	0	2.58020E-06	0.000970057	1.49941E-10	0		5.08984E-07
2-Methylpentane		0	0				0.000105240	0	0		5.33346E-06	0	3.71364E-07	0.000305075	4.05009E-12	0		1.58668E-07
3-Methylpentane		0	0				6.53143E-05	0	0		3.46091E-06	0	6.20946E-07	0.000183011	1.63376E-11	0		1.00401E-07
n-Hexane		2.27188	2.27187				0.000150325	0	2.27188		8.55166E-06	0	4.16919E-07	2.97066E-05	1.75229E-13	0		2.29422E-07
Methylcyclopentane		0	0				1.10222E-05	0	0		6.12579E-07	0	2.97552E-07	3.10157E-05	1.68635E-11	0		1.64602E-08
Benzene		0	0				2.75623E-06	0	0		1.64402E-07	0	4.37462E-07	5.05983E-07	7.80614E-11	0		4.10085E-09
2-Methylhexane		0	0				3.78523E-05	0	0		2.98489E-06	0	1.17078E-07	7.02200E-06	2.08119E-14	0		5.91634E-08
3-Methylhexane		0	0				3.00094E-05	0	0		2.36480E-06	0	9.67421E-08	8.43731E-05	2.57746E-13	0		4.68843E-08
Heptane		0	0				4.86531E-05	0	0		4.07714E-06	0	1.65332E-07	0.000[illegible]3881	3.23618E-13	0		7.71200E-08
Methylcyclohexane		0	0				2.90887E-05	0	0		2.29789E-06	0	5.10984E-07	7.87147E-05	6.17139E-12	0		4.50234E-08
Toluene		0	0				6.23080E-06	0	0		7.32776E-07	0	9.22477E-07	2.41984E-06	7.71697E-11	0		9.61488E-09
Octane		0	0				4.53286E-05	0	0		5.70109E-06	0	8.95958E-08	0.000110171	3.41669E-14	0		7.56036E-08
Ethylbenzene		0	0				3.75222E-06	0	0		4.68959E-07	0	5.19986E-07	2.70502E-09	2.58654E-11	0		6.10620E-09
m-Xylene		0	0				2.62453E-06	0	0		3.56207E-07	0	3.79576E-07	2.43985E-06	1.99400E-11	0		4.30217E-09
p-Xylene		0	0				4.66488E-06	0	0		6.46968E-07	0	6.94984E-07	3.79514E-06	3.81701E-11	0		7.66016E-09
Nonane		0	0				1.36065E-05	0	0		2.52375E-06	0	4.15487E-08	2.96941E-05	7.45677E-15	0		2.37[illegible]25E-08
C10+		0	0				2.71[illegible]45E-05	0	0		7.01723E-06	0	8.47592E-07	5.49002E-05	8.13223E-13	0		4.89843E-08
Mass Fraction		%	%	%	%		%	%	%		%	%	%	%	%	%	%	%
Water		2.10685	0.149623				0.185089	0.185089	0		0	2.75039	2.75039	0.000125997	92.6131	0.149623		0.182621
H2S		0	0				0	0	0		0	0	0	0	0	0		0
Nitrogen		0.649402	0.652402				0.0627133	0.062713[illegible]	0.[illegible]33391		0.318[illegible]39	0.339064	0.339064	0.00301711	0.0074[illegible]180	0.652402		0.748286
Carbon Dioxide		0.302593	0.306592				0.240486	0.210486	0.208118		0.126872	2.24845	2.24843	0.318942	2.90658	0.306592		0.273520
Methane		58.4177	52.5869				15.6095	15.6095	59.6782		40.4059	82.4353	82.4353	3.7[illegible]401	3.33091	59.5689		54.7798
Ethane		20.0107	20.4111				27.1181	27.1181	20.4[illegible]17		24.5895	21.1284	21.1284	38.6897	1.04030	20.4111		21.1366
Propane		9.28758	9.47345				25.0119	25.0119	9.18768		13.3637	7.92580	7.92580	29.1156	0.0951258	9.47345		7.54110
Isobutane		1.54352	1.57442				8.13753	8.13753	1.57[illegible]7		2.66768	0.429828	0.429828	5.58999	0.000848007	1.57442		1.21458
n-Butane		3.22488	3.28943				10.9425	10.9425	3.28[illegible]5		5.13219	1.40801	1.40801	11.8853	0.00318706	3.28943		1.83024
Isopentane		1.26776	1.25314				4.33829	4.33829	1.29507		2.31477	0.319570	0.319570	4.36732	0.000151161	1.25314		0.681884
n-Pentane		0.985599	1.00513				3.04322	3.04622	1.00663		1.75162	0.209798	0.209798	[illegible]03924	8.67387E-05	1.00513		0.449946
2-Methylpentane		0	0				1.18600	1.18600	0		0.858659	0.0360646	0.0360646	1.14159	2.84725E-08	0		0.189465
3-Methylpentane		0	0				0.747330	0.747330	0		0.555890	0.0503024	0.0503024	0.722502	1.15425E-05	0		0.106429
n-Hexane		2.20167	2.24576				1.69409	1.69409	2.24910		1.37957	0.0404886	0.0404886	0.111171	1.23799E-07	2.24576		0.242136
Methylcyclopentane		0	0				0.121310	0.121310	0		0.0980805	0.0262205	0.0262205	0.113354	1.18159E-05	0		0.0170402

Benzene		0	0			0.0281550	0.0281550	0		0.0234986	0.0385101	0.0385101	0.00171635	4.87091E-05	0		0.00394032
2-Methylhexane		0	0			0.496010	0.496010	0		0.559298	0.0132203	0.0132203	0.0305558	1.70989E-08	0		0.0729232
3-Methylhexane		0	0			0.395238	0.395238	0		0.441654	0.0109242	0.0109242	0.367172	2.11737E-07	0		0.0577638
Heptane		0	0			0.637542	0.637542	0		0.761460	0.0168807	0.0168807	0.547803	2.65861E-07	0		0.0960568
Methylcyclohexane		0	0			0.373479	0.373479	0		0.420628	0.0595067	0.0595067	0.335829	4.85778E-06	0		0.0543783
Toluene		0	0			0.0750782	0.0750782	0		0.0914957	0.0957844	0.0957844	0.00968233	5.82930E-05	0		0.0108074
Octane		0	0			0.877129	0.877129	0		1.21380	0.0116334	0.0116334	0.548507	2.19667E-08	0		0.108232
Ethylbenzene		0	0			0.0620945	0.0620945	0		0.0827788	0.0857648	0.0857648	0.0124711	2.25128E-05	0		0.00797424
m-Xylene		0	0			0.0384397	0.0384397	0		0.0702875	0.0454129	0.0454129	0.0112537	1.73555E-05	0		0.00561832
o-xylene		0	0			0.0647655	0.0647655	0		0.128001	0.0831460	0.0831460	0.017[illegible]969	3.32226E-05	0		0.00999054
Nonane		0	0			0.228115	0.228115	0		0.503304	0.00600494	0.00600494	0.164829	7.84279E-09	0		0.0374660
C10+		0	0			0.499952	0.499952	0		1.83109	0.133725	0.133725	0.033169	7.03843E-07	0		0.0843571
Mass Flow		lb/h	lb/h	lb/h	lb/h	lb/h	lb/h	lb/h	lb/h	lb/h	lb/h	lb/h	lb/h	lb/h	lb/h	lb/h	lb/h
Water		187.526	13.0438			0.00141533	0	0		0	0	0.00244060	2.80140E-08	0.0112965	0		1.484625-06
H2S		0	0			0	0	0		0	0	0	0	0	0		0
Nitrogen		57.7468	57.7468			0.000478553	0	57.7[illegible]59		0.000170648	0	0.000364115	8.94834E-06	9.34548E-07	0		6.08318E-05
Carbon Dioxide		26.8076	26.8023			0.00183898	0	26.9082		6.80891E-05	0	0.00199520	0.00734212	0.000354772	0		2.22357E-05
Methane		5194.58	5191.63			0.115362	0	5194.69		0.0216785	0	0.0554025	0.0662151	0.000408288	0		0.00526624
Ethane		1778.41	1778.39			0.207365	0	1778.41		0.0131961	0	0.0187488	0.644871	0.000126591	0		0.00171529
Propane		825.881	825.871			0.191260	0	525.882		0.00716608	0	0.00703518	0.970459	1.15030E-06	0		0.000919053
Isobutane		137.255	137.254			0.0469322	0	137.255		0.00163855	0	0.000381414	0.151731	7.87967E-08	0		9.87387E-05
n-Butane		286.767	286.764			0.0936719	0	286.767		0.00275352	0	0.00125091	0.286523	3.88742E-07	0		0.000155919
Isopentane		112.733	112.733			0.0331739	0	112.734		0.00124191	0	0.000283576	0.100568	2.20972E-06	0		5.38078E-05
n-Pentane		87.6247	87.6243			0.0232897	0	87.6248		0.000939777	0	0.000166158	0.0699884	1.05800E-08	0		3.65783E-05
2-Methylpentane		0	0			0.00903908	0	0		0.000459613	0	3.20024E-05	0.0262900	3.47264E-10	0		1.37765E-05
3-Methylpentane		0	0			0.00571485	0	0		0.00029245	0	5.35102E-05	0.0168325	1.40790E-09	0		8.552105-06
n-Hexane		195.780	195.779			0.0126543	0	195.780		0.00073691[illegible]	0	2.58281E-05	0.00255999	1.51004E-11	0		1.98843E-05
Methylcyclopentane		0	0			0.000927826	0	0		5.15543E-05	0	2.50418E-05	0.00261027	1.41685E-09	0		1.38625E-06
Benzene		0	0			0.000215295	0	0		1.28074E-05	0	3.41725E-05	3.96235E-05	5.94130E-09	0		3.20327E-07
2-Methylhexane		0	0			0.0037987	0	0		0.000300073	0	1.17312E-05	0.000703818	2.08539E-12	0		5.92829E-06
3-Methylhexane		0	0			0.00300700	0	0		0.000238981	0	9.69[illegible]E-06	0.00845436	2.52288E-11	0		4.79590E-06
Heptane		0	0			0.00487513	0	0		0.000408637	0	1.65768E-05	0.0126145	3.24272E-11	0		7.72791E-06
Methylcyclohexane		0	0			0.00285591	0	0		0.000225620	0	5.01420E-05	0.00772669	8.05345E-10	0		4.42067E-06
Toluene		0	0			0.000571105	0	0		4.90891E-05	0	6.49556E-05	0.000222980	7.11030E-08	0		5.85900E-07
Octane		0	0			0.00617785	0	0		0.000851228	0	1.02344E-05	0.0125847	3.90157E-12	0		8.63626E-06
Ethylbenzene		0	0			0.000368354	0	0		4.97764E-05	0	5.83573E-05	0.000287178	2.74800E-09	0		6.48264E-07
m-Xylene		0	0			0.000278546	0	0		3.77105E-05	0	4.02977E-05	0.000258145	2.11693E-09	0		4.56740E-07
o-Xylene		0	0			0.000499247	0	0		6.85778E-05	0	7.[illegible]808E-05	0.000402911	4.05230E-09	0		8.12175E-07
Nonane		0	0			0.00174434	0	0		0.000323684	0	5.32657E-06	0.00379959	9.59625E-13	0		3.04595E-06
C10+		0	0			0.00380007	0	0		0.000982412	0	0.000118883	0.00787203	8.65812E-11	0		8.85780E-06

Process Streams		Well Stream	HP Separator Gas	HP Separator Water	HP Separator Oil	OT Flash Gas	Sales Oil	Gas	Water	Oil	Produced Water	PWT Flash Gas	Oil WB	Water WB	1	2	3
Phase: Vapor	Status	Solved	Solved	Solved	Solved	Solved	Solved	Solved	Solved	Solved	Solved	Solved	Solved	Solved	Solved	Solved	Solved
Property	Units																
Temperature	°F	182.4	99.0			75.9	75.9	200.0		200.0	75.9	75.9	75.9425	75.9425	99		73.3965
Pressure	psig	200	200			0	0	300		300	0	0	3.99321	-[illegible].2257	200		200
Mole Fraction Vapor	%	100	100			100	100	100		100	100	100	100	100	100		100
Mole Fraction Light Liquid	%	0	0			0	0	0		0	0	0	0	0	0		0
Mole Fraction Heavy Liquid	%	0	0			0	0	0		0	0	0	0	0	0		0
Molecular Weight	lb/lbmol	20.8	20.9			34.1	[illegible].1	20.9		25.1	19.8	19.8466	35.6992	18.3431	20.8532		19.8579
Mass Density	lb/ft^3	0.7	0.8			0.1	0.1	1.0		1.2	0.1	0.0508122	0.127941	0.00150131	0.837480		0.753984
Molar Flow	lbmol/h	427.1	417.5			0.0	0.0	416.7		0.0	0.0	0.00447112	0.0599038	0.00088[illegible]363	0		0.00040538[illegible]
Mass Flow	lb/h	8862.3	8717.7			0.5	0.0	8704.8		0.1	0.0	0.0887354	2.30275	0.0121976	0		0.00812948
Vapor Volumetric Flow	MCFH	12.9	10.4			0.0	0.0	9.0		0.0	0.0	0.0017[illegible]22	0.0179985	0.00812[illegible]36			1.03284E-05
Liquid Volumetric Flow	MMbl/d	55.0	44.6			0.0	0.0	38.6		0.0	0.0	0.00745030	0.0769360	0.0347291	0		4.43251E-05
Std Vapor Volumetric Flow	MMSCFD	3.9	3.8			0.0	0.0	3.8		0.0	0.0	4.07213E-05	0.000541939	8.05527E-06	0		3.72950E-06
Std Liquid Volumetric Flow	MMbl/d	1.8	1.7			0.0	0.0	1.7		0.0	0.0	1.78875E-05	0.000362213	9.22998E-07	0		1.67412E-06
Compressibility		0.966	0.944			0.990	0.990	0.964		0.942	0.997	0.999693	0.983482	0.999651	0.643044		0.950815
Specific Gravity		0.719	0.721			1.177	1.177	0.721		0.877	0.685	0.695248	1.33818	0.633339	0.721041		0.685640
API Gravity																	
Enthalpy	MMBtu/h	-15.0	-14.4			0.0	0.0	-13.8		0.0	0.0	-0.000184[illegible]56	-0.00253808	-8.75385E-05	0		-1.38672E-06
Mass Enthalpy	Btu/lb	-1684.8	-1652.3			-1199.4	-1199.4	-1579.9		-1374.3	-1853.8	-1853.64	-1102.20	-5527.16	-1652.27		-1705.79
Mass Cp	Btu/(lb*°F)	0.5	0.5			0.4	0.4	0.6		0.5	0.5	0.462283	0.412284	0.444115	0.505753		0.512573
Ideal Gas CpCv Ratio		1.226	1.219			1.160	1.160	1.215		1.178	1.2[illegible]	1.25259	1.14354	1.32251	1.24924		1.25967

Dynamic Viscosity	cP	0.0	0.0			0.0	0.0	0.0		0.0	0.0	0.0108115	0.00878356	0.0102430	0.0107348		0.0109096
Kinematic Viscosity	cSt	1.1	0.9			6.6	6.5	0.8		0.7	13.3	13.2570	4.27611	425.925	0.800218		0.868723
Thermal Conductivity	Btu/(h ft °F)	0.0	0.0			0.0	0.0	0.0		0.0	0.0	0.0171622	0.0114091	0.0122574	0.0177158		0.0182058
Surface Tension	lb/ft																
Net LG. Heating Value	Btu/ft^3	1114.1	1139.9			1804.0	1804.0	1141.9		1371.7	1042.3	1042.25	2039.01	45.8658	1139.92		1088.33
Net Liquid Heating Value	Btu/lb	20225.8	20651.7			19940.4	19940.4	20884.2		20391.8	19848.4	19840.4	19836.3	-58.4718	20651.7		20743.2
Gross LG. Heating Value	Btu/ft^3	1225.4	1258.7			1988.3	1988.3	1258.8		1504.8	1162.1	1162.14	2219.30	98.1791	1258.74		1201.43
Gross Liquid Heating Value	Btu/lb	22327.7	22774.5			21768.4	21768.4	22808.7		22379.7	21949.7	21949.7	21811.0	1045.8	22774.5		22904.4

Process Streams		Well Stream	HP Separator Gas	HP Separator Water	HP Separator Oil	OT Flash Gas	Sales Oil	Gas	Water	Oil	Produced Water	PWT Flash Gas	Oil W/B	Water W/B	1	2	3
Phase: Light Liquid	Status	Solved	Solved	Solved	Solved	Solved	Solved	Solved	Solved	Solved	Solved	Solved	Solved	Solved	Solved	Solved	Solved
Mole Fraction		%	%	%	%	%	%	%	%	%	%	%	%	%	%	%	%
Water		99.9771	99.9636	99.9634	0.061668	0.00897017	0.00897017		100	0	99.9960	99.9969	8.26604E-06	100.0000	99.9638		0.0691850
H2S		0	0	0	0	0	0		0	0	0	0	0	0	0		0
Nitrogen		6.10178E-05	6.90573E-05	0.000100985	0.0119264	0.000107008	0.000107008		0	0.00891145	3.31173E-06	3.31173E-06	7.68132E-06	1.88062E-09	6.90573E-05		0.01111552
Carbon Dioxide		0.000472619	0.00104195	0.000841752	0.0316076	0.00357037	0.00357037		0	0.0131219	0.000431621	0.000491621	0.00575441	1.89060E-05	0.00104195		0.0321261
Methane		0.0182982	0.0274189	0.0285432	5.29962	0.147095	0.147095		0	4.60906	0.00165910	0.00165910	0.0519730	2.94237E-08	0.0274189		5.14357
Ethane		0.00313847	0.00541120	0.00520889	5.53638	0.906005	0.906005		0	5.28071	0.000391158	0.000391158	1.78471	6.71596E-07	0.00544420		5.50670
Propane		0.000678271	0.00185781	0.00134295	4.58373	2.20704	2.20704		0	4.77736	0.000110573	0.000110573	3.72319	3.97708E-08	0.00185781		4.86154
Isobutane		3.46525E-05	7.52451E-05	5.22882E-05	1.44635	1.05102	1.05102		0	1.44765	1.58300E-06	1.58300E-06	1.61994	7.16881E-11	7.52451E-05		1.44771
n-Butane		0.000178502	0.000337580	0.000177641	3.29472	2.72129	2.72129		0	3.28743	1.14276E-05	1.14276E-05	4.15836	7.78288E-10	0.000337580		3.29534
Isopentane		2.90885E-05	6.98527E-05	3.18002E-05	2.21303	2.24325	2.24325		0	2.27171	1.43102E-06	1.43102E-06	3.23488	2.75452E-11	6.98527E-05		2.21670
n-Pentane		2.78145E-05	5.25922E-05	2.0986[illegible]-05	2.01388	2.11923	2.11923		0	2.03270	9.30178E-07	9.30178E-07	3.02279	1.16362E-11	5.25922E-05		2.01702
2-Methylpentane		0	0	2.93321E-06	1.47702	1.66195	1.66195		0	1.49618	6.37556E-08	6.37556E-08	2.28780	1.52779E-13	0		1.47952
3-Methylpentane		0	0	5.06708E-06	1.04004	1.17663	1.17663		0	1.05401	2.89231E-07	2.89231E-07	1.82385	1.88047E-12	0		1.04180
n-Hexane		1.96547E-05	3.46703E-05	3.27836E-06	2.91139	3.32265	3.32265		0	2.94716	5.69165E-08	5.69165E-08	0.311281	5.26933E-15	3.46703E-05		2.91640
Methylcyclopentane		0	0	2.71507E-06	0.230845	0.263951	0.263951		0	0.233997	4.16073E-07	4.16073E-07	0.219633	5.18226E-12	0		0.231041
Benzene		0	0	3.36999E-06	0.0600982	0.0998654	0.0998654		0	0.0648361	3.05001E-05	3.05001E-05	0.00694709	1.18767E-09	0		0.0810028
2-Methylhexane		0	0	9.21821E-07	1.66509	1.97518	1.97518		0	1.71906	1.70013E-08	1.70013E-08	0.172364	8.70613E-16	0		1.69807
3-Methylhexane		0	0	7.62190E-07	1.41724	1.85513	1.85513		0	1.43540	1.46840E-08	1.46840E-08	2.19675	8.67916E-15	0		1.42173
Heptane		0	0	1.30951E-06	2.89148	3.38228	3.38228		0	2.93305	2.52508E-08	2.52508E-08	4.10484	1.08718E-14	0		2.86657
Methylcyclohexane		0	0	4.11838E-06	1.77374	2.07544	2.07544		0	1.79972	4.72569E-07	4.72569E-07	1.82721	1.25498E-12	0		1.77685
Toluene		0	0	8.02782E-05	0.489388	0.574070	0.574070		0	0.501969	5.31687E-05	5.31687E-05	0.103991	9.83988E-10	0		0.490084
Octane		0	0	7.01312E-07	8.60050	10.0237	10.0237		0	8.82716	9.02526E-09	9.02526E-09	11.3987	7.67946E-16	0		8.51587
Ethylbenzene		0	0	3.28983E-05	0.874830	1.03206	1.03206		0	0.890695	2.86609E-05	2.86609E-05	0.345256	2.99987E-10	0		0.876120
m-Xylene		0	0	2.34158E-05	0.731548	0.863345	0.863345		0	0.744639	2.04897E-05	2.04897E-05	0.372932	2.39488E-10	0		0.732780
o-Xylene		0	0	5.90685E-05	1.47027	1.73625	1.73625		0	1.49744	5.07161E-05	5.07161E-05	0.653646	6.19976E-10	0		1.47269
Nonane		0	0	3.27979E-07	7.89323	9.09367	9.09367		0	7.80941	8.85654E-09	8.85654E-09	9.30745	2.67994E-16	0		7.70690
C10+		0	0	5.16934E-06	41.9589	49.6838	49.6838		0	42.6384	1.81439E-08	1.81439E-08	46.5459	2.62266E-13	0		42.0735
Molar Flow		lbmol/h	lbmol/h	lbmol/h	lbmol/h	lbmol/h	lbmol/h	lbmol/h	lbmol/h	lbmol/h	lbmol/h	lbmol/h	lbmol/h	lbmol/h	lbmol/h	lbmol/h	lbmol/h
Water		12.25204	0	12.9372	8.55249E-05	0	1.09621E-05		13.6613	0	12.9370	0	0	0	12.9373		9.99663E-05
H2S		0	0	0	0	0	0		0	0	0	0	0	0	0		0
Nitrogen		1.99478E-08	0	1.30694E-05	1.72495E-05	0	1.30771E-07		0	1.26943E-05	4.29452E-07	0	0	0	1.15259E-05		1.51690E-05
Carbon Dioxide		1.53752E-05	0	0.000108539	4.51467E-05	0	4.36322E-05		0	1.86320E-05	6.59031E-05	0	0	0	0.000134849		4.83623E-05
Methane		0.000623900	0	0.00369403	0.00762913	0	0.000179760		0	0.00641458	9.00024062D	0	0	0	0.00354828		0.00742806
Ethane		0.000102087	0	0.000674129	0.00800595	0	0.00110964		0	0.00763657	5.08110E-05	0	0	0	0.000704588		0.00795321
Propane		2.20627E-05	0	0.000173609	0.00703453	0	0.00269714		0	0.00680530	1.43053E-05	0	0	0	0.000240437		0.00702220
Isobutane		1.12717E-06	0	6.76706E-06	0.00208188	0	0.00128442		0	0.00206245	2.04800E-07	0	0	0	9.73820E-09		0.00209014
n-Butane		5.81330E-06	0	2.29901E-05	0.00478623	0	0.00332559		0	0.00465715	1.47844E-06	0	0	0	4.36669E-05		0.00478200
Isopentane		9.46187E-07	0	4.11555E-06	0.00320119	0	0.00274140		0	0.00317906	1.85137E-07	0	0	0	9.04032E-06		0.00320038
n-Pentane		9.07999E-07	0	2.70054E-06	0.00291270	0	0.00258884		0	0.00285555	1.20341E-07	0	0	0	6.80648E-06		0.00291209
1-Methylpentane		0	0	3.79613E-07	0.00213625	0	0.00203101		0	0.00213129	8.24834E-09	0	0	0	0		0.00213607
3-Methylpentane		0	0	6.56394E-07	0.00150423	0	0.00143792		0	0.00150143	3.74191E-08	0	0	0	0		0.00150411
n-Hexane		6.49013E-07	0	4.24282E-07	0.00421082	0	0.00406050		0	0.00418921	7.36367E-09	0	0	0	4.18701E-06		0.00421057
Methylcyclopentane		0	0	3.51361E-07	0.000333967	0	0.000322553		0	0.000333326	5.38291E-08	0	0	0	0		0.000333570
Benzene		0	0	4.36941E-06	8.81384E-05	0	8.53801E-05		0	9.23584E-05	3.94993E-06	0	0	0	0		8.57332E-05
2-Methylhexane		0	0	1.19275E-07	0.00245185	0	0.00241380		0	0.00244878	2.19933E-08	0	0	0	0		0.00245159
3-Methylhexane		0	0	9.86415E-08	0.00205258	0	0.00202267		0	0.00205042	1.89573E-08	0	0	0	0		0.00205284
Heptane		0	0	1.69959E-07	0.00418201	0	0.00413336		0	0.00417311	3.26881E-08	0	0	0	0		0.00418194
Methylcyclohexane		0	0	5.71822E-07	0.00256541	0	0.00253632		0	0.00256368	6.11383E-08	0	0	0	0		0.00256534
Toluene		0	0	7.80114E-08	0.000707781	0	0.000701560		0	0.000715050	8.87867E-06	0	0	0	0		0.000707532
Octane		0	0	9.07832E-08	0.0122649	0	0.0122496		0	0.0122893	1.15[illegible]E-08	0	0	0	0		0.0122948
Ethylbenzene		0	0	4.25767E-08	0.00126500	0	0.00125126		0	0.00126879	3.70788E-08	0	0	0	0		0.00126190
m-Xylene		0	0	3.03042E-08	0.00105808	0	0.00105643		0	0.00106073	2.65084E-08	0	0	0	0		0.00105795

o-Xylene		0	0	7.25532E-08	0.00212848	0	0.00212182		0	0.00213309	6.56136E-06	0	0	0	0		0.00212921
Nonane		0	0	4.24078E-08	0.0111299	0	0.0111133		0	0.0111244	8.81185E-10	0	0	0	0		0.0111139
C10+		0	0	1.05849E-06	0.0607439	0	0.0607168		0	0.0607380	2.08859E-07	0	0	0	0		0.0607438
Mass Fraction		%	%	%	%	%	%	%	%	%	%	%	%	%	%	%	%	%
Water		99.9746	99.9573	99.9581	0.0105835	0.00136580	0.00136560		100	0	99.9952	99.9952	1.29621E-06	100.0000	99.9573		0.0116243
H2S		0	0	0	0	0	0		0	0	0	0	0	0	0		0
Nitrogen		9.18790E-06	0.000138474	0.000157021	0.00317404	2.63354E-05	2.53354E-05		0	0.00234466	5.14956E-06	5.14956E-06	1.87550E-08	2.92433E-09	0.000138474		0.00297631
Carbon Dioxide		0.00115468	0.00254521	0.00205620	0.0133406	0.00132802	0.00132802		0	0.00542387	0.00120096	0.00120096	0.00259080	4.81903E-05	0.00254321		0.0134131
Methane		0.0162584	0.0244130	0.0254161	0.602977	0.0199441	0.0199441		0	0.679492	0.00166548	0.00166548	0.00725716	2.82018E-06	0.0244130		0.782915
Ethane		0.00523624	0.00906626	0.00969382	1.58126	0.230756	0.230756		0	1.49417	0.000852931	0.000632931	0.467738	9.59050E-07	0.00906626		1.57142
Propane		0.00166015	0.00454703	0.00328694	2.03751	0.622526	0.622526		0	1.97958	0.000270642	0.000270642	1.43095	9.73460E-08	0.00454703		2.03[illegible]98
Isobutane		0.000111798	0.000242743	0.000168887	0.798641	0.518297	0.518297		0	0.790374	5.10710E-08	5.10710E-08	0.620650	2.30983E-10	0.000242743		0.796266
n-Butane		0.000577173	0.00108699	0.000573088	1.81926	1.33578	1.33578		0	1.80005	3.88878E-05	3.88878E-05	2.10660	2.51086E-09	0.00108699		1.81870
Isopentane		0.000116493	0.000279733	0.000127349	1.51709	1.38789	1.38789		0	1.51229	5.73092E-08	5.73092E-08	2.03424	9.83001E-11	0.000279733		1.51726
n-Pentane		0.000111791	0.000210611	8.35638E-05	1.38037	1.29227	1.29227		0	1.37743	3.72517E-08	3.72517E-08	1.90087	4.65974E-11	0.000210611		1.38059
2-Methylpentane		0	0	1.40301E-06	1.20922	1.21045	1.21045		0	1.21097	3.04967E-07	3.04967E-07	1.71840	7.30213E-13	0		1.20968
3-Methylpentane		0	0	2.43325E-06	0.851468	0.858975	0.858975		0	0.853091	1.38350E-06	1.38350E-06	1.21968	8.03848E-12	0		0.851709
n-Hexane		9.54465E-06	0.000165833	1.59911E-06	2.38753	2.41999	2.41999		0	2.38536	2.72254E-07	2.7225[illegible]E-07	0.233504	2.52985E-14	0.000165833		2.38426
Methylcyclopentane		0	0	1.26826E-05	0.184[illegible]09	0.187746	0.187746		0	0.184960	1.94387E-06	1.94387E-06	0.256497	2.42551E-11	0		0.184468
Benzene		0	0	0.000145848	0.0452212	0.0461237	0.0461237		0	0.0475664	0.000132242	0.000132242	0.00404866	5.06288E-09	0		0.0432054
2-Methylhexane		0	0	5.12583E-06	1.81364	1.87274	1.87274		0	1.81783	9.45805E-06	9.45805E-06	0.160582	3.72999E-13	0		1.81418
3-Methylhexane		0	0	4.23911E-06	1.35104	1.40159	1.40159		0	1.35464	9.18718E-06	9.18718E-06	1.90982	1.82739E-14	0		1.35151
Heptane		0	0	7.24980E-06	2.76263	2.86438	2.86438		0	2.76034	1.40444E-07	1.40444E-07	3.58488	8.10257E-14	0		2.75349
Methylcyclohexane		0	0	2.40796E-05	1.85403	1.72228	1.72228		0	1.85967	2.57353E-06	2.57353E-06	2.24834	6.89432E-12	0		1.85510
Toluene		0	0	0.000308274	0.428361	0.447044	0.447044		0	0.434394	0.000271924	0.000271924	0.0835126	5.03257E-09	0		0.428368
Octane		0	0	4.44654E-06	8.72508	9.87713	9.87713		0	9.35563	5.72250E-06	5.72250E-06	11.3487	4.89739E-15	0		9.22841
Ethylbenzene		0	0	0.000193861	0.882147	0.926044	0.926044		0	0.888130	0.000168697	0.000168697	0.319514	1.79726E-09	0		0.882406
m-Xylene		0	0	0.000127982	0.737836	0.774929	0.774929		0	0.742495	0.000120745	0.000120745	0.344716	1.41138E-09	0		0.738037
p-Xylene		0	0	0.000330987	1.46290	1.55790	1.55790		0	1.46913	0.000296967	0.000296967	0.809025	3.85178E-09	0		1.46226
Nonane		0	0	2.33270E-06	9.37367	9.85764	9.85764		0	9.40717	4.73885E-08	4.73885E-08	10.4045	1.80791E-15	0		9.37730
C10+		0	0	6.34354E-06	55.8800	58.7879	58.7879		0	56.0864	1.26478E-05	1.26478E-05	68.7370	2.03804E-12	0		55.8805
Mass Flow		lb/h	lb/h	lb/h	lb/h	lb/h	lb/h	lb/h	lb/h	lb/h	lb/h	lb/h	lb/h	lb/h	lb/h	lb/h	lb/h
Water		56.5864	0	233.067	0.00161282	0	0.000197466		246.112	0	233.064	0	0	0	233.088		0.00179648
H2S		0	0	0	0	0	0		0	0	0	0	0	0	0		0
Nitrogen		5.66003E-05	0	0.000368117	0.000483217	0	3.663345-06		0	0.000355610	1.20024E-05	0	0	0	0.000322876		0.000452948
Carbon Dioxide		0.000876665	0	0.00479430	0.00203088	0	0.000182023		0	0.000822623	0.00279914	0	0	0	0.00583462		0.00204126
Methane		0.00852761	0	0.0592514	0.122248	0	0.00298379		0	0.102905	0.00385853	0	0	0	0.0589332		0.119132
Ethane		0.00306887	0	0.0202704	0.240731	0	0.0330869		0	0.228617	0.00152152	0	0	0	0.0211862		0.239145
Propane		0.000972869	0	0.00768396	0.310192	0	0.118932		0	0.300084	0.000830601	0	0	0	0.0106022		0.309692
Isobutane		6.55137E-05	0	0.000393318	0.121595	0	0.0748532		0	0.119874	1.19034E-05	0	0	0	0.000668005		0.121484
n-Butane		0.000338231	0	0.00123624	0.276865	0	0.193291		0	0.273009	8.58299E-05	0	0	0	0.00253918		0.276776
Isopentane		6.82882E-05	0	0.000258932	0.230962	0	0.197[illegible]38		0	0.229395	1.33674E-05	0	0	0	0.000652248		0.230903
n-Pentane		6.55110E-05	0	0.000194841	0.210147	0	0.186854		0	0.208911	8.68247E-06	0	0	0	0.000491078		0.210104
2-Methylpentane		0	0	3.27132E-06	0.184082	0	0.175023		0	0.183695	7.10839E-07	0	0	0	0		0.184076
3-Methylpentane		0	0	5.67348E-06	0.129628	0	0.123913		0	0.129396	3.22450E-06	0	0	0	0		0.129617
n-Hexane		5.59341E-05	0	3.[illegible]5627E-06	0.362869	0	0.349915		0	0.361782	6.34558E-07	0	0	0	0.000388870		0.362847
Methylcyclopentane		0	0	2.95721E-05	0.0280745	0	0.0271438		0	0.0280625	4.53023E-06	0	0	0	0		0.0280731
Benzene		0	0	0.000342396	0.00688[illegible]19	0	0.00666820		0	0.00721[illegible]28	0.000308224	0	0	0	0		0.00657956
2-Methylhexane		0	0	1.19516E-05	0.245681	0	0.241858		0	0.245372	2.20397E-07	0	0	0	0		0.245654
3-Methylhexane		0	0	9.83410E-06	0.205883	0	0.202878		0	0.205[illegible]56	1.90557E-07	0	0	0	0		0.205878
Heptane		0	0	1.69040E-05	0.419046	0	0.414171		0	0.416654	3.27340E-07	0	0	0	0		0.419098
Methylcyclohexane		0	0	5.81449E-05	0.251867	0	0.249031		0	0.251718	6.00282E-06	0	0	0	0		0.251881
Toluene		0	0	0.000718765	0.0637139	0	0.0647398		0	0.0656836	0.000633789	0	0	0	0		0.0651809
Octane		0	0	1.03577E-05	1.40[illegible]3	0	1.39925		0	1.40379	1.33377E-07	0	0	0	0		1.40442
Ethylbenzene		0	0	0.000452015	0.134298	0	0.13[illegible]900		0	0.134701	0.000393658	0	0	0	0		0.134299
m-Xylene		0	0	0.000021724	0.112328	0	0.112050		0	0.112612	0.000281427	0	0	0	0		0.112318
o-Xylene		0	0	0.000770366	0.225758	0	0.226283		0	0.226450	0.000696587	0	0	0	0		0.225729
Nonane		0	0	5.43902E-06	1.42708	0	1.42534		0	1.42876	1.10451E-07	0	0	0	0		1.42706
C10+		0	0	0.000147909	8.50415	0	8.50395		0	8.50932	2.92459E-05	0	0	0	0		8.50414

Process Stream		Well Stream	HP Separator Gas	HP Separator Water	HP Separator Oil	OT Flash Gas	Sales Oil	Gas	Water	Oil	Produced Water	PWT Flash Gas	OE WB	Water WB	1	2	3
Phase: Light Liquid	Status	Solved	Solved	Solved	Solved	Solved	Solved	Solved	Solved	Solved	Solved	Solved	Solved	Solved	Solved	Solved	Solved
Property	Units																
Temperature	°F	162.4	69.0	69.0	69.0	75.9	75.9		300.0	200.0	75.9	75.94	75.9425	75.9425	69		73.3985

Pressure	psig	200	200	200	200	0	0		200	300	0	0	3.93921	-14.2257	200		200
Mole Fraction Vapor	%	0	0	0	0	0	0		0	0	0	0	0	0	0		0
Mole Fraction Light Liquid	%	100	100	100	100	100	100		100	100	100	100	100	100	100		100
Mole Fraction Heavy Liquid	%	0	0	0	0	0	0		0	0	0	0	0	0	0		0
Molecular Weight	lb/lmol	18.0	18.0	18.0	105.3	118.3	118.3		18.0	106.5	18.0	18.0156	114.752	18.0153	18.0154		105.409
Mass Density	lb/ft^3	60.9	61.3	62.3	45.6	48.3	48.3		57.3	41.6	62.2	62.2170	45.7735	62.2179	62.2694		45.4771
Molar Flow	lbmol/h	3.3	0.0	12.9	0.1	0.0	0.1		13.7	0.1	12.9	0	0	0	12.9420		0.144376
Mass Flow	lb/h	58.6	0.0	233.2	16.2	0.0	14.5		246.1	15.2	233.1	0	0	0	233.169		15.2184
Vapor Volumetric Flow	MCFH	0.0	0.0	0.0	0.0	0.0	0.0		0.0	0.0	0.0	0	0	0	0.0037450		0.000334840
Liquid Volumetric Flow	mbbl/d	0.0	0.0	0.0	0.0	0.0	0.0		0.0	0.0	0.0	0	0	0	0.0160002		0.00143044
Std Vapor Volumetric Flow	MMSCFD	0.0	0.0	0.1	0.0	0.0	0.0		0.1	0.0	0.1	0	0	0	0.117671		0.00131492
Std Liquid Volumetric Flow	Mstb/d	0.0	0.0	0.0	0.0	0.0	0.0		0.0	0.0	0.0	0	0	0	0.0169940		0.00141985
Compressibility		0.910	0.011	0.011	0.057	0.007	0.007		0.008	0.114	0.001	0.00074028	0.00814978	2.36880E-05	0.0108485		0.0868585
Specific Gravity		0.977	0.578	0.998	0.731	0.742	0.742		0.920	0.666	0.998	0.997583	0.733914	0.997677	0.998404		0.729152
API Gravity		10.0	10.0	10.0	60.9	57.2	57.2		10.0	60.3	10.0	10.0154	59.3555	10.0135	10.0480		60.8236
Enthalpy	MMBtu/h	-0.4	0.0	-1.6	0.0	0.0	0.0		-1.6	0.0	-1.6	0	0	0	-1.59180		-0.0126128
Mass Enthalpy	Btu/lb	-6735.9	-6826.8	-6826.8	-624.8	-753.7	-753.7		-6598.5	-753.0	-6822.4	-6822.40	-822.967	-6822.67	-6826.82		-822.215
Mass Cp	Btu/(lb*°F)	1.0	1.0	1.0	0.5	0.5	0.5		1.0	0.6	1.0	0.992734	0.476580	0.992746	0.993132		0.478119
Ideal Gas CpOv Ratio		1.322	1.326	1.326	1.054	1.048	1.049		1.316	1.044	1.326	1.32555	1.04910	1.32556	1.32586		1.06355
Dynamic Viscosity	cP	0.4	1.0	1.0	0.5	0.6	0.6		0.2	0.3	0.9	0.924438	0.558860	0.924435	1.00823		0.465377
Kinematic Viscosity	cSt	0.4	1.0	1.0	0.7	0.8	0.8		0.2	0.4	0.9	0.927572	0.782198	0.927556	1.01080		0.556253
Thermal Conductivity	Btu/(h ft °F)	0.4	0.3	0.3	0.1	0.1	0.1		0.4	0.1	0.3	0.348784	0.0877121	0.349035	0.346048		0.0872083
Surface Tension	lbf/ft	0.004	0.005	0.005	0.001	0.002	0.002		0.003	0.001	0.005	0.00499713	0.00154801	0.00499737	0.00504747		0.00141223
Net LG Heating Value	Btu/ft^3	0.2	0.4	0.0	5283.7	5922.3	5922.3		0.0	5344.0	0.0	0.0347758	5758.84	3.71601E-05	0.398960		0.290.95
Net Liquid Heating Value	Btu/lb	-1054.4	-1050.9	-1051.0	18881.0	18824.9	18824.9		-1059.8	18878.9	-1059.0	-1059.98	18892.4	-1059.78	-1050.99		18880.0
Gross LG Heating Value	Btu/ft^3	50.5	50.7	50.7	5966.2	6347.2	6347.2		50.3	5732.3	50.3	50.3484	6177.53	50.3100	50.7317		55.3.88
Gross Liquid Heating Value	Btu/lb	5.6	9.2	9.1	20266.0	20186.6	20186.6		0.0	20261.8	0.8	0.784137	20266.6	0.000326938	9.24204		20264.8

Process Streams		Well Stream	HP Separator Gas	HP Separator Water	HP Separator Oil	OT Flash Gas	Sales Oil	Gas	Water	Oil	Produced Water	PWT Flash Gas	Oil WB	Water WB	1	2	3
Phase: Heavy Liquid	Status	Solved	Solved	Solved	Solved	Solved	Solved	Solved	Solved	Solved	Solved	Solved	Solved	Solved	Solved	Solved	Solved
Mole Fraction		%	%	%	%	%	%	%	%	%	%	%	%	%	%	%	%
Water					99.9634												99.9845
H2S					0												0
Nitrogen					0.000100985												9.25560E-05
Carbon Dioxide					0.000841752												0.000836053
Methane					0.0285432												0.0275068
Ethane					0.00520688												0.00517450
Propane					0.00134295												0.00132306
Isobutane					5.23882E-05												5.26886E-05
n-Butane					0.000177641												0.000181877
Isopentane					3.18002E-05												3.23429E-05
n-Pentane					2.06657E-05												2.16259E-05
2-Methylpentane					2.93321E-06												3.08778E-06
3-Methylpentane					5.08706E-06												5.29584E-06
n-Hexane					3.27638E-06												3.45650E-06
Methylcyclopentane					2.71507E-06												2.71655E-06
Benzene					3.38636E-05												3.43288E-05
2-Methylhexane					9.21621E-07												9.30937E-07
3-Methylhexane					7.52190E-07												7.71745E-07
Heptane					1.30351E-06												1.27804E-06
Methylcyclohexane					4.41839E-06												4.56794E-06
Toluene					6.02782E-05												6.21297E-05
Octane					7.01312E-07												7.46315E-07
Ethylbenzene					3.28983E-05												3.35772E-05
m-Xylene					2.34166E-05												2.41806E-05
o-Xylene					5.60685E-05												5.31177E-05
Nonane					3.27678E-07												3.40850E-07
C10+					8.16334E-06												8.56068E-06
Molar Flow		lbmol/h	lbmol/h	lbmol/h	lbmol/h	lbmol/h	lbmol/h	lbmol/h	lbmol/h	lbmol/h	lbmol/h	lbmol/h	lbmol/h	lbmol/h	lbmol/h	lbmol/h	lbmol/h
Water					0												12.9372
H2S					0												0
Nitrogen					0												1.19784E-05
Carbon Dioxide					0												0.000108200
Methane					0												0.00356983

n-Hexane					0												3.85[illegible]05
Methylcyclopentane					0												2.958825-05
Benzene					0												0.000347010
2-Methylhexane					0												1.207236-05
3-Methylhexane					0												1.00079E-05
Heptane					0												1.657355-05
Methylcyclohexane					0												5.804475-05
Toluene					0												0.000740654
Octane					0												1.103295-05
Ethylbenzene					0												0.000461338
m-Xylene					0												0.000331957
o-Xylene					0												0.000798514
Nonane					0												5.790945-06
C10+					0												0.000155110

Process Stream		Well Stream	HP Separator Gas	HP Separator Water	HP Separator Oil	OT Flash Gas	Sales Oil	Gas	Water	Oil	Produced Water	PWT Flash Gas	Oil WB	Water WB	1	2	3
Phase Heavy Liquid	Status	Solved	Solved	Solved	Solved	Solved	Solved	Solved	Solved	Solved	Solved	Solved	Solved	Solved	Solved	Solved	Solved
Property	Units																
Temperature	°F				89.0												73.3965
Pressure	psig				200												200
Mole Fraction Vapor	%				0												0
Mole Fraction Light Liquid	%				0												0
Mole Fraction Heavy Liquid	%				100												100
Molecular Weight	lb/lbmol				18.0												18.0163
Mass Density	lb/ft^3				62.3												62.2284
Molar Flow	lbmol/h				0.0												12.9417
Mass Flow	lb/h				0.0												233.162
Vapor Volumetric Flow	MCFH				0.0												0.00074657
Liquid Volumetric Flow	MMbbl/d				0.0												0.0160163
Std Vapor Volumetric Flow	MMSCFD				0.0												0.117889
Std Liquid Volumetric Flow	Mbbl/d				0.0												0.0159992
Compressibility					0.011												0.0108656
Specific Gravity					0.998												0.997748
API Gravity					10.0												10.0466
Enthalpy	MMBtu/h				0.0												-1.59076
Mass Enthalpy	Btu/lb				-6825.8												-6822.57
Mass Cp	Btu/(lb *F)				1.0												0.982795
Ideal Gas CpCv Ratio					1.326												1.32565
Dynamic Viscosity	cP				1.0												0.953984
Kinematic Viscosity	cSt				1.0												0.957043
Thermal Conductivity	Btu/(h-ft-°F)				0.3												0.348106
Surface Tension	lb/ft				0.005												0.00501403
Net IG Heating Value	Btu/ft^3				0.4												0.384812
Net Liquid Heating Value	Btu/lb				-1051.0												-1051.24
Gross IG Heating Value	Btu/ft^3				50.7												50.7185
Gross Liquid Heating Value	Btu/lb				9.1												8.9

Attachment J

Class I Legal Advertisement

Attachment J

Air Quality Permit Notice
Notice of Application
Maxwell Horizontal Pad
Antero Resources Corporation
Doddridge County, WV

Notice is given that Antero Resources Corporation has applied to the West Virginia Department of Environmental Protection, Division of Air Quality, for a General Permit Class II Administrative Update for a Natural Gas facility located near Co Rte 25/ Meathouse Fork Road and Brushy Fork/ Co Rte 56 in Doddridge County,WV.

The latitude and longitude coordinates are: 39.207694,-80.692583

The applicant estimates the increased potential to discharge the following Regulated Air Pollutants will be:

Pollutants	TOTALS (tpy):
VOC	13.0822
NO_X	1.0537
CO_{2e}	1,398.6191
CO	0.8851
SO_2	0.0063
$PM_{2.5}$	0.0801
PM_{10}	0.0933
Lead	5.2684E-06
Total HAPs	0.4770
Benzene	0.0026
Formaldehyde	0.0008
Xylenes	0.0711

Changes in operation to begin upon issuance of the permit. Written comments will be received by the West Virginia Department of Environmental Protection, Division of Air Quality, 601 57th Street, SE, Charleston, WV 25304, for at least 30 calendar days from the date of publication of this notice.

Any questions regarding this permit application should be directed to the DAQ at (304) 926-0499, extension 1227, during normal business hours.

Dated this the ____ day of_____, 2015

By: Antero Resources Corporation
Donald Gray
Environmental and Regulatory Manager
1615 Wynkoop St.
Denver, CO 80202

Attachment L

General Permit Registration Application Fee

Attachment O

Emissions Summary Sheet

Attachment O: G70-A Emissions Summary Sheet

Emission Points Data Summary Sheet

Table 1: Emissions Data

Emission Point ID No. *(Must match Emission Units Table & Plot Plan)*	Emission Point Type1	Emission Unit Vented Through This Point *(Must match Emission Units Table & Plot Plan)*		Air Pollution Control Device *(Must match Emission Units Table & Plot Plan)*		All Regulated Pollutants - Chemical Name/CAS3 *(Speciate VOCs & HAPS)*	Maximum Potential Uncontrolled Emissions 4		Maximum Potential Controlled Emissions 5		Emission Form or Phase *(At exit conditions, Solid, Liquid or Gas/Vapor)*	Est. Method Used 6
		ID No.	Source	ID No.	Device Type		lb/hr	ton/yr	lb/hr	ton/yr		
EP-H001, EP-H002, EP-H003	Vertical Stack	H001, H002, H003	Gas Production Unit Heater	N/A		CO (630080)	0.2021	0.8851	0.2021	0.8851	Gas/Vapor /Solid (for PM)	MB AP-42
						NOx (10102439)	0.2406	1.0537	0.2406	1.0537		
						Pb (7439-92-1)	1.20E-06	5.27E-06	1.20E-06	5.27E-06		
						CO2 Equivalent N2O (10024972), CO2 (124389), CH4 (74828)	290.4358	1272.1089	290.4358	1272.1089		
						SO2 (7446095)	0.0014	0.0063	0.0014	0.0063		
						PM, PM10, PM2.5	0.0183	0.0801	0.0183	0.0801		
						Benzene (71432)	5.05E-06	2.21E-05	5.05E-06	2.21E-05		
						Toluene (108883)	8.18E-06	3.58E-05	8.18E-06	3.58E-05		
						Hexane (110543)	0.0043	0.0190	0.0043	0.0190		
						Formaldehyde (50000)	0.0002	0.0008	0.0002	0.0008		
						2-Methylnaphthalene (91576)	5.77E-08	2.53E-07	5.77E-08	2.53E-07		
						Dichlorobenzene (95501)	2.89E-06	1.26E-05	2.89E-06	1.26E-05		
						Fluoranthene (206440)	7.22E-09	3.16E-08	7.22E-09	3.16E-08		
						Fluorene (86737)	6.74E-09	2.95E-08	6.74E-09	2.95E-08		
						Naphthalene (91203)	1.47E-06	6.43E-06	1.47E-06	6.43E-06		
						Phenanathrene (85018)	4.09E-08	1.79E-07	4.09E-08	1.79E-07		
						Total VOCs	0.0132	0.0580	0.0132	0.0580		
F001	n/a	F001	Fugitives	N/A		Benzene (71432)	0.0003	0.0014	0.0003	0.0014	Gas/Vapor	MB
						Toluene (108883)	0.0029	0.0126	0.0029	0.0126		
						Ethyl benzene (100414)	0.0059	0.0258	0.0059	0.0258		
						Hexane (110543)	0.0565	0.2474	0.0565	0.2474		
						o,m,p-xylenes (95476,108383,106423)	0.0147	0.0643	0.0147	0.0643		
						CO2 Equivalent CO2 (124389)), CH4	20.5337	89.9378	20.5337	89.9378		
						VOCs	1.1214	4.9117	1.1214	4.9117		
						TAPs (benzene)	0.0003	0.0014	0.0003	0.0014		

Attachment O: G70-A Emissions Summary Sheet

Emission Points Data Summary Sheet

Table 1: Emissions Data

Emission Point ID No. *(Must match Emission Units Table & Plot Plan)*	Emission Point Type1	Emission Unit Vented Through This Point *(Must match Emission Units Table & Plot Plan)*		Air Pollution Control Device *(Must match Emission Units Table & Plot Plan)*		All Regulated Pollutants - Chemical Name/CAS3 *(Speciate VOCs & HAPS)*	Maximum Potential Uncontrolled Emissions 4		Maximum Potential Controlled Emissions 5		Emission Form or Phase *(At exit conditions, Solid, Liquid or Gas/Vapor)*	Est. Method Used 6
		ID No.	Source	ID No.	Device Type		lb/hr	ton/yr	lb/hr	ton/yr		
EP-L001, EP-L002	n/a	L001, L002	Loading (Condensate), Loading (Water)	N/A		VOCs	4.7413	0.0048	4.7413	0.005	Gas/Vapor	MB
						toluene (108883)	7.75E-04	7.92E-07	7.75E-04	7.92E-07		
						ethyl benzene (100414)	9.98E-04	1.01E-06	9.98E-04	1.01E-06		
						hexane (110543)	0.0089	0.0000	0.0089	0.000		
						o,m,p-xylenes (95476,108383,106423)	0.0023	2.34E-06	0.0023	2.34E-06		
						CO2 Equivalent CO2 (124389), CH4	7.1616	0.0167	7.1616	0.017		
						benzene (71432)	1.38E-04	1.46E-07	1.38E-04	1.46E-07		
						TAPs (benzene)	1.38E-04	1.46E-07	1.38E-04	1.46E-07		
EP-HR001	n/a	HR001	Haul Truck	N/A		PM, PM10, PM2.5	2.027	0.059	1.0133	0.029	Solid	MB
EP-TANKCOND001-006,EP-TANKPW001 002	n/a	TANKCOND001-006,TANKPW001-002	Condensate Tank F/W/B, PW Tank F/W/B	N/A		CO (630080)	0.00E+00	0.00E+00	0.00E+00	0.00E+00	Gas/Vapor/ Solid (for PM)	MB AP-42
						NOx (10102439)	0.00E+00	0.00E+00	0.00E+00	0.00E+00		
						Pb (7439-92-1)	0.00E+00	0.00E+00	0.00E+00	0.00E+00		
						CO2 Equivalent N2O (10024972), CO2 (124389), CH4	5.5006	24.0928	5.5006	24.0928		
						SO2 (7446095)	0.00E+00	0.00E+00	0.00E+00	0.00E+00		
						PM, PM10, PM2.5	0.00E+00	0.00E+00	0.00E+00	0.00E+00		
						Benzene (71432)	3.42E-05	1.50E-04	3.42E-05	1.50E-04		
						Toluene (108883)	8.50E-05	3.72E-04	8.50E-05	3.72E-04		
						hexane (110543)	3.59E-05	0.0002	3.59E-05	0.0002		
						ethyl benzene (100414)	5.84E-05	2.56E-04	5.84E-05	2.56E-04		
						o,m,p-xylenes (95476,108383,106423)	1.14E-04	5.00E-04	1.14E-04	5.00E-04		
						VOCs	1.8083	7.9197	1.8083	7.9197		
EP-PCV	valve	PCV	Pneumatic CV	N/A		toluene (108883)	0.00E+00	0.00E+00	0.00E+00	0.00E+00	Gas/Vapor	MB
						ethyl benzene (100414)	0.00E+00	0.00E+00	0.00E+00	0.00E+00		
						hexane (110543)	0.0051	0.0224	0.0051	0.0224		
						o,m,p-xylenes (95476,108383,106423)	0.00E+00	0.00E+00	0.00E+00	0.00E+00		
						CO2 Equivalent CO2 (124389)), CH4	2.8454	12.4629	2.8454	12.4629		
						VOCs	0.0429	0.1880	0.0429	0.1880		
						TAPs (benzene, formaldehyde)	0.00E+00	0.00E+00	0.00E+00	0.00E+00		

Attachment C&O: G70-A Emissions Summary Sheet

Fugitive Emissions Data Summary Sheet

FUGITIVE EMISSIONS SUMMARY	All Regulated Pollutants Chemical Name/CAS 1	Maximum Potential Uncontrolled Emissions 2		Maximum Potential Controlled Emissions 3		Est. Method Used 4
		lb/hr	ton/yr	lb/hr	ton/yr	
Haul Road/Road Dust Emissions Paved Haul Roads	n/a					
Unpaved Haul Roads	PM, PM10, PM2.5	2.0266	0.0588	1.0133	0.0294	MB AP-42
Loading/Unloading Operations	VOCs	4.741	0.005	4.7413	0.0048	MB AP-42
	toluene (108883)	0.001	0.000	0.0008	0.0000	
	ethyl benzene (100414)	0.001	0.000	0.0010	0.0000	
	hexane (110543)	0.009	0.000	0.0089	0.0000	
	o,m,p-xylenes (95476,108383,106423)	0.002	0.000	0.0023	0.0000	
	CO2 Equivalent CO2 (124389), CH4	7.162	0.017	7.1616	0.0167	
	benzene (71432)	0.000	0.000	0.0001	0.0000	
	TAPs (benzene)	0.000	0.000	0.0001	0.0000	
Equipment Leaks (Components)	Benzene (71432)	Does not apply	0.0014	Does not apply	0.0014	MB AP-42
	Toluene (108883)		0.0126		0.0126	
	Ethyl benzene (100414)		0.0258		0.0258	
	Hexane (110543)		0.2474		0.2474	
	o,m,p-xylenes (95476,108383,106423)		0.0643		0.0643	
	CO2 Equivalent CO2 (124389)), CH4		89.9378		89.9378	
	VOCs		4.9117		4.9117	
	TAPs (benzene)		0.0014		0.0014	
Equipment Leaks (PCVs)	toluene (108883)	0.0000	0.0000	0.0000	0.0000	MB AP-42
	ethyl benzene (100414)	0.0000	0.0000	0.0000	0.0000	
	hexane (110543)	0.0051	0.0224	0.0051	0.0224	
	o,m,p-xylenes (95476,108383,106423)	0.0000	0.0000	0.0000	0.0000	
	CO2 Equivalent CO2 (124389)), CH4	2.8454	12.4629	2.8454	12.4629	
	VOCs	0.0429	0.1880	0.0429	0.1880	
	TAPs (benzene, formaldehyde)	0.0000	0.0000	0.0000	0.0000	

1 List all regulated air pollutants. Speciate VOCs, including all HAPs. Follow chemical name with Chemical Abstracts Service (CAS) number. LIST Acids, CO, CS_2, VOCs, H_2S, Inorganics, Lead, Organics, O_3, NO, NO_2, SO_2, SO_3, all applicable Greenhouse Gases (including CO_2 and methane), etc. DO NOT LIST H_2, H_2O, N_2, O_2, and Noble Gases.

2 Give rate with no control equipment operating. If emissions occur for less than 1 hr, then record emissions per batch in minutes (e.g. 5 lb VOC/20 minute batch).

3 Give rate with proposed control equipment operating. If emissions occur for less than 1 hr, then record emissions per batch in minutes (e.g. 5 lb VOC/20 minute batch).

4 Indicate method used to determine emission rate as follows: MB = material balance; ST = stack test (give date of test); EE = engineering estimate; O = other (specify).