SWN PRODUCTION COMPANY, LLC

STATE OF WV DNR B PAD

CLASS I ADMINISTRATIVE UPDATE APPLICATION

SUBMITTED TO WVDEP DIVISION OF AIR QUALITY
DECEMBER 2016

TABLE OF CONTENTS

TABLE OF CONTENTS i

INTRODUCTION 1

Proposed Emissions 1

WVDEP APPLICATION FOR NSR PERMIT 3

ATTACHMENT A: BUSINESS REGISTRATION CERTIFICATE 8

ATTACHMENT B: MAPS 10

ATTACHMENT C: INSTALLATION/START-UP SCHEDULE 12

ATTACHMENT D: REGULATORY DISCUSSION 13

ATTACHMENT E: PLOT PLAN 17

ATTACHMENT F: PROCESS FLOW DIAGRAM 19

ATTACHMENT G: PROCESS DESCRIPTION 21

ATTACHMENT I: EMISSION UNITS TABLE 22

ATTACHMENT J: EMISSION POINTS DATA SUMMARY SHEET 24

ATTACHMENT K: FUGITIVE EMISSIONS DATA SUMMARY SHEET 31

ATTACHMENT L: EMISSION UNIT DATA SHEETS 35

ATTACHMENT M: AIR POLLUTION CONTROL DEVICE SHEET 60

ATTACHMENT N: SUPPORTING EMISSIONS CALCULATIONS 65

APPENDIX A: SUPPORT DOCUMENTS 93

INTRODUCTION

SWN Production Company, LLC (SWN), submits the enclosed application for a Class I Update to Permit No. R13-2987C issued on October 8, 2014. SWN proposes to remove the existing permitted 23.6-hp Kubota DG972-E2 flash gas compressor engine (EU-ENG2), three (3) condensate tanks, three (3) produced water tanks, and two (2) 1.5-mmBtu/hr natural gas-fired line heaters (EU-LH1 and EU-LH2) and to revise tank emissions. As a result of these changes, truck loading, combustor, fugitive, and haul road emissions have also been updated. This project involves the removal of equipment and a decrease in emissions therefore it qualifies as a Class I Administrative Update.

Equipment Description

Permitted equipment includes two (2) 1.0-mmBtu/hr natural gas-fired GPU burners (EU-GPU1 and EU-GPU2), one (1) 0.5-mmBtu/hr natural gas-fired heater treater (EU-HT1), three (3) 400-bbl condensate storage tanks (collectively known as EU-TANKS-COND), three (3) 400-bbl produced water storage tanks (collectively known as EU-TANKS-PW), condensate truck loading (EU-LOAD-COND), produced water truck loading (EU-LOAD-PW), one (1) 15.0-mmBtu/hr vapor combustor (APC-COMB-TKLD) with one (1) 50-SCFH natural gas-fired pilot (EU-PILOT), associated fugitive emissions (EU-FUG) and fugitive haul road emissions (EU-HR).

Note that other small storage tanks may be present on site (i.e., methanol, lube oil) but are considered de minimis sources per Table 45-13B and are not addressed further in this application.

Proposed Emissions

Emissions calculations for the project are presented in Attachment N. All other equipment will remain as permitted and are not addressed further in this application.

Condensate tank emissions were calculated in the EPA TANKS 4.0.9d model using Gasoline RVP 15 as the tank contents. Although produced water storage tanks contain primarily water, the produced water tank emissions were calculated using Gasoline RVP 15 as 100% of the throughput to provide a conservative emissions estimate per the WVDEQ's request. Flashing emissions were calculated using ProMax process simulation software. Condensate and produced water loading have been calculated using the properties from EPA TANKS 4.0.9d and process simulation. Tank emissions are routed to a vapor combustor with 100% capture efficiency and 98% destruction efficiency.

Fugitive emissions were calculated with a component count by equipment type from a similar facility, and representative extended gas and liquids analyses. Fugitive haul road emissions were calculated using EPA/AP-42 methodologies.

Greenhouse gas emissions were calculated with the latest EPA factors and manufacturer data when available. Documents used as references for the emissions calculations, including AP-42 and EPA emission factor references, gas and liquids analyses, process simulation results, and EPA TANKS 4.0.9d Emissions Report are included in Appendix A.

The following changes are included in this application:

- One (1) 23.6-hp Kubota DG972 compressor engine that was previously authorized has been removed from the equipment representation.
- Two (2) 1.5-mmBtu/hr natural gas-fired line heaters that were previously authorized have been removed from the equipment representation.
- Three (3) condensate tanks that were previously authorized have been removed from the equipment representation.
- Three (3) produced water tanks that were previously authorized have been removed from the equipment representation.
- The condensate throughput estimate has been revised from 125 bbl/d to 61.5 bbl/d.
- The produced water throughput estimate has been revised from 100 bbl/d to 5 bbl/d.
- The condensate flash emission factor has been revised from 4.39 lb/bbl to 25.96 lb/bbl based on an updated process simulation report.
- The produced water flash emission factor has been revised from 0.0172 lb/bbl to 0.0272 lb/bbl based on an updated process simulation report.
- The tank vapor capture efficiency has been revised from 98% to 100%.
- The low pressure tower has been removed from the equipment representation.
- Truck loading emissions have been revised based on the change in condensate and produced water composition and throughput.
- Combustor emissions have been revised based on the change in condensate and produced water composition and throughput.
- Fugitive component counts have been revised based on the equipment changes.
- Fugitive haul road estimates have been revised based on the change in condensate and produced water throughput.

WVDEP APPLICATION FOR NSR PERMIT

WEST VIRGINIA DEPARTMENT OF ENVIRONMENTAL PROTECTION **DIVISION OF AIR QUALITY** 601 57th Street, SE Charleston, WV 25304 (304) 926-0475 www.dep.wv.gov/daq	***APPLICATION FOR NSR PERMIT*** ***AND*** ***TITLE V PERMIT REVISION*** ***(OPTIONAL)***
PLEASE CHECK ALL THAT APPLY TO **NSR (45CSR13)** (IF KNOWN): ☐ **CONSTRUCTION** ☐ **MODIFICATION** ☐ **RELOCATION** ☒ **CLASS I ADMINISTRATIVE UPDATE** ☐ **TEMPORARY** ☐ **CLASS II ADMINISTRATIVE UPDATE** ☐ **AFTER-THE-FACT**	PLEASE CHECK TYPE OF **45CSR30 (TITLE V)** REVISION (IF ANY): ☐ **ADMINISTRATIVE AMENDMENT** ☐ **MINOR MODIFICATION** ☐ **SIGNIFICANT MODIFICATION** IF ANY BOX ABOVE IS CHECKED, INCLUDE TITLE V REVISION INFORMATION AS **ATTACHMENT S** TO THIS APPLICATION

FOR TITLE V FACILITIES ONLY: Please refer to "Title V Revision Guidance" in order to determine your Title V Revision options (Appendix A, "Title V Permit Revision Flowchart") and ability to operate with the changes requested in this Permit Application.

Section I. General

1. Name of applicant *(as registered with the WV Secretary of State's Office):* SWN Production Company, LLC	2. Federal Employer ID No. ***(FEIN):*** 26-4388727
3. Name of facility *(if different from above):* State of WV DNR B Pad	4. The applicant is the: ☐ **OWNER** ☐ **OPERATOR** ☒ **BOTH**
5A. Applicant's mailing address: 10000 Energy Drive Spring, TX 77389	5B. Facility's present physical address: Brooke County, West Virginia – near the town of Colliers

6. **West Virginia Business Registration.** Is the applicant a resident of the State of West Virginia? ☒ **YES** ☐ **NO**

- If **YES,** provide a copy of the **Certificate of Incorporation/Organization/Limited Partnership** (one page) including any name change amendments or other Business Registration Certificate as **Attachment A.**
- If **NO,** provide a copy of the **Certificate of Authority/Authority of L.L.C./Registration** (one page) including any name change amendments or other Business Certificate as **Attachment A.**

7. If applicant is a subsidiary corporation, please provide the name of parent corporation: Southwestern Energy

8. Does the applicant own, lease, have an option to buy or otherwise have control of the *proposed site?* ☒ **YES** ☐ **NO**

- If **YES,** please explain: SWN is leasing the land on which the site is constructed
- If **NO,** you are not eligible for a permit for this source.

9. Type of plant or facility (stationary source) to be **constructed, modified, relocated, administratively updated** or **temporarily permitted** (e.g., coal preparation plant, primary crusher, etc.): Oil and natural gas production well pad	10. North American Industry Classification System **(NAICS)** code for the facility: 211111
11A. DAQ Plant ID No. (for existing facilities only): 009 - 00108	11B. List all current 45CSR13 and 45CSR30 (Title V) permit numbers associated with this process (for existing facilities only): R13-2987C

All of the required forms and additional information can be found under the Permitting Section of DAQ's website, or requested by phone.

12A.

– For **Modifications, Administrative Updates** or **Temporary permits** at an existing facility, please provide directions to the *present location* of the facility from the nearest state road;

For **Construction** or **Relocation permits,** please provide directions to the *proposed new site location* from the nearest state road. Include a **MAP** as **Attachment B**.

From I-70 take Exit 1A to SR-2 North. Travel SR-2 North for 19.8 miles to Alt. SR-27 intersection and turn right on Alt SR-27. Travel 5.3 miles to intersection of Alt SR-27 and CR-16, (Tent Church Rd), and turn right on CR-16. Travel CR-16 for 0.7 miles to CR-7/4,(Quinn Lane), and turn left on CR-7/4. Travel 0.2 miles on CR-7/4 for 0.2 mile to access road on left.

12B. New site address (if applicable):	12C. Nearest city or town:	12D. County:
185 Quinn Lane Colliers	Colliers	Brooke
12.E. UTM Northing (KM): 4,465.69168	12F. UTM Easting (KM): 540.09198	12G. UTM Zone: 17T

13. Briefly describe the proposed change(s) at the facility:
With this application, SWN requests to remove one engine, six tanks, and two line heaters and to revise tank emissions. As a result of these changes, truck loading, combustor, fugitive, and haul road emissions have also been updated.

14A. Provide the date of anticipated installation or change: Immediately upon permit issuance – If this is an **After-The-Fact** permit application, provide the date upon which the proposed change did happen: / /	14B. Date of anticipated Start-Up if a permit is granted: N/A – Existing sources subject of permit action

14C. Provide a **Schedule** of the planned **Installation** of/**Change** to and **Start-Up** of each of the units proposed in this permit application as **Attachment C** (if more than one unit is involved).

15. Provide maximum projected **Operating Schedule** of activity/activities outlined in this application:
Hours Per Day 24 Days Per Week 7 Weeks Per Year 52

16. Is demolition or physical renovation at an existing facility involved? ☒ **YES** ☐ **NO**

17. **Risk Management Plans.** If this facility is subject to 112(r) of the 1990 CAAA, or will become subject due to proposed changes (for applicability help see www.epa.gov/ceppo), submit your **Risk Management Plan (RMP)** to U. S. EPA Region III.

18. **Regulatory Discussion.** List all Federal and State air pollution control regulations that you believe are applicable to the proposed process *(if known)*. A list of possible applicable requirements is also included in Attachment S of this application (Title V Permit Revision Information). Discuss applicability and proposed demonstration(s) of compliance *(if known)*. Provide this information as **Attachment D.**

Section II. Additional attachments and supporting documents.

19. Include a check payable to WVDEP – Division of Air Quality with the appropriate **application fee** (per 45CSR22 and 45CSR13).

20. Include a **Table of Contents** as the first page of your application package.

21. Provide a **Plot Plan,** e.g. scaled map(s) and/or sketch(es) showing the location of the property on which the stationary source(s) is or is to be located as **Attachment E** (Refer to ***Plot Plan Guidance***) .

– Indicate the location of the nearest occupied structure (e.g. church, school, business, residence).

22. Provide a **Detailed Process Flow Diagram(s)** showing each proposed or modified emissions unit, emission point and control device as **Attachment F.**

23. Provide a **Process Description** as **Attachment G.**

– Also describe and quantify to the extent possible all changes made to the facility since the last permit review (if applicable).

All of the required forms and additional information can be found under the Permitting Section of DAQ's website, or requested by phone.

24. Provide **Material Safety Data Sheets (MSDS)** for all materials processed, used or produced as **Attachment H.**

– For chemical processes, provide a MSDS for each compound emitted to the air.

25. Fill out the **Emission Units Table** and provide it as **Attachment I.**

26. Fill out the **Emission Points Data Summary Sheet (Table 1 and Table 2)** and provide it as **Attachment J.**

27. Fill out the **Fugitive Emissions Data Summary Sheet** and provide it as **Attachment K.**

28. Check all applicable **Emissions Unit Data Sheets** listed below:

☒ Bulk Liquid Transfer Operations
☒ Chemical Processes
☐ Concrete Batch Plant
☐ Grey Iron and Steel Foundry
☐ General Emission Unit, specify:
☒ Haul Road Emissions
☐ Hot Mix Asphalt Plant
☐ Incinerator
☐ Indirect Heat Exchanger
☐ Quarry
☐ Solid Materials Sizing, Handling and Storage Facilities
☒ Storage Tanks

Fill out and provide the **Emissions Unit Data Sheet(s)** as **Attachment L.**

29. Check all applicable **Air Pollution Control Device Sheets** listed below:

☐ Absorption Systems
☐ Adsorption Systems
☐ Afterburner
☐ Baghouse
☐ Condenser
☐ Electrostatic Precipitator
☒ Flare (VAPOR COMBUSTOR)
☐ Mechanical Collector
☐ Wet Collecting System
☐ Other Collectors, specify

Fill out and provide the **Air Pollution Control Device Sheet(s)** as **Attachment M.**

30. Provide all **Supporting Emissions Calculations** as **Attachment N,** or attach the calculations directly to the forms listed in Items 28 through 31.

31. **Monitoring, Recordkeeping, Reporting and Testing Plans.** Attach proposed monitoring, recordkeeping, reporting and testing plans in order to demonstrate compliance with the proposed emissions limits and operating parameters in this permit application. Provide this information as **Attachment O.**

➢ Please be aware that all permits must be practically enforceable whether or not the applicant chooses to propose such measures. Additionally, the DAQ may not be able to accept all measures proposed by the applicant. If none of these plans are proposed by the applicant, DAQ will develop such plans and include them in the permit.

32. **Public Notice.** At the time that the application is submitted, place a **Class I Legal Advertisement** in a newspaper of general circulation in the area where the source is or will be located (See 45CSR§13-8.3 through 45CSR§13-8.5 and ***Example Legal Advertisement*** for details). Please submit the **Affidavit of Publication** as **Attachment P** immediately upon receipt.

33. **Business Confidentiality Claims.** Does this application include confidential information (per 45CSR31)?

☐ **YES** ☒ **NO**

➢ If **YES,** identify each segment of information on each page that is submitted as confidential and provide justification for each segment claimed confidential, including the criteria under 45CSR§31-4.1, and in accordance with the DAQ's ***"Precautionary Notice – Claims of Confidentiality"*** guidance found in the ***General Instructions*** as **Attachment Q.**

Section III. Certification of Information

34. **Authority/Delegation of Authority.** Only required when someone other than the responsible official signs the application. Check applicable **Authority Form** below:

☐ Authority of Corporation or Other Business Entity
☐ Authority of Governmental Agency
☐ Authority of Partnership
☐ Authority of Limited Partnership

Submit completed and signed **Authority Form** as **Attachment R.**

All of the required forms and additional information can be found under the Permitting Section of DAQ's website, or requested by phone.

35A. **Certification of Information.** To certify this permit application, a Responsible Official (per 45CSR§13-2.22 and 45CSR§30-2.28) or Authorized Representative shall check the appropriate box and sign below.

Certification of Truth, Accuracy, and Completeness

I, the undersigned ☒ **Responsible Official** / ☐ **Authorized Representative,** hereby certify that all information contained in this application and any supporting documents appended hereto, is true, accurate, and complete based on information and belief after reasonable inquiry I further agree to assume responsibility for the construction, modification and/or relocation and operation of the stationary source described herein in accordance with this application and any amendments thereto, as well as the Department of Environmental Protection, Division of Air Quality permit issued in accordance with this application, along with all applicable rules and regulations of the West Virginia Division of Air Quality and W.Va. Code § 22-5-1 et seq. (State Air Pollution Control Act). If the business or agency changes its Responsible Official or Authorized Representative, the Director of the Division of Air Quality will be notified in writing within 30 days of the official change.

Compliance Certification

Except for requirements identified in the Title V Application for which compliance is not achieved, I, the undersigned hereby certify that, based on information and belief formed after reasonable inquiry, all air contaminant sources identified in this application are in compliance with all applicable requirements.

SIGNATURE Carla Suszkowski *(Please use blue ink)* DATE: 12-6-16 *(Please use blue ink)*

35B. Printed name of signee: Carla Suszkowski		35C. Title: P.E., Regulatory Manager
35D. E-mail: Carla_Suszkowski@SWN.com	36E. Phone: 832-796-1000	36F. FAX: 405-849-3102
36A. Printed name of contact person (if different from above):		36B. Title:
36C. E-mail:	36D. Phone:	36E. FAX:

PLEASE CHECK ALL APPLICABLE ATTACHMENTS INCLUDED WITH THIS PERMIT APPLICATION:

- ☒ **Attachment A: Business Certificate**
- ☒ **Attachment B: Map(s)**
- ☒ **Attachment C: Installation and Start Up Schedule**
- ☒ **Attachment D: Regulatory Discussion**
- ☒ **Attachment E: Plot Plan**
- ☒ **Attachment F: Detailed Process Flow Diagram(s)**
- ☒ **Attachment G: Process Description**
- ☐ **Attachment H: Material Safety Data Sheets (MSDS)**
- ☒ **Attachment I: Emission Units Table**
- ☒ **Attachment J: Emission Points Data Summary Sheet**
- ☒ **Attachment K: Fugitive Emissions Data Summary Sheet**
- ☒ **Attachment L: Emissions Unit Data Sheet(s)**
- ☒ **Attachment M: Air Pollution Control Device Sheet(s)**
- ☒ **Attachment N: Supporting Emissions Calculations**
- ☐ **Attachment O: Monitoring/Recordkeeping/Reporting/Testing Plans**
- ☐ **Attachment P: Public Notice**
- ☐ **Attachment Q: Business Confidential Claims**
- ☐ **Attachment R: Authority Forms**
- ☐ **Attachment S: Title V Permit Revision Information**
- ☐ **Application Fee**

Please mail an original and three (3) copies of the complete permit application with the signature(s) to the DAQ, Permitting Section, at the address listed on the first page of this application. Please DO NOT fax permit applications.

FOR AGENCY USE ONLY – IF THIS IS A TITLE V SOURCE:

- ☐ ***Forward 1 copy of the application to the Title V Permitting Group and:***
- ☐ ***For Title V Administrative Amendments:***
  - ☐ ***NSR permit writer should notify Title V permit writer of draft permit,***
- ☐ ***For Title V Minor Modifications:***
  - ☐ ***Title V permit writer should send appropriate notification to EPA and affected states within 5 days of receipt,***
  - ☐ ***NSR permit writer should notify Title V permit writer of draft permit.***
- ☐ ***For Title V Significant Modifications processed in parallel with NSR Permit revision:***
  - ☐ ***NSR permit writer should notify a Title V permit writer of draft permit,***
  - ☐ ***Public notice should reference both 45CSR13 and Title V permits,***
  - ☐ ***EPA has 45 day review period of a draft permit.***

All of the required forms and additional information can be found under the Permitting Section of DAQ's website, or requested by phone.

ATTACHMENT A: BUSINESS REGISTRATION CERTIFICATE

WEST VIRGINIA
STATE TAX DEPARTMENT
BUSINESS REGISTRATION
CERTIFICATE

ISSUED TO:
SWN PRODUCTION COMPANY, LLC
5400D BIG TYLER RD
CHARLESTON, WV 25313-1103

BUSINESS REGISTRATION ACCOUNT NUMBER: **2307-3731**

This certificate is issued on: 12/8/2014

This certificate is issued by the West Virginia State Tax Commissioner in accordance with Chapter 11, Article 12, of the West Virginia Code

The person or organization identified on this certificate is registered to conduct business in the State of West Virginia at the location above.

This certificate is not transferrable and must be displayed at the location for which issued.

This certificate shall be permanent until cessation of the business for which the certificate of registration was granted, or until it is suspended, revoked or cancelled by the Tax Commissioner.

Change in name or change of location shall be considered a cessation of the business and a new certificate shall be required.

TRAVELING/STREET VENDORS: Must carry a copy of this certificate in every vehicle operated by them.
CONTRACTORS, DRILLING OPERATORS, TIMBER/LOGGING OPERATIONS: Must have a copy of this certificate displayed at every job site within West Virginia.

atl.006 v.4
L1180094016

ATTACHMENT B: MAPS

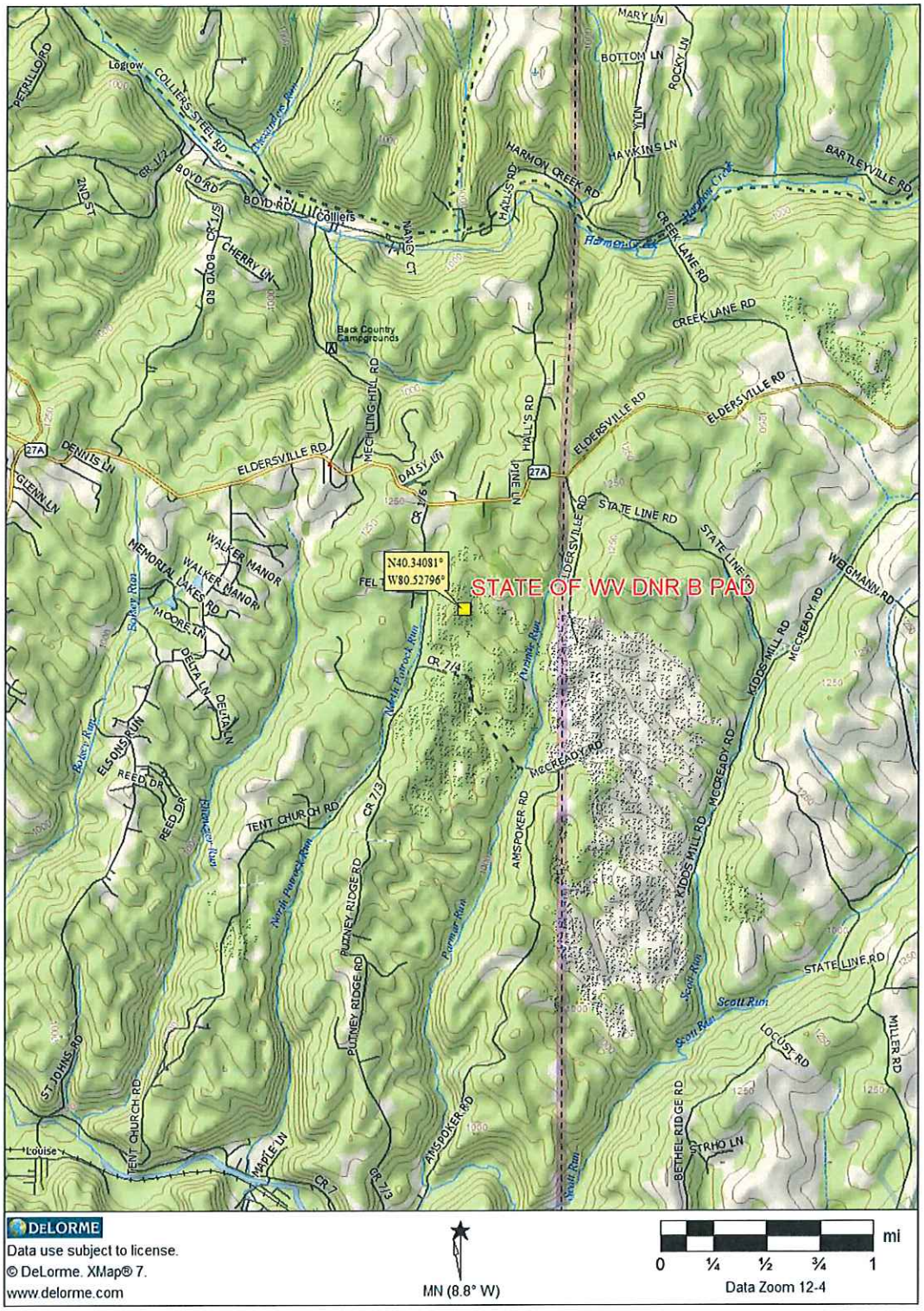

DELORME
Data use subject to license.
© DeLorme. XMap® 7.
www.delorme.com

MN (8.8° W)

0 ¼ ½ ¾ 1 mi
Data Zoom 12-4

SWN Production Company, LLC
State of WV DNR B Pad
Attachment B: Area Map
December 2016

ATTACHMENT C: INSTALLATION/START-UP SCHEDULE

No new installation is proposed in this application.

ATTACHMENT D: REGULATORY DISCUSSION

STATE

45 CSR 13 - PERMITS FOR CONSTRUCTION, MODIFICATION, RELOCATION AND OPERATION OF STATIONARY SOURCES OF AIR POLLUTANTS, NOTIFICATION REQUIREMENTS, ADMINISTRATIVE UPDATES, TEMPORARY PERMITS, GENERAL PERMITS, AND PROCEDURES FOR EVALUATION:

Potential emissions associated with the proposed project are less than the minor source construction or modification permit thresholds of 6 pounds per hour (pph) AND 10 tons per year (tpy) of any regulated air pollutant OR 144 pounds per day (ppd) of any regulated air pollutant OR 2 pph OR 5 tpy of aggregated hazardous air pollutants (HAP) OR 45 CSR 27 toxic air pollutant (TAP) (10% increase if above BAT triggers or increase to Best Available Technology (BAT) triggers). This project results in a decrease in emissions and removal of equipment therefore it qualifies as a Class I Administrative Amendment.

45 CSR 22 - AIR QUALITY MANAGEMENT FEE PROGRAM:

The facility will be required to maintain a valid Certificate to Operate on the premises.

45 CSR 30 - REQUIREMENTS FOR OPERATING PERMITS:

Emissions from the facility do not exceed major source thresholds; therefore, this rule does not apply.

FEDERAL

40 CFR PART 60 SUBPART KB—STANDARDS OF PERFORMANCE FOR VOLATILE ORGANIC LIQUID STORAGE VESSELS (INCLUDING PETROLEUM LIQUID STORAGE VESSELS) FOR WHICH CONSTRUCTION, RECONSTRUCTION, OR MODIFICATION COMMENCED AFTER JULY 23, 1984

The affected facility to which this Subpart applies is each storage vessel with a capacity greater than or equal to 75 cubic meters (m^3) that is used to store volatile organic liquids (VOL) for which construction, reconstruction, or modification is commenced after July 23, 1984. The tanks at this facility were constructed after the effective date of this Subpart but are less than 75 m^3 (which equals approximately 471 bbl); therefore, this Subpart does not apply.

40 CFR PART 60 SUBPART KKK - STANDARDS OF PERFORMANCE FOR STATIONARY FOR EQUIPMENT LEAKS OF VOC FROM ONSHORE NATURAL GAS PROCESSING PLANTS:

The facility is not considered an affected source (natural gas processing plant) and is therefore not subject to this Subpart.

40 CFR PART 60 SUBPART IIII - STANDARDS OF PERFORMANCE FOR STATIONARY COMPRESSION IGNITION INTERNAL COMBUSTION ENGINES:

The facility does not contain the affected source (diesel-fired engine) and is therefore not subject to this Subpart.

40 CFR PART 60 SUBPART JJJJ - STANDARDS OF PERFORMANCE FOR STATIONARY SPARK IGNITION INTERNAL COMBUSTION ENGINES:

The facility does not contain the affected source (natural gas-fired engine) and is therefore not subject to this Subpart.

40 CFR PART 60 SUBPART OOOO - STANDARDS OF PERFORMANCE FOR CRUDE OIL AND NATURAL GAS PRODUCTION, TRANSMISSION, AND DISTRIBUTION:

The emission sources affected by this Subpart include well completions, pneumatic controllers, equipment leaks from natural gas processing plants, sweetening units at natural gas processing plants, reciprocating compressors, centrifugal compressors and storage vessels which are constructed, modified or reconstructed after August 23, 2011 and before September 18, 2015.

Pneumatic controllers affected by this Subpart include continuous bleed, natural gas-driven pneumatic controllers with a natural gas bleed rate greater than 6 SCFH. No pneumatic devices with a continuous bleed greater than 6 SCFH are installed or in service at this facility.

Storage vessels affected by this Subpart include those with VOC emissions greater than 6 TPY. Emissions from the storage vessels at this facility are less than 6 TPY each.

40 CFR PART 60 SUBPART OOOOA - STANDARDS OF PERFORMANCE FOR CRUDE OIL AND NATURAL GAS FACILITIES FOR WHICH CONSTRUCTION, MODIFICATION, OR RECONSTRUCTION COMMENCED AFTER SEPTEMBER 18, 2015:

The emission sources affected by this Subpart include well completions, centrifugal compressors, reciprocating compressors, pneumatic controllers, storage vessels, fugitive sources at well sites, fugitive sources at compressor stations, pneumatic pumps, equipment leaks from natural gas processing plants and sweetening units at natural gas processing plants which are constructed,

modified or reconstructed after September 18, 2015. The emission sources at this facility were manufactured prior to the effective date of this Subpart and are not subject.

40 CFR PART 63 SUBPART HH - NATIONAL EMISSION STANDARDS FOR HAZARDOUS AIR POLLUTANTS FOR SOURCE CATEGORIES FROM OIL AND NATURAL GAS PRODUCTION FACILITIES:

The site is a minor (area) source of hazardous air pollutants. This Subpart applies to affected emission points that are located at facilities that are major and area sources of HAP, and either process, upgrade, or store hydrocarbon liquids prior to custody transfer or that process, upgrade, or store natural gas prior to entering the natural gas transmission and storage source category. For purposes of this Subpart natural gas enters the natural gas transmission and storage source category after the natural gas processing plant, if present. The facility is a minor (area) source of HAP; however, there is no triethylene glycol (TEG) dehydration unit present at the facility and therefore this Subpart does not apply.

40 CFR PART 63 SUBPART HHH - NATIONAL EMISSION STANDARDS FOR HAZARDOUS AIR POLLUTANTS FOR SOURCE CATEGORIES FROM NATURAL TRANSMISSION AND STORAGE FACILITIES:

The facility is not a natural gas transmission and storage facility and is therefore not subject to this Subpart.

40 CFR PART 63 SUBPART ZZZZ - NATIONAL EMISSION STANDARDS FOR HAZARDOUS AIR POLLUTANTS FOR SOURCE CATEGORIES FROM STATIONARY RECIPROCATING INTERNAL COMBUSTION ENGINES - AREA SOURCE:

The original rule, published on February 26, 2004, initially affected new (constructed or reconstructed after December 19, 2002) reciprocating internal combustion engines (RICE) with a site-rating greater than 500 brake horsepower (HP) located at a major source of HAP emissions. On January 18, 2008, EPA published an amendment that promulgated standards for RICE constructed or reconstructed after June 12, 2006 with a site rating less than or equal to 500 HP located at major sources, and for engines constructed and reconstructed after June 12, 2006 located at area sources. On August 10, 2010, EPA published another amendment that promulgated standards for existing (constructed or reconstructed before June 12, 2006) RICE at area sources and existing RICE (constructed or reconstructed before June 12, 2006) with a site rating of less than or equal to 500 HP at major sources.

Owners and operators of new or reconstructed engines at area sources must meet the requirements of Subpart ZZZZ by complying with either 40 CFR Part 60 Subpart IIII (for CI engines) or 40 CFR Part 60 Subpart JJJJ (for SI engines). Based on emission calculations, this facility is a minor source of HAP. The facility does not contain any affected sources and is therefore not subject to this Subpart.

ATTACHMENT E: PLOT PLAN

Please note that the simple plot plan provided is only a representation of production/emissions equipment to be installed. Actual location specifications and equipment placement are not to scale.

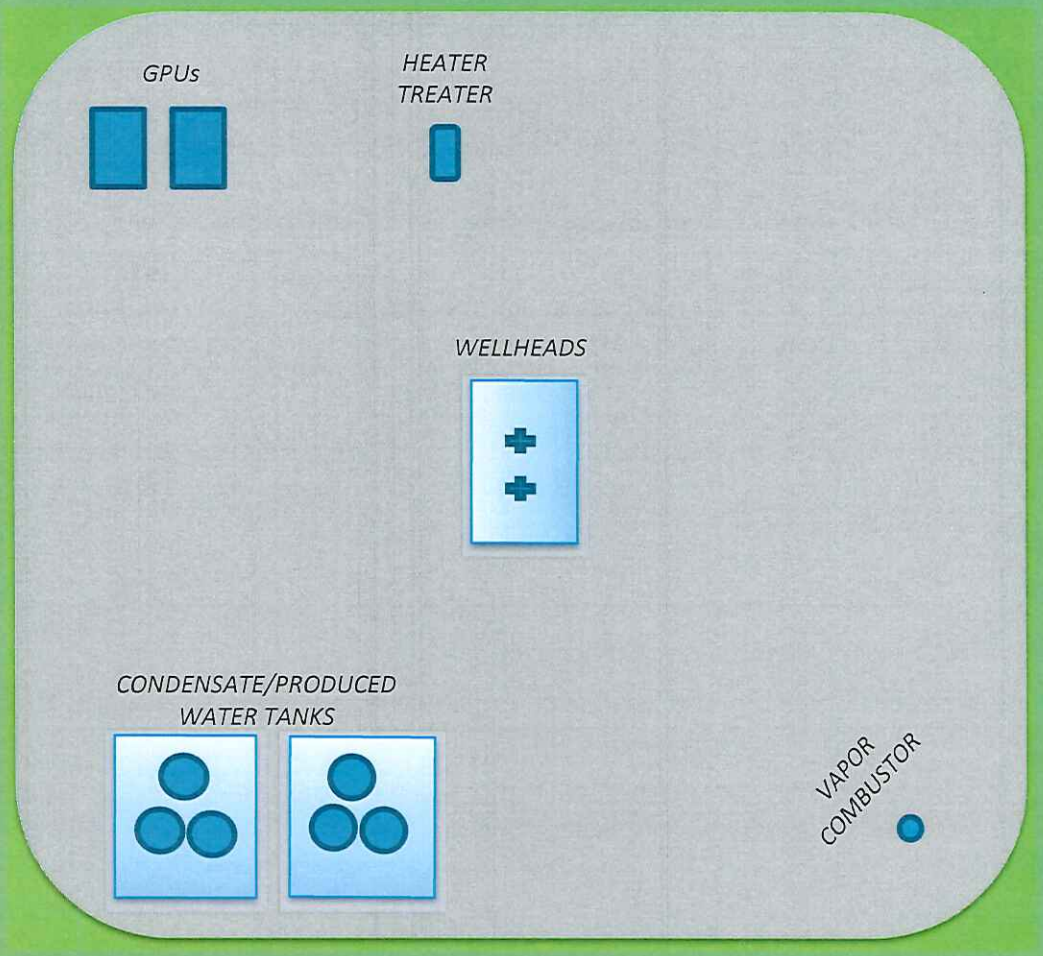

***NOTE**: Image is only a representation of production/emissions equipment to be installed. Actual location specifications and equipment placement are not to scale.*

SWN Production Company, LLC
State of WV DNR B Pad
Attachment E: Simple Plot Plan
December 2016

ATTACHMENT F: PROCESS FLOW DIAGRAM

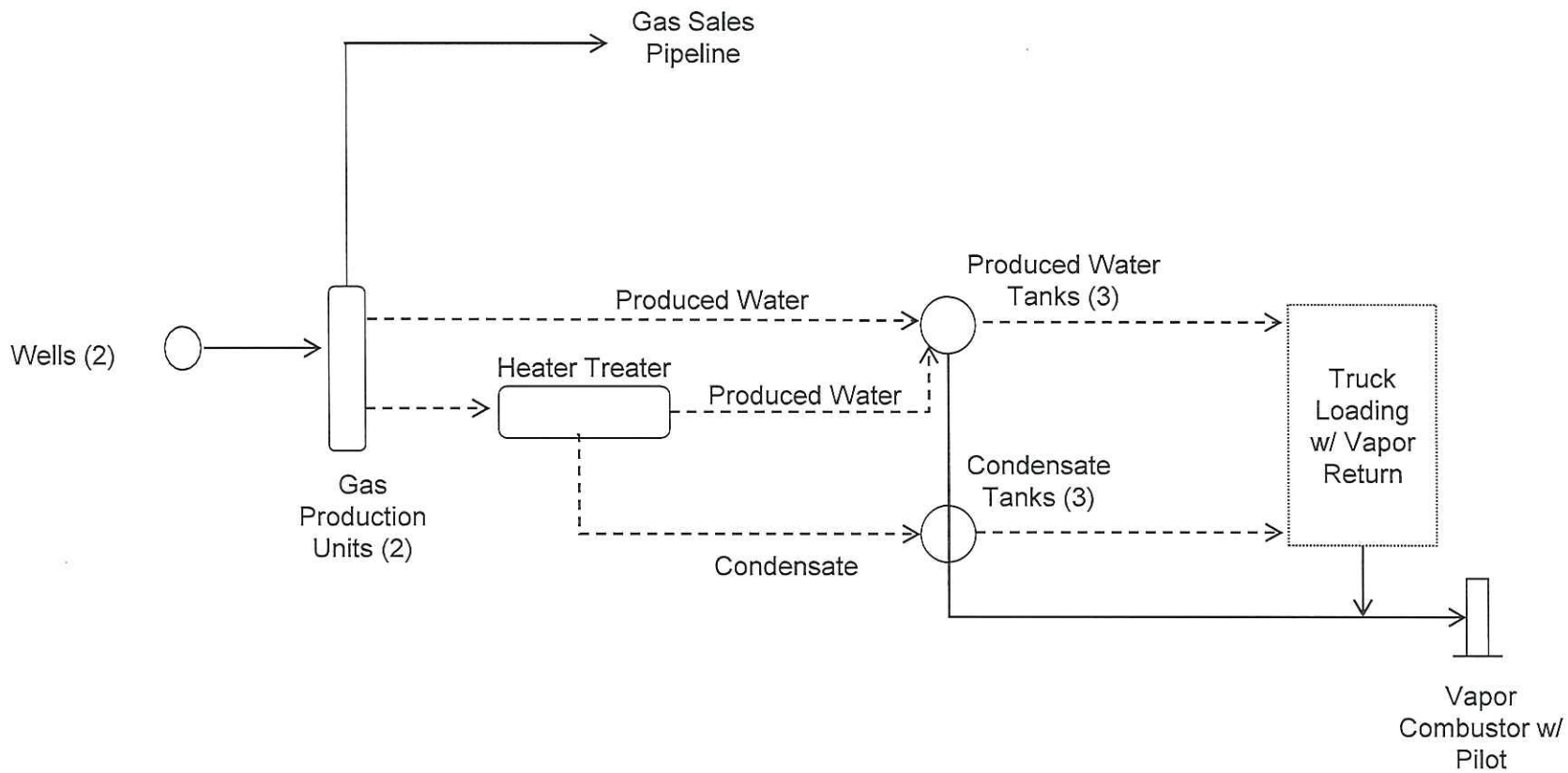

Gas/Vapor

Liquids (Condensate and Produced Water)

Note: Drawing is a depiction of general facility process and is not intended to represent facility and/or equipment layout.

SWN Production Company, LLC
State of WV DNR B Pad
Attachment F: Process Flow Diagram
December 2016

ATTACHMENT G: PROCESS DESCRIPTION

The facility is an oil and natural gas exploration and production facility, responsible for the production of condensate and natural gas. Storage of condensate and produced water also occurs on-site. A description of the facility process is as follows: Condensate, gas and water come from the two (2) wellheads to the production units, where the first stage of separation occurs. Produced water is sent to the produced water tanks while condensate is sent to the heater treater. Produced water from the heater treater flows into the produced water storage tanks. Condensate flows into the condensate storage tanks.

The natural gas stream exits the facility for transmission via pipeline. Condensate and produced water are transported offsite via truck. Loading emissions are controlled with vapor return, which has at least 70% capture efficiency, and are routed to the vapor combustor for at least 98% destruction efficiency. Working, breathing and flashing vapors from the condensate and produced water storage tanks are routed to the vapor combustor with a 100% capture efficiency to be burned with at least 98% combustion efficiency. The vapor combustor has one (1) natural gas-fired pilot to ensure a constant flame for combustion.

A process flow diagram reflecting facility operations is shown in Attachment F.

ATTACHMENT I: EMISSION UNITS TABLE

Attachment I

Emission Units Table

(includes all emission units and air pollution control devices that will be part of this permit application review, regardless of permitting status)

Emission Unit ID[1]	Emission Point ID[2]	Emission Unit Description	Year Installed/ Modified	Design Capacity	Type[3] and Date of Change	Control Device[4]
EU-ENG2	EP-ENG2	Kubota DG972-E2 Engine	2014	23.6-hp	Removal	N/A
EU-GPU1	EP-GPU1	GPU Burner	2013	1.0-mmBtu/hr	N/A	N/A
EU-GPU2	EP-GPU2	GPU Burner	2013	1.0-mmBtu/hr	N/A	N/A
EU-HT1	EP-HT1	Heater Treater	2013	0.5-mmBtu/hr	N/A	N/A
EU-LH1	EP-LH1	Line Heater	2013	1.5-mmBtu/hr	Removal	N/A
EU-LH2	EP-LH2	Line Heater	2013	1.5-mmBtu/hr	Removal	N/A
EU-TANKS-COND	EP-TANKS-COND	Three (3) Condensate Tanks	2013	400-bbl each	Modification	APC-COMB-TKLD
EU-TANKS-PW	EP-TANKS-PW	Three (3) Produced Water Tanks	2013	400-bbl each	Modification	APC-COMB-TKLD
EU-LOAD-COND	EP-LOAD-COND	Condensate Truck Loading	2013	942,795 gallons	Modification	Vapor Return and APC-COMB-TKLD
EU-LOAD-PW	EP-LOAD-PW	Produced Water Truck Loading	2013	76,650 gallons	Modification	Vapor Return and APC-COMB-TKLD
APC-COMB-TKLD	APC-COMB-TKLD	Vapor Combustor	2013	15.0-mmBtu/hr	Modification	N/A
EU-PILOT	EP-PILOT	Vapor Combustor Pilot	2013	50-SCFH	N/A	N/A
EU-FUG	EP-FUG	Fugitive Emissions	2013	N/A	Modification	N/A
EU-HR	EP-HR	Fugitive Haul Road Emissions	2013	N/A	Modification	N/A

[1] For Emission Units (or Sources) use the following numbering system:1S, 2S, 3S,... or other appropriate designation.
[2] For Emission Points use the following numbering system:1E, 2E, 3E, ... or other appropriate designation.
[3] New, modification, removal
[4] For Control Devices use the following numbering system: 1C, 2C, 3C,... or other appropriate designation.

ATTACHMENT J: EMISSION POINTS DATA SUMMARY SHEET

Attachment J
EMISSION POINTS DATA SUMMARY SHEET

Table 1: Emissions Data															
Emission Point ID No. *(Must match Emission Units Table & Plot Plan)*	Emission Point Type[1]	Emission Unit Vented Through This Point *(Must match Emission Units Table & Plot Plan)*		Air Pollution Control Device *(Must match Emission Units Table & Plot Plan)*		Vent Time for Emission Unit *(chemical processes only)*		All Regulated Pollutants - Chemical Name/CAS[3] *(Speciate VOCs & HAPS)*	Maximum Potential Uncontrolled Emissions [4]		Maximum Potential Controlled Emissions [5]		Emission Form or Phase *(At exit conditions, Solid, Liquid or Gas/Vapor)*	Est. Method Used [6]	Emission Concentration [7] (ppmv or mg/m[4])
		ID No.	Source	ID No.	Device Type	Short Term[2]	Max (hr/yr)		lb/hr	ton/yr	lb/hr	ton/yr			
EP-GPU1	Upward vertical stack	EU-GPU1	GPU Burner	N/A	None	N/A	N/A	NOx CO VOC SO_2 PM_{10} PM Total n-Hexane Formaldehyde Benzene Toluene Carbon Dioxide Methane Nitrous Oxide	0.11 0.09 0.01 <0.01 0.01 0.01 <0.01 <0.01 <0.01 <0.01 116.98 <0.01 <0.01	0.48 0.39 0.03 <0.01 0.03 0.04 0.01 <0.01 <0.01 <0.01 512.36 0.01 <0.01	N/A	N/A	Gas/Vapor	AP-42	N/A
EP-GPU2	Upward vertical stack	EU-GPU2	GPU Burner	N/A	None	N/A	N/A	NOx CO VOC SO_2 PM_{10} PM Total n-Hexane Formaldehyde Benzene Toluene Carbon Dioxide Methane Nitrous Oxide	0.11 0.09 0.01 <0.01 0.01 0.01 <0.01 <0.01 <0.01 <0.01 116.98 <0.01 <0.01	0.48 0.39 0.03 <0.01 0.03 0.04 0.01 <0.01 <0.01 <0.01 512.36 0.01 <0.01	N/A	N/A	Gas/Vapor	AP-42	N/A

EP-HT1	Upward vertical stack	EU-HT1	Heater Treater	N/A	None	N/A	N/A	NOx CO VOC SO_2 PM_{10} PM Total n-Hexane Formaldehyde Benzene Toluene Carbon Dioxide Methane Nitrous Oxide	0.06 0.05 <0.01 <0.01 <0.01 <0.01 <0.01 <0.01 <0.01 <0.01 58.49 <0.01 <0.01	0.26 0.22 0.01 <0.01 0.01 0.02 <0.01 <0.01 <0.01 <0.01 256.18 <0.01 <0.01	N/A	N/A	Gas/Vapor	AP-42	N/A
EP-LOAD-COND*	Fugitive	EU-LOAD-COND	Condensate Truck Loading	-	Vapor Return and APC-COMB-TKLD	N/A	N/A	VOC n-Hexane Benzene Toluene Ethylbenzene Xylenes Carbon Dioxide Methane	N/A	3.18 0.18 <0.01 0.01 0.01 0.05 <0.01 <0.01	N/A	0.95 0.05 <0.01 <0.01 <0.01 0.02 <0.01 <0.01	Gas/Vapor	O (AP-42)	N/A
EP-LOAD-PW*	Fugitive	EU-LOAD-PW	Produced Water Truck Loading	-	Vapor Return and APC-COMB-TKLD	N/A	N/A	VOC n-Hexane Benzene Toluene Ethylbenzene Xylenes Carbon Dioxide Methane	N/A	0.26 0.01 <0.01 <0.01 <0.01 <0.01 <0.01 0.01	N/A	0.08 <0.01 <0.01 <0.01 <0.01 <0.01 <0.01 <0.01	Gas/Vapor	O (AP-42)	N/A
APC-COMB-TKLD	Upward vertical stack(s)	EU-TANKS-COND, EU-TANKS-PW, EU-LOAD-COND, EU-LOAD-PW, APC-COMB-TKLD, EU-PILOT	Vapor Combustor	-	None	N/A	N/A	NOx CO PM VOC n-Hexane Benzene Toluene Ethylbenzene Xylenes Carbon Dioxide Methane Nitrous Oxide	2.08 4.13 0.05 68.22 3.76 0.05 0.24 0.24 1.13 1,759.95 0.03 <0.01	9.11 18.11 0.22 298.80 16.50 0.20 1.07 1.06 4.98 7,708.57 0.15 0.01	2.08 4.13 0.05 1.36 0.08 <0.01 <0.01 <0.01 0.02 1,759.95 0.03 <0.01	9.11 18.11 0.22 5.96 0.35 <0.01 0.02 0.02 0.09 7,708.57 0.15 0.01	Gas/Vapor	O (AP-42, Mass Balance EPA TANKS 4.0.9d/ ProMax)	N/A

EP-FUG	Fugitive	EU-FUG	Fugitive Components	-	None	N/A	N/A	VOC n-Hexane Benzene Toluene Ethylbenzene Xylenes Carbon Dioxide Methane	N/A	2.01 0.09 <0.01 <0.01 <0.01 0.02 0.01 1.47	N/A	N/A	Gas/Vapor	O (EPA-453/ R-95-017)	N/A
EP-HR	Fugitive	EU-HR	Fugitive Haul Road Emissions	-	None	N/A	N/A	PM Total PM_{10} $PM_{2.5}$	0.23 0.05 0.01	0.75 0.19 0.02	N/A	N/A	Gas/Vapor	O (AP-42)	N/A

* "Controlled emissions" are the 30% uncaptured emissions.

The EMISSION POINTS DATA SUMMARY SHEET provides a summation of emissions by emission unit. Note that uncaptured process emission unit emissions are not typically considered to be fugitive and must be accounted for on the appropriate EMISSIONS UNIT DATA SHEET and on the EMISSION POINTS DATA SUMMARY SHEET. Please note that total emissions from the source are equal to all vented emissions, all fugitive emissions, plus all other emissions (e.g. uncaptured emissions). Please complete the FUGITIVE EMISSIONS DATA SUMMARY SHEET for fugitive emission activities.

[1] Please add descriptors such as upward vertical stack, downward vertical stack, horizontal stack, relief vent, rain cap, etc.

[2] Indicate by "C" if venting is continuous. Otherwise, specify the average short-term venting rate with units, for intermittent venting (ie., 15 min/hr). Indicate as many rates as needed to clarify frequency of venting (e.g., 5 min/day, 2 days/wk).

[3] List all regulated air pollutants. Speciate VOCs, including all HAPs. Follow chemical name with Chemical Abstracts Service (CAS) number. **LIST** Acids, CO, CS_2, VOCs, H_2S, Inorganics, Lead, Organics, O_3, NO, NO_2, SO_2, SO_3, all applicable Greenhouse Gases (including CO_2 and methane), etc. **DO NOT LIST** H_2, H_2O, N_2, O_2, and Noble Gases.

[4] Give maximum potential emission rate with no control equipment operating. If emissions occur for less than 1 hr, then record emissions per batch in minutes (e.g. 5 lb VOC/20 minute batch).

[5] Give maximum potential emission rate with proposed control equipment operating. If emissions occur for less than 1 hr, then record emissions per batch in minutes (e.g. 5 lb VOC/20 minute batch).

[6] Indicate method used to determine emission rate as follows: MB = material balance; ST = stack test (give date of test); EE = engineering estimate; O = other (specify).

[7] Provide for all pollutant emissions. Typically, the units of parts per million by volume (ppmv) are used. If the emission is a mineral acid (sulfuric, nitric, hydrochloric or phosphoric) use units of milligram per dry cubic meter (mg/m^3) at standard conditions (68 °F and 29.92 inches Hg) (see 45CSR7). If the pollutant is SO_2, use units of ppmv (See 45CSR10).

Attachment J
EMISSION POINTS DATA SUMMARY SHEET

Table 2: Release Parameter Data								
Emission Point ID No. *(Must match Emission Units Table)*	Inner Diameter (ft.)	Exit Gas			Emission Point Elevation (ft)		UTM Coordinates (km)	
		Temp. (°F)	Volumetric Flow [1] (acfm) *at operating conditions*	Velocity (fps)	Ground Level *(Height above mean sea level)*	Stack Height [2] *(Release height of emissions above ground level)*	Northing	Easting
EP-GPU1	1.0 (est.)	500 (est.)	~992.4	~21.1	~1,200	10.75	4,465.69168	540.09198
EP-GPU2	1.0 (est.)	500 (est.)	~992.4	~21.1	~1,200	10.75	4,465.69168	540.09198
EP-HT1	0.7	450 (est.)	~13,067	~277.3	~1,200	10	4,465.69168	540.09198
EP-TANKS-COND	N/A	Ambient	N/A	N/A	~1,200	20	4,465.69168	540.09198
EP-TANKS-PW	N/A	Ambient	N/A	N/A	~1,200	20	4,465.69168	540.09198
EP-LOAD-COND	N/A	Ambient	N/A	N/A	~1,200	3 (est.)	4,465.69168	540.09198
EP-LOAD-PW	N/A	Ambient	N/A	N/A	~1,200	3 (est.)	4,465.69168	540.09198
APC-COMB-TKLD	5.5	1,000 (est.)	TBD	TBD	~1,200	30	4,465.69168	540.09198
EP-PILOT	N/A	N/A	TBD	TBD	~1,200	N/A	4,465.69168	540.09198
EP-FUG	N/A	Ambient	N/A	N/A	~1,200	N/A	4,465.69168	540.09198
EP-HR	N/A	Ambient	N/A	N/A	~1,200	N/A	4,465.69168	540.09198

WVDEP-DAQ Revision 2/11

Note: In lieu of equipment UTM coordinates, site UTM coordinates provided. TBD= To be determined

[1] Give at operating conditions. Include inerts.
[2] Release height of emissions above ground level.

Notes:

****Stack parameters for GPUs, heater treater and line heaters are estimated based on typical equipment configurations but may vary.***

ATTACHMENT K: FUGITIVE EMISSIONS DATA SUMMARY SHEET

Attachment K

FUGITIVE EMISSIONS DATA SUMMARY SHEET

The FUGITIVE EMISSIONS SUMMARY SHEET provides a summation of fugitive emissions. Fugitive emissions are those emissions which could not reasonably pass through a stack, chimney, vent or other functionally equivalent opening. Note that uncaptured process emissions are not typically considered to be fugitive, and must be accounted for on the appropriate EMISSIONS UNIT DATA SHEET and on the EMISSION POINTS DATA SUMMARY SHEET.

Please note that total emissions from the source are equal to all vented emissions, all fugitive emissions, plus all other emissions (e.g. uncaptured emissions).

APPLICATION FORMS CHECKLIST - FUGITIVE EMISSIONS
1.) Will there be haul road activities? ☒ Yes ☐ No ☒ If YES, then complete the HAUL ROAD EMISSIONS UNIT DATA SHEET.
2.) Will there be Storage Piles? ☐ Yes ☒ No ☐ If YES, complete Table 1 of the NONMETALLIC MINERALS PROCESSING EMISSIONS UNIT DATA SHEET.
3.) Will there be Liquid Loading/Unloading Operations? ☒ Yes ☐ No ☒ If YES, complete the BULK LIQUID TRANSFER OPERATIONS EMISSIONS UNIT DATA SHEET.
4.) Will there be emissions of air pollutants from Wastewater Treatment Evaporation? ☐ Yes ☒ No ☐ If YES, complete the GENERAL EMISSIONS UNIT DATA SHEET.
5.) Will there be Equipment Leaks (e.g. leaks from pumps, compressors, in-line process valves, pressure relief devices, open-ended valves, sampling connections, flanges, agitators, cooling towers, etc.)? ☒ Yes ☐ No ☒ If YES, complete the LEAK SOURCE DATA SHEET section of the CHEMICAL PROCESSES EMISSIONS UNIT DATA SHEET.
6.) Will there be General Clean-up VOC Operations? ☐ Yes ☒ No ☐ If YES, complete the GENERAL EMISSIONS UNIT DATA SHEET.
7.) Will there be any other activities that generate fugitive emissions? ☐ Yes ☒ No ☐ If YES, complete the GENERAL EMISSIONS UNIT DATA SHEET or the most appropriate form.
If you answered "NO" to all of the items above, it is not necessary to complete the following table, "Fugitive Emissions Summary."

FUGITIVE EMISSIONS SUMMARY	All Regulated Pollutants - Chemical Name/CAS [1]	Maximum Potential Uncontrolled Emissions [2]		Maximum Potential Controlled Emissions [3]		Est. Method Used [4]
		lb/hr	ton/yr	lb/hr	ton/yr	
Haul Road/Road Dust Emissions Paved Haul Roads						
Unpaved Haul Roads	PM Total PM_{10} $PM_{2.5}$	0.23 0.05 0.01	0.75 0.19 0.02	N/A	N/A	O – AP-42 13.2.2
Storage Pile Emissions						
Loading/Unloading Operations - Condensate	VOC n-Hexane Benzene Toluene Ethylbenzene Xylenes Carbon Dioxide Methane	Does not apply	3.18 0.18 <0.01 0.01 0.01 0.05 <0.01 <0.01	Does not apply	0.95 0.05 <0.01 <0.01 <0.01 0.02 <0.01 <0.01	O – AP-42 5.2-4 / API 5-12
Loading/Unloading Operations – Produced Water	VOC n-Hexane Benzene Toluene Ethylbenzene Xylenes Carbon Dioxide Methane	Does not apply	0.26 0.01 <0.01 <0.01 <0.01 <0.01 <0.01 0.01	Does not apply	0.08 <0.01 <0.01 <0.01 <0.01 <0.01 <0.01 <0.01	O – AP-42 5.2-4 / API 5-12
Wastewater Treatment Evaporation & Operations						

Equipment Leaks	VOC n-Hexane Benzene Toluene Ethylbenzene Xylenes Carbon Dioxide Methane	Does not apply	2.01 0.09 <0.01 <0.01 <0.01 0.02 0.01 1.47	Does not apply	N/A	O – EPA-453/R-95-017
General Clean-up VOC Emissions						
Other						

[1] List all regulated air pollutants. Speciate VOCs, including all HAPs. Follow chemical name with Chemical Abstracts Service (CAS) number. LIST Acids, CO, CS_2, VOCs, H_2S, Inorganics, Lead, Organics, O_3, NO, NO_2, SO_2, SO_3, all applicable Greenhouse Gases (including CO_2 and methane), etc. DO NOT LIST H_2, H_2O, N_2, O_2, and Noble Gases.

[2] Give rate with no control equipment operating. If emissions occur for less than 1 hr, then record emissions per batch in minutes (e.g. 5 lb VOC/20 minute batch).

[3] Give rate with proposed control equipment operating. If emissions occur for less than 1 hr, then record emissions per batch in minutes (e.g. 5 lb VOC/20 minute batch).

[4] Indicate method used to determine emission rate as follows: MB = material balance; ST = stack test (give date of test); EE = engineering estimate; O = other (specify).

Note: Greenhouse Gas (GHG) emissions were calculated using EPA Mandatory Reporting Rule and 2009 API Compendium guidance. With the exception of fugitive emissions (which are calculated by mass balance), emissions calculation methodologies are intended to calculate metric tons (tonnes) for the purposes of emissions reporting to EPA. These values were converted to tons for consistency with other pollutants.

ATTACHMENT L: EMISSION UNIT DATA SHEETS

EUDS - STORAGE TANK(S): CONDENSATE

EUDS - STORAGE TANK(S): PRODUCED WATER

EUDS - BULK LIQUID TRANSFER OPERATIONS – CONDENSATE

EUDS - BULK LIQUID TRANSFER OPERATIONS – PRODUCED WATER

EUDS - CHEMICAL PROCESS (LEAK SOURCES)

EUDS - FUGITIVE EMISSIONS FROM HAUL ROADS

Attachment L
EMISSIONS UNIT DATA SHEET
STORAGE TANKS

Provide the following information for each new or modified bulk liquid storage tank as shown on the *Equipment List Form* and other parts of this application. A tank is considered modified if the material to be stored in the tank is different from the existing stored liquid.

IF USING US EPA'S TANKS EMISSION ESTIMATION PROGRAM (AVAILABLE AT **www.epa.gov/tnn/tanks.html**), APPLICANT MAY ATTACH THE SUMMARY SHEETS IN LIEU OF COMPLETING SECTIONS III, IV, & V OF THIS FORM. HOWEVER, SECTIONS I, II, AND VI OF THIS FORM MUST BE COMPLETED. US EPA'S AP-42, SECTION 7.1, "ORGANIC LIQUID STORAGE TANKS," MAY ALSO BE USED TO ESTIMATE VOC AND HAP EMISSIONS (**http://www.epa.gov/tnn/chief/**).

I. GENERAL INFORMATION (required)

1. Bulk Storage Area Name Condensate Storage	2. Tank Name Three (3) 400-bbl Condensate Storage Tanks
3. Tank Equipment Identification No. (as assigned on *Equipment List Form*) EU-TANKS-COND	4. Emission Point Identification No. (as assigned on *Equipment List Form*) EP-TANKS-COND
5. Date of Commencement of Construction (for existing tanks) 2013	
6. Type of change ☐ New Construction ☐ New Stored Material ☒ Other Tank Modification	
7. Description of Tank Modification (if applicable) Update number of tanks, throughput, flash factor, and capture efficiency.	
7A. Does the tank have more than one mode of operation? (e.g. Is there more than one product stored in the tank?) ☐ Yes ☒ No	
7B. If YES, explain and identify which mode is covered by this application (Note: A separate form must be completed for each mode).	
7C. Provide any limitations on source operation affecting emissions, any work practice standards (e.g. production variation, etc.): Not applicable	

II. TANK INFORMATION (required)

8. Design Capacity (specify barrels or gallons). Use the internal cross-sectional area multiplied by internal height. 400 barrels (per tank)	
9A. Tank Internal Diameter (ft) 12	9B. Tank Internal Height (or Length) (ft) 20
10A. Maximum Liquid Height (ft) 19	10B. Average Liquid Height (ft) 10
11A. Maximum Vapor Space Height (ft) 20	11B. Average Vapor Space Height (ft) 10
12. Nominal Capacity (specify barrels or gallons). This is also known as "working volume" and considers design liquid levels and overflow valve heights. 16,074.56 gallons (per EPA TANKS 4.0.9d)	

Revision 03/2007

13A. Maximum annual throughput (gal/yr) 942,795 (Total for all tanks)	13B. Maximum daily throughput (gal/day) 2,583 (Total for all tanks) *Rolling daily throughput total not to exceed maximum annual throughput.

14. Number of Turnovers per year (annual net throughput/maximum tank liquid volume)
59.13 (Total for all tanks, per EPA TANKS 4.0.9d)

15. Maximum tank fill rate (gal/min) Unknown

16. Tank fill method ☐ Submerged ☒ Splash ☐ Bottom Loading

17. Complete 17A and 17B for Variable Vapor Space Tank Systems ☒ Does Not Apply

17A. Volume Expansion Capacity of System (gal)	17B. Number of transfers into system per year

18. Type of tank (check all that apply):
☒ Fixed Roof ☒ vertical ___ horizontal ___ flat roof ☒ cone roof ___ dome roof
___ other (describe)
☐ External Floating Roof ___ pontoon roof ___ double deck roof
☐ Domed External (or Covered) Floating Roof
☐ Internal Floating Roof ___ vertical column support ___ self-supporting
☐ Variable Vapor Space ___ lifter roof ___ diaphragm
☐ Pressurized ___ spherical ___ cylindrical
☐ Underground
☐ Other (describe)

III. TANK CONSTRUCTION & OPERATION INFORMATION (optional if providing TANKS Summary Sheets)
Refer to enclosed TANKS Summary Sheet.

19. Tank Shell Construction:
☐ Riveted ☐ Gunite lined ☐ Epoxy-coated rivets ☐ Other (describe)

20A. Shell Color	20B. Roof Color	20C. Year Last Painted

21. Shell Condition (if metal and unlined):
☐ No Rust ☐ Light Rust ☐ Dense Rust ☐ Not applicable

22A. Is the tank heated? ☐ YES ☐ NO

22B. If YES, provide the operating temperature (°F)

22C. If YES, please describe how heat is provided to tank.

23. Operating Pressure Range (psig):

24. Complete the following section for **Vertical Fixed Roof Tanks** ☐ Does Not Apply

24A. For dome roof, provide roof radius (ft)

24B. For cone roof, provide slope (ft/ft)

25. Complete the following section for **Floating Roof Tanks** ☐ Does Not Apply

25A. Year Internal Floaters Installed:

25B. Primary Seal Type: (check one)
☐ Metallic (Mechanical) Shoe Seal ☐ Liquid Mounted Resilient Seal
☐ Vapor Mounted Resilient Seal ☐ Other (describe):

25C. Is the Floating Roof equipped with a Secondary Seal? ☐ YES ☐ NO

25D. If YES, how is the secondary seal mounted? (check one) ☐ Shoe ☐ Rim ☐ Other (describe):			
25E. Is the Floating Roof equipped with a weather shield? ☐ YES ☐ NO			
25F. Describe deck fittings; indicate the number of each type of fitting:			
ACCESS HATCH			
BOLT COVER, GASKETED:	UNBOLTED COVER, GASKETED:	UNBOLTED COVER, UNGASKETED:	
AUTOMATIC GAUGE FLOAT WELL			
BOLT COVER, GASKETED:	UNBOLTED COVER, GASKETED:	UNBOLTED COVER, UNGASKETED:	
COLUMN WELL			
BUILT-UP COLUMN – SLIDING COVER, GASKETED:	BUILT-UP COLUMN – SLIDING COVER, UNGASKETED:	PIPE COLUMN – FLEXIBLE FABRIC SLEEVE SEAL:	
LADDER WELL			
PIP COLUMN – SLIDING COVER, GASKETED:	PIPE COLUMN – SLIDING COVER, UNGASKETED:		
GAUGE-HATCH/SAMPLE PORT			
SLIDING COVER, GASKETED:	SLIDING COVER, UNGASKETED:		
ROOF LEG OR HANGER WELL			
WEIGHTED MECHANICAL ACTUATION, GASKETED:	WEIGHTED MECHANICAL ACTUATION, UNGASKETED:	SAMPLE WELL-SLIT FABRIC SEAL (10% OPEN AREA)	
VACUUM BREAKER			
WEIGHTED MECHANICAL ACTUATION, GASKETED:	WEIGHTED MECHANICAL ACTUATION, UNGASKETED:		
RIM VENT			
WEIGHTED MECHANICAL ACTUATION GASKETED:	WEIGHTED MECHANICAL ACTUATION, UNGASKETED:		
DECK DRAIN (3-INCH DIAMETER)			
OPEN:	90% CLOSED:		
STUB DRAIN			
1-INCH DIAMETER:			
OTHER (DESCRIBE, ATTACH ADDITIONAL PAGES IF NECESSARY)			

26. Complete the following section for Internal Floating Roof Tanks ☐ Does Not Apply	
26A. Deck Type: ☐ Bolted ☐ Welded	
26B. For Bolted decks, provide deck construction:	
26C. Deck seam: ☐ Continuous sheet construction 5 feet wide ☐ Continuous sheet construction 6 feet wide ☐ Continuous sheet construction 7 feet wide ☐ Continuous sheet construction 5 × 7.5 feet wide ☐ Continuous sheet construction 5 × 12 feet wide ☐ Other (describe)	
26D. Deck seam length (ft)	26E. Area of deck (ft^2)
For column supported tanks: 26F. Number of columns:	26G. Diameter of each column:

IV. SITE INFORMANTION (optional if providing TANKS Summary Sheets)

27. Provide the city and state on which the data in this section are based. **Refer to enclosed TANKS Summary Sheet.**
28. Daily Average Ambient Temperature (°F)
29. Annual Average Maximum Temperature (°F)
30. Annual Average Minimum Temperature (°F)
31. Average Wind Speed (miles/hr)
32. Annual Average Solar Insulation Factor (BTU/(ft^2·day))
33. Atmospheric Pressure (psia)

V. LIQUID INFORMATION (optional if providing TANKS Summary Sheets)

34. Average daily temperature range of bulk liquid: **Refer to enclosed TANKS Summary Sheet.**	
34A. Minimum (°F)	34B. Maximum (°F)
35. Average operating pressure range of tank:	
35A. Minimum (psig)	35B. Maximum (psig)
36A. Minimum Liquid Surface Temperature (°F)	36B. Corresponding Vapor Pressure (psia)
37A. Average Liquid Surface Temperature (°F)	37B. Corresponding Vapor Pressure (psia)
38A. Maximum Liquid Surface Temperature (°F)	38B. Corresponding Vapor Pressure (psia)

39. Provide the following for <u>each</u> liquid or gas to be stored in tank. Add additional pages if necessary.

39A. Material Name or Composition			
39B. CAS Number			
39C. Liquid Density (lb/gal)			
39D. Liquid Molecular Weight (lb/lb-mole)			
39E. Vapor Molecular Weight (lb/lb-mole)			

Maximum Vapor Pressure 39F. True (psia) 39G. Reid (psia)			
Months Storage per Year 39H. From 39I. To			

VI. EMISSIONS AND CONTROL DEVICE DATA (required)

40. Emission Control Devices (check as many as apply): ☐ Does Not Apply

- ☐ Carbon Adsorption[1]
- ☐ Condenser[1]
- ☐ Conservation Vent (psig)
  - Vacuum Setting Pressure Setting
- ☐ Emergency Relief Valve (psig)
- ☐ Inert Gas Blanket of
- ☐ Insulation of Tank with
- ☐ Liquid Absorption (scrubber)[1]
- ☐ Refrigeration of Tank
- ☐ Rupture Disc (psig)
- ☐ Vent to Incinerator[1]
- ☒ Other[1] (describe): Vapor Combustor

[1] Complete appropriate Air Pollution Control Device Sheet.

41. Expected Emission Rate (submit Test Data or Calculations here or elsewhere in the application).

Material Name & CAS No.	Breathing Loss (lb/hr)	Working Loss		Annual Loss (lb/yr)	Estimation Method[1]
		Amount	Units		
Refer to Attachment N Emissions Calculations and enclosed TANKS Summary Sheet.					

[1] EPA = EPA Emission Factor, MB = Material Balance, SS = Similar Source, ST = Similar Source Test, Throughput Data, O = Other (specify)

☒ Remember to attach emissions calculations, including TANKS Summary Sheets if applicable.

Attachment L
EMISSIONS UNIT DATA SHEET
STORAGE TANKS

Provide the following information for each new or modified bulk liquid storage tank as shown on the *Equipment List Form* and other parts of this application. A tank is considered modified if the material to be stored in the tank is different from the existing stored liquid.

IF USING US EPA'S TANKS EMISSION ESTIMATION PROGRAM (AVAILABLE AT **www.epa.gov/tnn/tanks.html**), APPLICANT MAY ATTACH THE SUMMARY SHEETS IN LIEU OF COMPLETING SECTIONS III, IV, & V OF THIS FORM. HOWEVER, SECTIONS I, II, AND VI OF THIS FORM MUST BE COMPLETED. US EPA'S AP-42, SECTION 7.1, "ORGANIC LIQUID STORAGE TANKS," MAY ALSO BE USED TO ESTIMATE VOC AND HAP EMISSIONS (**http://www.epa.gov/tnn/chief/**).

I. GENERAL INFORMATION (required)

1. Bulk Storage Area Name Produced Water Storage	2. Tank Name Three (3) 400-bbl Produced Water Storage Tanks
3. Tank Equipment Identification No. (as assigned on *Equipment List Form*) EU-TANKS-PW	4. Emission Point Identification No. (as assigned on *Equipment List Form*) EP-TANKS-PW
5. Date of Commencement of Construction (for existing tanks) 2013	
6. Type of change ☐ New Construction ☐ New Stored Material ☒ Other Tank Modification	
7. Description of Tank Modification (if applicable) Update quantity of tanks, throughput, flash factor, and capture efficiency.	
7A. Does the tank have more than one mode of operation? (e.g. Is there more than one product stored in the tank?) ☐ Yes ☒ No	
7B. If YES, explain and identify which mode is covered by this application (Note: A separate form must be completed for each mode).	
7C. Provide any limitations on source operation affecting emissions, any work practice standards (e.g. production variation, etc.): Not applicable	

II. TANK INFORMATION (required)

8. Design Capacity (specify barrels or gallons). Use the internal cross-sectional area multiplied by internal height. 400 barrels (per tank)	
9A. Tank Internal Diameter (ft) 12	9B. Tank Internal Height (or Length) (ft) 20
10A. Maximum Liquid Height (ft) 19	10B. Average Liquid Height (ft) 10
11A. Maximum Vapor Space Height (ft) 20	11B. Average Vapor Space Height (ft) 10
12. Nominal Capacity (specify barrels or gallons). This is also known as "working volume" and considers design liquid levels and overflow valve heights. 16,074.56 gallons (per EPA TANKS 4.0.9d)	

13A. Maximum annual throughput (gal/yr) 76,650 (Total for all tanks)	13B. Maximum daily throughput (gal/day) 210 (Total for all tanks) *Rolling daily throughput total not to exceed maximum annual throughput.
14. Number of Turnovers per year (annual net throughput/maximum tank liquid volume) 4.60 (Total for all tanks, per EPA TANKS 4.0.9d)	
15. Maximum tank fill rate (gal/min) Unknown	
16. Tank fill method ☐ Submerged ☒ Splash ☐ Bottom Loading	
17. Complete 17A and 17B for Variable Vapor Space Tank Systems ☒ Does Not Apply	
17A. Volume Expansion Capacity of System (gal)	17B. Number of transfers into system per year
18. Type of tank (check all that apply): ☒ Fixed Roof ☒ vertical ___ horizontal ___ flat roof ☒ cone roof ___ dome roof ___ other (describe) ☐ External Floating Roof ___ pontoon roof ___ double deck roof ☐ Domed External (or Covered) Floating Roof ☐ Internal Floating Roof ___ vertical column support ___ self-supporting ☐ Variable Vapor Space ___ lifter roof ___ diaphragm ☐ Pressurized ___ spherical ___ cylindrical ☐ Underground ☐ Other (describe)	

III. TANK CONSTRUCTION & OPERATION INFORMATION (optional if providing TANKS Summary Sheets)
Refer to enclosed TANKS Summary Sheet.

19. Tank Shell Construction: ☐ Riveted ☐ Gunite lined ☐ Epoxy-coated rivets ☐ Other (describe)		
20A. Shell Color	20B. Roof Color	20C. Year Last Painted
21. Shell Condition (if metal and unlined): ☐ No Rust ☐ Light Rust ☐ Dense Rust ☐ Not applicable		
22A. Is the tank heated? ☐ YES ☐ NO		
22B. If YES, provide the operating temperature (°F)		
22C. If YES, please describe how heat is provided to tank.		
23. Operating Pressure Range (psig):		
24. Complete the following section for **Vertical Fixed Roof Tanks** ☐ Does Not Apply		
24A. For dome roof, provide roof radius (ft)		
24B. For cone roof, provide slope (ft/ft)		
25. Complete the following section for **Floating Roof Tanks** ☐ Does Not Apply		
25A. Year Internal Floaters Installed:		
25B. Primary Seal Type: (check one)	☐ Metallic (Mechanical) Shoe Seal ☐ Vapor Mounted Resilient Seal	☐ Liquid Mounted Resilient Seal ☐ Other (describe):
25C. Is the Floating Roof equipped with a Secondary Seal? ☐ YES ☐ NO		

25D. If YES, how is the secondary seal mounted? (check one) ☐ Shoe ☐ Rim ☐ Other (describe):			
25E. Is the Floating Roof equipped with a weather shield? ☐ YES ☐ NO			
25F. Describe deck fittings; indicate the number of each type of fitting:			
ACCESS HATCH			
BOLT COVER, GASKETED:	UNBOLTED COVER, GASKETED:	UNBOLTED COVER, UNGASKETED:	
AUTOMATIC GAUGE FLOAT WELL			
BOLT COVER, GASKETED:	UNBOLTED COVER, GASKETED:	UNBOLTED COVER, UNGASKETED:	
COLUMN WELL			
BUILT-UP COLUMN – SLIDING COVER, GASKETED:	BUILT-UP COLUMN – SLIDING COVER, UNGASKETED:	PIPE COLUMN – FLEXIBLE FABRIC SLEEVE SEAL:	
LADDER WELL			
PIP COLUMN – SLIDING COVER, GASKETED:	PIPE COLUMN – SLIDING COVER, UNGASKETED:		
GAUGE-HATCH/SAMPLE PORT			
SLIDING COVER, GASKETED:	SLIDING COVER, UNGASKETED:		
ROOF LEG OR HANGER WELL			
WEIGHTED MECHANICAL ACTUATION, GASKETED:	WEIGHTED MECHANICAL ACTUATION, UNGASKETED:	SAMPLE WELL-SLIT FABRIC SEAL (10% OPEN AREA)	
VACUUM BREAKER			
WEIGHTED MECHANICAL ACTUATION, GASKETED:	WEIGHTED MECHANICAL ACTUATION, UNGASKETED:		
RIM VENT			
WEIGHTED MECHANICAL ACTUATION GASKETED:	WEIGHTED MECHANICAL ACTUATION, UNGASKETED:		
DECK DRAIN (3-INCH DIAMETER)			
OPEN:	90% CLOSED:		
STUB DRAIN			
1-INCH DIAMETER:			
OTHER (DESCRIBE, ATTACH ADDITIONAL PAGES IF NECESSARY)			

26. Complete the following section for Internal Floating Roof Tanks ☐ Does Not Apply	
26A. Deck Type: ☐ Bolted ☐ Welded	
26B. For Bolted decks, provide deck construction:	
26C. Deck seam: ☐ Continuous sheet construction 5 feet wide ☐ Continuous sheet construction 6 feet wide ☐ Continuous sheet construction 7 feet wide ☐ Continuous sheet construction 5 × 7.5 feet wide ☐ Continuous sheet construction 5 × 12 feet wide ☐ Other (describe)	
26D. Deck seam length (ft)	26E. Area of deck (ft^2)
For column supported tanks: 26F. Number of columns:	26G. Diameter of each column:

IV. SITE INFORMANTION (optional if providing TANKS Summary Sheets)

27. Provide the city and state on which the data in this section are based. **Refer to enclosed TANKS Summary Sheet.**
28. Daily Average Ambient Temperature (°F)
29. Annual Average Maximum Temperature (°F)
30. Annual Average Minimum Temperature (°F)
31. Average Wind Speed (miles/hr)
32. Annual Average Solar Insulation Factor (BTU/(ft^2·day))
33. Atmospheric Pressure (psia)

V. LIQUID INFORMATION (optional if providing TANKS Summary Sheets)

34. Average daily temperature range of bulk liquid: **Refer to enclosed TANKS Summary Sheet.**	
34A. Minimum (°F)	34B. Maximum (°F)
35. Average operating pressure range of tank:	
35A. Minimum (psig)	35B. Maximum (psig)
36A. Minimum Liquid Surface Temperature (°F)	36B. Corresponding Vapor Pressure (psia)
37A. Average Liquid Surface Temperature (°F)	37B. Corresponding Vapor Pressure (psia)
38A. Maximum Liquid Surface Temperature (°F)	38B. Corresponding Vapor Pressure (psia)

39. Provide the following for <u>each</u> liquid or gas to be stored in tank. Add additional pages if necessary.

39A. Material Name or Composition			
39B. CAS Number			
39C. Liquid Density (lb/gal)			
39D. Liquid Molecular Weight (lb/lb-mole)			
39E. Vapor Molecular Weight (lb/lb-mole)			

Maximum Vapor Pressure 39F. True (psia) 39G. Reid (psia)			
Months Storage per Year 39H. From 39I. To			

VI. EMISSIONS AND CONTROL DEVICE DATA (required)

40. Emission Control Devices (check as many as apply): ☐ Does Not Apply

- ☐ Carbon Adsorption[1]
- ☐ Condenser[1]
- ☐ Conservation Vent (psig)
  - Vacuum Setting Pressure Setting
- ☐ Emergency Relief Valve (psig)
- ☐ Inert Gas Blanket of
- ☐ Insulation of Tank with
- ☐ Liquid Absorption (scrubber)[1]
- ☐ Refrigeration of Tank
- ☐ Rupture Disc (psig)
- ☐ Vent to Incinerator[1]
- ☒ Other[1] (describe): Vapor Combustor

[1] Complete appropriate Air Pollution Control Device Sheet.

41. Expected Emission Rate (submit Test Data or Calculations here or elsewhere in the application).

Material Name & CAS No.	Breathing Loss (lb/hr)	Working Loss		Annual Loss (lb/yr)	Estimation Method[1]
		Amount	Units		
Refer to Attachment N Emissions Calculations and enclosed TANKS Summary Sheet.					

[1] EPA = EPA Emission Factor, MB = Material Balance, SS = Similar Source, ST = Similar Source Test, Throughput Data, O = Other (specify)

☒ Remember to attach emissions calculations, including TANKS Summary Sheets if applicable.

Attachment L
EMISSIONS UNIT DATA SHEET
BULK LIQUID TRANSFER OPERATIONS

Furnish the following information for each new or modified bulk liquid transfer area or loading rack, as shown on the *Equipment List Form* and other parts of this application. This form is to be used for bulk liquid transfer operations such as to and from drums, marine vessels, rail tank cars, and tank trucks.

Identification Number (as assigned on *Equipment List Form*): EU-LOAD-COND

1. Loading Area Name: Condensate Truck Loading

2. Type of cargo vessels accommodated at this rack or transfer point (check as many as apply):
☐ Drums ☐ Marine Vessels ☐ Rail Tank Cars ☒ Tank Trucks

3. Loading Rack or Transfer Point Data:

Number of pumps	One (1)
Number of liquids loaded	One (1)
Maximum number of marine vessels, tank trucks, tank cars, and/or drums loading at one time	One (1)

4. Does ballasting of marine vessels occur at this loading area?
☐ Yes ☐ No ☒ Does not apply

5. Describe cleaning location, compounds and procedure for cargo vessels using this transfer point:

Point is kept clear. Scotches are provided. Lines kept in good working order and tested periodically.

6. Are cargo vessels pressure tested for leaks at this or any other location?
☒ Yes ☐ No

If YES, describe:

Vessel pressure tested in accordance with DOT requirements, if applicable.

WVDEP-OAQ Revision 03-2007

7. Projected Maximum Operating Schedule (for rack or transfer point as a whole):				
Maximum	Jan. - Mar.	Apr. - June	July - Sept.	Oct. - Dec.
hours/day	24	24	24	24
days/week	5	5	5	5
weeks/quarter	13	13	13	13

8. Bulk Liquid Data *(add pages as necessary):*		
Pump ID No.		N/A
Liquid Name		Condensate
Max. daily throughput (1000 gal/day)		2.583
Max. annual throughput (1000 gal/yr)		942,795
Loading Method [1]		SUB
Max. Fill Rate (gal/min)		125
Average Fill Time (min/loading)		~60
Max. Bulk Liquid Temperature (°F)		50.33
True Vapor Pressure [2]		7.6845
Cargo Vessel Condition [3]		U
Control Equipment or Method [4]		O = Vapor Return w/ Combustion Controls
Minimum control efficiency (%)		70% Capture / 98% Combustion / 69% Overall
Maximum Emission Rate	Loading (lb/hr)	15.19
	Annual (lb/yr)	1,900 (based on 0.95 tons/year)
Estimation Method [5]		EPA

WVDEP-OAQ Revision 03-2007

[1] BF = Bottom Fill SP = Splash Fill SUB = Submerged Fill
[2] At maximum bulk liquid temperature
[3] B = Ballasted Vessel, C = Cleaned, U = Uncleaned (dedicated service), O = other (describe)
[4] List as many as apply (complete and submit appropriate *Air Pollution Control Device Sheets*):CA = Carbon Adsorption LOA = Lean Oil AdsorptionCO = Condensation SC = Scrubber (Absorption)CRA = Compressor-Refrigeration-Absorption TO = Thermal Oxidation or Incineration CRC = Compression-Refrigeration-Condensation VB = Dedicated Vapor Balance (closed system) O = other (descibe)
[5] EPA = EPA Emission Factor as stated in AP-42 MB = Material Balance TM = Test Measurement based upon test data submittal O = other (describe)

9. **Proposed Monitoring, Recordkeeping, Reporting, and Testing** Please propose monitoring, recordkeeping, and reporting in order to demonstrate compliance with the proposed operating parameters. Please propose testing in order to demonstrate compliance with the proposed emissions limits.	
MONITORING Captured loading emissions shall be routed to the vapor combustor(s). The combustor(s) shall be operated in accordance with existing permit requirements.	RECORDKEEPING As currently permitted
REPORTING As currently permitted	TESTING As currently permitted

MONITORING. PLEASE LIST AND DESCRIBE THE PROCESS PARAMETERS AND RANGES THAT ARE PROPOSED TO BE MONITORED IN ORDER TO DEMONSTRATE COMPLIANCE WITH THE OPERATION OF THIS PROCESS EQUIPMENT OPERATION/AIR POLLUTION CONTROL DEVICE.
RECORDKEEPING. PLEASE DESCRIBE THE PROPOSED RECORDKEEPING THAT WILL ACCOMPANY THE MONITORING.

REPORTING. PLEASE DESCRIBE THE PROPOSED FREQUENCY OF REPORTING OF THE RECORDKEEPING.
TESTING. PLEASE DESCRIBE ANY PROPOSED EMISSIONS TESTING FOR THIS PROCESS EQUIPMENT/AIR POLLUTION CONTROL DEVICE.

10. Describe all operating ranges and maintenance procedures required by Manufacturer to maintain warranty

Not applicable

Attachment L
EMISSIONS UNIT DATA SHEET
BULK LIQUID TRANSFER OPERATIONS

Furnish the following information for each new or modified bulk liquid transfer area or loading rack, as shown on the *Equipment List Form* and other parts of this application. This form is to be used for bulk liquid transfer operations such as to and from drums, marine vessels, rail tank cars, and tank trucks.

Identification Number (as assigned on *Equipment List Form*): EU-LOAD-PW

1. Loading Area Name: Produced Water Truck Loading

2. Type of cargo vessels accommodated at this rack or transfer point (check as many as apply):
☐ Drums ☐ Marine Vessels ☐ Rail Tank Cars ☒ Tank Trucks

3. Loading Rack or Transfer Point Data:

Number of pumps	One (1)
Number of liquids loaded	One (1)
Maximum number of marine vessels, tank trucks, tank cars, and/or drums loading at one time	One (1)

4. Does ballasting of marine vessels occur at this loading area?
☐ Yes ☐ No ☒ Does not apply

5. Describe cleaning location, compounds and procedure for cargo vessels using this transfer point:

Point is kept clear. Scotches are provided. Lines kept in good working order and tested periodically.

6. Are cargo vessels pressure tested for leaks at this or any other location?
☒ Yes ☐ No

If YES, describe:

Vessel pressure tested in accordance with DOT requirements, if applicable.

WVDEP-OAQ Revision 03-2007

7. Projected Maximum Operating Schedule (for rack or transfer point as a whole):				
Maximum	Jan. - Mar.	Apr. - June	July - Sept.	Oct. - Dec.
hours/day	24	24	24	24
days/week	5	5	5	5
weeks/quarter	13	13	13	13

8. Bulk Liquid Data *(add pages as necessary):*		
Pump ID No.		N/A
Liquid Name		Produced Water
Max. daily throughput (1000 gal/day)		0.21
Max. annual throughput (1000 gal/yr)		76.650
Loading Method [1]		SUB
Max. Fill Rate (gal/min)		125
Average Fill Time (min/loading)		~60
Max. Bulk Liquid Temperature (°F)		50.33
True Vapor Pressure [2]		7.6845
Cargo Vessel Condition [3]		U
Control Equipment or Method [4]		O = Vapor Return w/ Combustion Controls
Minimum control efficiency (%)		70% Capture / 98% Combustion / 69% Overall
Maximum Emission Rate	Loading (lb/hr)	15.19
	Annual (lb/yr)	155.22 (based on 0.08 tons/year)
Estimation Method [5]		EPA

WVDEP-OAQ Revision 03-2007

[1] BF = Bottom Fill SP = Splash Fill SUB = Submerged Fill
[2] At maximum bulk liquid temperature
[3] B = Ballasted Vessel, C = Cleaned, U = Uncleaned (dedicated service), O = other (describe)
[4] List as many as apply (complete and submit appropriate *Air Pollution Control Device Sheets*):CA = Carbon Adsorption LOA = Lean Oil AdsorptionCO = Condensation SC = Scrubber (Absorption)CRA = Compressor-Refrigeration-Absorption TO = Thermal Oxidation or Incineration CRC = Compression-Refrigeration-Condensation VB = Dedicated Vapor Balance (closed system) O = other (descibe)
[5] EPA = EPA Emission Factor as stated in AP-42 MB = Material Balance TM = Test Measurement based upon test data submittal O = other (describe)

9. **Proposed Monitoring, Recordkeeping, Reporting, and Testing** Please propose monitoring, recordkeeping, and reporting in order to demonstrate compliance with the proposed operating parameters. Please propose testing in order to demonstrate compliance with the proposed emissions limits.	
MONITORING Captured loading emissions shall be routed to the vapor combustor(s). The combustor(s) shall be operated in accordance with existing permit requirements.	RECORDKEEPING As currently permitted
REPORTING As currently permitted	TESTING As currently permitted
MONITORING. PLEASE LIST AND DESCRIBE THE PROCESS PARAMETERS AND RANGES THAT ARE PROPOSED TO BE MONITORED IN ORDER TO DEMONSTRATE COMPLIANCE WITH THE OPERATION OF THIS PROCESS EQUIPMENT OPERATION/AIR POLLUTION CONTROL DEVICE.	
RECORDKEEPING. PLEASE DESCRIBE THE PROPOSED RECORDKEEPING THAT WILL ACCOMPANY THE MONITORING.	

REPORTING. PLEASE DESCRIBE THE PROPOSED FREQUENCY OF REPORTING OF THE RECORDKEEPING.
TESTING. PLEASE DESCRIBE ANY PROPOSED EMISSIONS TESTING FOR THIS PROCESS EQUIPMENT/AIR POLLUTION CONTROL DEVICE.

10. Describe all operating ranges and maintenance procedures required by Manufacturer to maintain warranty

Not applicable

Attachment L
EMISSIONS UNIT DATA SHEET
CHEMICAL PROCESS

For chemical processes please fill out this sheet and all supplementary forms (see below) that apply. Please check all supplementary forms that have been completed.

- ☐ *Emergency Vent Summary Sheet*
- ☒ *Leak Sources Data Sheet*
- ☐ *Toxicology Data Sheet*
- ☐ *Reactor Data Sheet*
- ☐ *Distillation Column Data Sheet*

1. Chemical process area name and equipment ID number (as shown in *Equipment List Form*)
   Components in natural gas and light liquid service (EU-FUG)

2. Standard Industrial Classification Codes (SICs) for process(es)
   1311

3. List raw materials and ☐ attach MSDSs Previously submitted
   Natural gas and condensate

4. List Products and Maximum Production and ☐ attach MSDSs

Description and CAS Number	Maximum Hourly (lb/hr)	Maximum Annual (ton/year)
Not applicable		

5. Complete the *Emergency Vent Summary Sheet* for all emergency relief devices.

6. Complete the *Leak Source Data Sheet* and describe below or attach to application the leak detection or maintenance program to minimize fugitive emissions. Include detection instruments, calibration gases or methods, planned inspection frequency, and record-keeping, and similar pertinent information. If subject to a rule requirement (e.g. 40CFR60, Subpart VV), please list those here.

   The facility is not a natural gas processing plant (SIC 1321) and is therefore not subject to New Source Performance Standards (NSPS) Subpart KKK requirements for a leak detection and repair (LDAR) monitoring program.

   No well at the facility was completed after 9/18/2015 and the site is not subject to NSPS OOOOa LDAR for production sites.

7. Clearly describe below or attach to application Accident Procedures to be followed in the event of an accidental spill or release.

   In the event of an accidental spill or release, personnel will be protected, emergency response personnel will be notified and immediate steps to stop the spill or release will be implemented.

8A. Complete the *Toxicology Data Sheet* or attach to application a toxicology report (an up-to-date material safety data sheets (MSDS) may be used) outlining the currently known acute and chronic health effects of each compound or chemical entity emitted to the air. If these compounds have already been listed in Item 3, then a duplicate MSDS sheet is not required. Include data such as the OSHA time weighted average (TWA) or mutagenicity, teratogenicity, irritation, and other known or suspected effects should be addressed. Indicate where these are unknown, and provide references.

8B. Describe any health effects testing or epidemiological studies on these compounds that are being or may be conducted by the company or required under TSCA, RCRA or other federal regulations. Discuss the persistence in the environment of any emission (e.g. pesticides, etc.).

9. **Waste Products** - Waste products status: (If source is subject to RCRA or 45CSR25, please contact the Hazardous Waste Section of WVDEP, OAQ at (304) 926-3647.)

9A. Types and amounts of wastes to be disposed:

9B. Method of disposal and location of waste disposal facilities:

Carrier: Phone:

9C. Check here if approved USEPA/State Hazardous Waste Landfill will be used ☐

10. Maximum and Projected Typical Operating Schedule for process or project as a whole (circle appropriate units).

circle units:	(hrs/day) (hr/batch)	(days), (batches/day), (batches/week)	(days/yr), (weeks/year)
10A. Maximum			
10B. Typical			

11. Complete a *Reactor Data Sheet* for each reactor in this chemical process.

12. Complete a *Distillation Column Data Sheet* for each distillation column in this chemical process.

13. **Proposed Monitoring, Recordkeeping, Reporting, and Testing**
Please propose monitoring, recordkeeping, and reporting in order to demonstrate compliance with the proposed operating parameters. Please propose testing in order to demonstrate compliance with the proposed emissions limits.

MONITORING	RECORDKEEPING
None proposed	None proposed
REPORTING	**TESTING**
None proposed	None proposed

MONITORING. Please list and describe the process parameters and ranges that are proposed to be monitored in order to demonstrate compliance with the operation of this process equipment operation or air pollution control device.

RECORDKEEPING. Please describe the proposed recordkeeping that will accompany the monitoring.

REPORTING. Please describe the proposed frequency of reporting of the recordkeeping.

TESTING. Please describe any proposed emissions testing for this process equipment or air pollution control device.

14. Describe all operating ranges and maintenance procedures required by Manufacturer to maintain warranty

Not applicable

LEAK SOURCE DATA SHEET

Source Category	Pollutant	Number of Source Components[1]	Number of Components Monitored by Frequency[2]	Average Time to Repair (days)[3]	Estimated Annual Emission Rate (lb/yr)[4]
Pumps[5]	light liquid VOC[6,7]	0	N/A	N/A	0
	heavy liquid VOC[8]				
	Non-VOC[9]				
Valves[10]	Gas VOC	32	N/A	N/A	760
	Light Liquid VOC	43	N/A	N/A	2,020
	Heavy Liquid VOC				
	Non-VOC				
Safety Relief Valves[11]	Gas VOC	13	N/A	N/A	600
	Non VOC				
Open-ended Lines[12]	VOC	0	N/A	N/A	0
	Non-VOC				
Sampling Connections[13]	VOC	0	N/A	N/A	0
	Non-VOC				
Compressors	VOC	0	N/A	N/A	0
	Non-VOC				
Flanges	VOC	124 (Gas), 166 (LL)	N/A	N/A	260 (Gas), 340 (LL)
	Non-VOC				
Other	VOC	0	N/A	N/A	0
	Non-VOC				

[1 - 13] See notes on the following page.

Note: Component counts taken by equipment type at representative facility and made site-specific according to the number of each equipment type at this site.

Notes for Leak Source Data Sheet

1. For VOC sources include components on streams and equipment that contain greater than 10% w/w VOC, including feed streams, reaction/separation facilities, and product/by-product delivery lines. Do not include certain leakless equipment as defined below by category.

2. By monitoring frequency, give the number of sources routinely monitored for leaks, using a portable detection device that measures concentration in ppm. Do not include monitoring by visual or soap-bubble leak detection methods. "M/Q(M)/Q/SA/A/O" means the time period between inspections as follows:

   Monthly/Quarterly, with Monthly follow-up of repaired leakers/Quarterly/Semi-annual/Annually/Other (specify time period)

   If source category is not monitored, a single zero in the space will suffice. For example, if 50 gas-service valves are monitored quarterly, with monthly follow-up of those repaired, 75 are monitored semi-annually, and 50 are checked bimonthly (alternate months), with non checked at any other frequency, you would put in the category "valves, gas service:" 0/50/0/75/0/50 (bimonthly).

3. Give the average number of days, after a leak is discovered, that an attempt will be made to repair the leak.

4. Note the method used: MB - material balance; EE - engineering estimate; EPA - emission factors established by EPA (cite document used); O - other method, such as in-house emission factor (specify).

5. Do not include in the equipment count sealless pumps (canned motor or diaphragm) or those with enclosed venting to a control device. (Emissions from vented equipment should be included in the estimates given in the Emission Points Data Sheet.)

6. Volatile organic compounds (VOC) means the term as defined in 40 CFR □51.100 (s).

7. A light liquid is defined as a fluid with vapor pressure equal to or greater than 0.04 psi (0.3 Kpa) at 20°C. For mixtures, if 20% w/w or more of the stream is composed of fluids with vapor pressures greater than 0.04 psi (0.3 Kpa) at 20 °C, then the fluid is defined as a light liquid.

8. A heavy liquid is defined as a fluid with a vapor pressure less than 0.04 psi (0.3 Kpa) at 20°C. For mixtures, if less than 20% w/w of the stream is composed of fluids with vapor pressures greater than 0.04 psi (0.3 Kpa) at 20 °C, then the fluid is defined as a heavy liquid.

9. LIST CO, H_2S, mineral acids, NO, NO_2, SO_3, etc. DO NOT LIST CO_2, H_2, H_2O, N_2, O_2, and Noble Gases.

10. Include all process valves whether in-line or on an open-ended line such as sample, drain and purge valves. Do not include safety-relief valves, or leakless valves such as check, diaphragm, and bellows seal valves.

11. Do not include a safety-relief valve if there is a rupture disk in place upstream of the valve, or if the valve vents to a control device.

12 Open-ended lines include purge, drain and vent lines. Do not include sampling connections, or lines sealed by plugs, caps, blinds or second valves.

13. Do not include closed-purge sampling connections.

Attachment L
FUGITIVE EMISSIONS FROM UNPAVED HAULROADS

UNPAVED HAULROADS (including all equipment traffic involved in process, haul trucks, endloaders, etc.)

k =	Particle size multiplier	4.90	1.50
s =	Silt content of road surface material (%)	3.9	3.9
p =	Number of days per year with precipitation >0.01 in.	150	150

Item Number	Description	Number of Wheels	Mean Vehicle Weight (tons)	Mean Vehicle Speed (mph)	Miles per Trip	Maximum Trips per Hour	Maximum Trips per Year	Control Device ID Number	Control Efficiency (%)
1	Light Vehicles	4	2	10	0.76	2	1,917	N/A	N/A
2	Medium Trucks	10	15	10	0.76	1	767	N/A	N/A
3	Heavy Trucks	18	23.5	10	0.76	1	1,150	N/A	N/A
4									
5									
6									
7									
8									

Source: *AP-42 Fifth Edition – 13.2.2 Unpaved Roads*

$E = k \times 5.9 \times (s \div 12) \times (S \div 30) \times (W \div 3)^{0.7} \times (w \div 4)^{0.5} \times ((365 - p) \div 365) =$ lb/Vehicle Mile Traveled (VMT)

Where:

k =	Particle size multiplier	4.90	1.50
s =	Silt content of road surface material (%)	3.9	3.9
S =	Mean vehicle speed (mph)	10	10
W =	Mean vehicle weight (tons)	14.1	14.1
w =	Mean number of wheels per vehicle	11	11
p =	Number of days per year with precipitation >0.01 in.	150	150

For lb/hr: [lb ÷ VMT] × [VMT ÷ trip] × [Trips ÷ Hour] = lb/hr

For TPY: [lb ÷ VMT] × [VMT ÷ trip] × [Trips ÷ Hour] × [Ton ÷ 2000 lb] = Tons/year

SUMMARY OF UNPAVED HAULROAD EMISSIONS

Item No.	PM				PM-10			
	Uncontrolled		Controlled		Uncontrolled		Controlled	
	lb/hr	TPY	lb/hr	TPY	lb/hr	TPY	lb/hr	TPY
1	0.10	0.32	-	-	0.02	0.08	-	-
2	0.10	0.32	-	-	0.02	0.08	-	-
3	0.03	0.11	-	-	0.01	0.03	-	-
4								
5								
6								
7								
8								
TOTALS	**0.23**	**0.75**	-	-	**0.05**	**0.19**	-	-

Note: Minimum one-per-day average pick-up trucks and service trucks even if tanker truck not required every day. Per EPA BID calculations, all emissions based on average trips. Estimated maximum hourly, daily and yearly trips provided for information only.

Revision 03/2007

FUGITIVE EMISSIONS FROM PAVED HAULROADS – *Not Applicable*

INDUSTRIAL PAVED HAULROADS (including all equipment traffic involved in process, haul trucks, endloaders, etc.)

I =	Industrial augmentation factor (dimensionless)	
n =	Number of traffic lanes	
s =	Surface material silt content (%)	
L =	Surface dust loading (lb/mile)	

Item Number	Description	Mean Vehicle Weight (tons)	Miles per Trip	Maximum Trips per Hour	Maximum Trips per Year	Control Device ID Number	Control Efficiency (%)
1							
2							
3							
4							
5							
6							
7							
8							

Source: *AP-42 Fifth Edition – 11.2.6 Industrial Paved Roads*

$E = 0.077 \times I \times (4 \div n) \times (s \div 10) \times (L \div 1000) \times (W \div 3)^{0.7} =$ lb/Vehicle Mile Traveled (VMT)

Where:

I =	Industrial augmentation factor (dimensionless)	
n =	Number of traffic lanes	
s =	Surface meterial silt content (%)	
L =	Surface dust loading (lb/mile)	
W =	Average vehicle weight (tons)	

For lb/hr: [lb ÷ VMT] × [VMT ÷ trip] × [Trips ÷ Hour] = lb/hr

For TPY: [lb ÷ VMT] × [VMT ÷ trip] × [Trips ÷ Hour] × [Ton ÷ 2000 lb] = Tons/year

SUMMARY OF PAVED HAULROAD EMISSIONS

Item No.	Uncontrolled		Controlled	
	lb/hr	TPY	lb/hr	TPY
1				
2				
3				
4				
5				
6				
7				
8				
TOTALS				

ATTACHMENT M: AIR POLLUTION CONTROL DEVICE SHEET

APCDS – COMBUSTOR

VAPOR COMBUSTOR SPECIFICATION SHEET

Attachment M
Air Pollution Control Device Sheet
(~~FLARE~~ VAPOR COMBUSTOR SYSTEM*)

Control Device ID No. (must match Emission Units Table): APC-COMB-TKLD

Equipment Information

1. Manufacturer: MRW Technologies, Inc. Model No. TBF-5.5-30-147000	2. Method: ☐ Elevated flare ☐ Ground flare ☒ Other Describe: One (1) Vapor Combustor
3. Provide diagram(s) of unit describing capture system with duct arrangement and size of duct, air volume, capacity, horsepower of movers. If applicable, state hood face velocity and hood collection efficiency.	
4. Method of system used: Not applicable ☐ Steam-assisted ☐ Air-assisted ☐ Pressure-assisted ☐ Non-assisted	
5. Maximum capacity of ~~flare~~ vapor combustor: ~102 scf/min ~6,125 scf/hr *Based on 147,000 scfd	6. Dimensions of stack: Diameter 5.5 ft. Height 30 ft.
7. Estimated combustion efficiency: (Waste gas destruction efficiency) Estimated: ≥98% Minimum guaranteed: 98%	8. Fuel used in burners: ☒ Natural Gas ☐ Fuel Oil, Number ☐ Other, Specify:
9. Number of burners: Rating: 15 mmBTU/hr 10. Will preheat be used? ☐ Yes ☐ No	11. Describe method of controlling flame: The pilot is monitored via flame rod.
12. ~~Flare~~Vapor Combustor height: 30 ft 13. Flare tip inside diameter: N/A ft	14. Natural gas flow rate to ~~flare~~ pilot flame per pilot light: ~0.83 scf/min ≤50 scf/hr
15. Number of pilot lights: Total 1 ≤45,250** BTU/hr	16. Will automatic re-ignition be used? ☒ Yes ☐ No
17. If automatic re-ignition will be used, describe the method: If the pilot flame is lost, the control system will automatically attempt to relight the pilot. If the re-ignition attempt fails, the pilot solenoid valve will automatically close and a local and remote alarm signal will be generated to indicate loss of pilot flame.	
18. Is pilot flame equipped with a monitor? ☒ Yes ☐ No If yes, what type? ☐ Thermocouple ☐ Infra-Red ☐ Ultra Violet ☐ Camera with monitoring control room ☒ Other, Describe: Flame rod	
19. Hours of unit operation per year: 8,760	

Revision 03/15/2007

Steam Injection

20. Will steam injection be used? ☐ Yes ☒ No	21. Steam pressure PSIG Minimum Expected: Design Maximum:
22. Total Steam flow rate: LB/hr	23. Temperature: °F
24. Velocity ft/sec	25. Number of jet streams
26. Diameter of steam jets: in	27. Design basis for steam injected: LB steam/LB hydrocarbon
28. How will steam flow be controlled if steam injection is used?	

Characteristics of the Waste Gas Stream to be Burned

29.

Name	Quantity Grains of H_2S/100 ft^3	Quantity (LB/hr, ft^3/hr, etc)	Source of Material
See Vapor Combustor			
Calculations in			
Attachment N			

30. Estimate total combustible to ~~flare~~ vapor combustor: 68.22 lb/hr VOC LB/hr or ACF/hr
(Maximum mass flow rate of waste gas) ~102 scfm

31. Estimated total flow rate to ~~flare~~ vapor combustor including materials to be burned, carrier gases, auxiliary fuel, etc.:
68.22 lb/hr VOC LB/hr or ACF/hr

32. Give composition of carrier gases:

33. Temperature of emission stream: ~1,000 °F Heating value of emission stream: 2,450 BTU/ft^3 Mean molecular weight of emission stream: MW = lb/lb-mole	34. Identify and describe all auxiliary fuels to be burned. BTU/scf Not applicable BTU/scf BTU/scf BTU/scf BTU/scf
35. Temperature of ~~flare~~ vapor combustor gas: ~1,000 °F	36. ~~Flare~~ Vapor combustor gas flow rate: ~102 scf/min
37. ~~Flare~~ Vapor combustor gas heat content: 2,450 BTU/ft^3	38. ~~Flare~~ Vapor combustor gas exit velocity: scf/min

39. Maximum rate during emergency for one major piece of equipment or process unit: scf/min

40. Maximum rate during emergency for one major piece of equipment or process unit: BTU/min

41. Describe any air pollution control device inlet and outlet gas conditioning processes (e.g., gas cooling, gas reheating, gas humidification):

42. Describe the collection material disposal system: N/A
43. Have you included ***~~Flare~~ Vapor Combustor Control Device*** in the Emissions Points Data Summary Sheet? Yes
44. **Proposed Monitoring, Recordkeeping, Reporting, and Testing** Please propose monitoring, recordkeeping, and reporting in order to demonstrate compliance with the proposed operating parameters. Please propose testing in order to demonstrate compliance with the proposed emissions limits.

MONITORING: As currently permitted	RECORDKEEPING: As currently permitted
REPORTING: As currently permitted	TESTING: As currently permitted

MONITORING:	Please list and describe the process parameters and ranges that are proposed to be monitored in order to demonstrate compliance with the operation of this process equipment or air control device.
RECORDKEEPING:	Please describe the proposed recordkeeping that will accompany the monitoring.
REPORTING:	Please describe any proposed emissions testing for this process equipment on air pollution control device.
TESTING:	Please describe any proposed emissions testing for this process equipment on air pollution control device.

45. Manufacturer's Guaranteed Capture Efficiency for each air pollutant. 100% (per WVDEQ guidance)
46. Manufacturer's Guaranteed Control Efficiency for each air pollutant. $\geq$98%
47. Describe all operating ranges and maintenance procedures required by Manufacturer to maintain warranty.

Notes:

**Although a vapor combustor is not considered a flare by design, the function is consistent in that it combusts a waste stream for the purpose controlling emissions. Since there is not APCDS specifically for this device, the APCDS for Flare Systems most accurately reflects the characteristics of this control device.*

***Assuming <50 SCFH pilot fuel consumption (per pilot) and 905 Btu/scf fuel heating value.*

Tank Battery Flare Specification Sheet
MRW Technologies, Inc.
Flare Model Number: TBF-5.5-30-147000

Expected Destruction Removal Efficiency (DRE):	98% or Greater of Non-Methane Hydrocarbons
Unit Size:	5.5-foot Diameter 30-Foot Overall Height
Design Heat Input:	15 MMBTU/HR
Design Flow Rates:	147,000 SCFD
Design Heat Content:	2450 BTU/SCF
Waste Gas Flame Arrestor:	2" Enardo
Pilot Type:	MRW Electric Ignition
Pilot Operation (Continuous/Intermittent):	Continuous
Pilot Fuel Consumption:	50 SCFH or Less
Pilot Monitoring Device:	Flame Rod
Automatic Re-Ignition:	Included
Remote Alarm Indication:	Included

Description of Control Scheme:

The flare pilot is monitored via flame rod. If the pilot flame is lost, the control system will automatically attempt to relight the pilot. If the re-ignition attempt fails, the pilot solenoid valve will automatically close and a local & remote alarm signal will be generated to indicate loss of pilot flame.

C O M B U S T I O N S Y S T E M S
1910 West C Street, Jenks, OK 74037 • tel: 918.299.8877 • fax: 918.299.8870 • email: mrw@mrw-tech.com

ATTACHMENT N: SUPPORTING EMISSIONS CALCULATIONS

EXAMPLE CALCULATIONS

g/hp-hr Emission Factors:

Emission Factor (g/hp-hr) * Engine Rating (hp) * 1 lb/453.6 g = lb/hr

lb/mmBtu Emission Factors:

Emission Factor (lb/mmBtu) * Engine Rating (hp) * Fuel Use (Btu/hp-hr) * 1 mmBtu/1000000 Btu = lb/hr

Emission Factor (lb/mmBtu) * Combustor Rating (mmBtu/hr) = lb/hr

lb/mmscf Emission Factors:

Emission Factor (lb/mmscf) * Heater Rating (mmBtu/hr) * 1/Fuel Heating Value (Btu/scf) = lb/hr

kg/mmBtu Emission Factors:

Emission Factor (kg/mmBtu) * Engine Rating (hp) * Fuel Use (Btu/hp-hr) * 2.20462 lb/kg * 1 mmBtu/1000000 Btu = lb/hr

Emission Factor (kg/mmBtu) * Heater Rating (mmBtu/hr) * 2.20462 lb/kg = lb/hr

Emissions with Capture and Control Systems:

Uncontrolled Emissions = Potential to Emit without Capture and/or Control

Uncaptured Emissions = Uncontrolled Emissions * (1 – Capture Efficiency %)

Controlled Emissions = Captured Emissions * (1 – Control Efficiency %)

Fugitives:

TOC Emission Factor (lb/hr/source) * Number of Sources * VOC wt% = lb/hr VOC

Tons per Year (TPY) Conversion:

lb/hr * Hours/Year * 1 ton/2000 lb = TPY

Tonnes/Year * 1.10231131 = TPY

SWN Production Company, LLC
State of WV DNR B Pad
Summary of Criteria Air Pollutant Emissions

Equipment	Unit ID	NOx		CO		Total VOC[1]		SO_2		PM Total	
		lb/hr	TPY	lb/hr	TPY	lb/hr	TPY	lb/hr	TPY	lb/hr	TPY
23.6-hp Kubota DG972-E2 Engine - Remove	*EU-ENG2*	*0.00*	*0.00*	*0.00*	*0.00*	*0.00*	*0.00*	*0.00*	*0.00*	*0.00*	*0.00*
1.0-mmBtu/hr GPU Burner	EU-GPU1	0.11	0.48	0.09	0.39	0.01	0.03	<0.01	<0.01	0.01	0.04
1.0-mmBtu/hr GPU Burner	EU-GPU2	0.11	0.48	0.09	0.39	0.01	0.03	<0.01	<0.01	0.01	0.04
0.5-mmBtu/hr Heater Treater	EU-HT1	0.06	0.26	0.05	0.22	<0.01	0.01	<0.01	<0.01	<0.01	0.02
1.5-mmBtu/hr Line Heater - Remove	*EU-LH1*	*0.00*	*0.00*	*0.00*	*0.00*	*0.00*	*0.00*	*0.00*	*0.00*	*0.00*	*0.00*
1.5-mmBtu/hr Line Heater - Remove	*EU-LH2*	*0.00*	*0.00*	*0.00*	*0.00*	*0.00*	*0.00*	*0.00*	*0.00*	*0.00*	*0.00*
Three (3) 400-bbl Condensate Tanks Routed to Vapor Combustor - Revise	*EU-TANKS-COND*	-	-	-	-	*	*	-	-	-	-
Three (3) 400-bbl Produced Water Tanks Routed to Vapor Combustor - Revise	*EU-TANKS-PW*	-	-	-	-	*	*	-	-	-	-
Condensate Truck Loading w/ Vapor Return Routed to Combustor - Revise	*EU-LOAD-COND*	-	-	-	-	*0.22*	*0.95*	-	-	-	-
Produced Water Truck Loading w/ Vapor Return Routed to Combustor - Revise	*EU-LOAD-PW*	-	-	-	-	*0.02*	*0.08*	-	-	-	-
15.0-mmBtu/hr Vapor Combustor - Revise	*APC-COMB-TKLD*	*2.07*	*9.07*	*4.13*	*18.09*	*1.36*	*5.96*	-	-	*0.05*	*0.22*
Vapor Combustor Pilot	EU-PILOT	0.01	0.04	<0.01	0.02	<0.01	<0.01	<0.01	<0.01	<0.01	<0.01
Fugitive Emissions - Revise	*EU-FUG*	-	-	-	-	*0.46*	*2.01*	-	-	-	-
Fugitive Haul Road Emissions - Revise	*EU-HR*	-	-	-	-	-	-	-	-	*0.23*	*0.75*
Post-Modification Allowable Emissions =		**2.36**	**10.33**	**4.36**	**19.11**	**2.07**	**9.07**	**<0.01**	**0.01**	**0.30**	**1.06**
Current Permit Allowable Emissions =		**3.01**	**13.17**	**10.19**	**44.64**	**2.79**	**12.23**	**<0.01**	**0.02**	**0.44**	**1.55**
Net Allowable Emissions =		**(0.65)**	**(2.84)**	**(5.83)**	**(25.53)**	**(0.72)**	**(3.17)**	**(0.00)**	**(0.01)**	**(0.14)**	**(0.48)**

Notes:
[1] Total VOC includes all constituents heavier than Propane (C3+), including hazardous air pollutants (HAP). Speciated HAP presented in following table.

SWN Production Company, LLC
State of WV DNR B Pad
Summary of Hazardous Air Pollutants

Equipment	Unit ID	Estimated Emissions (lb/hr)									
		Acetalde-hyde	Acrolein	Benzene	Ethyl-benzene	Formalde-hyde	Methanol	n-Hexane	Toluene	Xylenes	Total HAP
23.6-hp Kubota DG972-E2 Engine - Remove	*EU-ENG2*	*0.00*	*0.00*	*0.00*	*0.00*	*0.00*	*0.00*	-	*0.00*	*0.00*	*0.00*
1.0-mmBtu/hr GPU Burner	EU-GPU1	-	-	<0.01	-	<0.01	-	<0.01	<0.01	-	<0.01
1.0-mmBtu/hr GPU Burner	EU-GPU2	-	-	<0.01	-	<0.01	-	<0.01	<0.01	-	<0.01
0.5-mmBtu/hr Heater Treater	EU-HT1	-	-	<0.01	-	<0.01	-	<0.01	<0.01	-	<0.01
1.5-mmBtu/hr Line Heater - Remove	*EU-LH1*	-	-	*0.00*	-	*0.00*	-	*0.00*	*0.00*	-	*0.00*
1.5-mmBtu/hr Line Heater - Remove	*EU-LH2*	-	-	*0.00*	-	*0.00*	-	*0.00*	*0.00*	-	*0.00*
Three (3) 400-bbl Condensate Tanks Routed to Vapor Combustor - Revise	*EU-TANKS-COND*	-	-	*	*	-	-	*	*	*	*
Three (3) 400-bbl Produced Water Tanks Routed to Vapor Combustor - Revise	*EU-TANKS-PW*	-	-	*	*	-	-	*	*	*	*
Condensate Truck Loading w/ Vapor Return Routed to Combustor - Revise	*EU-LOAD-COND*	-	-	*<0.01*	*<0.01*	-	-	*0.01*	*<0.01*	*<0.01*	*0.02*
Produced Water Truck Loading w/ Vapor Return Routed to Combustor - Revise	*EU-LOAD-PW*	-	-	*<0.01*	*<0.01*	-	-	*<0.01*	*<0.01*	*<0.01*	*<0.01*
15.0-mmBtu/hr Vapor Combustor - Revise	*APC-COMB-TKLD*	-	-	*<0.01*	*<0.01*	-	-	*0.08*	*<0.01*	*0.02*	*0.11*
Vapor Combustor Pilot	EU-PILOT	-	-	<0.01	-	<0.01	-	<0.01	<0.01	-	<0.01
Fugitive Emissions - Revise	*EU-FUG*	-	-	*<0.01*	*<0.01*	-	-	*0.02*	*<0.01*	*<0.01*	*0.03*
Fugitive Haul Road Emissions - Revise	*EU-HR*	-	-	-	-	-	-	-	-	-	-
Post-Modification Allowable Emissions =		**0.00**	**0.00**	**<0.01**	**0.01**	**<0.01**	**0.00**	**0.12**	**0.01**	**0.03**	**0.16**
Current Permit Allowable Emissions =		**<0.01**	**<0.01**	**<0.01**	**0.01**	**<0.01**	**<0.01**	**0.14**	**0.01**	**0.04**	**0.20**
Net Allowable Emissions =		**(0.00)**	**(0.00)**	**(0.00)**	**0.00**	**(0.00)**	**(0.00)**	**(0.02)**	**0.00**	**(0.01)**	**(0.04)**

Continued on Next Page

SWN Production Company, LLC
State of WV DNR B Pad
Summary of Hazardous Air Pollutants (Continued)

Equipment	Unit ID	Estimated Emissions (TPY)									
		Acetalde-hyde	Acrolein	Benzene	Ethyl-benzene	Formalde-hyde	Methanol	n-Hexane	Toluene	Xylenes	Total HAP
23.6-hp Kubota DG972-E2 Engine - Remove	*EU-ENG2*	*0.00*	*0.00*	*0.00*	*0.00*	*0.00*	*0.00*	-	*0.00*	*0.00*	*0.00*
1.0-mmBtu/hr GPU Burner	EU-GPU1	-	-	<0.01	-	<0.01	-	0.01	<0.01	-	0.01
1.0-mmBtu/hr GPU Burner	EU-GPU2	-	-	<0.01	-	<0.01	-	0.01	<0.01	-	0.01
0.5-mmBtu/hr Heater Treater	EU-HT1	-	-	<0.01	-	<0.01	-	<0.01	<0.01	-	<0.01
1.5-mmBtu/hr Line Heater - Remove	*EU-LH1*	-	-	*0.00*	-	*0.00*	-	*0.00*	*0.00*	-	*0.00*
1.5-mmBtu/hr Line Heater - Remove	*EU-LH2*	-	-	*0.00*	-	*0.00*	-	*0.00*	*0.00*	-	*0.00*
Three (3) 400-bbl Condensate Tanks Routed to Vapor Combustor - Revise	*EU-TANKS-COND*	-	-	*	*	-	-	*	*	*	*
Three (3) 400-bbl Produced Water Tanks Routed to Vapor Combustor - Revise	*EU-TANKS-PW*	-	-	*	*	-	-	*	*	*	*
Condensate Truck Loading w/ Vapor Return Routed to Combustor - Revise	*EU-LOAD-COND*	-	-	*<0.01*	*<0.01*	-	-	*0.05*	*<0.01*	*0.02*	*0.08*
Produced Water Truck Loading w/ Vapor Return Routed to Combustor - Revise	*EU-LOAD-PW*	-	-	*<0.01*	*<0.01*	-	-	*<0.01*	*<0.01*	*<0.01*	*0.01*
15.0-mmBtu/hr Vapor Combustor - Revise	*APC-COMB-TKLD*	-	-	*<0.01*	*0.02*	-	-	*0.35*	*0.02*	*0.09*	*0.48*
Vapor Combustor Pilot	EU-PILOT	-	-	<0.01	-	<0.01	-	<0.01	<0.01	-	<0.01
Fugitive Emissions - Revise	*EU-FUG*	-	-	*<0.01*	*<0.01*	-	-	*0.09*	*<0.01*	*0.02*	*0.12*
Fugitive Haul Road Emissions - Revise	*EU-HR*	-	-	-	-	-	-	-	-	-	-
Post-Modification Allowable Emissions =		**0.00**	**0.00**	**0.01**	**0.03**	**<0.01**	**0.00**	**0.52**	**0.03**	**0.13**	**0.71**
Current Permit Allowable Emissions =		**<0.01**	**<0.01**	**0.01**	**0.03**	**0.02**	**<0.01**	**0.60**	**0.04**	**0.16**	**0.87**
Net Allowable Emissions =		**(0.00)**	**(0.00)**	**0.00**	**0.00**	**(0.02)**	**(0.00)**	**(0.08)**	**(0.01)**	**(0.03)**	**(0.16)**

SWN Production Company, LLC
State of WV DNR B Pad
Summary of Greenhouse Gas Emissions - Metric Tons per Year (Tonnes)

Equipment	Unit ID	Carbon Dioxide (CO_2)		Methane (CH_4)		Methane (CH_4) as $CO_{2\,Eq.}$		Nitrous Oxide (N_2O)		Nitrous Oxide (N_2O) as $CO_{2\,Eq.}$		Total CO_2 + $CO_{2\,Eq.}$[1]	
		lb/hr	tonnes/yr	lb/hr	tonnes/yr	lb/hr	tonnes/yr	lb/hr	tonnes/yr	lb/hr	tonnes/yr	lb/hr	tonnes/yr
23.6-hp Kubota DG972-E2 Engine - Remove	*EU-ENG2*	*0.00*	*0.00*	*0.00*	*0.00*	*0.00*	*0.00*	*0.00*	*0.00*	*0.00*	*0.00*	*0.00*	*0.00*
1.0-mmBtu/hr GPU Burner	EU-GPU1	116.98	464.80	<0.01	0.01	0.06	0.22	<0.01	<0.01	0.07	0.26	117.10	465.28
1.0-mmBtu/hr GPU Burner	EU-GPU2	116.98	464.80	<0.01	0.01	0.06	0.22	<0.01	<0.01	0.07	0.26	117.10	465.28
0.5-mmBtu/hr Heater Treater	EU-HT1	58.49	232.40	<0.01	<0.01	0.03	0.11	<0.01	<0.01	0.03	0.13	58.55	232.64
1.5-mmBtu/hr Line Heater - Remove	*EU-LH1*	*0.00*	*0.00*	*0.00*	*0.00*	*0.00*	*0.00*	*0.00*	*0.00*	*0.00*	*0.00*	*0.00*	*0.00*
1.5-mmBtu/hr Line Heater - Remove	*EU-LH2*	*0.00*	*0.00*	*0.00*	*0.00*	*0.00*	*0.00*	*0.00*	*0.00*	*0.00*	*0.00*	*0.00*	*0.00*
Three (3) 400-bbl Condensate Tanks Routed to Vapor Combustor - Revise[2]	*EU-TANKS-COND*	-	-	-	-	-	-	-	-	-	-	-	-
Three (3) 400-bbl Produced Water Tanks Routed to Vapor Combustor - Revise[2]	*EU-TANKS-PW*	-	-	-	-	-	-	-	-	-	-	-	-
Condensate Truck Loading w/ Vapor Return Routed to Combustor - Revise	*EU-LOAD-COND*	*<0.01*	*<0.01*	*<0.01*	*<0.01*	*<0.01*	*0.02*	-	-	-	-	*0.00*	*0.02*
Produced Water Truck Loading w/ Vapor Return Routed to Combustor - Revise	*EU-LOAD-PW*	*<0.01*	*<0.01*	*<0.01*	*<0.01*	*0.01*	*0.05*	-	-	-	-	*0.01*	*0.05*
15.0-mmBtu/hr Vapor Combustor - Revise	*APC-COMB-TKLD*	*1,754.66*	*6,972.07*	*0.03*	*0.13*	*0.83*	*3.28*	*<0.01*	*0.01*	*0.99*	*3.92*	*1,756.47*	*6,979.27*
Vapor Combustor Pilot	EU-PILOT	5.29	21.03	<0.01	<0.01	<0.01	0.01	<0.01	<0.01	<0.01	0.01	5.30	21.05
Fugitive Emissions - Revise	*EU-FUG*	*<0.01*	*0.01*	*0.34*	*1.33*	*8.50*	*33.34*	-	-	-	-	*8.50*	*33.35*
Fugitive Haul Road Emissions - Revise	*EU-HR*	-	-	-	-	-	-	-	-	-	-	-	-
Post-Modification Allowable Emissions =		**2,052.39**	**8,155.12**	**0.38**	**1.49**	**9.48**	**37.25**	**<0.01**	**0.02**	**1.15**	**4.58**	**2,063.03**	**8,196.94**

Notes:

[1] CO_2 Equivalent = Pollutant times GWP multiplier. 40 CFR 98 Table A-1, Global Warming Potential (GWP) multiplier (100-Year Time Horizon): CO_2 = 1, CH_4 = 25, N_2O = 298

[2] Per API Compendium (2009) Chapter 5: Because most of the CH_4 and CO_2 emissions from storage tanks occur as a result of flashing (which is controlled by the vapor combustor in this case), working and breathing loss emissions of these gases are very small in production and virtually non-existent in the downstream segments. Vapors from the tanks are routed to the vapor combustor at this site. Therefore, GHG emissions from the condensate and produced water tanks are assumed to be negligible.

SWN Production Company, LLC
State of WV DNR B Pad
Summary of Greenhouse Gas Emissions - Short Tons per Year (Tons)

Equipment	Unit ID	Carbon Dioxide (CO_2)		Methane (CH_4)		Methane (CH_4) as $CO_{2\,Eq.}$		Nitrous Oxide (N_2O)		Nitrous Oxide (N_2O) as $CO_{2\,Eq.}$		Total CO_2 + $CO_{2\,Eq.}$[1]	
		lb/hr	tons/yr[2]	lb/hr	tons/yr[2]	lb/hr	tons/yr	lb/hr	tons/yr[2]	lb/hr	tons/yr	lb/hr	tons/yr
23.6-hp Kubota DG972-E2 Engine - Remove	*EU-ENG2*	*0.00*	*0.00*	*0.00*	*0.00*	*0.00*	*0.00*	*0.00*	*0.00*	*0.00*	*0.00*	*0.00*	*0.00*
1.0-mmBtu/hr GPU Burner	EU-GPU1	116.98	512.36	<0.01	0.01	0.06	0.24	<0.01	<0.01	0.07	0.29	117.10	512.89
1.0-mmBtu/hr GPU Burner	EU-GPU2	116.98	512.36	<0.01	0.01	0.06	0.24	<0.01	<0.01	0.07	0.29	117.10	512.89
0.5-mmBtu/hr Heater Treater	EU-HT1	58.49	256.18	<0.01	<0.01	0.03	0.12	<0.01	<0.01	0.03	0.14	58.55	256.44
1.5-mmBtu/hr Line Heater - Remove	*EU-LH1*	*0.00*	*0.00*	*0.00*	*0.00*	*0.00*	*0.00*	*0.00*	*0.00*	*0.00*	*0.00*	*0.00*	*0.00*
1.5-mmBtu/hr Line Heater - Remove	*EU-LH2*	*0.00*	*0.00*	*0.00*	*0.00*	*0.00*	*0.00*	*0.00*	*0.00*	*0.00*	*0.00*	*0.00*	*0.00*
Three (3) 400-bbl Condensate Tanks Routed to Vapor Combustor - Revise[3]	*EU-TANKS-COND*	-	-	-	-	-	-	-	-	-	-	-	-
Three (3) 400-bbl Produced Water Tanks Routed to Vapor Combustor - Revise[3]	*EU-TANKS-PW*	-	-	-	-	-	-	-	-	-	-	-	-
Condensate Truck Loading w/ Vapor Return Routed to Combustor - Revise	*EU-LOAD-COND*	*<0.01*	*<0.01*	*<0.01*	*<0.01*	*<0.01*	*0.02*	-	-	-	-	*0.00*	*0.02*
Produced Water Truck Loading w/ Vapor Return Routed to Combustor - Revise	*EU-LOAD-PW*	*<0.01*	*<0.01*	*<0.01*	*<0.01*	*0.01*	*0.05*	-	-	-	-	*0.01*	*0.05*
15.0-mmBtu/hr Vapor Combustor - Revise	*APC-COMB-TKLD*	*1,754.66*	*7,685.39*	*0.03*	*0.14*	*0.83*	*3.62*	*<0.01*	*0.01*	*0.99*	*4.32*	*1,756.47*	*7,693.33*
Vapor Combustor Pilot	EU-PILOT	5.29	23.18	<0.01	<0.01	<0.01	0.01	<0.01	<0.01	<0.01	0.01	5.30	23.21
Fugitive Emissions - Revise	*EU-FUG*	*<0.01*	*0.01*	*0.34*	*1.47*	*8.50*	*36.75*	-	-	-	-	*8.50*	*36.76*
Fugitive Haul Road Emissions - Revise	*EU-HR*	-	-	-	-	-	-	-	-	-	-	-	-
Post-Modification Allowable Emissions =		**2,052.39**	**8,989.48**	**0.38**	**1.64**	**9.48**	**41.06**	**<0.01**	**0.02**	**1.15**	**5.05**	**2,063.03**	**9,035.58**

Notes:

[1] CO_2 Equivalent = Pollutant times GWP multiplier. 40 CFR 98 Table A-1, Global Warming Potential (GWP) multiplier (100-Year Time Horizon): CO_2 = 1, CH_4 = 25, N_2O = 298

[2] EPA and API GHG calculation methodologies calculate emissions in metric tons (tonnes). These values have been converted to short tons for consistency with permitting threshold units.

[3] Per API Compendium (2009) Chapter 5: Because most of the CH_4 and CO_2 emissions from storage tanks occur as a result of flashing (which is controlled by the vapor combustor in this case), working and breathing loss emissions of these gases are very small in production and virtually non-existent in the downstream segments. Vapors from the tanks are routed to the vapor combustor at this site. Therefore, GHG emissions from the condensate and produced water tanks are assumed to be negligible.

SWN Production Company, LLC
State of WV DNR B Pad
Storage Tank Emissions - Criteria Air Pollutants

Tank Information

Unit ID:	EU-TANKS-COND	EU-TANKS-PW
Contents: [1]	Condensate	Produced Water
Number of Tanks:	3	3
Capacity (bbl) - Per Tank:	400	400
Capacity (gal) - Per Tank:	16,800	16,800
Total Throughput (bbl/yr):	22,448	1,825
Total Throughput (gal/yr):	942,795	76,650
Total Throughput (bbl/d):	61.5	5.0
Tank Flashing Emission Factor (lb/bbl):	25.96	0.0272
Total Working Losses (lb/yr): [2]	6,368.34	768.13
Breathing Losses per Tank (lb/yr): [2]	1,424.69	1,424.69
Tank Vapor Capture Efficiency:	100%	100%
Captured Vapors Routed to:	Vapor Combustor	Vapor Combustor

Uncontrolled Storage Tank Emissions

Unit ID:	EU-TANKS-COND		EU-TANKS-PW	
Emissions	**lb/hr**	**TPY**	**lb/hr**	**TPY**
Working Losses	0.73	3.18	0.09	0.38
Breathing Losses	0.16	0.71	0.16	0.71
Flashing Losses	66.52	291.37	0.01	0.02
Total VOC =	**67.41**	**295.27**	**0.26**	**1.12**

SWN Production Company, LLC
State of WV DNR B Pad
Storage Tank Emissions - Criteria Air Pollutants (Continued)

Controlled Storage Tank Emissions

Unit ID:	EU-TANKS-COND		EU-TANKS-PW	
Emissions	**lb/hr**	**TPY**	**lb/hr**	**TPY**
Working Losses	0.01	0.06	<0.01	0.01
Breathing Losses	<0.01	0.01	<0.01	0.01
Flashing Losses	1.33	5.83	<0.01	<0.01
Total VOC =	**1.35**	**5.91**	**0.01**	**0.02**
Per Tank =	**0.45**	**1.97**	**<0.01**	**0.01**

Notes:

[1] Produced water tanks assumed to contain 99% produced water and 1% condensate, but emissions were calculated assuming the entire throughput is condensate as a conservative estimate as requested by the WVDEQ.

[2] Flashing calculated using Promax process simulation. Reports located in Appendix A. Uncontrolled tank working/breathing/flashing emissions are routed to a vapor combustor with 100% capture efficiency.

Total Annual Emissions (TPY) = Tank Working + Breathing + Flashing Emissions (TPY) * (1 - Capture Efficiency (%))

SWN Production Company, LLC
State of WV DNR B Pad
Storage Tank Emissions - Hazardous Air Pollutants

Uncontrolled Storage Tank Emissions

Unit ID:	EU-TANKS-COND		EU-TANKS-PW	
Pollutant	**lb/hr**	**TPY**	**lb/hr**	**TPY**
Total VOC = [1]	**67.41**	**295.27**	**0.26**	**1.12**
n-Hexane	3.72	16.31	0.01	0.06
Benzene	0.05	0.20	<0.01	<0.01
Toluene	0.24	1.06	<0.01	<0.01
Ethylbenzene	0.24	1.05	<0.01	<0.01
Xylenes	1.12	4.92	<0.01	0.02
Total HAP =	**5.38**	**23.55**	**0.02**	**0.09**

Controlled Storage Tank Emissions[2]

Unit ID:	EU-TANKS-COND		EU-TANKS-PW	
Pollutant	**lb/hr**	**TPY**	**lb/hr**	**TPY**
Total VOC = [1]	**1.35**	**5.91**	**0.01**	**0.02**
n-Hexane	0.07	0.33	<0.01	<0.01
Benzene	<0.01	<0.01	<0.01	<0.01
Toluene	<0.01	0.02	<0.01	<0.01
Ethylbenzene	<0.01	0.02	<0.01	<0.01
Xylenes	0.02	0.10	<0.01	<0.01
Total HAP =	**0.11**	**0.47**	**<0.01**	**<0.01**

SWN Production Company, LLC
State of WV DNR B Pad
Storage Tank Emissions - Hazardous Air Pollutants (Continued)

Estimated HAP Composition (% by Weight)[3]

Pollutant	Wt%
n-Hexane	5.523%
Benzene	0.069%
Toluene	0.360%
Ethylbenzene	0.357%
Xylenes	1.668%
Total HAP =	**7.977%**

Notes:

[1] VOC emissions calculated in Criteria Air Pollutant calculations.

[2] Uncontrolled tank working/breathing/flashing emissions are routed to a vapor combustor with 100% capture efficiency.

[3] Speciated liquids analysis located in Fugitive Emissions Calculations. HAP weight % calculated as % of total hydrocarbons in the sample. All HAP assumed to volatilize from liquids for most conservative emissions estimate.

SWN Production Company, LLC
State of WV DNR B Pad
Condensate Truck Loading Emissions - Criteria and Hazardous Air Pollutants

Loading Information

Unit ID:	**EU-LOAD-COND**
Fill Method:	Submerged
Type of Service:	Dedicated
Mode of Operation:	Normal
Saturation Factor:	0.6
Em. Factor (lb/1000 gal): [1]	6.75
Throughput (1000 gal):	942.795
Control Type:	Vapor Return/Combustion
Vapor Capture Efficiency: [2]	70%
Average Fill Rate (gal/hr):	7,500
Captured Vapors Routed to:	Vapor Combustor

7.6845	= P, True vapor pressure of liquid loaded (max. psia)
60	= M, Molecular weight of vapor (lb/lb-mol)
50.33	= T, Temperature of bulk liquid loaded (average °F)
510.33	= T, Temperature of bulk liquid loaded (°F + 460 = °R)

Uncontrolled Loading Emissions[3]

Pollutant	Max. lb/hr	Avg. lb/hr	TPY
VOC =	**50.63**	**0.73**	**3.18**
n-Hexane	2.80	0.04	0.18
Benzene	0.03	<0.01	<0.01
Toluene	0.18	<0.01	0.01
Ethylbenzene	0.18	<0.01	0.01
Xylenes	0.84	0.01	0.05
Total HAP [4] =	**4.04**	**0.06**	**0.26**

SWN Production Company, LLC
State of WV DNR B Pad
Condensate Truck Loading Emissions - Criteria and Hazardous Air Pollutants (Continued)

Uncaptured Loading Emissions[3]

Pollutant	Max. lb/hr	Avg. lb/hr	TPY
VOC =	**15.19**	**0.22**	**0.95**
n-Hexane	0.84	0.01	0.05
Benzene	0.01	<0.01	<0.01
Toluene	0.05	<0.01	<0.01
Ethylbenzene	0.05	<0.01	<0.01
Xylenes	0.25	<0.01	0.02
Total HAP [4] =	**1.21**	**0.02**	**0.08**

Notes:

[1] AP-42 5.2-4 Eq.1: Loading Loss (lb/1000 gal) = 12.46 *S*P*M/T. Properties based on EPA TANKS 4.0.9d.

[2] Uncontrolled emissions that are captured by the collection system are routed to a vapor combustor. Per AP-42 5.2-6, 70% capture efficiency can be assumed for trucks not subject to NSPS.

[3] Maximum lb/hr based on average hourly truck loading rate. Average lb/hr based on TPY conversion assuming continuous operation.

[4] Speciated liquids analysis located in Fugitive Emissions Calculations. HAP weight % calculated as % of total hydrocarbons in the sample. All HAP assumed to volatilize from liquids for most conservative emissions estimate.

Pollutant	Wt%
n-Hexane	5.523%
Benzene	0.069%
Toluene	0.360%
Ethylbenzene	0.357%
Xylenes	1.668%
Total HAP =	**7.977%**

SWN Production Company, LLC
State of WV DNR B Pad
Condensate Truck Loading Emissions - Greenhouse Gases

Loading Information

Unit ID:	**EU-LOAD-COND**
Fill Method:	Submerged
Type of Service:	Dedicated
Mode of Operation:	Normal
TOC Em. Factor (tonne/10^6 gal): [1]	0.91
Throughput (10^6 gal):	0.94280
Control Type:	Vapor Return/Combustion
Vapor Capture Efficiency: [2]	70.00%
Average Fill Rate (gal/hr):	7,500
Captured Vapors Routed to:	Vapor Combustor

ProMax CH_4 wt% =	0.26740%
ProMax CO_2 wt% =	0.02341%

Uncontrolled Loading Emissions[3, 4]

Pollutant	Max. lb/hr	Avg. lb/hr	tonnes/yr	tons/yr
CH_4	0.04	<0.01	<0.01	<0.01
CH_4 as CO_2e	1.01	0.01	0.06	0.06
CO_2	<0.01	<0.01	<0.01	<0.01
Total CO_2 + CO_2e =	**1.01**	**0.01**	**0.06**	**0.06**

SWN Production Company, LLC
State of WV DNR B Pad
Condensate Truck Loading Emissions - Greenhouse Gases (Continued)

Uncaptured Loading Emissions[3, 4]

Pollutant	Max. lb/hr	Avg. lb/hr	tonnes/yr	tons/yr
CH_4	0.01	<0.01	<0.01	<0.01
CH_4 as CO_2e	0.30	<0.01	0.02	0.02
CO_2	<0.01	<0.01	<0.01	<0.01
Total CO_2 + CO_2e =	**0.30**	**<0.01**	**0.02**	**0.02**

API Compendium Table 5-12

Loading Type	Emission Factor (tonne TOC/10^6 gal)
Rail/Truck - Submerged Loading - Dedicated Normal Service	0.91
Rail/Truck - Submerged Loading - Vapor Balance Service	1.51
Rail/Truck - Splash Loading - Dedicated Normal Service	2.20
Rail/Truck - Splash Loading - Vapor Balance Service	1.51
Marine Loading - Ships/Ocean Barges	0.28
Marine Loading - Barges	0.45

Notes:

[1] API Compendium of Greenhouse Gas Emissions Methodologies for the Oil and Gas Industry, Table 5-12.

[2] Uncontrolled emissions that are captured by the collection system are routed to a vapor combustor. Per AP-42 5.2-6, 70% capture efficiency can be assumed for trucks not subject to NSPS. Uncaptured emissions shown represent those not captured by the collection system or controlled by the vapor combustor.

[3] Maximum lb/hr based on average hourly truck loading rate. Average lb/hr based on TPY conversion assuming continuous operation.

[4] CO_2e = CO_2 equivalent (Pollutant times GWP multiplier):
40 CFR 98 Table A-1, Global Warming Potential (GWP) multiplier: CO_2 = 1, CH_4 = 25

SWN Production Company, LLC
State of WV DNR B Pad
Produced Water Truck Loading Emissions - Criteria and Hazardous Air Pollutants

Loading Information

Unit ID:	**EU-LOAD-PW**
Fill Method:	Submerged
Type of Service:	Dedicated
Mode of Operation:	Normal
Saturation Factor:	0.6
Em. Factor (lb/1000 gal): [1]	6.75
Throughput (1000 gal):	76.650
Control Type:	Vapor Return/Combustion
Vapor Capture Efficiency: [2]	70%
Average Fill Rate (gal/hr):	7,500
Captured Vapors Routed to:	Vapor Combustor

7.6845	= P, True vapor pressure of liquid loaded (max. psia)
60	= M, Molecular weight of vapor (lb/lb-mol)
50.33	= T, Temperature of bulk liquid loaded (average °F)
510.33	= T, Temperature of bulk liquid loaded (°F + 460 = °R)

Uncontrolled Loading Emissions[3]

Pollutant	Max. lb/hr	Avg. lb/hr	TPY
VOC =	**50.63**	**0.06**	**0.26**
n-Hexane	2.80	<0.01	0.01
Benzene	0.03	<0.01	<0.01
Toluene	0.18	<0.01	<0.01
Ethylbenzene	0.18	<0.01	<0.01
Xylenes	0.84	<0.01	<0.01
Total HAP [4] =	**4.04**	**<0.01**	**0.02**

SWN Production Company, LLC
State of WV DNR B Pad
Produced Water Truck Loading Emissions - Criteria and Hazardous Air Pollutants (Continued)

Uncaptured Loading Emissions[3]

Pollutant	Max. lb/hr	Avg. lb/hr	TPY
VOC =	**15.19**	**0.02**	**0.08**
n-Hexane	0.84	<0.01	<0.01
Benzene	0.01	<0.01	<0.01
Toluene	0.05	<0.01	<0.01
Ethylbenzene	0.05	<0.01	<0.01
Xylenes	0.25	<0.01	<0.01
Total HAP [4] =	**1.21**	**<0.01**	**0.01**

Notes:

[1] AP-42 5.2-4 Eq.1: Loading Loss (lb/1000 gal) = 12.46 *S*P*M/T. Properties based on 100% condensate.

[2] Uncontrolled emissions that are captured by the collection system are routed to a vapor combustor. Per AP-42 5.2-6, 70% capture efficiency can be assumed for trucks not subject to NSPS. Uncaptured emissions shown represent those not captured by the collection system or controlled by the vapor combustor.

[3] Maximum lb/hr based on average hourly truck loading rate. Average lb/hr based on TPY conversion assuming continuous operation.

[4] Speciated liquids analysis located in Fugitive Emissions Calculations. HAP weight % calculated as % of total hydrocarbons in the sample. All HAP assumed to volatilize from liquids for most conservative emissions estimate.

Pollutant	Wt%
n-Hexane	5.523%
Benzene	0.069%
Toluene	0.360%
Ethylbenzene	0.357%
Xylenes	1.668%
Total HAPs =	**7.977%**

SWN Production Company, LLC
State of WV DNR B Pad
Produced Water Truck Loading Emissions - Greenhouse Gases

Loading Information

Unit ID:	**EU-LOAD-PW**
Fill Method:	Submerged
Type of Service:	Dedicated
Mode of Operation:	Normal
TOC Em. Factor (tonne/10^6 gal): [1]	0.91
Throughput (10^6 gal):	0.0767
Control Type:	Vapor Return/Combustion
Vapor Capture Efficiency: [2]	70.00%
Average Fill Rate (gal/hr):	7,500
Captured Vapors Routed to:	Vapor Combustor

ProMax CH_4 wt% =	9.51417%
ProMax CO_2 wt% =	0.32844%

Uncontrolled Loading Emissions[3, 4]

Pollutant	Max. lb/hr	Avg. lb/hr	tonnes/yr	tons/yr
CH_4	1.43	<0.01	0.01	0.01
CH_4 as CO_2e	35.79	0.04	0.17	0.18
CO_2	0.05	<0.01	<0.01	<0.01
Total CO_2 + CO_2e =	**35.84**	**0.04**	**0.17**	**0.18**

SWN Production Company, LLC
State of WV DNR B Pad
Produced Water Truck Loading Emissions - Greenhouse Gases (Continued)

Uncaptured Loading Emissions[3, 4]

Pollutant	Max. lb/hr	Avg. lb/hr	tonnes/yr	tons/yr
CH_4	0.43	<0.01	<0.01	<0.01
CH_4 as CO_2e	10.74	0.01	0.05	0.05
CO_2	0.01	<0.01	<0.01	<0.01
Total CO_2 + CO_2e =	**10.75**	**0.01**	**0.05**	**0.05**

API Compendium Table 5-12

Loading Type	Emission Factor (tonne TOC/10^6 gal)
Rail/Truck - Submerged Loading - Dedicated Normal Service	0.91
Rail/Truck - Submerged Loading - Vapor Balance Service	1.51
Rail/Truck - Splash Loading - Dedicated Normal Service	2.20
Rail/Truck - Splash Loading - Vapor Balance Service	1.51
Marine Loading - Ships/Ocean Barges	0.28
Marine Loading - Barges	0.45

Notes:

[1] API Compendium of Greenhouse Gas Emissions Methodologies for the Oil and Gas Industry, Table 5-12.

[2] Uncontrolled emissions that are captured by the collection system are routed to a vapor combustor. Per AP-42 5.2-6, 70% capture efficiency can be assumed for trucks not subject to NSPS. Uncaptured emissions shown represent those not captured by the collection system or controlled by the vapor combustor.

[3] Maximum lb/hr based on average hourly truck loading rate. Average lb/hr based on TPY conversion assuming continuous operation.

[4] CO_2e = CO_2 equivalent (Pollutant times GWP multiplier):
40 CFR 98 Table A-1, Global Warming Potential (GWP) multiplier: CO_2 = 1, CH_4 = 25

SWN Production Company, LLC
State of WV DNR B Pad
Vapor Combustor Emissions Calculations - Criteria and Hazardous Air Pollutants

Criteria and Hazardous Air Pollutant Emissions

Unit ID	Pollutant	Emission Factors[1]	Total Captured Emissions[2]		Combustor Destruction Efficiency	Total Controlled Emissions (Post-Capture and Combustion)	
			lb/hr	TPY	%	lb/hr	TPY
APC-COMB-TKLD	NOx	0.138	-	-	-	2.07	9.07
	CO	0.2755	-		-	4.13	18.09
	PM	7.6	-		-	0.05	0.22
	VOC	Mass Balance	68.22	298.80	98.00%	1.36	5.96
	n-Hexane	Mass Balance	3.76	16.50	98.00%	0.08	0.35
	Benzene	Mass Balance	0.05	0.20	98.00%	<0.01	<0.01
	Toluene	Mass Balance	0.24	1.07	98.00%	<0.01	0.02
	Ethylbenzene	Mass Balance	0.24	1.06	98.00%	<0.01	0.02
	Xylenes	Mass Balance	1.13	4.98	98.00%	0.02	0.09

Notes:

[1] Although a vapor combustor is not considered a flare by design, the function is consistent in that it combusts a waste stream for the purpose of reducing emissions; therefore, flare emission factors for NOx and CO were used to provide the most accurate emissions estimates. Although the combustor is designed to be smokeless, PM emissions have been estimated using AP-42 Table 1.4-1 factor (lb/mmscf) for a conservative estimate.

	Hours per Year:	8,760
	Number of Combustors:	1
NOx and CO emission factors (lb/mmBtu): *TCEQ Air Permit Technical Guidance for Chemical Sources: Flares and Vapor Oxidizers:* High Btu waste streams (>1,000 Btu/scf) based on heat input to each combustor =		15.0 mmBtu/hr per Combustor
		15.0 mmBtu/hr Total Heat Input

[2] Total captured emissions are based on 100% capture efficiency from storage tanks and 70% capture efficiency from truck loading with 98% destruction efficiency from the vapor combustor based on 8,760 hours of operation per year. Uncaptured vapors reported at the loading emission units. Captured emissions from sources controlled by VOC combustor shown in following tables.

SWN Production Company, LLC
State of WV DNR B Pad
Vapor Combustor Emissions Calculations - Criteria and Hazardous Air Pollutants (Continued)

Source	Captured VOC Emissions	
	lb/hr	TPY
Condensate Storage Tanks	67.41	295.27
Produced Water Storage Tanks	0.26	1.12
Condensate Truck Loading	0.51	2.23
Produced Water Truck Loading	0.04	0.18
Total VOC =	**68.22**	**298.80**

Source	Captured HAP Emissions (lb/hr)				
	n-Hexane	Benzene	Toluene	Ethylbenzene	Xylenes
Condensate Storage Tanks	3.72	0.05	0.24	0.24	1.12
Produced Water Storage Tanks	0.01	<0.01	<0.01	<0.01	<0.01
Condensate Truck Loading	0.03	<0.01	<0.01	<0.01	0.01
Produced Water Truck Loading	<0.01	<0.01	<0.01	<0.01	<0.01
Total HAP =	**3.76**	**0.05**	**0.24**	**0.24**	**1.13**

Source	Captured HAP Emissions (TPY)				
	n-Hexane	Benzene	Toluene	Ethylbenzene	Xylenes
Condensate Storage Tanks	16.31	0.20	1.06	1.05	4.92
Produced Water Storage Tanks	0.06	<0.01	<0.01	<0.01	0.02
Condensate Truck Loading	0.12	<0.01	0.01	0.01	0.04
Produced Water Truck Loading	0.01	<0.01	<0.01	<0.01	<0.01
Total HAP =	**16.50**	**0.20**	**1.07**	**1.06**	**4.98**

SWN Production Company, LLC
State of WV DNR B Pad
Vapor Combustor Emissions Calculations - Greenhouse Gases

Equipment Information

Unit ID:	**APC-COMB-TKLD**
Description:	Vapor Combustor
Number of Combustors:	1
Burner Design Capacity (mmBtu/hr):	15.0
Stream HHV (Btu/scf):	2,450
Annual Throughput (mmscf):	53.63
Annual Operating Hours:	8,760

Greenhouse Gas (GHG) Emissions

Pollutant	lb/hr	tonnes/yr	tons/yr
CO_2	1,754.66	6,972.07	7,685.39
CH_4	0.03	0.13	0.14
N_2O	<0.01	0.01	0.01
CH_4 as CO_2e	0.83	3.28	3.62
N_2O as CO_2e	0.99	3.92	4.32
Total CO_2 + CO_2e =	**1,756.47**	**6,979.27**	**7,693.33**

40 CFR 98 Tables C-1 and C-2 Emission Factors (kg/mmBtu)[1]

Carbon Dioxide (CO_2)	53.06
Methane (CH_4)	1.00E-03
Nitrous Oxide (N_2O)	1.00E-04

Notes:
[1] CO_2e = CO_2 equivalent (Pollutant times GWP multiplier):
40 CFR 98 Table A-1, Global Warming Potential (GWP) multiplier: CO_2 = 1, CH_4 = 25, N_2O = 298

SWN Production Company, LLC
State of WV DNR B Pad
Fugitive Emissions Calculations - Criteria and Hazardous Air Pollutants and Greenhouse Gases

Equipment Information

Source Type/Service	Number of Sources[1]	Em. Factor (lb/hr/source)[2]	Control Efficiency	TOC lb/hr	TOC TPY	VOC Wt %
Valves - Gas	32	9.92E-03	0.00%	0.32	1.40	27.42%
Flanges - Gas	124	8.60E-04	0.00%	0.11	0.48	27.42%
Relief Valves - Gas	13	1.94E-02	0.00%	0.25	1.10	27.42%
			Total TOC (Gas Components) =	**0.68**	**2.98**	-
Valves - Light Oil	43	5.51E-03	0.00%	0.24	1.05	97.19%
Flanges - Light Oil	166	2.43E-04	0.00%	0.04	0.18	97.19%
			Total TOC (Liquid Components) =	**0.28**	**1.23**	-

VOC and Greenhouse Gas Emissions

Source Type/Service	VOC		CH_4		CO_2	
	lb/hr	TPY	lb/hr	TPY	lb/hr	TPY
Valves - Gas	0.09	0.38	0.16	0.69	<0.01	<0.01
Flanges - Gas	0.03	0.13	0.05	0.24	<0.01	<0.01
Relief Valves - Gas	0.07	0.30	0.12	0.54	<0.01	<0.01
Components in Gas Service =	**0.19**	**0.81**	**0.33**	**1.46**	**<0.01**	**0.01**
Valves - Light Oil	0.23	1.01	<0.01	0.01	<0.01	<0.01
Flanges - Light Oil	0.04	0.17	<0.01	<0.01	<0.01	<0.01
Components in Liquid Service =	**0.27**	**1.20**	**0.00**	**0.01**	**<0.01**	**<0.01**
Total (Gas + Liquid Components) =	**0.46**	**2.01**	**0.34**	**1.47**	**<0.01**	**0.01**

SWN Production Company, LLC
State of WV DNR B Pad
Fugitive Emissions Calculations (Continued)

Hazardous Air Pollutant (HAP) Emissions (lb/hr)

Source Type/Service	n-Hexane	Benzene	Toluene	Ethylbenzene	Xylenes	2,2,4-Tri.	Total
Valves - Gas	<0.01	<0.01	<0.01	<0.01	<0.01	0.00	<0.01
Flanges - Gas	<0.01	<0.01	<0.01	<0.01	<0.01	0.00	<0.01
Relief Valves - Gas	<0.01	<0.01	<0.01	<0.01	<0.01	0.00	<0.01
Components in Gas Service =	**<0.01**	**<0.01**	**<0.01**	**<0.01**	**<0.01**	**0.00**	**<0.01**
Valves - Light Oil	0.01	<0.01	<0.01	<0.01	<0.01	0.00	0.02
Flanges - Light Oil	<0.01	<0.01	<0.01	<0.01	<0.01	0.00	<0.01
Components in Liquid Service =	**0.02**	**<0.01**	**<0.01**	**<0.01**	**<0.01**	**0.00**	**0.02**
Total (Gas + Liquid Components) =	**0.02**	**<0.01**	**<0.01**	**<0.01**	**<0.01**	**0.00**	**0.03**

Hazardous Air Pollutant (HAP) Emissions (TPY)

Source Type/Service	n-Hexane	Benzene	Toluene	Ethylbenzene	Xylenes	2,2,4-Tri.	Total
Valves - Gas	0.01	<0.01	<0.01	<0.01	<0.01	0.00	0.01
Flanges - Gas	<0.01	<0.01	<0.01	<0.01	<0.01	0.00	<0.01
Relief Valves - Gas	0.01	<0.01	<0.01	<0.01	<0.01	0.00	0.01
Components in Gas Service =	**0.02**	**<0.01**	**<0.01**	**<0.01**	**<0.01**	**0.00**	**0.02**
Valves - Light Oil	0.06	<0.01	<0.01	<0.01	0.02	0.00	0.09
Flanges - Light Oil	0.01	<0.01	<0.01	<0.01	<0.01	0.00	0.01
Components in Liquid Service =	**0.07**	**<0.01**	**<0.01**	**<0.01**	**0.02**	**0.00**	**0.10**
Total (Gas + Liquid Components) =	**0.09**	**<0.01**	**<0.01**	**<0.01**	**0.02**	**0.00**	**0.12**

SWN Production Company, LLC
State of WV DNR B Pad
Fugitive Emissions Calculations (Continued)

Typical Component Count per Equipment Type based on Representative Facility[3]

Source Type/Service	WH	GPU	HT	LPT	FGC	OT	TT-O
Valves - Gas	12	3	2	5	5	0	0
Flanges - Gas	37	15	9	24	33	3	2
Compressor Seals - Gas	0	0	0	0	3	0	0
Relief Valves - Gas	1	3	1	1	1	1	1
Open-Ended Lines - Gas	0	0	0	0	0	0	0
Valves - Light Oil	0	5	6	12	3	6	9
Connectors - Light Oil	0	20	24	48	12	24	30
Pump Seals - Light Oil	0	0	0	0	0	0	0
Other - Light Oil	0	0	0	0	0	0	0

Equipment Type	WH	GPU	HT	LPT	FGC	OT	TT-O
Number of Each Type On Pad =	2	2	1	0	0	3	1

SWN Production Company, LLC
State of WV DNR B Pad
Fugitive Emissions Calculations (Continued)

Speciated Gas Analysis[4]

Component	Molecular Weight	Mole %	Equiv. Wt. Basis	Weight %	HC Weight %	lb/hr	TPY
Hydrogen Sulfide	34.082	0.0000%	0.000	0.000%	-	0.00	0.00
Carbon Dioxide	44.010	0.1310%	0.058	0.251%	-	<0.01	0.01
Nitrogen	28.013	0.5440%	0.152	0.664%	-	<0.01	0.02
Methane	16.042	69.5060%	11.150	48.550%	48.998%	0.33	1.46
Ethane	30.069	17.8450%	5.366	23.364%	23.579%	0.16	0.70
Propane	44.096	7.4600%	3.290	14.323%	14.456%	0.10	0.43
i-Butane	58.122	0.7250%	0.421	1.835%	1.852%	0.01	0.06
n-Butane	58.122	2.2300%	1.296	5.644%	5.696%	0.04	0.17
i-Pentane	72.149	0.3940%	0.284	1.238%	1.249%	0.01	0.04
n-Pentane	72.149	0.6140%	0.443	1.929%	1.947%	0.01	0.06
n-Hexane	86.175	0.1770%	0.153	0.664%	0.670%	<0.01	0.02
Other Hexanes	86.175	0.1990%	0.171	0.747%	0.754%	0.01	0.02
Heptanes (as n-Heptane)	100.202	0.1240%	0.124	0.541%	0.546%	<0.01	0.02
Benzene	78.114	0.0020%	0.002	0.007%	0.007%	<0.01	<0.01
Toluene	92.141	0.0030%	0.003	0.012%	0.012%	<0.01	<0.01
Ethylbenzene	106.167	0.0010%	0.001	0.005%	0.005%	<0.01	<0.01
Xylenes	106.167	0.0020%	0.002	0.009%	0.009%	<0.01	<0.01
2,2,4-Trimethylpentane	114.230	0.0000%	0.000	0.000%	0.000%	0.00	0.00
Octanes (as n-Octane)	114.229	0.0350%	0.040	0.174%	0.176%	<0.01	0.01
Nonanes (as n-Nonane)	128.255	0.0070%	0.009	0.039%	0.039%	<0.01	<0.01
Decanes (as n-Decane)	142.282	0.0010%	0.001	0.006%	0.006%	<0.01	<0.01
	TOTAL =	**100.00%**	**22.97**	**100.00%**	**100.00%**	**0.69**	**3.01**
		TOTAL HC =	**22.76**	**TOTAL VOC =**	**27.42%**	**0.18**	**0.82**
				TOTAL HAP =	**0.70%**	**<0.01**	**0.02**

SWN Production Company, LLC
State of WV DNR B Pad
Fugitive Emissions Calculations (Continued)

Speciated Liquids Analysis[4]

Component	Molecular Weight	Mole %	Equiv. Wt. Basis	Weight %	HC Weight %	lb/hr	TPY
Hydrogen Sulfide	34.082	0.000%	0.000	0.000%	-	0.00	0.00
Carbon Dioxide	44.010	0.015%	0.007	0.007%	-	<0.01	<0.01
Nitrogen	28.013	0.016%	0.004	0.005%	-	<0.01	<0.01
Methane	16.042	4.241%	0.680	0.753%	0.753%	<0.01	0.01
Ethane	30.069	6.176%	1.857	2.054%	2.054%	0.01	0.03
Propane	44.096	8.547%	3.769	4.169%	4.169%	0.01	0.05
i-Butane	58.122	1.876%	1.090	1.206%	1.206%	<0.01	0.01
n-Butane	58.122	8.305%	4.827	5.339%	5.340%	0.01	0.07
i-Pentane	72.149	3.379%	2.438	2.696%	2.697%	0.01	0.03
n-Pentane	72.149	6.936%	5.004	5.535%	5.536%	0.02	0.07
n-Hexane	86.175	5.794%	4.993	5.523%	5.523%	0.02	0.07
Other Hexanes	86.175	5.761%	4.965	5.491%	5.492%	0.02	0.07
Heptanes (as n-Heptane)	100.202	11.190%	11.213	12.402%	12.403%	0.03	0.15
Benzene	78.114	0.080%	0.062	0.069%	0.069%	<0.01	<0.01
Toluene	92.141	0.353%	0.325	0.360%	0.360%	<0.01	<0.01
Ethylbenzene	106.167	0.304%	0.323	0.357%	0.357%	<0.01	<0.01
Xylenes	106.167	1.420%	1.508	1.667%	1.668%	<0.01	0.02
2,2,4-Trimethylpentane	114.230	0.000%	0.000	0.000%	0.000%	0.00	0.00
Octanes (as n-Octane)	114.229	9.004%	10.285	11.376%	11.377%	0.03	0.14
Nonanes (as n-Nonane)	128.255	5.630%	7.221	7.987%	7.988%	0.02	0.10
Decanes (as n-Decane)	142.282	20.972%	29.839	33.004%	33.008%	0.09	0.41
	TOTAL =	**100.00%**	**90.41**	**100.00%**	**100.00%**	**0.28**	**1.23**
		TOTAL HC =	**90.40**	**TOTAL VOC =**	**97.19%**	**0.27**	**1.20**
				TOTAL HAP =	**7.98%**	**0.02**	**0.10**

Notes:

[1] Component counts taken by equipment type at representative facility and made site-specific according to the number of each equipment type at this site.

[2] Emission Factor Source: EPA-453/R-95-017. TOC multiplied by pollutant content of streams (weight %) to obtain pollutant emissions.

[3] Equipment Type Key: WH = Well Head, GPU = Gas Production Unit, HT = Heater Treater, LPT = Low-Pressure Tower, FGC = Flash Gas Compressor, OT = Oil Tank, TT-O = Tank Truck - Oil

[4] Representative gas and liquids analyses (Mark Owen No. 8-H) located in Appendix A.

SWN Production Company, LLC
State of WV DNR B Pad
Fugitive Haul Road Emissions

Facility Data[1]

Vehicle Type	Light Vehicles (Pick-ups and Cars)	Medium Trucks (Service Trucks)	Heavy Trucks (Tanker Trucks)[2]
Average vehicle weight ((empty + full)/2) (tons)	2	15	23.5
Number of wheels per vehicle type (w)	4	10	18
Average number of round trips/day/vehicle type	1	1	0
Distance per round trip (miles/trip)	0.76	0.76	0.76
Vehicle miles travelled (miles/day)	0.76	0.76	0.27
Number of days operational (days/yr)	365	365	365
Vehicle miles travelled VMT (miles/yr)	277	277	97
Average vehicle speed S (mph)	10	10	10
Average number of round trips/hour/vehicle type	0.06	0.06	0.02
Average number of round trips/year/vehicle type	365	365	128
Estimated maximum number of round trips/hour/vehicle type	2	1	1
Estimated maximum number of round trips/day/vehicle type	5	2	3
Estimated maximum number of round trips/year/vehicle type	1,917	767	1,150

190	Average Tanker Volume (bbl)
7,980	Gallons Tanker Volume
5	bwpd
62	bopd
0.35	Tanker Trucks per Day
1,500	Length Leased Access Road (ft)
500	Longest Pad Side (ft)
4,000	Total Round Trip Feet

Formula & Calculation Inputs

$E=k(s/12)^a * (W/3)^b * ((365-P) / 365)$

Reference : AP-42, Section 13.2.2 (11/06), Equation 1a and 2

where:

	Rate	Units	Comment
Days per year	365		
Annual average hours per day of road operations	18		
k = PM Particle Size Multiplier	4.90	lb/VMT	AP-42 Section 13.2.2 (11/06), Table 13.2.2-2 (PM)
k = PM10 Particle Size Multiplier	1.50	lb/VMT	AP-42 Section 13.2.2 (11/06), Table 13.2.2-2 (PM_{10})
k = PM2.5 Particle Size Multiplier	0.15	lb/VMT	AP-42 Section 13.2.2 (11/06), Table 13.2.2-2 ($PM_{2.5}$)
s = Surface Material Silt Content	3.9	%	State Default Data from AP-42 Data (1999 NEI Data)
P = Number of days > 0.01 inch of rain	150	days/year	AP-42 Section 13.2.2 (11/06), Figure 13.2.2-1
a = PM Constant	0.70	unitless	AP-42 Section 13.2.2 (11/06), Table 13.2.2-2 (PM)
a = PM10 & PM2.5 Constant	0.90	unitless	AP-42 Section 13.2.2 (11/06), Table 13.2.2-2 (PM_{10} & $PM_{2.5}$)
b = PM, PM10, & PM2.5 Constant	0.45	unitless	AP-42 Section 13.2.2 (11/06), Table 13.2.2-2
Total hourly fleet vehicle miles travelled (miles/hr)	0.10	VMT/hr	
Total annual fleet vehicle miles travelled (miles/yr)[3]	651.00	VMT/yr	
Average wheels[4]	9		
Average vehicle weight of the fleet (W)[5]	10.7	tons	
Moisture Ratio	1.00		Estimated based on 0.2% uncontrolled surface water content assuming no watering
Control Efficiency (CF)	0.00	%	Based on Moisture Ratio and Figure 13.2.2-2 Control

EPA - BID Document 13.2.2 - 1998

Continued on Next Page

SWN Production Company, LLC
State of WV DNR B Pad
Fugitive Haul Road Emissions

Emission Calculations

Vehicle Type	Emission Factors			Control Efficiency	Total Vehicle Miles Travelled		Uncontrolled Emission Rates			Uncontrolled Emission Rates		
	PM	PM_{10}	$PM_{2.5}$				Total PM	Total PM_{10}	$PM_{2.5}$	Total PM	Total PM_{10}	$PM_{2.5}$
	(lbs/VMT)	(lbs/VMT)	(lbs/VMT)	(%)	(VMT/hr)	(VMT/yr)	(lb/hr)	(lb/hr)	(lb/hr)	(tons/yr)	(tons/yr)	(tons/yr)
Light Vehicles	2.33	0.57	0.06	0.00	0.04	277.00	0.10	0.02	<0.01	0.32	0.08	0.01
Medium Trucks	2.33	0.57	0.06	0.00	0.04	277.00	0.10	0.02	<0.01	0.32	0.08	0.01
Heavy Trucks	2.33	0.57	0.06	0.00	0.01	97.00	0.03	0.01	<0.01	0.11	0.03	<0.01
			Total =	**0.00**	**0.09**	**651.00**	**0.23**	**0.05**	**0.01**	**0.75**	**0.19**	**0.02**

Notes:

1) Facility vehicle data based on estimates, GP5.1 and AP-42 13.2.2-2 defaults for industrial unpaved roads
2) Tank trucker average vehicle weight as $(W_{(empty)}+W_{(full)})/2 = (7 + 40)/2 = 23.7$ tons
3) Average vehicle miles travelled (VMT/yr) as (No. of round trip/vehicle * No. of vehicles/type * Roundtrip miles/trip)* 365 days/yr * No. of vehicle type)
4) Average wheels calculated as average of (No. of wheels per vehicle type * No. of vehicle/type)
5) Average vehicle fleet calculated as (Average weight of vehicle type * Percentage of each vehicle type on unpaved surface). Percentage of each vehicle type= $VMT_{vehicle\ type}/VMT$
6) Minimum one-per-day average pick-up trucks and service trucks even if tanker not required every day.
7) Per EPA BID calculations, all emissions based on average trips. Estimated maximum hourly, daily and yearly trips provided for information only.

Calculation of Emission Factors (AP-42, 13.2.2)

Equation 1a: $EF = k(s/12)^a (W/3)^b$ *where k, a, and b are empirical constants and*

EF = size-specific emission factor (lb/VMT)

s = surface material silt content %

W = mean vehicle weight (tons)

Equation 2: $EF_{ext} = EF*((365-P)/365)$ *where:*

EF_{ext} *= annual size-specific emission factor extrapolated for natural mitigation, lb/VMT*

EF = emission factor from Equation 1a

P = number of days in a year with at least 0.01 inches of precipitation

Calculation of Emissions

$E = EF_{ext} * VMT/yr * ((1-CF)/100) * 1\ ton/2000\ lbs$ *where:*

E = annual emissions (tons/yr)

EF_{ext} *= annual size-specific emission factor extrapolated for natural mitigation, lb/VMT*

CF = control efficiency (%)

APPENDIX A: SUPPORT DOCUMENTS

AP-42 AND EPA EMISSION FACTORS

REPRESENTATIVE GAS AND LIQUIDS ANALYSES

PROMAX PROCESS SIMULATION RESULTS

EPA TANKS 4.0.9d EMISSIONS REPORTS

loading operation, resulting in high levels of vapor generation and loss. If the turbulence is great enough, liquid droplets will be entrained in the vented vapors.

A second method of loading is submerged loading. Two types are the submerged fill pipe method and the bottom loading method. In the submerged fill pipe method, the fill pipe extends almost to the bottom of the cargo tank. In the bottom loading method, a permanent fill pipe is attached to the cargo tank bottom. During most of submerged loading by both methods, the fill pipe opening is below the liquid surface level. Liquid turbulence is controlled significantly during submerged loading, resulting in much lower vapor generation than encountered during splash loading.

The recent loading history of a cargo carrier is just as important a factor in loading losses as the method of loading. If the carrier has carried a nonvolatile liquid such as fuel oil, or has just been cleaned, it will contain vapor-free air. If it has just carried gasoline and has not been vented, the air in the carrier tank will contain volatile organic vapors, which will be expelled during the loading operation along with newly generated vapors.

Cargo carriers are sometimes designated to transport only one product, and in such cases are practicing "dedicated service". Dedicated gasoline cargo tanks return to a loading terminal containing air fully or partially saturated with vapor from the previous load. Cargo tanks may also be "switch loaded" with various products, so that a nonvolatile product being loaded may expel the vapors remaining from a previous load of a volatile product such as gasoline. These circumstances vary with the type of cargo tank and with the ownership of the carrier, the petroleum liquids being transported, geographic location, and season of the year.

One control measure for vapors displaced during liquid loading is called "vapor balance service", in which the cargo tank retrieves the vapors displaced during product unloading at bulk plants or service stations and transports the vapors back to the loading terminal. Figure 5.2-5 shows a tank truck in vapor balance service filling a service station underground tank and taking on displaced gasoline vapors for return to the terminal. A cargo tank returning to a bulk terminal in vapor balance service normally is saturated with organic vapors, and the presence of these vapors at the start of submerged loading of the tanker truck results in greater loading losses than encountered during nonvapor balance, or "normal", service. Vapor balance service is usually not practiced with marine vessels, although some vessels practice emission control by means of vapor transfer within their own cargo tanks during ballasting operations, discussed below.

Emissions from loading petroleum liquid can be estimated (with a probable error of ±30 percent)[4] using the following expression:

$$L_L = 12.46 \frac{SPM}{T} \qquad (1)$$

where:

L_L = loading loss, pounds per 1000 gallons (lb/10^3 gal) of liquid loaded

S = a saturation factor (see Table 5.2-1)
P = true vapor pressure of liquid loaded, pounds per square inch absolute (psia) (see Figure 7.1-5, Figure 7.1-6, and Table 7.1-2)
M = molecular weight of vapors, pounds per pound-mole (lb/lb-mole) (see Table 7.1-2)
T = temperature of bulk liquid loaded, °R (°F + 460)

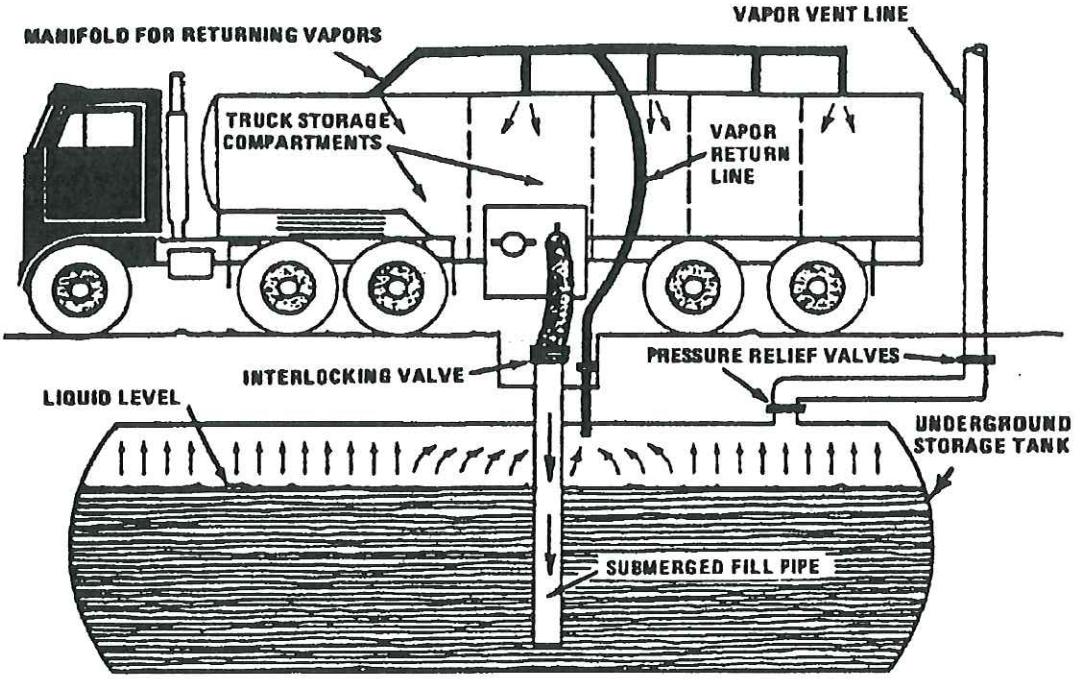

Figure 5.2-5. Tank truck unloading into a service station underground storage tank and practicing "vapor balance" form of emission control.

Table 5.2-1. SATURATION (S) FACTORS FOR CALCULATING PETROLEUM LIQUID LOADING LOSSES

Cargo Carrier	Mode Of Operation	S Factor
Tank trucks and rail tank cars	Submerged loading of a clean cargo tank	0.50
	Submerged loading: dedicated normal service	0.60
	Submerged loading: dedicated vapor balance service	1.00
	Splash loading of a clean cargo tank	1.45
	Splash loading: dedicated normal service	1.45
	Splash loading: dedicated vapor balance service	1.00
Marine vessels[a]	Submerged loading: ships	0.2
	Submerged loading: barges	0.5

[a] For products other than gasoline and crude oil. For marine loading of gasoline, use factors from Table 5.2-2. For marine loading of crude oil, use Equations 2 and 3 and Table 5.2-3.

Since flares do not lend themselves to conventional emission testing techniques, only a few attempts have been made to characterize flare emissions. Recent EPA tests using propylene as flare gas indicated that efficiencies of 98 percent can be achieved when burning an offgas with at least 11,200 kJ/m^3 (300 Btu/ft^3). The tests conducted on steam-assisted flares at velocities as low as 39.6 meters per minute (m/min) (130 ft/min) to 1140 m/min (3750 ft/min), and on air-assisted flares at velocities of 180 m/min (617 ft/min) to 3960 m/min (13,087 ft/min) indicated that variations in incoming gas flow rates have no effect on the combustion efficiency. Flare gases with less than 16,770 kJ/m^3 (450 Btu/ft^3) do not smoke.

Table 13.5-1 presents flare emission factors, and Table 13.5-2 presents emission composition data obtained from the EPA tests.[1] Crude propylene was used as flare gas during the tests. Methane was a major fraction of hydrocarbons in the flare emissions, and acetylene was the dominant intermediate hydrocarbon species. Many other reports on flares indicate that acetylene is always formed as a stable intermediate product. The acetylene formed in the combustion reactions may react further with hydrocarbon radicals to form polyacetylenes followed by polycyclic hydrocarbons.[2]

In flaring waste gases containing no nitrogen compounds, NO is formed either by the fixation of atmospheric nitrogen (N) with oxygen (O) or by the reaction between the hydrocarbon radicals present in the combustion products and atmospheric nitrogen, by way of the intermediate stages, HCN, CN, and OCN.[2] Sulfur compounds contained in a flare gas stream are converted to SO_2 when burned. The amount of SO_2 emitted depends directly on the quantity of sulfur in the flared gases.

Table 13.5-1 (English Units). EMISSION FACTORS FOR FLARE OPERATIONS[a]

EMISSION FACTOR RATING: B

Component	Emission Factor ($lb/10^6$ Btu)
Total hydrocarbons[b]	0.14
Carbon monoxide	0.37
Nitrogen oxides	0.068
Soot[c]	0 - 274

[a] Reference 1. Based on tests using crude propylene containing 80% propylene and 20% propane.
[b] Measured as methane equivalent.
[c] Soot in concentration values: nonsmoking flares, 0 micrograms per liter (μg/L); lightly smoking flares, 40 μg/L; average smoking flares, 177 μg/L; and heavily smoking flares, 274 μg/L.

TABLE 2-4. OIL AND GAS PRODUCTION OPERATIONS AVERAGE EMISSION FACTORS (kg/hr/source)

Equipment Type	Service[a]	Emission Factor (kg/hr/source)[b]
Valves	Gas	4.5E-03
	Heavy Oil	8.4E-06
	Light Oil	2.5E-03
	Water/Oil	9.8E-05
Pump seals	Gas	2.4E-03
	Heavy Oil	NA
	Light Oil	1.3E-02
	Water/Oil	2.4E-05
Others[c]	Gas	8.8E-03
	Heavy Oil	3.2E-05
	Light Oil	7.5E-03
	Water/Oil	1.4E-02
Connectors	Gas	2.0E-04
	Heavy Oil	7.5E-06
	Light Oil	2.1E-04
	Water/Oil	1.1E-04
Flanges	Gas	3.9E-04
	Heavy Oil	3.9E-07
	Light Oil	1.1E-04
	Water/Oil	2.9E-06
Open-ended lines	Gas	2.0E-03
	Heavy Oil	1.4E-04
	Light Oil	1.4E-03
	Water/Oil	2.5E-04

[a]Water/Oil emission factors apply to water streams in oil service with a water content greater than 50%, from the point of origin to the point where the water content reaches 99%. For water streams with a water content greater than 99%, the emission rate is considered negligible.

[b]These factors are for total organic compound emission rates (including non-VOC's such as methane and ethane) and apply to light crude, heavy crude, gas plant, gas production, and off shore facilities. "NA" indicates that not enough data were available to develop the indicated emission factor.

[c]The "other" equipment type was derived from compressors, diaphrams, drains, dump arms, hatches, instruments, meters, pressure relief valves, polished rods, relief valves, and vents. This "other" equipment type should be applied for any equipment type other than connectors, flanges, open-ended lines, pumps, or valves.

Chesapeake Energy Corporation
Mark Owen No. 8-H

TABLE 1-B

COMPOSITIONAL ANALYSIS OF THE SEPARATOR GAS, OIL AND MATHEMATICALLY RECOMBINED WELLSTREAM THROUGH C_{11+}

SEPARATOR GOR.....: 7195 Scf/Sep Bbl
SEPARATOR PRESSURE.....: 204 psig
SEPARATOR TEMPERATURE.....: 94 °F

	SEPARATOR GAS		SEPARATOR OIL		WELLSTREAM	
Component	Mole%	* GPM	Mole %	Liquid Volume %	Mole %	* GPM
Hydrogen Sulfide	0.000	0.000	0.000	0.000	0.000	0.000
Nitrogen	0.544	0.000	0.016	0.004	0.482	0.000
Carbon Dioxide	0.131	0.000	0.015	0.006	0.118	0.000
Methane	69.506	0.000	4.241	1.639	61.889	0.000
Ethane	17.845	4.810	6.176	3.767	16.483	4.443
Propane	7.460	2.072	8.547	5.370	7.587	2.107
Iso-butane	0.725	0.239	1.876	1.400	0.859	0.283
N-butane	2.230	0.709	8.305	5.971	2.939	0.934
2-2 Dimethylpropane	0.007	0.003	0.063	0.055	0.014	0.005
Iso-pentane	0.381	0.140	3.316	2.766	0.724	0.267
N-pentane	0.614	0.224	6.936	5.734	1.352	0.494
2-2 Dimethylbutane	0.007	0.003	0.100	0.095	0.018	0.008
Cyclopentane	0.006	0.002	0.000	0.000	0.005	0.002
2-3 Dimethylbutane	0.012	0.005	0.286	0.267	0.044	0.018
2 Methylpentane	0.097	0.041	2.339	2.214	0.359	0.150
3 Methylpentane	0.055	0.023	1.481	1.378	0.221	0.091
Other Hexanes	0.000	0.000	0.000	0.000	0.000	0.000
n-Hexane	0.177	0.073	5.794	5.434	0.833	0.345
Methylcyclopentane	0.012	0.004	0.688	0.555	0.091	0.032
Benzene	0.002	0.001	0.080	0.051	0.011	0.003
Cyclohexane	0.016	0.005	0.867	0.673	0.115	0.040
2-Methylhexane	0.022	0.010	1.979	2.098	0.250	0.117
3-Methylhexane	0.023	0.011	1.827	1.913	0.234	0.108
2,2,4 Trimethylpentane	0.000	0.000	0.000	0.000	0.000	0.000
Other Heptanes	0.021	0.009	0.825	0.818	0.115	0.050
n-Heptane	0.042	0.020	4.616	4.856	0.576	0.268
Methylcyclohexane	0.016	0.006	1.943	1.781	0.241	0.098
Toluene	0.003	0.001	0.353	0.270	0.044	0.015
Other C-8's	0.026	0.012	5.933	6.336	0.715	0.338
n-Octane	0.009	0.005	3.071	3.587	0.366	0.189
Ethylbenzene	0.001	0.000	0.304	0.268	0.036	0.014
M&P-Xylene	0.001	0.000	0.599	0.530	0.071	0.028
O-Xylene	0.001	0.000	0.821	0.712	0.097	0.037
Other C-9's	0.006	0.003	3.670	4.378	0.434	0.229
n-Nonane	0.001	0.001	1.960	2.516	0.230	0.130
Other C10's	0.000	0.000	3.963	5.195	0.463	0.268
n-Decane	0.000	0.000	1.231	1.724	0.144	0.089
Undecanes Plus	0.001	0.001	15.778	25.640	1.842	1.323
TOTAL	100.000	8.433	100.000	100.000	100.000	12.522

TABLE 1-B

COMPOSITIONAL ANALYSIS OF THE SEPARATOR GAS, OIL AND MATHEMATICALLY RECOMBINED WELLSTREAM THROUGH C_{11+}

SEPARATOR GOR.....: 7195 Scf/Sep Bbl
SEPARATOR PRESSURE.....: 204 psig
SEPARATOR TEMPERATURE.....: 94 °F

UNDECANES PLUS (C_{11+}) FRACTION CHARACTERISTICS					
	Specific Gravity		Molecular Weight	Vapor Volume	Gross Heating Value
COMPONENT	°API	**	lb/lb-mole	Scf/Gal	***
Gas	N/A	0.8250	156.000	16.558	8,400
Oil	41.256	0.8191	184.200	13.922	129,541
Wellstream	N/A	0.8191	184.186	13.923	N/A

TOTAL SAMPLE CHARACTERISTICS						
	Specific Gravity		Molecular Weight	Vapor Volume	Gross Heating Value	
					Dry	Saturated
COMPONENT	°API	**	lb/lb-mole	Scf/Gal	***	***
Gas	N/A	0.7966	22.965	118.576	1,391	1,368
Oil	71.218	0.6980	96.596	22.625	N/A	117,348
Wellstream	N/A	1.0896	31.558	43.165	N/A	N/A

* GPM (gallons per Mscf) determined at 14.85 psia and 60 °F

** Gas specific gravity and wellstream specific gravity determined relative to air (SG=1.000).
Oil specific gravity determined relative to water (SG=1.000).

*** Gross Heating Value units for gas (real basis) and oil are BTU/Scf and BTU/Gal, respectively.

Proposed
Plant Schematic

Client Name:		Job: Compressor Release
Location:	STATE OF WV DNR B	
Flowsheet:	Proposed	

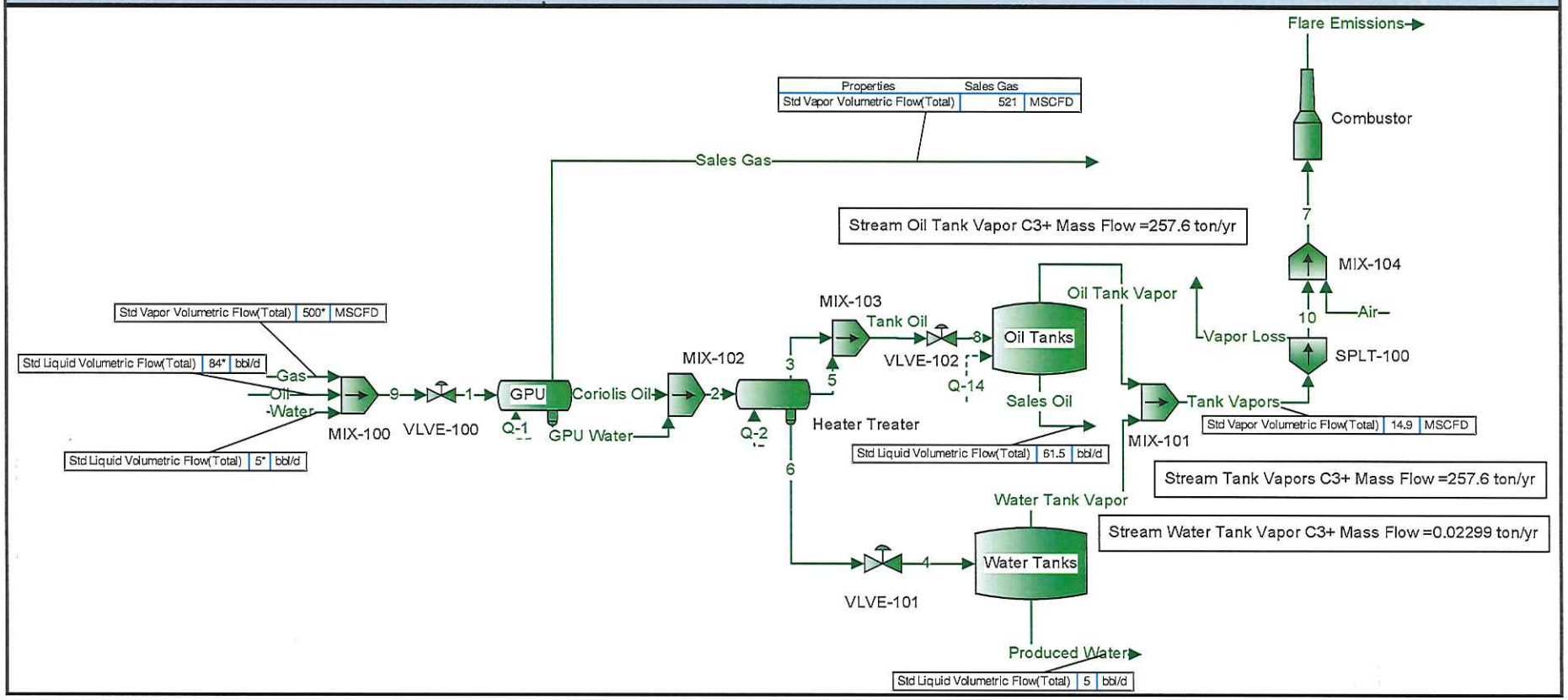

* User Specified Values
? Extrapolated or Approximate Values

ProMax 3.2.13330.0
Copyright © 2002-2012 BRE Group, Ltd.

Licensed to Southwestern Energy Company

Process Streams Report
All Streams
Tabulated by Total Phase

Client Name:		Job: Compressor Release
Location:	STATE OF WV DNR B	
Flowsheet:	Proposed	

Connections

	Produced Water	Sales Gas	Sales Oil	Tank Oil	Tank Vapors
From Block	Water Tanks	GPU	Oil Tanks	MIX-103	MIX-101
To Block	--	--	--	VLVE-102	SPLT-100

Stream Composition

Mole Fraction	Produced Water %	Sales Gas %	Sales Oil %	Tank Oil %	Tank Vapors %
H2S	0	0	0	0	0
N2	1.3645E-08	0.549385	7.08367E-05	0.010153	0.0385401
CO2	4.98342E-05	0.196906	0.00254901	0.0393074	0.143357
C1	2.0692E-05	70.7153	0.0798637	3.97167	14.9314
C2	2.67206E-05	17.4291	0.622337	5.91632	20.8235
C3	2.16776E-05	7.31178	2.73545	9.02253	26.7234
iC4	3.17252E-07	0.636446	1.13151	2.00959	4.48104
nC4	5.33356E-06	1.95677	5.94075	8.81126	16.8905
2,2-Dimethylbutane	4.19711E-10	0.00267051	0.0763754	0.0672415	0.0415002
iC5	3.5884E-07	0.277197	3.09282	3.20549	3.52156
nC5	6.3279E-07	0.441051	7.05348	6.8151	6.1415
2,2-Dimethylpropane	9.43181E-09	0.0182982	0.089748	0.114157	0.182837
Cyclopentane	4.94464E-08	0.00117386	0.0268795	0.0244941	0.0177718
2,3-Dimethylbutane	7.62296E-10	0.00101973	0.0410824	0.0347309	0.0168357
2-Methylpentane	1.98186E-08	0.0550771	2.51771	2.1025	0.932713
3-Methylpentane	6.66887E-08	0.0271038	1.38615	1.1453	0.46679
C6	2.02405E-08	0.0884209	5.78187	4.68053	1.57804
Methylcyclopentane	2.18139E-07	0.0126237	0.825497	0.66825	0.225303
Benzene	3.50665E-05	0.00163142	0.101927	0.0827547	0.028817
Cyclohexane	6.68134E-07	0.0127895	1.05432	0.838642	0.231148
2-Methylhexane	2.21525E-09	0.0112566	1.83844	1.41482	0.221639
3-Methylhexane	2.18438E-09	0.0100276	1.70357	1.30884	0.197048
2,2,4-Trimethylpentane	0	0	0	0	0
C7	4.90768E-09	0.0273081	5.84842	4.45697	0.537792
Methylcyclohexane	1.02781E-07	0.0113789	2.32159	1.77225	0.224987
Toluene	3.29898E-05	0.00189763	0.46346	0.351975	0.0380466
C8	1.65894E-09	0.0134215	9.41257	7.02095	0.284944
Ethylbenzene	7.92904E-06	0.000564897	0.420711	0.313644	0.0121135
m-Xylene	9.73009E-06	0.000625419	0.558233	0.415529	0.0136311
o-Xylene	4.69865E-06	0.000188814	0.186135	0.138445	0.00413542
C9	9.26814E-10	0.00304531	6.8601	5.08093	0.0699449
C10	9.39399E-11	0.000875726	5.99202	4.42739	0.0206798
C11	3.34234E-11	0.000207479	4.85595	3.58495	0.00522746
C12	9.23726E-13	6.23881E-05	3.81974	2.81931	0.00163202
C13	5.22164E-12	1.4859E-05	3.19244	2.35605	0.00041234
C14	2.95076E-12	3.47265E-06	2.69139	1.98621	0.0001023
C15	5.52773E-14	1.14523E-06	2.26669	1.67278	3.45439E-05
C16	9.2015E-16	3.26334E-07	1.78999	1.32097	1.01417E-05
C17	6.11692E-19	1.00483E-07	1.41738	1.046	3.16468E-06
C18	1.84549E-18	3.09969E-08	1.32606	0.978601	1.08129E-06
C19	0	9.35131E-09	1.16532	0.859983	3.42233E-07
C20	0	2.16529E-09	0.949794	0.700927	8.49144E-08
C21	0	5.59882E-10	0.675815	0.498736	2.29082E-08
C22	0	2.24387E-10	0.670336	0.494692	9.47737E-09
C23	0	4.41503E-11	0.491336	0.362595	2.00404E-09
C24	0	1.03771E-11	0.363479	0.268239	4.98267E-10
C25	0	3.1858E-12	0.306857	0.226453	1.6039E-10
C26	0	1.09992E-12	0.356173	0.262847	5.8763E-11
C27	0	2.10205E-13	0.288591	0.212974	1.22534E-11
C28	0	7.40453E-14	0.217357	0.160404	4.40757E-12
C29	0	2.82076E-14	0.195438	0.144229	1.73953E-12
C30	0	2.22337E-13	4.78185	3.5289	1.4503E-11
H2O	99.9998	0.18438	0.0123866	0.252373	0.951018

* User Specified Values
? Extrapolated or Approximate Values

Copyright © 2002-2012 BRE Group, Ltd.

Process Streams Report
All Streams
Tabulated by Total Phase

Client Name:		Job: Compressor Release
Location:	STATE OF WV DNR B	
Flowsheet:	Proposed	

Stream Composition

Mole Fraction	Produced Water %	Sales Gas %	Sales Oil %	Tank Oil %	Tank Vapors %
Oxygen	0	0	0	0	0

Molar Flow	Produced Water lbmol/h	Sales Gas lbmol/h	Sales Oil lbmol/h	Tank Oil lbmol/h	Tank Vapors lbmol/h
H2S	0	0	0	0	0
N2	5.35957E-10	0.314166	3.25386E-06	0.000631966	0.000628812
CO2	1.95742E-06	0.112601	0.000117088	0.00244665	0.00233898
C1	8.1275E-07	40.4386	0.00366851	0.247213	0.243618
C2	1.04955E-06	9.96683	0.0285868	0.368255	0.339753
C3	8.51464E-07	4.18125	0.125652	0.561598	0.436014
iC4	1.24612E-08	0.363952	0.0519756	0.125085	0.0731117
nC4	2.09495E-07	1.11898	0.272886	0.548447	0.275582
2,2-Dimethylbutane	1.64856E-11	0.00152713	0.00350827	0.00418538	0.000677109
iC5	1.40947E-08	0.158515	0.142067	0.199522	0.057457
nC5	2.48551E-08	0.252216	0.323999	0.424199	0.100204
2,2-Dimethylpropane	3.70468E-10	0.0104639	0.00412254	0.00710559	0.00298313
Cyclopentane	1.94218E-09	0.000671275	0.0012347	0.00152461	0.00028996
2,3-Dimethylbutane	2.99419E-11	0.000583131	0.00188711	0.00216179	0.000274687
2-Methylpentane	7.78446E-10	0.0314959	0.11565	0.130868	0.015218
3-Methylpentane	2.61943E-09	0.0154994	0.0636723	0.0712881	0.00761605
C6	7.95017E-10	0.0505635	0.265588	0.291334	0.025747
Methylcyclopentane	8.56818E-09	0.00721886	0.0379189	0.0415945	0.003676
Benzene	1.37736E-06	0.000932931	0.00468196	0.00515098	0.000470172
Cyclohexane	2.62433E-08	0.00731367	0.0484297	0.0522004	0.00377137
2-Methylhexane	8.70116E-11	0.00643712	0.084448	0.0880642	0.00361622
3-Methylhexane	8.57992E-11	0.0057343	0.0782527	0.0814677	0.00321499
2,2,4-Trimethylpentane	0	0	0	0	0
C7	1.92766E-10	0.0156162	0.268645	0.27742	0.00877451
Methylcyclohexane	4.03708E-09	0.00650702	0.106641	0.110312	0.00367084
Toluene	1.29579E-06	0.00108516	0.0212889	0.0219083	0.00062076
C8	6.51609E-11	0.0076751	0.432363	0.437012	0.00464909
Ethylbenzene	3.11441E-07	0.000323037	0.0193252	0.0195225	0.000197641
m-Xylene	3.82184E-07	0.000357646	0.0256422	0.0258642	0.000222402
o-Xylene	1.84556E-07	0.000107974	0.00855006	0.00861738	6.74727E-05
C9	3.64039E-11	0.00174146	0.315116	0.316257	0.00114121
C10	3.68982E-12	0.000500784	0.275241	0.275579	0.000337407
C11	1.31282E-12	0.000118647	0.223056	0.223142	8.52902E-05
C12	3.62826E-14	3.56767E-05	0.175458	0.175485	2.66277E-05
C13	2.05098E-13	8.49716E-06	0.146643	0.14665	6.72765E-06
C14	1.15902E-13	1.98584E-06	0.123628	0.12363	1.66911E-06
C15	2.17121E-15	6.54898E-07	0.10412	0.10412	5.63611E-07
C16	3.61421E-17	1.86615E-07	0.0822225	0.0822226	1.6547E-07
C17	2.40264E-20	5.74611E-08	0.0651069	0.065107	5.16343E-08
C18	7.2488E-20	1.77256E-08	0.060912	0.060912	1.7642E-08
C19	0	5.34755E-09	0.0535287	0.0535287	5.58381E-09
C20	0	1.23822E-09	0.0436284	0.0436284	1.38545E-09
C21	0	3.20169E-10	0.0310433	0.0310433	3.73766E-10
C22	0	1.28316E-10	0.0307916	0.0307916	1.54631E-10
C23	0	2.52474E-11	0.0225693	0.0225693	3.26975E-11
C24	0	5.93417E-12	0.0166963	0.0166963	8.12962E-12
C25	0	1.8218E-12	0.0140953	0.0140953	2.61689E-12
C26	0	6.28991E-13	0.0163607	0.0163607	9.58766E-13
C27	0	1.20206E-13	0.0132563	0.0132563	1.99925E-13
C28	0	4.23428E-14	0.0099842	0.0099842	7.19131E-14
C29	0	1.61306E-14	0.00897739	0.00897739	2.83819E-14
C30	0	1.27143E-13	0.219652	0.219652	2.36628E-13
H2O	3.92784	0.105438	0.000568974	0.0157087	0.0155166

* User Specified Values
? Extrapolated or Approximate Values

Copyright © 2002-2012 BRE Group, Ltd.

Process Streams Report
All Streams
Tabulated by Total Phase

Client Name:		Job: Compressor Release
Location:	STATE OF WV DNR B	
Flowsheet:	Proposed	

Molar Flow	Produced Water lbmol/h	Sales Gas lbmol/h	Sales Oil lbmol/h	Tank Oil lbmol/h	Tank Vapors lbmol/h
Oxygen	0	0	0	0	0

Mass Fraction	Produced Water %	Sales Gas %	Sales Oil %	Tank Oil %	Tank Vapors %
H2S	0	0	0	0	0
N2	2.12177E-08	0.687688	1.38262E-05	0.00241657	0.0240191
CO2	0.000121739	0.387217	0.000781625	0.014698	0.14036
C1	1.84259E-05	50.6913	0.0089269	0.541355	5.32906
C2	4.45987E-05	23.4176	0.130384	1.5115	13.93
C3	5.30595E-05	14.4068	0.840435	3.38035	26.2159
iC4	1.02354E-06	1.65292	0.458228	0.9924	5.79427
nC4	1.72074E-05	5.08196	2.40582	4.35129	21.8405
2,2-Dimethylbutane	2.00766E-09	0.0102832	0.0458581	0.0492332	0.079563
iC5	1.4371E-06	0.893648	1.55476	1.96499	5.65252
nC5	2.53423E-06	1.42189	3.54578	4.17772	9.85784
2,2-Dimethylpropane	3.77729E-08	0.0589912	0.0451163	0.0699793	0.293475
Cyclopentane	1.92492E-07	0.00367865	0.0131348	0.0145956	0.0277287
2,3-Dimethylbutane	3.64639E-09	0.00392659	0.0246672	0.0254294	0.0322769
2-Methylpentane	9.48011E-08	0.212082	1.51171	1.53942	1.78817
3-Methylpentane	3.19001E-07	0.104367	0.832288	0.838573	0.894916
C6	9.68191E-08	0.340476	3.47161	3.42701	3.02537
Methylcyclopentane	1.01905E-06	0.0474721	0.484059	0.477837	0.421841
Benzene	0.000152043	0.0056942	0.0554734	0.0549222	0.0500776
Cyclohexane	3.12121E-06	0.0480955	0.618236	0.599677	0.432785
2-Methylhexane	1.23213E-08	0.0504004	1.28353	1.20453	0.494084
3-Methylhexane	1.21496E-08	0.0448975	1.18937	1.1143	0.439264
2,2,4-Trimethylpentane	0	0	0	0	0
C7	2.72966E-08	0.122269	4.08315	3.79449	1.19886
Methylcyclohexane	5.60169E-07	0.0499227	1.58823	1.47847	0.491456
Toluene	0.000168724	0.00781268	0.297532	0.275544	0.0779892
C8	1.05187E-08	0.0685054	7.4914	6.8141	0.724123
Ethylbenzene	4.6726E-05	0.00267978	0.311204	0.282915	0.0286106
m-Xylene	5.73396E-05	0.00296689	0.41293	0.374818	0.0321951
o-Xylene	2.76893E-05	0.000895705	0.137686	0.124881	0.00976741
C9	6.59818E-09	0.0174524	6.13035	5.53676	0.199576
C10	7.41918E-10	0.00556757	5.94022	5.35223	0.0654595
C11	2.89995E-10	0.00144912	5.28854	4.76105	0.0181782
C12	8.7338E-12	0.000474848	4.53333	4.08022	0.00618453
C13	5.3436E-11	0.000122408	4.10084	3.69057	0.00169123
C14	3.24942E-11	3.0784E-05	3.72025	3.34795	0.000451512
C15	6.5176E-13	1.08699E-05	3.35473	3.01898	0.000163243
C16	1.15657E-14	3.30192E-06	2.82414	2.54148	5.10909E-05
C17	8.16482E-18	1.07968E-06	2.37478	2.1371	1.69303E-05
C18	2.60703E-17	3.52489E-07	2.35137	2.11603	6.12205E-06
C19	0	1.12202E-07	2.18024	1.96203	2.04446E-06
C20	0	2.73374E-08	1.86983	1.68268	5.33766E-07
C21	0	7.41957E-09	1.3965	1.25673	1.51148E-07
C22	0	3.11422E-09	1.45069	1.3055	6.5489E-08
C23	0	6.40424E-10	1.11133	1.0001	1.44733E-08
C24	0	1.5703E-10	0.85766	0.77182	3.75401E-09
C25	0	5.02053E-11	0.754044	0.678575	1.25845E-09
C26	0	1.80231E-11	0.910039	0.818956	4.79404E-10
C27	0	3.57613E-12	0.765569	0.688946	1.0379E-10
C28	0	1.30611E-12	0.597842	0.538006	3.87089E-11
C29	0	5.15243E-13	0.556656	0.500942	1.582E-11
C30	0	4.20057E-12	14.0872	12.6773	1.36422E-10
H2O	99.9993	0.148424	0.0015548	0.0386298	0.381161
Oxygen	0	0	0	0	0

* User Specified Values
? Extrapolated or Approximate Values

Copyright © 2002-2012 BRE Group, Ltd.

Process Streams Report
All Streams
Tabulated by Total Phase

Client Name:		Job: Compressor Release
Location:	STATE OF WV DNR B	
Flowsheet:	Proposed	

Mass Flow	Produced Water lb/h	Sales Gas lb/h	Sales Oil lb/h	Tank Oil lb/h	Tank Vapors lb/h
H2S	0	0	0	0	0
N2	1.5014E-08	8.80086	9.11516E-05	0.0177035	0.0176152
CO2	8.61449E-05	4.95551	0.00515298	0.107676	0.102937
C1	1.30385E-05	648.735	0.0588519	3.9659	3.90824
C2	3.15588E-05	299.693	0.859578	11.0731	10.216
C3	3.75458E-05	184.375	5.5407	24.764	19.2263
iC4	7.24273E-07	21.1537	3.02094	7.27019	4.24942
nC4	1.21763E-05	65.0377	15.8607	31.877	16.0174
2,2-Dimethylbutane	1.42066E-09	0.131601	0.302327	0.360676	0.0583501
iC5	1.01692E-06	11.4367	10.25	14.3953	4.14545
nC5	1.79326E-06	18.197	23.3761	30.6054	7.22956
2,2-Dimethylpropane	2.67288E-08	0.754955	0.297436	0.51266	0.215229
Cyclopentane	1.36211E-07	0.0470785	0.0865932	0.106925	0.0203358
2,3-Dimethylbutane	2.58025E-09	0.0502515	0.162622	0.186293	0.0236713
2-Methylpentane	6.70829E-08	2.71417	9.96618	11.2776	1.31141
3-Methylpentane	2.25731E-07	1.33566	5.48699	6.14328	0.656315
C6	6.85109E-08	4.35733	22.8871	25.1059	2.21875
Methylcyclopentane	7.21094E-07	0.607536	3.19123	3.50057	0.30937
Benzene	0.000107588	0.0728729	0.365717	0.402353	0.036726
Cyclohexane	2.20862E-06	0.615515	4.07582	4.39316	0.317396
2-Methylhexane	8.71873E-09	0.645012	8.46186	8.82421	0.362353
3-Methylhexane	8.59724E-09	0.574588	7.84108	8.16322	0.322149
2,2,4-Trimethylpentane	0	0	0	0	0
C7	1.93156E-08	1.56477	26.9188	27.798	0.879223
Methylcyclohexane	3.96385E-07	0.638899	10.4707	10.8311	0.360425
Toluene	0.000119392	0.0999848	1.96152	2.0186	0.0571959
C8	7.44323E-09	0.876715	49.3882	49.9192	0.531059
Ethylbenzene	3.30641E-05	0.0342952	2.05166	2.0726	0.0209825
m-Xylene	4.05745E-05	0.0379695	2.72231	2.74587	0.0236113
o-Xylene	1.95934E-05	0.011463	0.907717	0.914864	0.00716324
C9	4.66898E-09	0.223352	40.4152	40.5616	0.146366
C10	5.24994E-10	0.0712525	39.1618	39.2098	0.0480068
C11	2.05205E-10	0.0185455	34.8655	34.8789	0.0133316
C12	6.18019E-12	0.00607698	29.8867	29.8912	0.00453562
C13	3.78122E-11	0.00156655	27.0354	27.0366	0.00124032
C14	2.29935E-11	0.000393967	24.5263	24.5266	0.000331131
C15	4.61197E-13	0.00013911	22.1165	22.1167	0.000119719
C16	8.18407E-15	4.22572E-05	18.6186	18.6186	3.74692E-05
C17	5.77756E-18	1.38175E-05	15.6561	15.6561	1.24164E-05
C18	1.84478E-17	4.51107E-06	15.5018	15.5018	4.4898E-06
C19	0	1.43593E-06	14.3736	14.3736	1.49937E-06
C20	0	3.49857E-07	12.3271	12.3271	3.91454E-07
C21	0	9.49539E-08	9.20664	9.20664	1.10849E-07
C22	0	3.9855E-08	9.56389	9.56389	4.80284E-08
C23	0	8.19599E-09	7.32662	7.32662	1.06145E-08
C24	0	2.00963E-09	5.65425	5.65425	2.75313E-09
C25	0	6.42515E-10	4.97115	4.97115	9.22927E-10
C26	0	2.30655E-10	5.99957	5.99957	3.51586E-10
C27	0	4.57664E-11	5.04713	5.04713	7.61181E-11
C28	0	1.67153E-11	3.94136	3.94136	2.83884E-11
C29	0	6.59396E-12	3.66984	3.66984	1.16021E-11
C30	0	5.37579E-11	92.872	92.872	1.00049E-10
H2O	70.7612	1.89949	0.0102502	0.282997	0.279536
Oxygen	0	0	0	0	0

Stream Properties

Property	Units	Produced Water	Sales Gas	Sales Oil	Tank Oil	Tank Vapors
Temperature	°F	90	60 *	90	90.0004	87.5664

* User Specified Values
? Extrapolated or Approximate Values

Copyright © 2002-2012 BRE Group, Ltd.

Licensed to Southwestern Energy Company

Process Streams Report
All Streams
Tabulated by Total Phase

Client Name:		Job: Compressor Release
Location:	STATE OF WV DNR B	
Flowsheet:	Proposed	

Stream Properties

Property	Units	Produced Water	Sales Gas	Sales Oil	Tank Oil	Tank Vapors
Pressure	psig	-13.4976	130	0.5	30	-13.4976
Mole Fraction Vapor	%	0	100	0	12.7146	100
Mole Fraction Light Liquid	%	100	0	100	87.2854	0
Mole Fraction Heavy Liquid	%	0	0	0	0	0
Molecular Weight	lb/lbmol	18.0154	22.3795	143.522	117.696	44.9492
Mass Density	lb/ft^3	62.066	0.608981	45.2414	6.25586	0.00918352
Molar Flow	lbmol/h	3.92785	57.1851	4.59346	6.2244	1.63158
Mass Flow	lb/h	70.7617	1279.78	659.265	732.587	73.3382
Vapor Volumetric Flow	ft^3/h	1.1401	2101.5	14.5722	117.104	7985.85
Liquid Volumetric Flow	gpm	0.142143	262.006	1.81679	14.6	995.638
Std Vapor Volumetric Flow	MMSCFD	0.0357734	0.520821	0.0418355	0.0566895	0.0148598
Std Liquid Volumetric Flow	sgpm	0.141458	7.20819	1.79284	2.08201	0.289225
Compressibility		5.89645E-05	0.953481	0.00817233	0.142553	0.998714
Specific Gravity		0.995142	0.772705	0.725382		1.55197
API Gravity		10.0135		59.9945		
Enthalpy	Btu/h	-481803	-2.01408E+06	-582177	-666021	-76928
Mass Enthalpy	Btu/lb	-6808.81	-1573.77	-883.07	-909.135	-1048.95
Mass Cp	Btu/(lb*°F)	0.982128	0.481952 ?	0.502352	0.503645	0.413477
Ideal Gas CpCv Ratio		1.32488	1.23832	1.03618	1.04426	1.11971
Dynamic Viscosity	cP	0.782693	0.0103058	0.79709		0.00848693
Kinematic Viscosity	cSt	0.787257	1.05647	1.09989		57.6927
Thermal Conductivity	Btu/(h*ft*°F)	0.355978	0.0164765 ?	0.0761311 ?		0.0113145
Surface Tension	lbf/ft	0.00489078		0.00147128 ?		
Net Ideal Gas Heating Value	Btu/ft^3	0.0051574	1212.89	7236.96	5953.89	2339.55
Net Liquid Heating Value	Btu/lb	-1059.64	20489.8	18971.4	19034	19594.6
Gross Ideal Gas Heating Value	Btu/ft^3	50.3153	1334.86	7789.64	6414.91	2542.37
Gross Liquid Heating Value	Btu/lb	0.113869	22557.9	20432	20519.8	21306.6

Remarks

* User Specified Values
? Extrapolated or Approximate Values

ProMax 3.2.13330.0
Copyright © 2002-2012 BRE Group, Ltd.

Licensed to Southwestern Energy Company

TANKS 4.0.9d
Emissions Report - Summary Format
Tank Indentification and Physical Characteristics

Identification		
User Identification:	State of WV DNR B Condensate	
City:	Brooke County	
State:	West Virginia	
Company:	SWN Production Company, LLC	
Type of Tank:	Vertical Fixed Roof Tank	
Description:	Three (3) 400-bbl condensate tanks modeled as Gasoline RVP 15.	
Tank Dimensions		
Shell Height (ft):		20.00
Diameter (ft):		12.00
Liquid Height (ft) :		19.00
Avg. Liquid Height (ft):		10.00
Volume (gallons):		16,074.56
Turnovers:		59.13
Net Throughput(gal/yr):		942,795.00
Is Tank Heated (y/n):	N	
Paint Characteristics		
Shell Color/Shade:	White/White	
Shell Condition	Good	
Roof Color/Shade:	White/White	
Roof Condition:	Good	
Roof Characteristics		
Type:	Cone	
Height (ft)		0.00
Slope (ft/ft) (Cone Roof)		0.06
Breather Vent Settings		
Vacuum Settings (psig):		-0.03
Pressure Settings (psig)		0.03

Meterological Data used in Emissions Calculations: Pittsburgh, Pennsylvania (Avg Atmospheric Pressure = 14.11 psia)

TANKS 4.0.9d
Emissions Report - Summary Format
Liquid Contents of Storage Tank

State of WV DNR B Condensate - Vertical Fixed Roof Tank
Brooke County, West Virginia

Mixture/Component	Month	Daily Liquid Surf. Temperature (deg F) Avg.	Min.	Max.	Liquid Bulk Temp (deg F)	Vapor Pressure (psia) Avg.	Min.	Max.	Vapor Mol. Weight.	Liquid Mass Fract.	Vapor Mass Fract.	Mol. Weight	Basis for Vapor Pressure Calculations
Gasoline (RVP 15.0)	All	51.94	47.06	56.81	50.33	7.0149	6.3924	7.6845	60.0000			92.00	Option 4: RVP=15, ASTM Slope=3

TANKS 4.0.9d
Emissions Report - Summary Format
Individual Tank Emission Totals

Emissions Report for: Annual

State of WV DNR B Condensate - Vertical Fixed Roof Tank
Brooke County, West Virginia

	Losses(lbs)		
Components	Working Loss	Breathing Loss	Total Emissions
Gasoline (RVP 15.0)	6,368.34	1,424.69	7,793.03

TANKS 4.0.9d
Emissions Report - Summary Format
Tank Indentification and Physical Characteristics

Identification

User Identification:	State of WV DNR B Produced Water as Condensate
City:	Brooke County
State:	West Virginia
Company:	SWN Production Company, LLC
Type of Tank:	Vertical Fixed Roof Tank
Description:	Three (3) 400-bbl produced water tanks modeled as Gasoline RVP 15.

Tank Dimensions

Shell Height (ft):		20.00
Diameter (ft):		12.00
Liquid Height (ft) :		19.00
Avg. Liquid Height (ft):		10.00
Volume (gallons):		16,074.56
Turnovers:		4.77
Net Throughput(gal/yr):		76,650.00
Is Tank Heated (y/n):	N	

Paint Characteristics

Shell Color/Shade:	White/White
Shell Condition	Good
Roof Color/Shade:	White/White
Roof Condition:	Good

Roof Characteristics

Type:	Cone	
Height (ft)		0.00
Slope (ft/ft) (Cone Roof)		0.06

Breather Vent Settings

Vacuum Settings (psig):	-0.03
Pressure Settings (psig)	0.03

Meterological Data used in Emissions Calculations: Pittsburgh, Pennsylvania (Avg Atmospheric Pressure = 14.11 psia)

TANKS 4.0.9d
Emissions Report - Summary Format
Liquid Contents of Storage Tank

State of WV DNR B Produced Water as Condensate - Vertical Fixed Roof Tank
Brooke County, West Virginia

Mixture/Component	Month	Daily Liquid Surf. Temperature (deg F) Avg.	Min.	Max.	Liquid Bulk Temp (deg F)	Vapor Pressure (psia) Avg.	Min.	Max.	Vapor Mol. Weight.	Liquid Mass Fract.	Vapor Mass Fract.	Mol. Weight	Basis for Vapor Pressure Calculations
Gasoline (RVP 15.0)	All	51.94	47.06	56.81	50.33	7.0149	6.3924	7.6845	60.0000			92.00	Option 4: RVP=15, ASTM Slope=3

TANKS 4.0.9d
Emissions Report - Summary Format
Individual Tank Emission Totals

Emissions Report for: Annual

State of WV DNR B Produced Water as Condensate - Vertical Fixed Roof Tank
Brooke County, West Virginia

	Losses(lbs)		
Components	Working Loss	Breathing Loss	Total Emissions
Gasoline (RVP 15.0)	768.13	1,424.69	2,192.83