JAY-BEE OIL & GAS, INC.

APPLICATION FOR GENERAL PERMIT MODIFICATION

Bashful Well Pad Production Facility
Tyler County, West Virginia

TECHNOLOGIES

98 Vanadium Road
Bridgeville, PA 15017
(412) 221-1100

APPLICATION FOR G70-A GENERAL PERMIT MODIFICATION

Jay-Bee Oil & Gas, Inc.

Bashful Well Pad Production Facility

Tyler County, West Virginia

Table of Contents

SECTION I

Application Form

WEST VIRGINIA
DEPARTMENT OF ENVIRONMENTAL PROTECTION
DIVISION OF AIR QUALITY
601 57th Street, SE
Charleston, WV 25304
Phone: (304) 926-0475 • *www.dep.wv.gov/daq*

APPLICATION FOR GENERAL PERMIT REGISTRATION

CONSTRUCT, MODIFY, RELOCATE OR ADMINISTRATIVELY UPDATE
A STATIONARY SOURCE OF AIR POLLUTANTS

☐ CONSTRUCTION ☒ MODIFICATION ☐ RELOCATION ☐ CLASS I ADMINISTRATIVE UPDATE
☐ CLASS II ADMINISTRATIVE UPDATE

CHECK WHICH TYPE OF GENERAL PERMIT REGISTRATION YOU ARE APPLYING FOR:

- ☐ **G10-D –** Coal Preparation and Handling
- ☐ **G20-B –** Hot Mix Asphalt
- ☐ **G30-D –** Natural Gas Compressor Stations
- ☐ **G33-A –** Spark Ignition Internal Combustion Engines
- ☐ **G35-A –** Natural Gas Compressor Stations (Flare/Glycol Dehydration Unit)
- ☐ **G40-C –** Nonmetallic Minerals Processing
- ☐ **G50-B –** Concrete Batch
- ☐ **G60-C** - Class II Emergency Generator
- ☐ **G65-C –** Class I Emergency Generator
- ☒ **G70-A –** Class II Oil and Natural Gas Production Facility

SECTION I. GENERAL INFORMATION

1. Name of applicant (as registered with the WV Secretary of State's Office):

Jay-Bee Oil & Gas, Inc.

2. Federal Employer ID No. **(FEIN):**

55-073-8862

3. Applicant's mailing address:

3570 Shields Hill Rd
Cairo, WV 26337

4. Applicant's physical address:

3570 Shields Hill Rd
Cairo, WV 26337

5. If Applicant is a subsidiary corporation, please provide the name of parent corporation.

N/A

WV BUSINESS REGISTRATION. Is the applicant a resident of the State of West Virginia? ☒ **YES** ☐ **NO**

- IF **YES,** provide a copy of the Certificate of **Incorporation/ Organization / Limited Partnership** (one page) including any name change amendments or other Business Registration Certificate as **Attachment A**.

- IF **NO,** provide a copy of the **Certificate of Authority / Authority of LLC / Registration** (one page) including any name change amendments or other Business Certificate as **Attachment A**.

SECTION II. FACILITY INFORMATION

7. Type of plant or facility (stationary source) to be constructed, modified, relocated or administratively updated (e.g., coal preparation plant, primary crusher, etc.):

Natural Gas Well Pad Production Facility

8a. Standard Industrial Classification AND 8b. North American Industry

Classification (SIC) code: **1311** System (NAICS) code: **211111**

9. DAQ Plant ID No. (for existing facilities only):

095-00051

10. List all current 45CSR13 and other General Permit numbers associated with this process (for existing facilities only):

G70-A095

A: PRIMARY OPERATING SITE INFORMATION

11A. Facility name of primary operating site:	12A. Address of primary operating site:
Bashful Well Pad Production Facility	Mailing: **None** Physical:

13A. Does the applicant own, lease, have an option to buy, or otherwise have control of the proposed site? ☒ **YES** ☐ **NO**

→ IF **YES**, please explain: **Applicant has a lease agreement with the land owner for installation of** the Well Pad and associated equipment

→ IF **NO**, YOU ARE NOT ELIGIBLE FOR A PERMIT FOR THIS SOURCE.

14A → For **Modifications or Administrative Updates** at an existing facility, please provide directions to the present location of the facility from the nearest state road;

→ For Construction or Relocation permits, please provide directions to the proposed new site location from the nearest state road. Include a **MAP** as **Attachment F**.

From SR-18 north of Alma, take CR Rt. 1/3 east for 6 miles. Proceed left onto CR 13/1 for 2 miles. Take right onto Bonelick Rd. Proceed. approximately 0.6 miles. Access road is on the left.

15A. Nearest city or town:	16A. County:	17A. UTM Coordinates:
Stringtown	**Tyler**	Northing (KM): **4369.319** Easting (KM): **523.994** Zone: **17**
18A. Briefly describe the proposed new operation or change (s) to the facility: **Natural gas production and separation of liquids.**		19A. Latitude & Longitude Coordinates (NAD83, Decimal Degrees to 5 digits): Latitude: **39.47313** Longitude: **-80.72104**

B: 1ST ALTERNATE OPERATING SITE INFORMATION (only available for G20, G40, & G50 General Permits)

11B. Name of 1st alternate operating site:	12B. Address of 1st alternate operating site:
	Mailing: Physical:

13B. Does the applicant own, lease, have an option to buy, or otherwise have control of the proposed site? ☐ **YES** ☐ **NO**

→ IF **YES**, please explain:

→ IF **NO**, YOU ARE NOT ELIGIBLE FOR A PERMIT FOR THIS SOURCE.

14B. → For **Modifications or Administrative Updates** at an existing facility, please provide directions to the present location of the facility from the nearest state road;

→ For Construction or Relocation permits, please provide directions to the proposed new site location from the nearest state road. Include a **MAP** as **Attachment F**.

_____

_____

_____

15B. Nearest city or town:	16B. County:	17B. UTM Coordinates: Northing (KM): _____ Easting (KM): _____ Zone: _____
18B. Briefly describe the proposed new operation or change (s) to the facility:		19B. Latitude & Longitude Coordinates (NAD83, Decimal Degrees to 5 digits): Latitude: _____ Longitude: _____

C: 2ND ALTERNATE OPERATING SITE INFORMATION (only available for G20, G40, & G50 General Permits):

11C. Name of 2nd alternate operating site: _____ _____	12C. Address of 2nd alternate operating site: Mailing:_____ Physical:_____ _____

13C. Does the applicant own, lease, have an option to buy, or otherwise have control of the proposed site? ☐ **YES** ☐ **NO**

→ IF **YES**, please explain: _____

_____

→ IF **NO**, YOU ARE NOT ELIGIBLE FOR A PERMIT FOR THIS SOURCE.

14C. → For **Modifications or Administrative Updates** at an existing facility, please provide directions to the present location of the facility from the nearest state road;

→ For Construction or Relocation permits, please provide directions to the proposed new site location from the nearest state road. Include a **MAP** as **Attachment F**.

_____

_____

_____

15C. Nearest city or town:	16C. County:	17C. UTM Coordinates: Northing (KM): _____ Easting (KM): _____ Zone: _____
18C. Briefly describe the proposed new operation or change (s) to the facility:		19C. Latitude & Longitude Coordinates (NAD83, Decimal Degrees to 5 digits): Latitude: _____ Longitude: _____

20. Provide the date of anticipated installation or change:	21. Date of anticipated Start-up if registration is granted:
02 / 08 /16 If this is an **After-The-Fact** permit application, provide the date upon which the proposed change did happen: : ____/____/____	02**/ 12/ 16**

22. Provide maximum projected **Operating Schedule** of activity/activities outlined in this application if other than 8760 hours/year. (Note: anything other than 24/7/52 may result in a restriction to the facility's operation).

Hours per day **24** Days per week **7** Weeks per year **52** Percentage of operation **100**

SECTION III. ATTACHMENTS AND SUPPORTING DOCUMENTS

23. Include a check payable to WVDEP – Division of Air Quality with the appropriate **application fee** (per 45CSR22 and 45CSR13).

24. Include a **Table of Contents** as the first page of your application package.

All of the required forms and additional information can be found under the Permitting Section (General Permits) of DAQ's website, or requested by phone.

25. Please check all attachments included with this permit application. Please refer to the appropriate reference document for an explanation of the attachments listed below.

- ☒ ATTACHMENT A : CURRENT BUSINESS CERTIFICATE
- ☒ ATTACHMENT B: PROCESS DESCRIPTION
- ☒ ATTACHMENT C: DESCRIPTION OF FUGITIVE EMISSIONS
- ☒ ATTACHMENT D: PROCESS FLOW DIAGRAM
- ☒ ATTACHMENT E: PLOT PLAN
- ☒ ATTACHMENT F: AREA MAP
- ☒ ATTACHMENT G: EQUIPMENT DATA SHEETS AND REGISTRATION SECTION APPLICABILITY FORM
- ☒ ATTACHMENT H: AIR POLLUTION CONTROL DEVICE SHEETS
- ☒ ATTACHMENT I: EMISSIONS CALCULATIONS
- ☒ ATTACHMENT J: CLASS I LEGAL ADVERTISEMENT
- ☒ ATTACHMENT K: ELECTRONIC SUBMITTAL
- ☒ ATTACHMENT L: GENERAL PERMIT REGISTRATION APPLICATION FEE
- ☐ ATTACHMENT M: SITING CRITERIA WAIVER
- ☐ ATTACHMENT N: MATERIAL SAFETY DATA SHEETS (MSDS)
- ☒ ATTACHMENT O: EMISSIONS SUMMARY SHEETS
- ☒ OTHER SUPPORTING DOCUMENTATION NOT DESCRIBED ABOVE (Equipment Drawings, Aggregation Discussion, etc.)

Please mail an original and two copies of the complete General Permit Registration Application with the signature(s) to the DAQ Permitting Section, at the address shown on the front page of this application. Please DO NOT fax permit applications. For questions regarding applications or West Virginia Air Pollution Rules and Regulations, please refer to the website shown on the front page of the application or call the phone number also provided on the front page of the application.

SECTION IV. CERTIFICATION OF INFORMATION

This General Permit Registration Application shall be signed below by a Responsible Official. A Responsible Official is a President, Vice President, Secretary, Treasurer, General Partner, General Manager, a member of a Board of Directors, or Owner, depending on business structure. A business may certify an Authorized Representative who shall have authority to bind the Corporation, Partnership, Limited Liability Company, Association, Joint Venture or Sole Proprietorship. Required records of daily throughput, hours of operation and maintenance, general correspondence, Emission Inventory, Certified Emission Statement, compliance certifications and all required notifications must be signed by a Responsible Official or an Authorized Representative. If a business wishes to certify an Authorized Representative, the official agreement below shall be checked off and the appropriate names and signatures entered. Any administratively incomplete or improperly signed or unsigned Registration Application will be returned to the applicant.

FOR A CORPORATION (domestic or foreign)

☒ I certify that I am a President, Vice President, Secretary, Treasurer or in charge of a principal business function of the corporation

FOR A PARTNERSHIP

☐ I certify that I am a General Partner

FOR A LIMITED LIABILITY COMPANY

☐ I certify that I am a General Partner or General Manager

FOR AN ASSOCIATION

☐ I certify that I am the President or a member of the Board of Directors

FOR A JOINT VENTURE

☐ I certify that I am the President, General Partner or General Manager

FOR A SOLE PROPRIETORSHIP

☐ I certify that I am the Owner and Proprietor

☐ *I hereby certify that* (please print or type) _____

is an Authorized Representative and in that capacity shall represent the interest of the business (e.g., Corporation, Partnership, Limited Liability Company, Association Joint Venture or Sole Proprietorship) and may obligate and legally bind the business. If the business changes its Authorized Representative, a Responsible Official shall notify the Director of the Office of Air Quality immediately, and/or,

I hereby certify that all information contained in this General Permit Registration Application and any supporting documents appended hereto is, to the best of my knowledge, true, accurate and complete, and that all reasonable efforts have been made to provide the most comprehensive information possible

Signature _____
(please use blue ink) Responsible Official Date

Name & Title **Shane Dowell, Office Manager**
(please print or type)

Signature _____
(please use blue ink) Authorized Representative (if applicable) Date

Applicant's Name _____

Phone & Fax **304/628-3119** **304/628-3119**
Phone Fax

Email **sdowell@jaybeeoil.com**

SECTION II

Attachments

ATTACHMENT A

Business Registration

Attachment A

Attached Current WV Business Certificate

WEST VIRGINIA
STATE TAX DEPARTMENT

BUSINESS REGISTRATION CERTIFICATE

ISSUED TO:
JAY-BEE OIL & GAS INC
RR 1 BOX 5
CAIRO, WV 26337-9701

BUSINESS REGISTRATION ACCOUNT NUMBER: **1043-4424**

This certificate is issued on: 06/11/2010

This certificate is issued by the West Virginia State Tax Commissioner in accordance with W.Va. Code s. 11-12.

The person or organization identified on this certificate is registered to conduct business in the State of West Virginia at the location above.

This certificate is not transferrable and must be displayed at the location for which issued.

This certificate shall be permanent until cessation of the business for which the certificate of registration was granted or until it is suspended, revoked, or cancelled by the Tax Commissioner.

Change in name or change of location shall be considered a cessation of the business and a new certificate shall be required.

TRAVELING/STREET VENDORS: Must carry a copy of this certificate in every vehicle operated by them.
CONTRACTORS, DRILLING OPERATORS, TIMBER/LOGGING OPERATIONS: Must have a copy of this certificate displayed at every job site within West Virginia.

ail.006 v.1
L1388180464

SCANNED

JUN 24 2010

ATTACHMENT B

Process Description

Jay-Bee Oil & Gas, Incorporated
Bashful Well Pad Production Facility
Attachment B
Process Description

Natural gas and Produced Fluids (condensate and water) are received from two wells at this location and passed through Gas Processing Units (one per well) to avoid ice formation during subsequent pressure drops. The GPU also separates the gas from the liquids and separates the liquids into Condensate and Produced Water. The gas is routed to a gathering pipeline owned and operated by others.

Both the Condensate and Produced Water are accumulated in four 210 BBL tanks (two for Condensate and two for Produced Water), pending truck transportation by others. The Condensate is transported to a regional processing facility and the Produced Water to a regional disposal facility. Flash, working and breathing losses from these tanks is currently routed to a Vapor Recovery Unit (VRU) with the captured vapors routed back to the raw gas discharge line. In accordance with the G70-A permit registration a maximum capture and control efficiency of only 95% is claimed for the VRU.

Jay-Bee is seeking approval for installation of an enclosed combustor as a back-up for the VRU to capture and destroy tank emissions for those times when the VRU is not available (e.g. engine and compressor maintenance). In association with this change, condensate and water production rates have changed subsequent to issuance if the initial permit registration. Accordingly, Jay-Bee is seeking to revise the permitted rates for production and associated tank emissions and truck loading emissions for these two liquids.

Separately, the original permit application, and subsequent permit, did not address fugitive dusts associated with truck traffic. This application seeks to correct this oversight.

Lastly, Jay-Bee is seeking approval for the installation and operation of a Thermo-Electric Generator.

No other changes are being requested at this time.

A Process Flow Diagram depicting the new and existing features is provided in Attachment D.

The proposed change to the tank emissions control methodology will actually control the tank emissions to a greater degree than the VRU, actually reduce overall VOC and HAPs emissions. However, the presence of a permanent combustor warrants the modification being through a Modification rather than a Class II Administrative Update. It is also our understanding that in order for both control devices to be addressed within the confines of the G70-A permit registration, the application must show the emissions for both control units as if they were the only control. Thus, for permitting purposes, the enclosed application shows 2% of the potential tank emissions as un-captured/uncontrolled emissions from the combustor in addition to the 5% of potential uncaptured/uncontrolled tank emissions from the current VRU.

Emission Units Table

(includes all emission units and air pollution control devices that will be part of this permit application review, regardless of permitting status)

Emission Unit ID[1]	Emission Point ID[2]	Emission Unit Description	Year Installed/ Modified	Design Capacity	Type[3] and Date of Change	Control Device[4]
GPU-1	1E	Gas Processing Unit	2014	1.5 MMBTU/Hr	EXIST	None
GPU-2	2E	Gas Processing Unit	2014	1.5 MMBTU/Hr	EXIST	None
VRU-1	3E	VRU Driver (Cummins G5.9)	2014	84 Hp	EXIST	1C
T01	4E	Produced Water Tank	2014	210 BBL	EXIST	VRU-1/ EC-1
T02	5E	Produced Water Tank	2014	210 BBL	EXIST	VRU-1/ EC-1
T03	6E	Condensate Tank	2014	210 BBL	EXIST	VRU-1/ EC-1
T04	7E	Condensate Tank	2014	210 BBL	EXIST	VRU-1/ EC-1
TEG-1	**8E**	**Thermoelectric Generator**	**Pending Permit**	**4.4 KW/Hr**	**NEW**	**None**
TL-1	9E	Condensate Truck Loading	2014	27,480 BBL./Yr.	**Modification**	None
TL-1	10E	Produced Water Loading	2014	25,200 BBL/Yr.	**Modification**	None
EC-1	**11E**	**Enclosed Combustor**	**Upon Receipt of Permit**	**10.0 MMBTU/Hr**	**NEW**	**N/A**
---	---	Fugitive VOC Emissions – Fittings and Connections	2014	N/A	**Modification**	None
---	---	Haul Roads	2014	2 Trucks per day max.	EXIST	None

[1] For Emission Units (or Sources) use the following numbering system:1S, 2S, 3S,... or other appropriate designation.
[2] For Emission Points use the following numbering system:1E, 2E, 3E, ... or other appropriate designation.
[3] New, modification, removal
[4] For Control Devices use the following numbering system: 1C, 2C, 3C,... or other appropriate designation.

ATTACHMENT C

Description of Fugitive Emissions

Jay-Bee Oil & Gas, Inc.
Bashful Well Pad Production Facility
Attachment C
Fugitive Emissions Data

Equipment Fugitive Emissions

As noted in the process description, Jay Bee plans to install an enclosed combustor at its Bashful Well Pad Production Facility. This equipment will contain a variety of piping containing natural gas and tank vapors. During the normal course of operation minor leaks from valves, pressure release devices and various fittings associated with this piping may occur. The number of valves, flanges, etc. has been revised to reflect the inclusion of additional equipment that will be installed with this modification. A new potential emission rate of 1.34 tpy of VOCs and 3 tpy CO_2e has been estimated.

Estimates of these emissions are included in the calculations (Attachment I) and summarized on the form included in this section. These calculations are based on emission factors accepted by the American Petroleum Institute and EPA.

Pigging Emission Estimates

There are no pigging operations in association with this facility.

Facility Blowdown Emission Estimates

The proposed modification will not result in any changes to the blowdown emissions at this facility. The numbers presented in the following Fugitive Emissions Summary Sheet for blowdowns has not changed from the original application.

Storage Tank and Haul Road Fugitive Emissions

Produced Fluids (water and condensate) received by this facility are accumulated in four 210-BBL tanks (two condensate and two water) prior to off-site shipment. In this modification application, emissions from these tanks were determined by using flash gas measurements from pressurized condensate produced at an area Jay-Bee well pad and working/breathing losses using AP-42 methods using condensate vapor data from this same condensate. Given changes in condensate production, uncontrolled emissions from these tanks are now determined to be a maximum of 767.2 tons per year of VOCs. These vapors are routed to a VRU with a minimum capture and control efficiency of 95%. Emission calculations are presented in Attachment I. Emissions associated with the proposed Enclosed Combustor are also presented in the calculations in Attachment I.

Emissions from Truck Loading Operations have been correspondingly revised to match the current maximum water and condensate production rates.

Fugitive dust emissions from truck traffic on the access road have been added to the fugitive emissions with this modification application.

FUGITIVE EMISSIONS DATA SUMMARY SHEET

The FUGITIVE EMISSIONS SUMMARY SHEET provides a summation of fugitive emissions. Fugitive emissions are those emissions which could not reasonably pass through a stack, chimney, vent or other functionally equivalent opening. Note that uncaptured process emissions are not typically considered to be fugitive, and must be accounted for on the appropriate EMISSIONS UNIT DATA SHEET and on the EMISSION POINTS DATA SUMMARY SHEET.

Please note that total emissions from the source are equal to all vented emissions, all fugitive emissions, plus all other emissions (e.g. uncaptured emissions).

APPLICATION FORMS CHECKLIST - FUGITIVE EMISSIONS
1.) Will there be haul road activities? ☒ Yes ☐ No ☒ If YES, then complete the HAUL ROAD EMISSIONS UNIT DATA SHEET.
2.) Will there be Storage Piles? ☐ Yes ☒ No ☐ If YES, complete Table 1 of the NONMETALLIC MINERALS PROCESSING EMISSIONS UNIT DATA SHEET.
3.) Will there be Liquid Loading/Unloading Operations? ☒ Yes ☐ No ☒ If YES, complete the BULK LIQUID TRANSFER OPERATIONS EMISSIONS UNIT DATA SHEET.
4.) Will there be emissions of air pollutants from Wastewater Treatment Evaporation? ☐ Yes ☒ No ☐ If YES, complete the GENERAL EMISSIONS UNIT DATA SHEET.
5.) Will there be Equipment Leaks (e.g. leaks from pumps, compressors, in-line process valves, pressure relief devices, open-ended valves, sampling connections, flanges, agitators, cooling towers, etc.)? ☒ Yes ☐ No ☒ If YES, complete the LEAK SOURCE DATA SHEET section of the CHEMICAL PROCESSES EMISSIONS UNIT DATA SHEET.
6.) Will there be General Clean-up VOC Operations? ☐ Yes ☒ No ☐ If YES, complete the GENERAL EMISSIONS UNIT DATA SHEET.
7.) Will there be any other activities that generate fugitive emissions? ☐ Yes ☒ No ☐ If YES, complete the GENERAL EMISSIONS UNIT DATA SHEET or the most appropriate form.
If you answered “NO” to all of the items above, it is not necessary to complete the following table, “Fugitive Emissions Summary.”

FUGITIVE EMISSIONS SUMMARY	All Regulated Pollutants - Chemical Name/CAS [1]	Maximum Potential Uncontrolled Emissions [2]		Maximum Potential Controlled Emissions [3]		Est. Method Used [4]
		lb/hr	ton/yr	lb/hr	ton/yr	
Haul Road/Road Dust Emissions Paved Haul Roads						
Unpaved Haul Roads	PM	6.32	0.68	6.32	0.68	EE
Loading/Unloading Operations **(Condensate Loading + Water Loading)**	VOCs	51.14	3.53	51.14	3.53	EE
	Total HAPs	2.51	0.17	2.51	0.17	EE
Equipment Leaks	VOCs	0.31	1.34	0.31	1.34	EE
	Total HAPs	0.01	0.04	0.01	0.04	EE
Blowdowns	VOCs	N/A	0.01	N/A	0.01	EE
	Total HAPs	N/A	<0.01	N/A	<0.01	EE
Other:						

[1] List all regulated air pollutants. Speciate VOCs, including all HAPs. Follow chemical name with Chemical Abstracts Service (CAS) number. LIST Acids, CO, CS_2, VOCs, H_2S, Inorganics, Lead, Organics, O_3, NO, NO_2, SO_2, SO_3, all applicable Greenhouse Gases (including CO_2 and methane), etc. DO NOT LIST H_2, H_2O, N_2, O_2, and Noble Gases.

[2] Give rate with no control equipment operating. If emissions occur for less than 1 hr, then record emissions per batch in minutes (e.g. 5 lb VOC/20 minute batch).

[3] Give rate with proposed control equipment operating. If emissions occur for less than 1 hr, then record emissions per batch in minutes (e.g. 5 lb VOC/20 minute batch).

[4] Indicate method used to determine emission rate as follows: MB = material balance; ST = stack test (give date of test); EE = engineering estimate; O = other (specify).

ATTACHMENT D

Process Flow Diagram

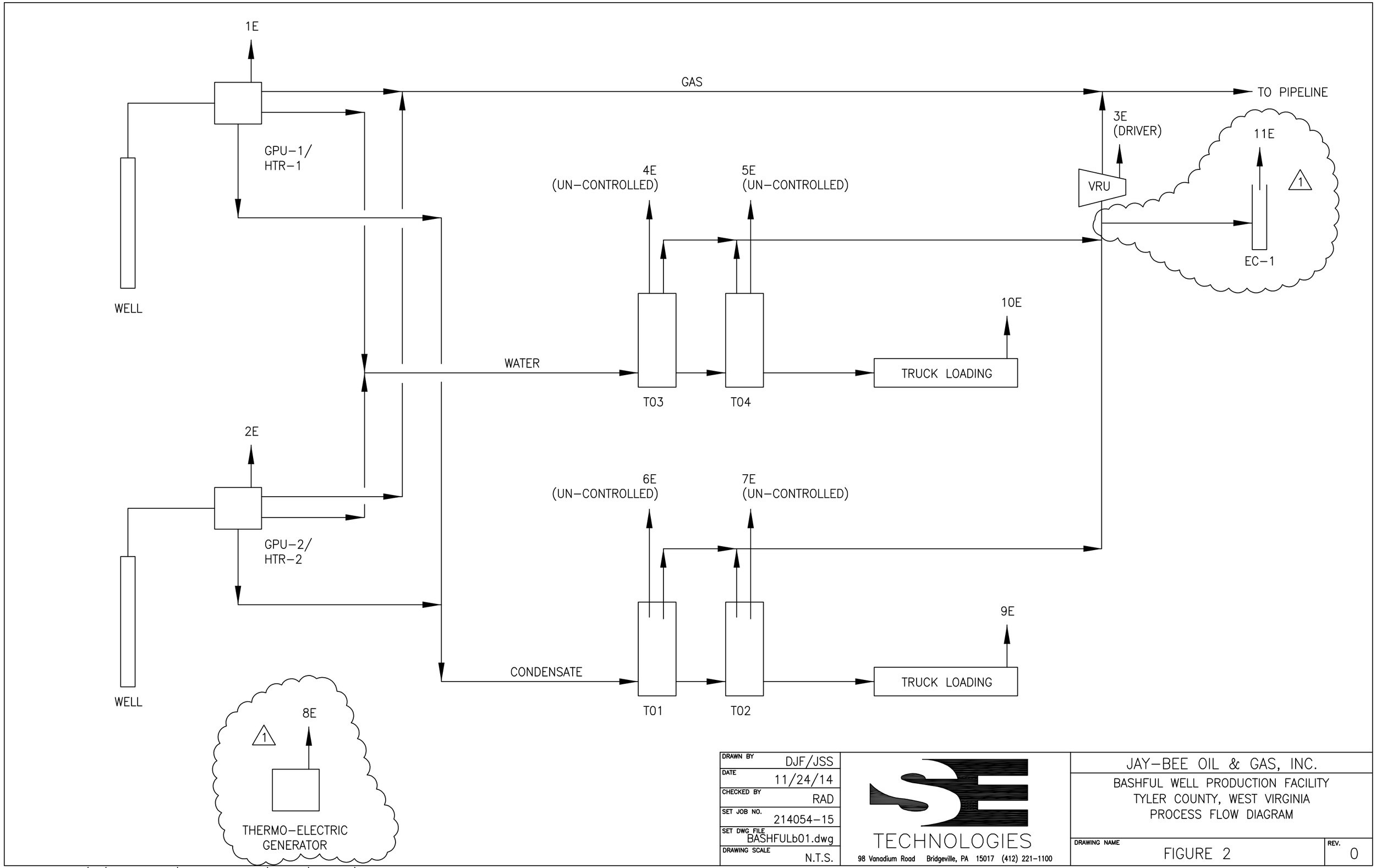

DRAWN BY	DJF/JSS
DATE	11/24/14
CHECKED BY	RAD
SET JOB NO.	214054-15
SET DWG FILE	BASHFULb01.dwg
DRAWING SCALE	N.T.S.

TECHNOLOGIES
98 Vanadium Road Bridgeville, PA 15017 (412) 221-1100

JAY-BEE OIL & GAS, INC.

BASHFUL WELL PRODUCTION FACILITY
TYLER COUNTY, WEST VIRGINIA
PROCESS FLOW DIAGRAM

DRAWING NAME: FIGURE 2

REV. 0

Plot: env045 11/24/2015 09:58 G:\JAY-BEE OIL&GAS\214054\BASHFUL\BASHFULb01.dwg

ATTACHMENT E

Plot Plan

ATTACHMENT F

Area Map

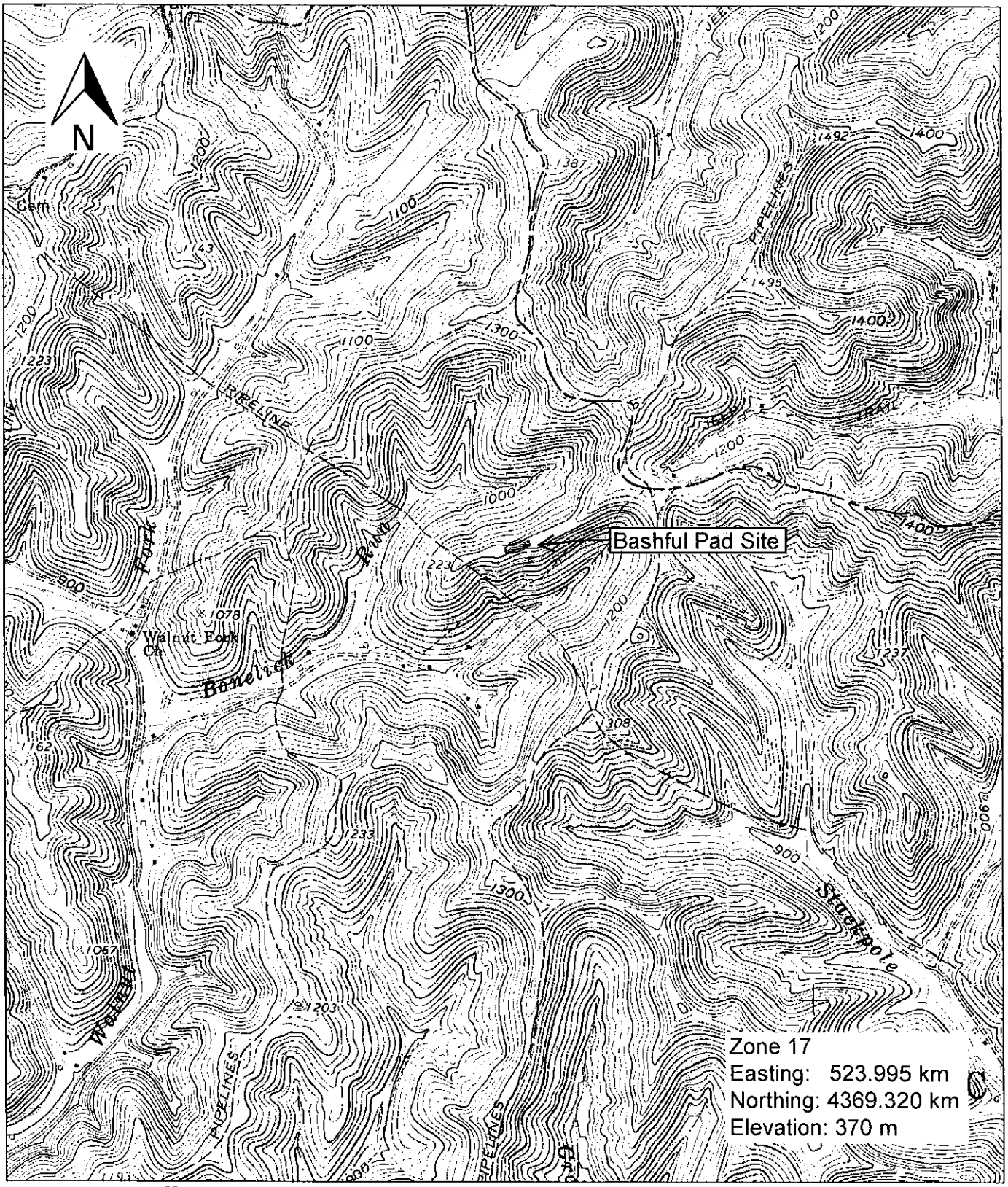

N

0 0.5 Mi

0 2000 Ft

Map provided by MyTopo.com

ATTACHMENT G

Equipment Data Sheets and Registration Section Applicability Form

General Permit G70-A Registration
Section Applicability Form

General Permit G70-A was developed to allow qualified applicants to seek registration for a variety of sources. These sources include natural gas well affected facilities, storage tanks, natural gas-fired compressor engines (RICE), natural gas producing units, natural gas-fired in-line heaters, pneumatic controllers, heater treaters, tank truck loading, glycol dehydration units, completion combustion devices, flares, enclosed combustion devices, and vapor recovery systems. All registered facilities will be subject to Sections 1.0, 2.0, 3.0, and 4.0.

General Permit G70-A allows the registrant to choose which sections of the permit they are seeking registration under. Therefore, please mark which additional sections that you are applying for registration under. If the applicant is seeking registration under multiple sections, please select all that apply. Please keep in mind, that if this registration is approved, the issued registration will state which sections will apply to your affected facility.

Section 5	Natural Gas Well Affected Facility	☒
Section 6	Storage Vessels*	☒
Section 7	Gas Producing Units, In-Line Heaters, Heater Treaters, and Glycol Dehydration Reboilers	☒
Section 8	Pneumatic Controllers Affected Facility (NSPS, Subpart OOOO)	☐
Section 9	*Reserved*	☐
Section 10	Natural gas-fired Compressor Engine(s) (RICE)**	☒
Section 11	Tank Truck Loading Facility ***	☒
Section 12	Standards of Performance for Storage Vessel Affected Facilities (NSPS, Subpart OOOO)	☒
Section 13	Standards of Performance for Stationary Spark Ignition Internal Combustion Engines (NSPS, Subpart JJJJ)	☒
Section 14	Control Devices not subject to NSPS, Subpart OOOO	☒
Section 15	National Emissions Standards for Hazardous Air Pollutants for Stationary Reciprocating Internal Combustion Engines (40CFR63, Subpart ZZZZ)	☐
Section 16	Glycol Dehydration Units	☐
Section 17	Dehydration Units With Exemption from NESHAP Standard, Subpart HH § 63.764(d) (40CFR63, Subpart HH)	☐
Section 18	Dehydration Units Subject to NESHAP Standard, Subpart HH and Not Located Within an UA/UC (40CFR63, Subpart HH)	☐
Section 19	Dehydration Units Subject to NESHAP Standard, Subpart HH and Located Within an UA/UC (40CFR63, Subpart HH)	☐

***** *Applicants that are subject to Section 6 may also be subject to Section 12 if the applicant is subject to the NSPS, Subpart OOOO control requirements or the applicable control device requirements of Section 14.*

****** *Applicants that are subject to Section 10 may also be subject to the applicable RICE requirements of Section 13 and/or Section 15.*

******* *Applicants that are subject to Section 11 may also be subject to control device requirements of Section 14.*

NATURAL GAS FIRED BOILER/LINE HEATER DATA SHEET

Source ID #[1]	Status[2]	Design Heat Input (mmBtu/hr)[3]	Hours of Operation (hrs/yr)[4]	Fuel Heating Value (Btu/scf)[5]	
GPU-1	EXIST	1.5 MMBTU/Hr	8760	1270 BTU/scf (HHV)	
GPU-2	EXSIT	1.5 MMBTU/Hr	8760	1270 BTU/scf (HHV)	
TEG-1	**NEW**	**0.013 MMBTU/Hr**	**8760**	**1270 BTU/scf (HHV)**	

1. Enter the appropriate Source Identification Numbers (Source ID #) for each boiler or line heater located at the compressor station. Boilers should be designated BLR-1, BLR-2, BLR-3, etc. Heaters or Line Heaters should be designated HTR-1, HTR-2, HTR-3, etc. Enter glycol dehydration unit Reboiler Vent data on the *Glycol Dehydration Unit Data Sheet*.
2. Enter the Status for each boiler or line heater using the following:

   EXIST Existing Equipment NEW Installation of New Equipment
   REM Equipment Removed
3. Enter boiler or line heater design heat input in mmBtu/hr.
4. Enter the annual hours of operation in hours/year for each boiler or line heater.
5. Enter the fuel heating value in Btu/standard cubic foot.

STORAGE TANK DATA SHEET

Source ID #[1]	Status[2]	Content[3]	Volume[4]	Dia[5]	Throughput[6]	Orientation[7]	Liquid Height[8]
T03	EXIST	Condensate	210 BBL	10.0	577,080 gallons/yr	VERT	10 feet
T04	EXIST	Condensate	210 BBL	10.0	577,080 gallons/yr	VERT	10 feet
T01	EXIST	Produced Water	210 BBL	10.0	529,200 gallons/yr	VERT	10 feet
T02	EXIST	Produced Water	210 BBL	10.0	529,200 gallons/yr	VERT	10 feet

1. Enter the appropriate Source Identification Numbers (Source ID #) for each storage tank located at the compressor station. Tanks should be designated T01, T02, T03, etc.
2. Enter storage tank Status using the following:

   EXIST Existing Equipment NEW Installation of New Equipment
   REM Equipment Removed
3. Enter storage tank content such as condensate, pipeline liquids, glycol (DEG or TEG), lube oil, etc.
4. Enter storage tank volume in gallons.
5. Enter storage tank diameter in feet.
6. Enter storage tank throughput in gallons per year.
7. Enter storage tank orientation using the following:

   VERT Vertical Tank HORZ Horizontal Tank
8. Enter storage tank average liquid height in feet.

AIR POLLUTION CONTROL DEVICE
Vapor Combustion Control Device Sheet

Complete this vapor combustion control device sheet for each enclosed combustion device, flare, thermal oxidizer, or completion combustion device that is located at the natural gas production pad for the purpose of thermally destructing waste gas to control emissions of regulated pollutants to the atmosphere.

IMPORTANT: READ THE INSTRUCTIONS ACCOMPANYING THIS FORM BEFORE COMPLETING.

General Information

1. Control Device ID#: **EC-1**	2. Installation Date: **Upon receipt of Permit** ☒ New	
3. Maximum Rated Total Flow Capacity: **No limit. Only limit on total BTU/Hr**	4. Maximum Design Heat Input: **10.0 MMBtu/hr**	5. Design Heat Content: **No limit. Only limit on total BTU/hr**

Control Device Information

6. Select the type of vapor combustion control device being used: ☒ Enclosed Combustion Device

☐ Elevated Flare ☐ Ground Flare ☐ Thermal Oxidizer ☐ Completion Combustion Device

7. Manufacturer: **Hy-Bon Engineering, Inc.** Model No. **CH 10.0**	8. Hours of operation per year: **8760 Potential.**

9. List the emission units whose emissions are controlled by this vapor combustion control device:
(Emission Point ID#: 7E)

10. Emission Unit ID#	Emission Source Description:	Emission Unit ID#	Emission Source Description:
T01	**Produced Water Tank**	**T03**	**Condensate Tank**
T02	**Produced Water Tank**	**T04**	**Condensate Tank**

If this vapor combustor controls emissions from more than six emission units, please attach additional pages.

11. Assist Type	12. Flare Height	13. Tip Diameter	14. Was the design per §60.18?
☐ Steam - ☐ Air - ☐ Pressure - ☒ Non -	**11 ft**	**0.25 ft**	☒Yes ☐No

Waste Gas Information

15. Maximum waste gas flow rate (scfm):	16. Heat value of waste gas stream (BTU/ft3)	17. Temperature of the emissions stream (°F)	18. Exit Velocity of the emissions stream (ft/s)
20	**1257-2345**	**1400-2100**	**78.4 (at max flow)**

19. Provide an attachment with the characteristics of the waste gas stream to be burned. **See Calculations (Tank Emissions) in Attachment I - Calculations**

Pilot Information				
20. Type/Grade of pilot fuel:	21. Number of pilot lights:	22. Fuel flow rate to pilot flame per pilot (scf/hr):	23. Heat input per pilot (BTU/hr):	24. Will automatic re-ignition be used?
Natural Gas	**1**	**63**	**80,000**	☒ Yes ☐ No

25. If automatic re-ignition will be used, describe the method:
The unit will try to reignite up to 25 times. After that it will go into manual mode which means someone will need to come out and start it up again.

26. Describe the method of controlling flame: **Ignition module located in the combustor control panel**

27. Is pilot flame equipped with a monitor to detect the presence of the flame? ☒ Yes ☐ No	28. If yes, what type? ☒ Thermocouple ☐ Infra-Red ☐ Ultra Violet ☐ Camera with monitoring control room ☐ Other, describe:

29. Pollutant(s) Controlled	30. % Capture Efficiency	31. Manufacturer's Guaranteed Control Efficiency (%)
Tank VOCs	**>99% (hard piped)**	**99%**
	For Permitting Purposes a capture and control efficiency of only 98% is claimed.	

32. Has the control device been tested by the manufacturer and certified? **Yes**

33. Describe all operating ranges and maintenance procedures required by the manufacturer to maintain warranty: **Combustor burner, pilot, and air inlet arrestor must be checked for foreign debris (dust, sand, etc.) and cleaned at least quarterly**.

34. Additional Information Attached? ☒ **YES** ☐ **NO**

Please attach a copy of manufacturer's data sheet.
Please attach a copy of manufacturer's drawing.
Please attach a copy of the manufacturer's performance testing.

If any of the requested information is not available, please contact the manufacturer.

ATTACHMENT H

Air Pollution Control Device Sheets

2404 Commerce Dr.
Midland, TX 79703
432-697-2292
hy-bon.com

100 Ayers Blvd.
Belpre, OH 45714
740-401-4000
ediplungerlift.com

With the fairly recent publication of the NSPS OOOO emission standard, all storage tank facilities constructed on or after August 23, 2011 will be allowed to emit 6 Tons or less of VOC's per year. This regulation not only forces companies to monitor and control their emissions, but it also forces the *means* of emission monitoring and controlling to be more reliable and exact. In response to such a stringent protocol, HY-BON Engineering Company is pleased to offer the **CH10.0** enclosed Vapor Combustor Unit (VCU). Built upon a foundation of 60+ years' experience with tank vapors, the VCU is the solution for reducing residual tank vapor emissions when a Vapor Recovery Unit (VRU) is not sufficient or a viable option.

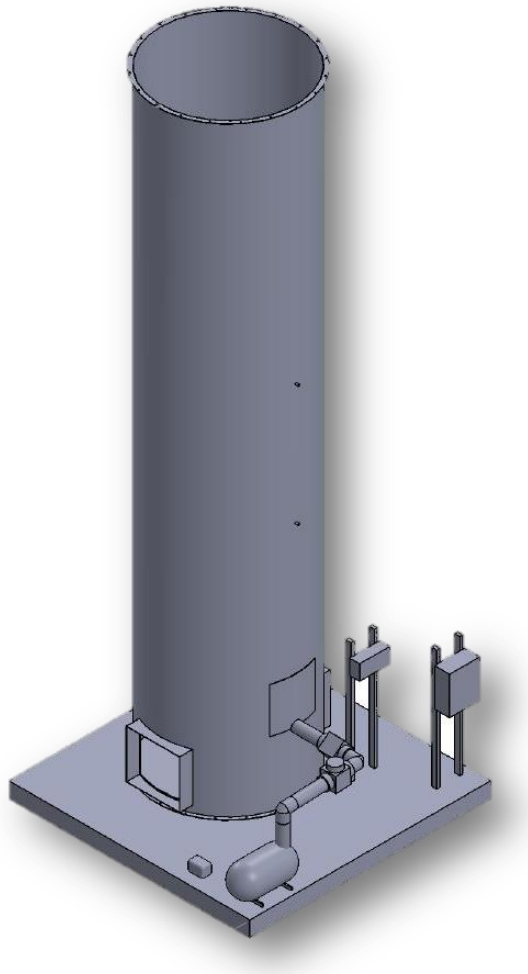

GENERAL PROPERTIES	
TYPE	Enclosed Tank Battery Flare
AMBIENT TEMPERATURE	-20 °F to +100 °F
PILOT FUEL REQUIREMENTS	Propane or Site Gas @5psi of natural gas = 13.3 SCFM @5psi of propane = 12.5 SCFM
BURNER SIZE	10.0 million BTU/hr
INLET PRESSURE REQUIRMENTS	Minimum 0.5 oz/in^2 (~1.0 inches w.c.)
TURN DOWN RATIO	5:1
DESTRUCTION EFFICIENCY	99.99% DRE
MECHANICAL PROPERTIES	
DESIGN WIND SPEED	100 MPH
AMBIENT TEMPERATURE	-20 °F to +120 °F
ELECTRICAL AREA CLASSIFICATION	General Area Classification (Non-Hazardous)
ELEVATION	up to 3,000ft ASL
PROCESS PROPERTIES	
SMOKELESS CAPACITY	100%
OPERATING TEMPERATURE	800 °F to 2000 °F (1500 °F Nominal)
UTILITIES	
PILOT GAS	Process Gas
ELECTRICITY	1 Phase, 60 Hz, 120V/10A
SOLAR PANEL OPTION AVAILABLE	YES

- EPA 40 CFR 60, Quad O Compliant
- Completely Enclosed Combustion
- 99.99% Destruction Efficiency
- Fully Automated System
- Output Operational Data via Thumb Drive
- Capable of SCADA Integration

Revision #3: 09/04/2015

2404 Commerce Dr.
Midland, TX 79703
432-697-2292
hy-bon.com

100 Ayers Blvd.
Belpre, OH 45714
740-401-4000
ediplungerlift.com

CH10.0: Flow Rate vs Flow Pressure with Corresponding Specific Gravity

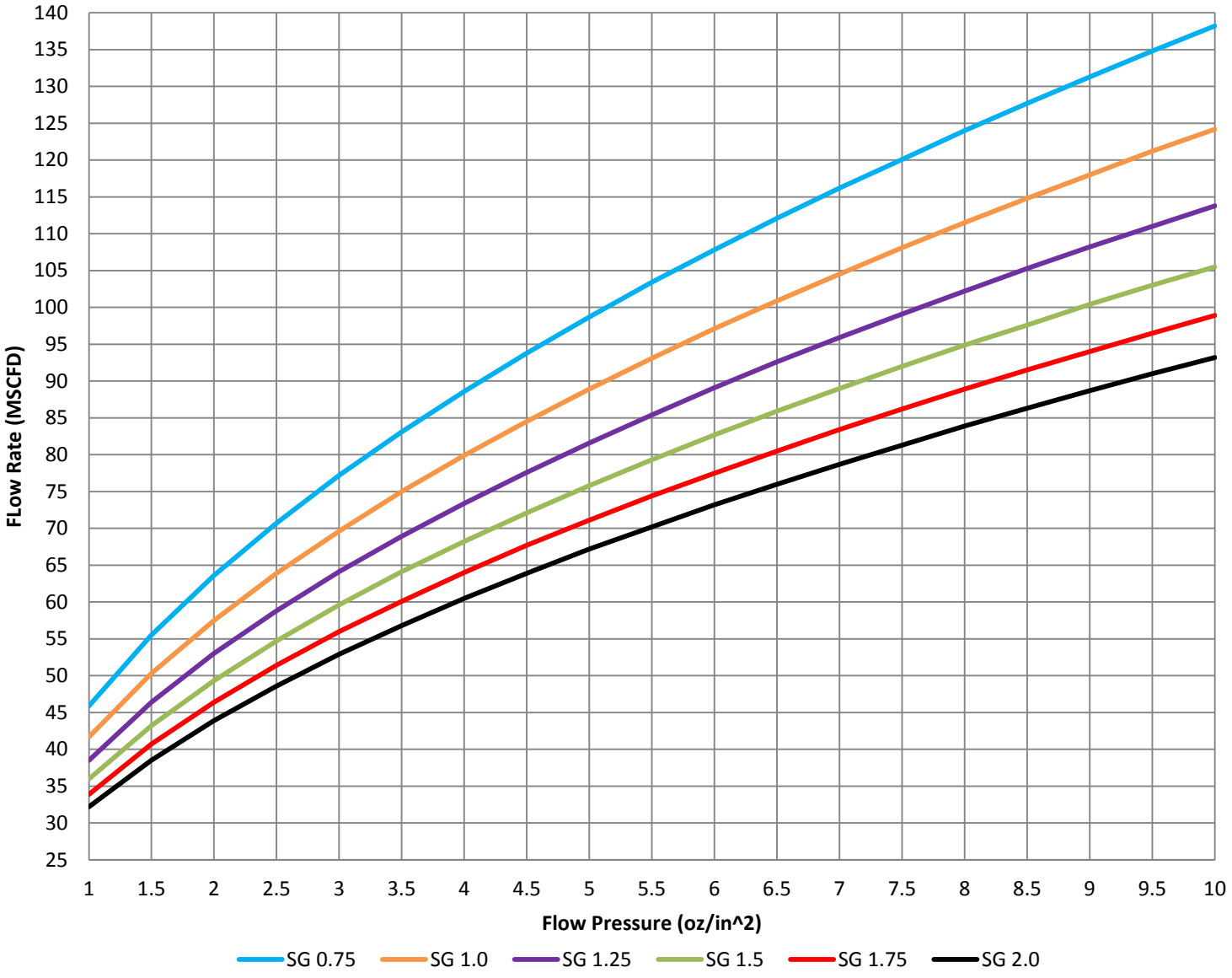

Model 5120 Thermoelectric Generators

Global Thermoelectric's Model 5120 Thermoelectric Generator contains no moving parts. It is a reliable, low maintenance source of DC electrical power for any application where regular utilities are unavailable or unreliable.

Power Specifiations

Power Rating at 20°C
120 Watts at 6.7 Volts
108 Watts at 12 Volts
108 Watts at 24 Volts
108 Watts at 48 Volts

Electrical

Adjustment:	6.7V	up to 11 Volts
	12 V	12 -18 Volts
	24 V	24 - 30 Volts
	48 V	48 - 60 Volts

Reverse current protection included.

Output: Terminal block which accepts up to 8 AWG wire. Opening for 3/4" conduit in the base of the cabinet.

Fuel

Natural Gas:	8.8 m^3/day (311 ft^3/day) of Std. 1000 BTU/SCF (37.7 MJ/SM^3) gas
Propane:	11.4 l/day (3.0 US gal/day)
Max. Supply Pressure:	1724 kPa (250 psi)
Min. Supply Pressure:	103 kPa (15 psi)
Fuel Connection:	1/4" MNPT

Environmental

Ambient Operation Temperature: Max. 55°C (130°F) Min. -55°C (-67°F)
Operating Conditions: Unsheltered operation

Materials of Construction

Cabinet:	304 SS
Cooling Type:	Natural Convection
Thermopile:	Hermetically Sealed Lead Tin-Telluride (PbSnTe)
Burner:	Meeker Type/Inconel 600
Fuel System:	Brass, Aluminum & SS

Standard Features
- Automatic Spark Ignition (SI)
- Fuel Filter
- Low Voltage Alarm Contacts (VSR)
- Volt & Amp Meter

Optional Features
- Cathodic Protection Interface
- Pole Mount or bench stand
- Automatic Fuel Shut-off (SO)
- Corrosive Environmental Fuel System
- Flame Arrestor

Note: Specifications shown are for standard configurations. Global Thermoelectric's Applications Engineering Department is available to design custom voltages, fuel supply systems and non-standard operating temperatures.

Global Thermoelectric

Power where you need it.

Typical Installation

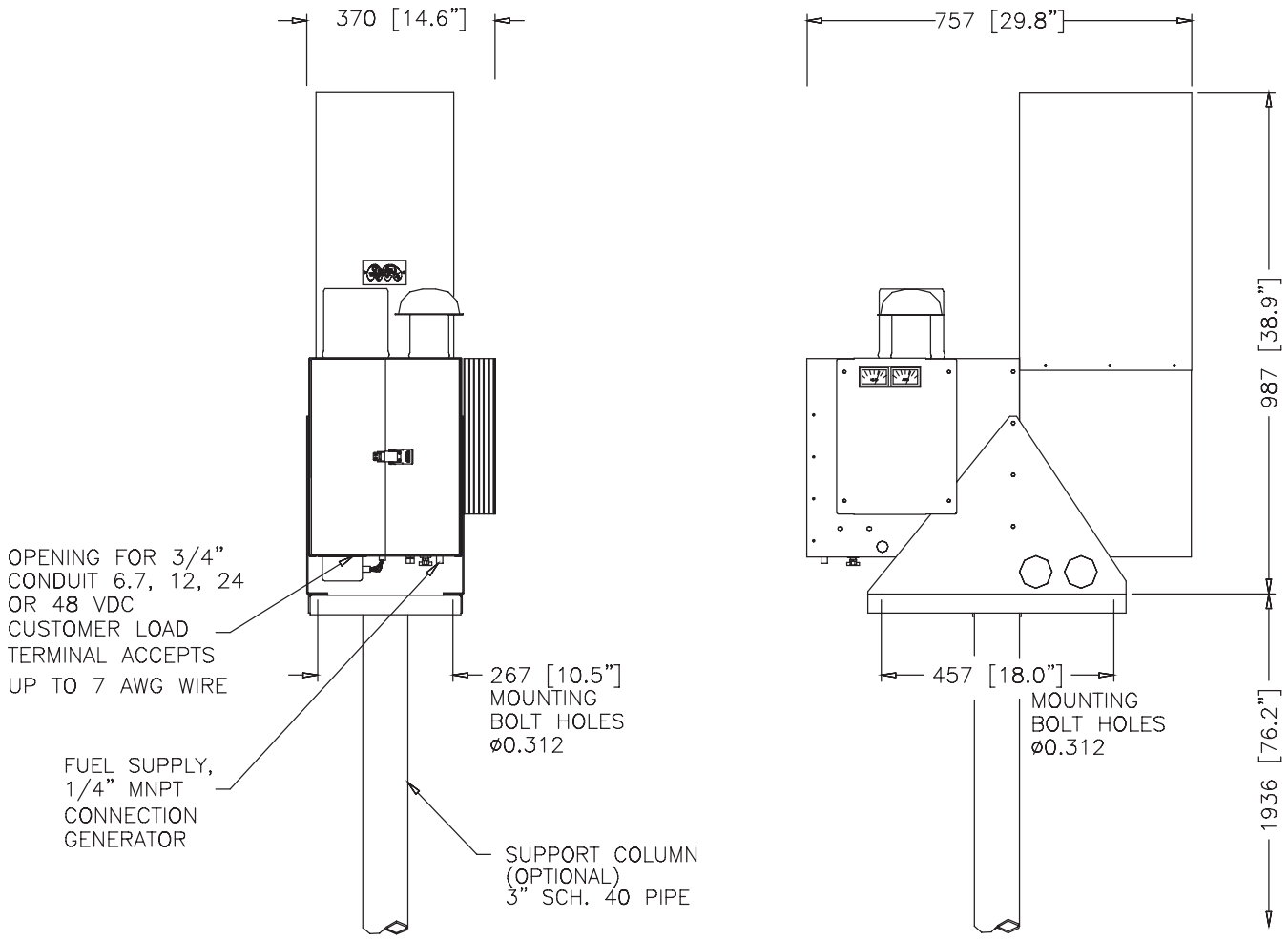

NOTES:
1. GENERATOR WEIGHT: 60 kg [132 lb].
2. DIMENSIONS IN mm [INCHES].

Power where you need it.

Corporate Office
#9, 3700 - 78 Avenue SE
Calgary, Alberta T2C 2L8
CANADA
Phone: (403) 236-5556
Fax: (403) 236-5575

US Sales
P.O. Box 38624
Houston, TX 77238
Phone: (281) 445-1515
Fax: (281) 445-6060
Toll Free: 1 800 848-4113

ATTACHMENT I

Emissions Calculations

Jay-Bee Oil & Gas, Inc.

Bashful Well Pad Production Facility
Tyler County, WV

Source	Description	NOx lb/hr	CO lb/hr	CO2e lb/hr	VOC lb/hr	SO2 lb/hr	PM lb/hr	n-Hexane lb/Hr	benzene lb/hr	formaldehyde lb/hr	Total HAPs lb/hr
VRU-1	VRU Compressor [4]	0.52	0.89	89.36	0.02	0.000	0.013		0.001	0.014	0.021
GPU-1 to GPU-4	GPU's	0.30	0.25	362.36	0.02	0.002	0.023	0.005	0.002	0.000	0.006
---	Blowdowns[1]			N/A	N/A						
TNK1-TNK6	Condensate Tanks + Water Tanks[2]			3.50	8.64			0.550			0.790
EC-1	Condensate Tanks + Water Tanks[5]	0.27	1.45	467.09	3.49	0.000	0.013	0.960	0.000		0.320
TEG-1	Thermo-Electric Generator	0.00	0.00	1.57	0.00	0.000	0.000	0.000	0.000	0.000	0.000
TL-1	Condensate Truck Loading[3]				51.00						2.510
TL-2	Water Truck Loading[3]				0.14						
---	Truck Traffic Fugitive Dust						6.32				
---	Fittings Fugitive Emissions			0.77	0.31						0.010
Total		1.09	2.59	925	63.61	0.00	6.37	1.52	0.00	0.01	3.66

Source		NOx tpy	CO tpy	CO2e tpy	VOC tpy	SO2 tpy	PM tpy	n-Hexane TPY	benzene tpy	formaldehyde tpy	Total HAPs tpy
RU-1	VRU Compressor [4]	2.27	3.89	391	0.09	0.002	0.06		0.00	0.06	0.09
GPU-1 to GPU-4	GPU's	1.31	1.10	1,587	0.07	0.008	0.10	0.02	0.00	0.00	0.02
---	Blowdowns[1]			1	0.01						
TNK1-TNK6	Condensate Tanks + Water Tanks[2]			15	38.38			2.41			3.46
EC-1	Condensate Tanks + Water Tanks[5]	1.20	6.35	2,046	15.33	0.00	0.06	0.96	0.00		1.38
TEG-1	Thermo-Electric Generator	0.01	0.00	7	0.00	0.00	0.00	0.00	0.00	0.00	0.00
TL-1	Condensate Truck Loading[3]				3.51						0.17
TL-2	Water Truck Loading[3]				0.02						
---	Truck Traffic Fugitive Dust						0.68				
---	Fittings Fugitive Emissions			3	1.34						0.040
Total		4.79	11.35	4,051	58.76	0.01	0.90	3.39	0.00	0.06	5.17
	Existing Permit Registration	3.56	4.98	1,889	15.96	0.01	0.13	0.18	0.00	0.06	0.27
	Increase	**1.23**	**6.37**	**2,162**	**42.80**	**0.00**	**0.77**	**3.22**	**0.00**	**0.00**	**4.90**

[1] See Attachment C for Blowdown Calculations

[2] Condensate and water tank emissions are currently controlled by a VRU at 95% . This entry represents the un-controlled 5%.

[3] Truck loading is un-controlled.

[4] Emission presented herein for VOCs and Formaldehyde represent un-controlled Mfg. specs. + 15%. The Catalyst Warranty had 0% reduction for these parameters

[5] Condensate and water tank emissions are alternately controlled by an Enclosed Combustor at 98%. The entries for VOC, n-hexane, HAPs and CO2e represents emissions of organics based on a 98% capture and control efficiency.

Jay-Bee Oil &Gas ,LLC

Bashful Well Pad Production Facility
Tyler County, WV

Controlled Emission Rates

Source CE-1
Flash Gas Compressor

Engine Data:

Engine Manufacturer	Cummins	
Engine Model	G5.9	
Type (Rich-burn or Low Emission)	Rich Burn	
Aspiration (Natural or Turbocharged)	Natural	
Manufacturer Rating	84	hp
Speed at Above Rating	1,800	rpm
Configeration (In-line or Vee)	In-line	
Number of Cylinders	6	
Engine Bore	4.020	inches
Engine Stroke	4.720	inches
Engine Displacement	359	cu. in.
Engine BMEP	103	psi
Fuel Consumption (HHV)	7,914	Btu/bhp-hr

Emission Rates:

	g/bhp-hr	lb/hr	tons/year	g/hr	lb/day	AP-42 4strokerich lb/mmbtu	Comment
Oxides of Nitrogen, NOx	2.800	0.52	2.27	235	12.44		
Carbon Monoxide CO	4.800	0.89	3.89	403	21.33		
VOC (NMNEHC)	0.110	0.02	0.09	9	0.49		
CO2	449	83	364	37,716	1,996		
CO2e		89	391				
Total Annual Hours of Operation	**8,760**						
SO2		0.0004	0.0017			0.0006	
PM2.5		0.0063	0.0277			0.0095	
PM (Condensable)		0.0066	0.0289			0.00991	
CH_4		0.1262	0.5529			0.0022	Factor From 40 CFR 98, Table C-2
N_2O		0.0115	0.0503			0.0002	Factor From 40 CFR 98, Table C-2
acrolein		0.0017	0.0077			0.00263	
acetaldehyde		0.0019	0.0081			0.00279	
formaldehyde	0.0760	0.0141	0.0616				Per Mfg.
benzene		0.0011	0.0046			0.00158	
toluene		0.0004	0.0016			0.000558	
ethylbenzene		2E-05	0.0001			2.48E-05	
xylene s		0.0001	0.0006			0.000195	
methanol		0.002	0.0089			0.00306	
total HAPs		0.0213	0.0932				

453.59 grams = 1 pound
2,000 pounds = 1 ton

Exhaust Parameters:

Exhaust Gas Temperature	1,078	deg. F
Exhaust Gas Mass Flow Rate		lb/hr
Exhaust Gas Mass Flow Rate	430	acfm
Exhaust Stack Height	96	inches
	8.00	feet
Exhaust Stack Inside Diameter	4	inches
	0.333	feet
Exhaust Stack Velocity	82.1	ft/sec
	4,927.4	ft/min

Jay-Bee Oil &Gas ,LLC

Bashful Well Pad Production Facility
Tyler County, WV

Potential Emission Rates

Source HTR-1

Burner Duty Rating	3000.0	Mbtu/hr	2 GPU's at 1500 MBTU/Hr Each
Burner Efficiency	98.0	%	
Gas Heat Content (HHV)	1269.7	Btu/scf	
Total Gas Consumption	57863.3	scfd	
H2S Concentration	0.000	Mole %	
Hours of Operation	8760		

NOx	0.3001	lbs/hr	1.315	TPY
CO	0.2521	lbs/hr	1.104	TPY
CO2	360.1	lbs/hr	1577.4	TPY
CO2e	362	lbs/hr	1,587	tpy
VOC	0.0165	lbs/hr	0.072	TPY
SO2	0.0018	lbs/hr	0.008	TPY
H2S	0.0000	lbs/hr	0.000	TPY
PM10	0.0228	lbs/hr	0.100	TPY
CHOH	0.0002	lbs/hr	0.001	TPY
Benzene	0.0000	lbs/hr	0.000	TPY
N-Hexane	0.0054	lbs/hr	0.024	TPY
Toluene	0.0000	lbs/hr	0.000	TPY
Total HAPs	0.0056	lbs/hr	0.025	TPY

AP-42 Factors Used

NOx	**100**	**Lbs/MMCF**	
CO	**84**	**Lbs/MMCF**	
CO_2	**120,000**	**Lbs/MMCF**	**Global Warming Potential = 1**
VOC	**5.5**	**Lbs/MMCF**	
PM	**7.6**	**Lbs/MMCF**	
SO_2	**0.6**	**Lbs/MMCF**	
CH_4	**2.3**	**Lbs/MMCF**	**Global Warming Potential = 25**
N_2O	**2.2**	**Lbs/MMCF**	**Global Warming Potential =310**
HCOH	**0.075**	**Lbs/MMCF**	
Benzene	**0.0021**	**Lbs/MMCF**	
n-Hexane	**1.8**	**Lbs/MMCF**	
Toluene	**0.0034**	**Lbs/MMCF**	

Bashful Well Pad Production Facility
Tyler County, WV

'otential Emission Rate

Enclosed Combustor Pilot

Burner Duty Rating	80.0	Mbtu/hr
Burner Efficiency	99.0	%
Gas Heat Content (HHV)	1269.7	Btu/scf
Total Gas Consumption	1527.4	scfd
H2S Concentration	0.000	Mole %
Hours of Operation	8760	

NOx	0.0079	lbs/hr	0.035	TPY
CO	0.0067	lbs/hr	0.029	TPY
CO2	9.5	lbs/hr	41.6	TPY
CO2e	10	lbs/hr	42	TPY
VOC	0.0004	lbs/hr	0.002	TPY
SO2	0.0000	lbs/hr	0.000	TPY
H2S	0.0000	lbs/hr	0.000	TPY
PM10	0.0006	lbs/hr	0.003	TPY
CHOH	0.0000	lbs/hr	0.000	TPY
Benzene	0.0000	lbs/hr	0.000	TPY
N-Hezane	0.0001	lbs/hr	0.001	TPY
Toluene	0.0000	lbs/hr	0.000	TPY
Total HAPs	0.0001	lbs/hr	0.001	TPY

AP-42 Factors Used (Tables 1.4.1-1.4.3)

NOx	**100**	**Lbs/MMCF**	
CO	**84**	**Lbs/MMCF**	
CO_2	**120,000**	**Lbs/MMCF**	**Global Warming Potential = 1**
VOC	**5.5**	**Lbs/MMCF**	
PM	**7.6**	**Lbs/MMCF**	
SO_2	**0.6**	**Lbs/MMCF**	
CH_4	**2.3**	**Lbs/MMCF**	**Global Warming Potential = 25**
N_2O	**2.2**	**Lbs/MMCF**	**Global Warming Potential =310**
HCOH	**0.075**	**Lbs/MMCF**	
Benzene	**0.0021**	**Lbs/MMCF**	
n-Hexane	**1.8**	**Lbs/MMCF**	
Toluene	**0.0034**	**Lbs/MMCF**	

Bashful Well Pad Production Facility
Tyler County, WV

Potential Emission Rates

Source EC-1

Enclosed Vapor Combustor - Control of Tank Emissions

Destruction Efficiency	98.0	%		
Gas Heat Content (HHV)	2313.1	Btu/scf		
Max Flow to T-E	0.040	MMSCFD	14.770	MMCF/Yr
Max BTUs to Flare	3.894	MMBTU/Hr	34,164	MMBTU/Yr

NOx	0.26	lbs/hr	1.16	tpy
CO	1.44	lbs/hr	6.32	tpy
CO2	455.13	lbs/hr	1,996.7	tpy
CO2e	457.53	lb/hr	2,004.2	tpy
VOC	3.49	lb/hr	15.33	tpy
CH4	0.06	lbs/hr	0.2500	tpy
N2O	0.0009	lbs/hr	0.0038	tpy
PM	0.0128	lb/hr	0.0561	tpy
Benzene	0.0000	lb/hr	0.0000	tpy
CHOH	0.0001	lb/hr	0.0006	tpy
n-Hexane	0.2200	lb/hr	0.9600	tpy
Toluene	0.0000	lb/hr	0.0000	tpy
Total HAP	0.3200	lb/hr	1.3800	tpy

Notes: VOC, Total HAP, N-Hexane and CH4 emissions are taken from the Condensate and Produced Water Tank Emissions sheet in the Calculations Section.

Factors Used

AP-42 Table 13.5-1	**NOx**	**0.068**	**Lbs/MMBTU**
AP-42 Table 13.5-1	**CO**	**0.37**	**Lbs/MMBTU**
40 CFR 98 Table C-1	**CO2**	**116.89**	**Lbs/MMBTU**
40 CFR 98 Table C-2	**CH4**	**0.0022**	**Lbs/MMBTU**
40 CFR 98 Table C-2	**N2O**	**0.00022**	**Lbs/MMBTU**
AP-42 Table 1.4-2	**PM**	**7.6**	**lb/MMSCF**
AP-42 Table 1.4-3	**Benzene**	**0.0021**	**lb/MMSCF**
AP-42 Table 1.4-3	**Toluene**	**0.0034**	**lb/MMSCF**
AP-42 Table 1.4-3	**Hexane**	**1.8**	**lb/MMSCF**
AP-42 Table 1.4-3	**CHOH**	**0.075**	**lb/MMSCF**

Jay-Bee Oil &Gas ,LLC

Bashful Well Pad Production Facility
Tyler County, WV

Potential Emission Rates

Source TEG-1

Burner Duty Rating	13.0	Mbtu/hr
Burner Efficiency	98.0	%
Gas Heat Content (HHV)	1263.0	Btu/scf
Total Gas Consumption	252.1	scfd
H2S Concentration	0.000	Mole %
Hours of Operation	8760	

NOx	0.0013	lbs/hr	0.006	TPY
CO	0.0011	lbs/hr	0.005	TPY
CO2	1.6	lbs/hr	6.8	TPY
CO2e	2	lbs/hr	7	tpy
VOC	0.0001	lbs/hr	0.000	TPY
SO2	0.0000	lbs/hr	0.000	TPY
H2S	0.0000	lbs/hr	0.000	TPY
PM10	0.0001	lbs/hr	0.000	TPY
CHOH	0.0000	lbs/hr	0.000	TPY
Benzene	0.0000	lbs/hr	0.000	TPY
N-Hexane	0.0000	lbs/hr	0.000	TPY
Toluene	0.0000	lbs/hr	0.000	TPY
Total HAPs	0.0000	lbs/hr	0.000	TPY

AP-42 Factors Used

NOx	**100**	**Lbs/MMCF**	
CO	**84**	**Lbs/MMCF**	
CO_2	**120,000**	**Lbs/MMCF**	**Global Warming Potential = 1**
VOC	**5.5**	**Lbs/MMCF**	
PM	**7.6**	**Lbs/MMCF**	
SO_2	**0.6**	**Lbs/MMCF**	
CH_4	**2.3**	**Lbs/MMCF**	**Global Warming Potential = 25**
N_2O	**2.2**	**Lbs/MMCF**	**Global Warming Potential =310**
HCOH	**0.075**	**Lbs/MMCF**	
Benzene	**0.0021**	**Lbs/MMCF**	
n-Hexane	**1.8**	**Lbs/MMCF**	
Toluene	**0.0034**	**Lbs/MMCF**	

Jay-Bee Oil & Gas, Inc.
FUGITIVE EMISSIONS

Bashful Well Pad Production Facility
Tyler County, WV

Fugitive VOC Emissions

Volatile Organic Compounds, NMNEHC from gas analysis:	19.00	weight percent
Methane from gas analysis:	59.08	weight percent
Carbon Dioxide from gas analysis:	0.29	weight percent
Gas Density	0.0583	lb/scf

Emission Source:	Number	Oil & Gas Production*		VOC %	VOC, lb/hr	VOC TPY	CO2 lb/Hr	CO2 TPY	CH4 lb/hr	CH4 TPY	CO2e
Valves:											
Gas/Vapor:	6	0.02700	scf/hr	19.0	0.002	0.008	0.000	0.000	0.006	0.0244	0.611
Light Liquid:	13	0.05000	scf/hr	100.0	0.038	0.166					0.000
Heavy Liquid (Oil):	-	0.00050	scf/hr	100.0	0.000	0.000					0.000
Low Bleed Pneumatic	-	1.39000	scf/hr	19.0	0.000	0.000	0.000	0.000	0.000	0.0000	0.000
Relief Valves:	10	0.04000	scf/hr	19.0	0.004	0.019	0.000	0.000	0.014	0.0604	1.509
Open-ended Lines, gas:	2	0.06100	sfc/hr	19.0	0.001	0.006					0.000
Open-ended Lines, liquid:	-	0.05000	lb/hr	100.0	0.000	0.000					0.000
Pump Seals:											0.000
Gas:	-	0.00529	lb/hr	19.0	0.000	0.000	0.000	0.000	0.000	0.0000	0.000
Light Liquid:	-	0.02866	lb/hr	100.0	0.000	0.000					0.000
Heavy Liquid (Oil):	-	0.00133	lb/hr	100.0	0.000	0.000					0.000
Compressor Seals, Gas:	1	0.01940	lb/hr	19.0	0.004	0.016	0.000	0.000	0.001	0.0029	0.073
Connectors:											0.000
Gas:	24	0.00300	scf/hr	19.0	0.001	0.003	0.000	0.000	0.002	0.0109	0.272
Light Liquid:	36	0.00700	scf/hr	100.0	0.252	1.104					0.000
Heavy Liquid (Oil):	-	0.00030	scf/hr	100.0	0.000	0.000					0.000
Flanges:											0.000
Gas:	16	0.00086	lb/hr	19.0	0.003	0.011	0.000	0.000	0.008	0.0356	0.890
Light Liquid:	12	0.00300	scf/hr	100.0	0.002	0.009					0.000
Heavy Liquid:		0.0009	scf/hr	100.0	0.000	0.000					0.000

Fugitive Calculations:

	lb/hr	t/y
VOC	**0.307**	**1.343**
CH4	**0.031**	**0.134**
CO2	**0.000**	**0.001**
CO2e	**0.766**	**3.36**

Notes: *Factors are from 40 CFR 98, Table W-1A (scf/hr), where available. Remaining are API (lb/hr)

Jay-Bee Oil & Gas, Inc.
GAS ANALYSIS INFORMATION

Bashful Well Pad Production Facility
Tyler County, WV

Inlet Gas Composition Information:

	Fuel Gas mole %	Fuel M.W. lb/lb-mole	Fuel S.G.	Fuel Wt. %	LHV, dry Btu/scf	HHV, dry Btu/scf	AFR vol/vol	VOC NM / NE	Z Factor	GPM
Nitrogen, N2	0.382	0.107	0.004	0.511			-		0.0038	
Carbon Dioxide, CO2	0.138	0.061	0.002	0.290			-		0.0014	
Hydrogen Sulfide, H2S	0.000	0.000	0.000	0.000	0.0	0.0	0.000		0.0000	
Helium, He	-	-	-	-			-		-	
Oxygen, O2	-	-	-	-			-		-	
Methane, CH4	77.158	12.378	0.427	59.077	701.7	779.3	7.353		0.7700	
Ethane, C2H6	14.716	4.425	0.153	21.119	238.2	260.4	2.455		0.1460	3.915
Propane	4.832	2.131	0.074	10.169	111.9	121.6	1.151	10.169	0.0475	1.324
Iso-Butane	0.627	0.364	0.013	1.739	18.8	20.4	0.194	1.739	0.0061	0.204
Normal Butane	1.131	0.657	0.023	3.137	34.1	36.9	0.350	3.137	0.0109	0.355
Iso Pentane	0.279	0.201	0.007	0.961	10.3	11.2	0.106	0.961	0.0028	0.102
Normal Pentane	0.266	0.192	0.007	0.916	9.9	10.7	0.101	0.916	0.0027	0.096
Hexane	0.258	0.222	0.008	1.061	11.4	12.3	0.117	1.061	0.0025	0.106
Heptane	0.213	0.213	0.007	1.019	10.9	11.7	0.112	1.019	0.0021	0.098
	100.000	20.953	0.723		1,147.0	1,264.4	11.939	19.003	0.9958	6.198

Gas Density (STP) = 0.058

Ideal Gross (HHV)	1,264.4
Ideal Gross (sat'd)	1,243.1
GPM	-
Real Gross (HHV)	1,269.7
Real Net (LHV)	1,151.8

Jay-Bee Oil & Gas, Inc.
GAS ANALYSIS INFORMATION

Bashful Well Pad Production Facility
Tyler County County, WV

Condensate Tank Flash Vapor Composition Information:

	Fuel Gas mole %	Fuel M.W. lb/lb-mole	Fuel S.G.	Fuel Wt. %	LHV, dry Btu/scf	HHV, dry Btu/scf	AFR vol/vol	VOC NM / NE	Z Factor	GPM
Nitrogen, N2	0.032	0.009	0.000	0.022			-		0.0003	
Carbon Dioxide, CO2	0.093	0.041	0.001	0.103			-		0.0009	
Hydrogen Sulfide, H2S	0.000	0.000	0.000	0.000	0.0	0.0	0.000		0.0000	
Helium, He	-	-	-	-			-		-	
Oxygen, O2	-	-	-	-			-		-	
Methane, CH4	21.006	3.370	0.116	8.458	191.0	212.2	2.002		0.2096	
Ethane, C2H6	26.977	8.112	0.280	20.358	436.7	477.4	4.500		0.2676	7.176
Propane	25.650	11.311	0.391	28.386	593.8	645.4	6.110	28.386	0.2520	7.030
Iso-Butane	5.272	3.064	0.106	7.690	158.2	171.4	1.633	7.690	0.0512	1.715
Normal Butane	11.899	6.916	0.239	17.357	358.3	388.2	3.685	17.357	0.1150	3.731
Iso Pentane	3.281	2.367	0.082	5.941	121.4	131.3	1.250	5.941	0.0328	1.195
Normal Pentane	3.198	2.307	0.080	5.791	118.5	128.2	1.219	5.791	0.0320	1.152
Hexane	1.776	1.531	0.053	3.841	78.2	84.5	0.804	3.841	0.0175	0.726
Heptane	0.816	0.818	0.028	2.052	41.6	44.9	0.428	2.052	0.0081	0.374
	100.000	39.846	1.376		2,097.7	2,283.4	21.630	71.059	0.9872	23.100

Gas Density (STP) = 0.111

Ideal Gross (HHV)	2,283.4
Ideal Gross (sat'd)	2,244.3
GPM	-
Real Gross (HHV)	2,313.1
Real Net (LHV)	2,124.9

Jay-Bee Oil & Gas, Inc.
GAS ANALYSIS INFORMATION

Bashful Well Pad Production Facility
Tyler County County, WV

Water Tank Flash Vapor Composition Information:

	Fuel Gas mole %	Fuel M.W. lb/lb-mole	Fuel S.G.	Fuel Wt. %	LHV, dry Btu/scf	HHV, dry Btu/scf	AFR vol/vol	VOC NM / NE	Z Factor	GPM
Nitrogen, N2	0.575	0.161	0.006	0.652			-		0.0057	
Carbon Dioxide, CO2	1.602	0.705	0.024	2.855			-		0.0160	
Hydrogen Sulfide, H2S	0.000	0.000	0.000	0.000	0.0	0.0	0.000		0.0000	
Helium, He	-	-	-	-			-		-	
Oxygen, O2	-	-	-	-			-		-	
Methane, CH4	74.187	11.902	0.411	48.188	674.7	749.3	7.070		0.7404	
Ethane, C2H6	9.798	2.946	0.102	11.929	158.6	173.4	1.634		0.0972	2.606
Propane	4.384	1.933	0.067	7.827	101.5	110.3	1.044	7.827	0.0431	1.202
Iso-Butane	1.841	1.070	0.037	4.332	55.2	59.9	0.570	4.332	0.0179	0.599
Normal Butane	2.043	1.187	0.041	4.808	61.5	66.6	0.633	4.808	0.0197	0.641
Iso Pentane	1.305	0.942	0.033	3.812	48.3	52.2	0.497	3.812	0.0131	0.475
Normal Pentane	0.928	0.670	0.023	2.711	34.4	37.2	0.354	2.711	0.0093	0.334
Hexane	1.149	0.990	0.034	4.009	50.6	54.6	0.520	4.009	0.0114	0.470
Heptane	2.188	2.192	0.076	8.877	111.6	120.4	1.147	8.877	0.0218	1.004
	100.000	24.699	0.853		1,296.4	1,424.0	13.469	36.376	0.9954	7.331

Gas Density (STP) = 0.069

Ideal Gross (HHV)	1,424.0
Ideal Gross (sat'd)	1,399.9
GPM	-
Real Gross (HHV)	1,430.5
Real Net (LHV)	1,302.3

GAS DATA INFORMATION

Specific Graivity of Air, @ 29.92 in. Hg and 60 -F, 28.9625
One mole of gas occupies, @ 14.696 psia & 32 -F 359.2 cu ft. per lb-mole
One mole of gas occupies, @ 14.696 psia & 60 -F 379.64 cu ft. per lb-mole

Hydrogen Sulfide (H2S) conversion chart:

0 grains H2S/100 scf	=	0.00000	mole % H2S
		0.0	ppmv H2S
0 mole % H2S	=	0	grains H2S/100 scf
		0.0	ppmv H2S
0 ppmv H2S	=	0.000	grains H2S/100 scf
		0.00000	mole % H2S

Ideal Gas at 14.696 psia and 60°F

		MW lb/mol	Specific Gravity	Lb per Cu Ft	Cu Ft per Lb	LHV, dry Btu/scf	HHV, dry Btu/scf	LHV Btu/lb	HHV Btu/lb	cu ft of air / 1 cu ft of gas	Z factor
Nitrogen	N2	28.013	0.9672	0.0738	13.552	0	0	0	0	0	0.9997
Carbon Dioxide	CO2	44.010	1.5196	0.1159	8.626	0	0	0	0	0	0.9964
Hydrogen Sulfide	H2S	34.076	1.1766	0.0898	11.141	587	637	6,545	7,100	7.15	0.9846
Water	H20	18.000	0.6215	0.0474	21.091	0	0	0	0	0	1.0006
Oxygen	O2	31.999	1.1048	0.0843	11.864	0	0	0	0	0	0.9992
Methane	CH4	16.043	0.5539	0.0423	23.664	909.4	1,010.0	21,520	23,879	9.53	0.9980
Ethane	C2H6	30.070	1.0382	0.0792	12.625	1,618.7	1,769.6	20,432	22,320	16.68	0.9919
Propane	C3H8	44.097	1.5226	0.1162	8.609	2,314.9	2,516.1	19,944	21,661	23.82	0.9825
Iso-Butane	C4H10	58.124	2.0069	0.1531	6.532	3,000.4	3,251.9	19,629	21,257	30.97	0.9711
Normal Butane	C4H10	58.124	2.0069	0.1531	6.532	3,010.8	3,262.3	19,680	21,308	30.97	0.9667
Iso Pentane	C5H12	72.151	2.4912	0.1901	5.262	3,699.0	4,000.9	19,478	21,052	38.11	1.0000
Normal Pentane	C5H12	72.151	2.4912	0.1901	5.262	3,706.9	4,008.9	19,517	21,091	38.11	1.0000
Hexane	C6H14	86.178	2.9755	0.2270	4.405	4,403.8	4,755.9	19,403	20,940	45.26	0.9879
Heptane	C7H16	100.205	3.4598	0.2639	3.789	5,100.0	5,502.5	22,000	23,000	52.41	0.9947

Real Gas at 14.696 psia and 60°F

		MW lb/mol	Specific Gravity	Lb per Cu Ft	Cu Ft per Lb	LHV, dry Btu/scf	HHV, dry Btu/scf	LHV Btu/lb	HHV Btu/lb	cu ft of air / 1 cu ft of gas	Gal/Mole	
Nitrogen	N2	28.013	0.9672	0.0738	13.552	0	0	0	0	0	4.1513	
Carbon Dioxide	CO2	44.010	1.5196	0.1159	8.626	0	0	0	0	0	6.4532	
Hydrogen Sulfide	H2S	34.076	1.1766	0.0898	11.141	621	672	6,545	7,100	7.15	5.1005	
Water	H2O	18.000	0.6215	0.0474	21.091						3.8376	
Oxygen	O2	31.999	1.1048	0.0843	11.864	0	0	0	0	0	3.3605	
Methane	CH4	16.043	0.5539	0.0423	23.664	911	1,012	21,520	23,879	9.53	6.4172	
Ethane	C2H6	30.070	1.0382	0.0792	12.625	1,631	1,783	20,432	22,320	16.68	10.126	
Propane	C3H8	44.097	1.5226	0.1162	8.609	2,353	3,354	19,944	21,661	23.82	10.433	
Iso-Butane	C4H10	58.124	2.0069	0.1531	6.532	3,101	3,369	19,629	21,257	30.97	12.386	
Normal Butane	C4H10	58.124	2.0069	0.1531	6.532	3,094	3,370	19,680	21,308	30.97	11.937	
Iso Pentane	C5H12	72.151	2.4912	0.1901	5.262	3,709	4,001	19,478	21,052	38.11	13.86	
Normal Pentane	C5H12	72.151	2.4912	0.1901	5.262	3,698	4,009	19,517	21,091	38.11	13.713	
Hexane	C6H14	86.178	2.9755	0.2270	4.405	4,404	4,756	19,403	20,940	45.26	15.566	16.3227
Heptane	C7H16	100.205	3.4598	0.2639	3.789	5,101	5,503	22,000	23,000	52.41	17.468	17.468

Jay-Bee Oil & Gas, Incorporated
Bashful Well Pad Production Facility
Condensate Tank Emissions

Utilizing direct measurements of the Gas to Oil (GOR) ratio and flash gas composition from a nearby Jay-Bee well pad (T103-6), the attached calculation spreadsheet was used to determine un-controlled VOC and HAP flash emissions from the Condensate tanks of 764.8 tpy and 69.1 tpy respectively for the revised maximum annual throughput of 27,480 BBL/Yr. Working and Breathing losses were calculated using EPA's Tanks 4.0 to be 2.15 tpy VOCs and 0.22 tpy HAPs (est.). RVP 6 Gasoline was used as a surrogate. As the RVP of the condensate was measured at 9.33 before flash losses, this was deemed appropriate. Thus, total uncontrolled tank emissions are projected to be 767 tpy of VOCs and 69.3 tpy of HAPs. As emissions from these tanks are anticipated to be continuous, this is equivalent to 175.1 pounds per hour VOCs and 15.8 pounds per hour HAPs.

The largest component to the HAPs is Hexane. Using the process described above, potential un-controlled n-Hexane emissions were determined to be 48.4 tons per year or 11.0 pounds per hour.

Methane is also be emitted at a maximum rate of 12.4 tpy (2.83 lb/hr) from the condensate tanks. Using the GHG factor of 25 for Methane, the CO_{2e} uncontrolled emission rate is 310 tpy. This is equivalent to 70.8 lb/hr of CO_{2e}

During operation of the VRU, emissions are controlled at a minimum of 95%. Actual control efficiency is anticipated to be much higher, but only 95% is claimed as allowed under the G70-A General Permit. Thus, when in operation, emissions will be controlled to 8.76 pounds per hour of VOCs and 0.79 pounds per hour of HAPs. Methane emissions will be controlled to 0.14 lb/hr while n-Hexane will be controlled to 0.55 pounds per hour.

The proposed Enclosed Combustor will control organic vapor emissions to at least 98%. Actual control efficiency is anticipated to be higher, but only 98% is claimed as allowed under the G70-A General Permit. Thus, when in operation, organic emissions from the combustor will be controlled to 3.50 pounds per hour of VOCs and 0.32 pounds per hour of HAPs. Methane emissions will be controlled to 0.06 lb/hr while n-Hexane will be controlled to 0.22 pounds per hour.

VRU Emissions

The VRU is permitted to operate continuously, except for brief intervals for preventive maintenance. It is conservatively estimated that the VRU will capture and control 95% of potential emissions. Thus, total potential tank emissions are calculated as follows:

VOCs

8.76 lb/hr (Controlled) x 8760 = 76,738 lb/yr or 38.37 tpy

HAPs
0.79 lb/Hr (Controlled) x 8760 = 6,920 lb/yr or 3.46 tpy

n-Hexane
0.55 lb/Hr (Controlled) x 8760 = 4,818 lb/yr or 2.41 tpy

Methane
0.16 lb/Hr (Controlled) x 8760 = 1,226 lb/yr or 0.61 tons per year

Enclosed Combustor Emissions
In order to include the enclosed combustor into the G70-A permit, it is assumed that the combustor will operate full time. Thus, it is conservatively estimated that the combustor will capture and control 98% of potential emissions. Total potential tank emissions via the combustor are therefore calculated as follows:

VOCs
3.50 lb/hr (Controlled) x 8760 = 30,660 lb/yr or 15.33 tpy

HAPs
0.32 lb/Hr (Controlled) x 8760 = 2,768 lb/yr or 1.38 tpy

n-Hexane
0.22 lb/Hr (Controlled) x 8760 = 1,927lb/yr or 0.96 tpy

Methane
0.06 lb/Hr (Controlled) x 8760 = 496 lb/yr or 0.25 tpy

Gas Flow to Combustor
Total gas flow to the combustor from the condensate tanks is derived from the condensate flash calculation spreadsheets (808.9 tpy total organics) plus working and breathing losses for the condensate tanks (2.15 tpy) for a total of 811.0 tpy. Using the density of the condensate vapor shown in the Excel spreadsheet (0.110 lb/scf), an annual gas flow to the combustor of 14.75 MMSCF/yr or 40,399 scfd was determined.

Using the HHV of 2313 BTU/scf of the condensate tank flash vapors as a conservative surrogate, this results in a maximum heat loading of 3.91 MMBTU/Hr.

Jay-Bee Oil & Gas - Bashful

Flash Emission Calculations

Using Gas-Oil Ratio Method

Un-Controlled

Site specific data

Gas-Oil-ratio	=	534	scf/bbl (Using Actual GOR from T103-6)
Throughput	=	27,480	bbl/yr
Stock tank gas molecular weight	=	39.56	g/mole

Conversions

1 lb	=	453.6	g
1 mole	=	22.4	L
1 scf	=	28.32	L
1 ton	=	2000	lb

Equations

$$E_{TOT} = Q\frac{(bbl)}{(yr)} \times R\frac{(scf)}{(bbl)} \times \frac{28.32(L)}{1(scf)} \times \frac{1(mole)}{22.4(L)} \times MW\frac{(g)}{(mole)} \times \frac{1(lb)}{453.6(g)}) \times \frac{1(ton)}{2000(lb)}$$

E_{TOT} = Total stock tank flash emissions (TPY)

R = Measured gas-oil ratio (scf/bbl)

Q = Throughput (bbl/yr)

MW = Stock tank gas molecular weight (g/mole)

$$E_{spec} = E_{TOT} \times X_{spec}$$

E_{spec} = Flash emission from constituent

X_{spec} = Weight fraction of constituent in stock tank gas

Flash Emissions

Constituent	TPY		
Total	809.0148		E_{TOT}
VOC	**764.7536**		Sum of C3+
Nitrogen	4.05E-02		
Carbon Dioxide	1.54E-01		
Methane	1.24E+01		
Ethane	3.17E+01		
Propane	5.69E+01		
Isobutane	2.27E+01		
n-Butane	6.38E+01		
2,2 Dimethylpropane	1.40E+00		
Isopentane	4.39E+01		
n-Pentane	5.64E+01		
2,2 Dimethylbutane	2.39E+00		
Cyclopentane	0.00E+00		
2,3 Dimethylbutane	3.58E+00		
2 Methylpentane	2.69E+01		
3 Methylpentane	1.75E+01		
n-Hexane	4.49E+01	HAP	
Methylcyclopentane	3.91E+00		
Benzene	7.52E-01	HAP	
Cyclohexane	6.76E+00		
2-Methylhexane	2.54E+01		
3-Methylhexane	2.13E+01		
2,2,4 Trimethylpentane	0.00E+00		
Other C7's	1.27E+01		
n-Heptane	3.69E+01		
Methylcyclohexane	2.25E+01		
Toluene	4.99E+00	HAP	
Other C8's	6.56E+01		
n-Octane	2.52E+01		
Ethylbenzene	4.86E+00	HAP	
M & P Xylenes	5.95E+00	HAP	
O-Xylene	7.63E+00	HAP	
Other C9's	3.74E+01		
n-Nonane	1.59E+01		
Other C10's	3.55E+01		
n-Decane	9.60E+00		
Undecanes (11)	8.14E+01		

TANKS 4.0.9d
Emissions Report - Detail Format
Tank Indentification and Physical Characteristics

Identification

User Identification:	Bashful Condensate
City:	Huntington
State:	West Virginia
Company:	Jay-Bee Oil & Gas
Type of Tank:	Vertical Fixed Roof Tank
Description:	210 BBL Condensate Tanks - Emissions from a Single Tank

Tank Dimensions

Shell Height (ft):		15.00
Diameter (ft):		10.00
Liquid Height (ft) :		14.00
Avg. Liquid Height (ft):		10.00
Volume (gallons):		8,225.29
Turnovers:		70.16
Net Throughput(gal/yr):		577,080.00
Is Tank Heated (y/n):	N	

Paint Characteristics

Shell Color/Shade:	Gray/Light
Shell Condition	Good
Roof Color/Shade:	Gray/Light
Roof Condition:	Good

Roof Characteristics

Type:	Cone	
Height (ft)		0.25
Slope (ft/ft) (Cone Roof)		0.04

Breather Vent Settings

Vacuum Settings (psig):	-0.03
Pressure Settings (psig)	0.03

Meterological Data used in Emissions Calculations: Huntington, West Virginia (Avg Atmospheric Pressure = 14.33 psia)

TANKS 4.0.9d
Emissions Report - Detail Format
Liquid Contents of Storage Tank

Bashful Condensate - Vertical Fixed Roof Tank
Huntington, West Virginia

Mixture/Component	Month	Daily Liquid Surf. Temperature (deg F) Avg.	Min.	Max.	Liquid Bulk Temp (deg F)	Vapor Pressure (psia) Avg.	Min.	Max.	Vapor Mol. Weight.	Liquid Mass Fract.	Vapor Mass Fract.	Mol. Weight	Basis for Vapor Pressure Calculations
Gasoline (RVP 6)	All	61.42	53.10	69.74	57.09	3.0220	2.5373	3.5797	69.0000			92.00	Option 4: RVP=6, ASTM Slope=3

TANKS 4.0.9d
Emissions Report - Detail Format
Detail Calculations (AP-42)

Bashful Condensate - Vertical Fixed Roof Tank
Huntington, West Virginia

Annual Emission Calcaulations	
Standing Losses (lb):	451.6638
Vapor Space Volume (cu ft):	399.2441
Vapor Density (lb/cu ft):	0.0373
Vapor Space Expansion Factor:	0.1508
Vented Vapor Saturation Factor:	0.5512
Tank Vapor Space Volume:	
Vapor Space Volume (cu ft):	399.2441
Tank Diameter (ft):	10.0000
Vapor Space Outage (ft):	5.0833
Tank Shell Height (ft):	15.0000
Average Liquid Height (ft):	10.0000
Roof Outage (ft):	0.0833
Roof Outage (Cone Roof)	
Roof Outage (ft):	0.0833
Roof Height (ft):	0.2500
Roof Slope (ft/ft):	0.0400
Shell Radius (ft):	5.0000
Vapor Density	
Vapor Density (lb/cu ft):	0.0373
Vapor Molecular Weight (lb/lb-mole):	69.0000
Vapor Pressure at Daily Average Liquid Surface Temperature (psia):	3.0220
Daily Avg. Liquid Surface Temp. (deg. R):	521.0866
Daily Average Ambient Temp. (deg. F):	54.8458
Ideal Gas Constant R (psia cuft / (lb-mol-deg R)):	10.731
Liquid Bulk Temperature (deg. R):	516.7558
Tank Paint Solar Absorptance (Shell):	0.5400
Tank Paint Solar Absorptance (Roof):	0.5400
Daily Total Solar Insulation Factor (Btu/sqft day):	1,246.2101
Vapor Space Expansion Factor	
Vapor Space Expansion Factor:	0.1508
Daily Vapor Temperature Range (deg. R):	33.2847
Daily Vapor Pressure Range (psia):	1.0425
Breather Vent Press. Setting Range(psia):	0.0600
Vapor Pressure at Daily Average Liquid Surface Temperature (psia):	3.0220
Vapor Pressure at Daily Minimum Liquid Surface Temperature (psia):	2.5373
Vapor Pressure at Daily Maximum Liquid Surface Temperature (psia):	3.5797
Daily Avg. Liquid Surface Temp. (deg R):	521.0866
Daily Min. Liquid Surface Temp. (deg R):	512.7654
Daily Max. Liquid Surface Temp. (deg R):	529.4077
Daily Ambient Temp. Range (deg. R):	20.0583
Vented Vapor Saturation Factor	
Vented Vapor Saturation Factor:	0.5512
Vapor Pressure at Daily Average Liquid: Surface Temperature (psia):	3.0220
Vapor Space Outage (ft):	5.0833

Working Losses (lb):	1,702.6152
Vapor Molecular Weight (lb/lb-mole):	69.0000
Vapor Pressure at Daily Average Liquid Surface Temperature (psia):	3.0220
Annual Net Throughput (gal/yr.):	577,080.0000
Annual Turnovers:	70.1592
Turnover Factor:	0.5943
Maximum Liquid Volume (gal):	8,225.2880
Maximum Liquid Height (ft):	14.0000
Tank Diameter (ft):	10.0000
Working Loss Product Factor:	1.0000
Total Losses (lb):	2,154.2790

TANKS 4.0.9d
Emissions Report - Detail Format
Individual Tank Emission Totals

Emissions Report for: Annual

Bashful Condensate - Vertical Fixed Roof Tank
Huntington, West Virginia

	Losses(lbs)		
Components	Working Loss	Breathing Loss	Total Emissions
Gasoline (RVP 6)	1,702.62	451.66	2,154.28

Per Tank x 2 Tanks =
4308.56 lb/yr Un-controlled
or 2.15 tpy ~~HAPs~~ uncontrolled
Assumed to be 100% VOC's
18% HAPs

April 24, 2014

FESCO, Ltd.
1100 Fesco Avenue - Alice, Texas 78332

For: Jay-Bee Oil & Gas, Inc.
1720 Route 22 East
Union, New Jersey 07083

Date Sampled: 04/07/14

Date Analyzed: 04/21/14

Sample: T 103-6

Job Number: J42799

FLASH LIBERATION OF HYDROCARBON LIQUID		
	Separator HC Liquid	**Stock Tank**
Pressure, psig	300	0
Temperature, °F	55	70
Gas Oil Ratio (1)	------	534
Gas Specific Gravity (2)	------	1.396
Separator Volume Factor (3)	1.3618	1.000

STOCK TANK FLUID PROPERTIES	
Shrinkage Recovery Factor (4)	0.7343
Oil API Gravity at 60 °F	71.19
Reid Vapor Pressure, psi (5)	9.33

Quality Control Check			
	Sampling Conditions	**Test Samples**	
Cylinder No.	------	W-2515*	W-2277
Pressure, psig	300	268	265
Temperature, °F	55	66	66

(1) - Scf of flashed vapor per barrel of stock tank oil
(2) - Air = 1.000
(3) - Separator volume / Stock tank volume
(4) - Fraction of first stage separator liquid
(5) - Absolute pressure at 100 deg F
Analyst: E.F.
* Sample used for flash study
Base Conditions: 14.85 PSI & 60 °F

Certified: FESCO, Ltd. - Alice, Texas

David Dannhaus 361-661-7015

April 29, 2014

FESCO, Ltd.
1100 FESCO Avenue - Alice, Texas 78332

For: Jay-Bee Oil & Gas, Inc.
1720 Route 22 East
Union, New Jersey 07083

Sample: T 103-6
Separator Hydrocarbon Liquid
Sampled @ 300 psig & 55 °F

Date Sampled: 04/07/14 Job Number: 42799.002

CHROMATOGRAPH EXTENDED ANALYSIS - GPA 2186-M

COMPONENT	MOL %	LIQ VOL %	WT %
Nitrogen	0.014	0.004	0.005
Carbon Dioxide	0.033	0.015	0.019
Methane	7.177	3.237	1.527
Ethane	9.830	6.997	3.920
Propane	12.024	8.817	7.031
Isobutane	3.637	3.168	2.803
n-Butane	10.238	8.591	7.891
2,2 Dimethylpropane	0.180	0.184	0.173
Isopentane	5.670	5.519	5.425
n-Pentane	7.291	7.035	6.976
2,2 Dimethylbutane	0.259	0.288	0.296
Cyclopentane	0.000	0.000	0.000
2,3 Dimethylbutane	0.388	0.423	0.443
2 Methylpentane	2.911	3.215	3.326
3 Methylpentane	1.892	2.056	2.163
n-Hexane	4.861	5.320	5.555
Heptanes Plus	33.596	45.132	52.448
Totals:	100.000	100.000	100.000

Characteristics of Heptanes Plus:

Specific Gravity	0.7391	(Water=1)
°API Gravity	59.95	@ 60°F
Molecular Weight	117.7	
Vapor Volume	19.93	CF/Gal
Weight	6.16	Lbs/Gal

Characteristics of Total Sample:

Specific Gravity	0.6360	(Water=1)
°API Gravity	90.98	@ 60°F
Molecular Weight	75.4	
Vapor Volume	26.77	CF/Gal
Weight	5.30	Lbs/Gal

Base Conditions: 14.850 PSI & 60 °F

Certified: FESCO, Ltd. - Alice, Texas

Analyst: XG
Processor: JCdjv
Cylinder ID: W-2415

David Dannhaus 361-661-7015

TANKS DATA INPUT REPORT - GPA 2186-M

COMPONENT	Mol %	LiqVol %	Wt %
Carbon Dioxide	0.033	0.015	0.019
Nitrogen	0.014	0.004	0.005
Methane	7.177	3.237	1.527
Ethane	9.830	6.997	3.920
Propane	12.024	8.817	7.031
Isobutane	3.637	3.168	2.803
n-Butane	10.418	8.775	8.064
Isopentane	5.670	5.519	5.425
n-Pentane	7.291	7.035	6.976
Other C-6's	5.450	5.982	6.228
Heptanes	10.149	12.070	13.219
Octanes	9.740	12.234	14.005
Nonanes	3.918	5.705	6.591
Decanes Plus	7.574	12.950	15.644
Benzene	0.090	0.067	0.093
Toluene	0.505	0.450	0.617
E-Benzene	0.427	0.438	0.601
Xylenes	1.193	1.218	1.679
n-Hexane	4.861	5.320	5.555
2,2,4 Trimethylpentane	0.000	0.000	0.000
Totals:	100.000	100.000	100.000

Characteristics of Total Sample:

Specific Gravity	0.6360	(Water=1)
°API Gravity	90.98	@ 60°F
Molecular Weight	75.4	
Vapor Volume	26.77	CF/Gal
Weight	5.30	Lbs/Gal

Characteristics of Decanes (C10) Plus:

Specific Gravity	0.7683	(Water=1)
Molecular Weight	155.8	

Characteristics of Atmospheric Sample:

°API Gravity	71.19	@ 60°F
Reid Vapor Pressure (ASTM D-5191)	9.33	psi

QUALITY CONTROL CHECK			
	Sampling Conditions	Test Samples	
Cylinder Number	------	W-2515*	W-2277
Pressure, PSIG	300	268	265
Temperature, °F	55	66	66

* Sample used for analysis

FESCO, Ltd. Job Number: 42799.002

TOTAL EXTENDED REPORT - GPA 2186-M

COMPONENT	Mol %	LiqVol %	Wt %
Nitrogen	0.014	0.004	0.005
Carbon Dioxide	0.033	0.015	0.019
Methane	7.177	3.237	1.527
Ethane	9.830	6.997	3.920
Propane	12.024	8.817	7.031
Isobutane	3.637	3.168	2.803
n-Butane	10.238	8.591	7.891
2,2 Dimethylpropane	0.180	0.184	0.173
Isopentane	5.670	5.519	5.425
n-Pentane	7.291	7.035	6.976
2,2 Dimethylbutane	0.259	0.288	0.296
Cyclopentane	0.000	0.000	0.000
2,3 Dimethylbutane	0.388	0.423	0.443
2 Methylpentane	2.911	3.215	3.326
3 Methylpentane	1.892	2.056	2.163
n-Hexane	4.861	5.320	5.555
Methylcyclopentane	0.433	0.408	0.483
Benzene	0.090	0.067	0.093
Cyclohexane	0.749	0.678	0.836
2-Methylhexane	2.360	2.921	3.137
3-Methylhexane	1.985	2.425	2.638
2,2,4 Trimethylpentane	0.000	0.000	0.000
Other C-7's	1.191	1.425	1.567
n-Heptane	3.430	4.212	4.558
Methylcyclohexane	2.138	2.288	2.784
Toluene	0.505	0.450	0.617
Other C-8's	5.547	7.144	8.107
n-Octane	2.055	2.802	3.113
E-Benzene	0.427	0.438	0.601
M & P Xylenes	0.523	0.540	0.736
O-Xylene	0.670	0.678	0.943
Other C-9's	2.764	3.975	4.626
n-Nonane	1.155	1.730	1.964
Other C-10's	2.343	3.704	4.390
n-decane	0.629	1.028	1.187
Undecanes(11)	1.946	3.156	3.794
Dodecanes(12)	1.166	2.043	2.489
Tridecanes(13)	0.722	1.357	1.676
Tetradecanes(14)	0.362	0.728	0.911
Pentadecanes(15)	0.194	0.418	0.530
Hexadecanes(16)	0.099	0.229	0.293
Heptadecanes(17)	0.051	0.123	0.159
Octadecanes(18)	0.033	0.085	0.110
Nonadecanes(19)	0.017	0.046	0.060
Eicosanes(20)	0.005	0.014	0.018
Heneicosanes(21)	0.003	0.009	0.012
Docosanes(22)	0.002	0.005	0.007
Tricosanes(23)	0.001	0.002	0.003
Tetracosanes(24)	0.000	0.001	0.002
Pentacosanes(25)	0.000	0.001	0.001
Hexacosanes(26)	0.000	0.001	0.001
Heptacosanes(27)	0.000	0.000	0.000
Octacosanes(28)	0.000	0.000	0.000
Nonacosanes(29)	0.000	0.000	0.000
Triacontanes(30)	0.000	0.000	0.000
Hentriacontanes Plus(31+)	0.000	0.000	0.000
Total	100.000	100.000	100.000

Condensate
Truck Loading Lost Emissions Per AP-42

Per AP-42, Chapter 5.2.2.1.1, the uncontrolled loading loss emission factor L_L can be estimated as follows:

$$L_L = 12.46[SPM/T]$$

Where:

L_L = uncontrolled loading loss in pounds per 1000 gallons of liquid loaded
S= saturation factor (0.6)
P=true vapor pressure of liquid loaded: 6.6 psia (per AP-42 conversion of RVP to TVP)
M= Molecular weight of vapor in lb/lb-mole 64.35 (see attached breathing vapor analysis report)
T= temperature of bulk liquid loaded in deg R or 460+deg F (60 Deg F)

Thus, L_L= 12.46[0.6 x 6.6 x 64.35]/[460+60]
L_L= 6.11 lb/1000 gallons loaded

Based on sample data of breathing vapor (attached), these emissions are 99.4% VOCs. It is assumed that vapor composition from truck loading is the same as that from the tank breathing vapors.

Given a maximum loading of 200 BBL (8,400 gallons) a day, uncontrolled VOC emissions are estimated at 51.02 lb of VOC per day [8,4 x 6.11 x .994]. With all daily loading taking place within 1 hour, the average hourly un-controlled emission rate is therefore also estimated at 51.02 lb/hr VOCs. Emissions from truck loading are un-controlled.

Maximum annual throughput is 1,154,160 gallons (27,480 barrels) per year. Thus, un-captured/un-controlled VOC emissions are conservatively estimated at 7023 pounds per year [1154 x 6.11 x .996] or 3.51 tons per year.

Based on the attached analysis of a representative tank's breathing emissions, HAPs represent 4.9 percent of the emissions. Thus, daily HAPs emissions equal 2.51 lb/hr [8.40 x 6.11 x 0.049]. Annual maximum HAPs emissions are estimated at 345 lb/yr [1154 x 6.11 x 0.049] or 0.17 tpy.

.

May 9, 2014

FESCO, Ltd.
1100 Fesco Ave. - Alice, Texas 78332

For: Jay-Bee Oil & Gas, Inc.
1720 Route 22 East
Union, New Jersey 07083

Sample: T 103-6
Breathing Vapor
From 0 psig & 70 °F to 0 psig & 100 °F

Date Sampled: 04/07/14 Job Number: 42799.011

CHROMATOGRAPH EXTENDED ANALYSIS - SUMMATION REPORT - GPA 2286

COMPONENT	MOL%	GPM
Hydrogen Sulfide*	< 0.001	
Nitrogen	0.000	
Carbon Dioxide	0.032	
Methane	0.023	
Ethane	0.533	0.144
Propane	13.569	3.768
Isobutane	9.746	3.214
n-Butane	31.720	10.079
2-2 Dimethylpropane	0.415	0.160
Isopentane	15.075	5.557
n-Pentane	16.449	6.010
Hexanes	9.639	4.004
Heptanes Plus	2.799	1.199
Totals	100.000	34.134

Computed Real Characteristics Of Heptanes Plus:

Specific Gravity	3.521	(Air=1)
Molecular Weight	97.70	
Gross Heating Value	5232	BTU/CF

Computed Real Characteristics Of Total Sample:

Specific Gravity	2.319	(Air=1)
Compressibility (Z)	0.9579	
Molecular Weight	64.35	
Gross Heating Value		
Dry Basis	3781	BTU/CF
Saturated Basis	3716	BTU/CF

*Hydrogen Sulfide tested in laboratory by: Stained Tube Method (GPA 2377)
Results: 0.031 Gr/100 CF, 0.5 PPMV or 0.0001 Mol %

Base Conditions: 14.850 PSI & 60 Deg F

Certified: FESCO, Ltd. - Alice, Texas

Analyst: MR
Processor: AL
Cylinder ID: ST# 2

David Dannhaus 361-661-7015

CHROMATOGRAPH EXTENDED ANALYSIS
TOTAL REPORT - GPA 2286

COMPONENT	MOL %	GPM	WT %
Hydrogen Sulfide*	< 0.001		< 0.001
Nitrogen	0.000		0.000
Carbon Dioxide	0.032		0.022
Methane	0.023		0.004
Ethane	0.533	0.144	0.249
Propane	13.569	3.768	9.299
Isobutane	9.746	3.214	8.803
n-Butane	31.720	10.079	28.652
2,2 Dimethylpropane	0.415	0.160	0.465
Isopentane	15.075	5.557	16.903
n-Pentane	16.449	6.010	18.443
2,2 Dimethylbutane	0.444	0.187	0.595
Cyclopentane	0.000	0.000	0.000
2,3 Dimethylbutane	0.617	0.255	0.826
2 Methylpentane	3.194	1.336	4.278
3 Methylpentane	1.835	0.755	2.458
n-Hexane	3.549	1.471	4.753
Methylcyclopentane	0.250	0.087	0.327
Benzene	0.052	0.015	0.063
Cyclohexane	0.293	0.101	0.383
2-Methylhexane	0.386	0.181	0.601
3-Methylhexane	0.362	0.166	0.564
2,2,4 Trimethylpentane	0.000	0.000	0.000
Other C7's	0.440	0.193	0.678
n-Heptane	0.390	0.181	0.607
Methylcyclohexane	0.251	0.102	0.383
Toluene	0.040	0.014	0.057
Other C8's	0.234	0.110	0.401
n-Octane	0.053	0.027	0.094
Ethylbenzene	0.001	0.000	0.002
M & P Xylenes	0.009	0.003	0.015
O-Xylene	0.001	0.000	0.002
Other C9's	0.034	0.017	0.067
n-Nonane	0.003	0.002	0.006
Other C10's	0.000	0.000	0.000
n-Decane	0.000	0.000	0.000
Undecanes (11)	0.000	0.000	0.000
Totals	100.000	34.134	100.000

Computed Real Characteristics Of Total Sample:

Specific Gravity ---------- 2.319 (Air=1)
Compressibility (Z) ---------- 0.9579
Molecular Weight ---------- 64.35

Gross Heating Value
Dry Basis ---------- 3781 BTU/CF
Saturated Basis ---------- 3716 BTU/CF

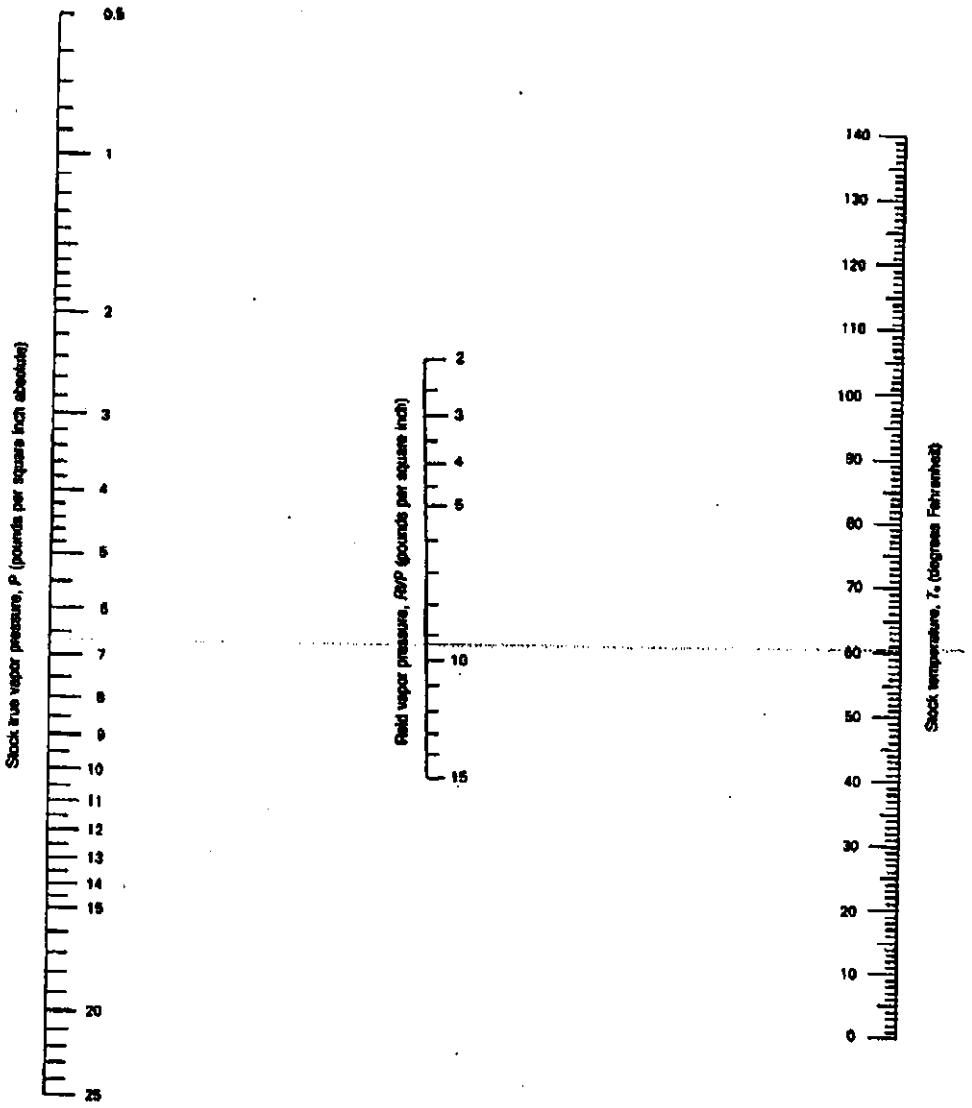

Figure 7.1-13a. True vapor pressure of crude oils with a Reid vapor pressure of 2 to 15 pounds per square inch.[4]

Jay-Bee Oil & Gas, Incorporated
Bashful Well Pad Production Facility
Water Tank Emissions

Utilizing direct measurements of the Gas to Water (GOW) ratio and flash gas composition from a nearby Jay-Bee well pad (Schulberg), the attached calculation spreadsheet was used to determine un-controlled VOC and HAP flash emissions from the Water tanks of 0.21 tpy and 0.02 tpy respectively for the revised maximum annual throughput of 25,200 BBL/Yr. Working and Breathing losses were deemed negligible. Thus, total uncontrolled produced water tank emissions are projected to be 0.21 tpy of VOCs and 0.02 tpy of HAPs. As emissions from these tanks are anticipated to be continuous, this is equivalent to 0.048 pounds per hour VOCs and 0.004 pounds per hour HAPs.

The largest component to the HAPs is Hexane. Using the process described above, potential un-controlled n-Hexane emissions were determined to be 0.01 tons per year or 0.002 pounds per hour.

Methane is also be emitted at a maximum rate of 0.27 tpy (0.06 lb/hr) from the water tanks. Using the GHG factor of 25 for Methane, the CO_{2e} uncontrolled emission rate is 6.75 tpy. This is equivalent to 1.5 lb/hr of CO_{2e}

During operation of the VRU, emissions are controlled at a minimum of 95%. Actual control efficiency is anticipated to be much higher, but only 95% is claimed as allowed under the G70-A General Permit. Thus, when in operation, emissions will be controlled to 0.01 pounds per hour of VOCs and <0.01 pounds per hour of HAPs. Methane and n-hexane emissions will also be controlled to 0.01 lb/hr and <0.01 lb/hr respectively.

The proposed Enclosed Combustor will control organic vapor emissions to at least 98%. Actual control efficiency is anticipated to be higher, but only 98% is claimed as allowed under the G70-A General Permit. Thus, when in operation, organic emissions from the combustor will also be controlled to <0.01 pounds per hour of VOCs, HAPs, methane and n-Hexane.

VRU Emissions

The VRU is permitted to operate continuously, except for brief intervals for preventive maintenance. It is conservatively estimated that the VRU will capture and control 95% of potential emissions. Thus, total potential tank emissions are calculated as follows:

VOCs

0.0024 lb/hr (Controlled) x 8760 = 21 lb/yr or 0.01 tpy

HAPs

0.0002 lb/Hr (Controlled) x 8760 = 2 lb/yr or <0.01 tpy

Methane
0.003 lb/Hr (Controlled) x 8760 = 27 lb/yr or 0.01 tons per year

Enclosed Combustor Emissions
In order to include the enclosed combustor into the G70-A permit, it is assumed that the combustor will operate full time. Thus, it is conservatively estimated that the combustor will capture and control 98% of potential emissions. Total potential tank emissions via the combustor are less than 0.01 lb/hr and less than 0.01 tpy for VOCs, HAPS, n-Hexane and Methane.

Gas Flow to Combustor
Total gas flow to the combustor from the water tanks is derived from the water flash calculation spreadsheets (0.516 tpy total organics). Using the density of the condensate vapor shown in the Excel spreadsheet (0.069 lb/scf), an annual gas flow to the combustor of 0.015 MMSCF/yr or 41 scfd was determined.

Using the HHV of 1431 BTU/scf of the condensate tank flash vapors as a conservative surrogate, this results in a maximum heat loading of 0.002 MMBTU/Hr.

Jay-Bee Oil & Gas - Bashful

Flash Emission Calculations - Produced Water

Using Gas-Water Ratio Method

Un-Controlled

Site specific data				
Gas-Water-ratio	=	0.41	scf/bbl	Using GOW from comparable well pad
Throughput	=	25,200	bbl/yr	
Stock tank gas molecular weight	=	39.56	g/mole	

Conversions			
1 lb	=	453.6	g
1 mole	=	22.4	L
1 scf	=	28.32	L
1 ton	=	2000	lb

Equations

$$E_{TOT} = Q\frac{(bbl)}{(yr)} \times R\frac{(scf)}{(bbl)} \times \frac{28.32(L)}{1(scf)} \times \frac{1(mole)}{22.4(L)} \times MW\frac{(g)}{(mole)} \times \frac{1(lb)}{453.6(g)}) \times \frac{1(ton)}{2000(lb)}$$

E_{TOT} = Total stock tank flash emissions (TPY)

R = Measured gas-oil ratio (scf/bbl)

Q = Throughput (bbl/yr)

MW = Stock tank gas molecular weight (g/mole)

$$E_{spec} = E_{TOT} \times X_{spec}$$

E_{spec} = Flash emission from constituent

X_{spec} = Weight fraction of constituent in stock tank gas

Flash Emissions

Constituent	TPY		
Total	0.5696		E_{TOT}
VOC	**0.2084**		Sum of C3+
Nitrogen	3.70E-03		
Carbon Dioxide	1.62E-02		
Methane	2.74E-01		
Ethane	6.77E-02		
Propane	4.44E-02		
Isobutane	2.46E-02		
n-Butane	2.73E-02		
2,2 Dimethylpropane	0.00E+00		
Isopentane	2.16E-02		
n-Pentane	1.54E-02		
2,2 Dimethylbutane	1.94E-03		
Cyclopentane	2.28E-04		
2,3 Dimethylbutane	1.19E-03		
2 Methylpentane	6.88E-03		
3 Methylpentane	4.18E-03		
n-Hexane	8.30E-03	HAP	
Methylcyclopentane	1.37E-03		
Benzene	1.69E-03	HAP	
Cyclohexane	1.97E-03		
2-Methylhexane	3.82E-03		
3-Methylhexane	3.38E-03		
2,2,4 Trimethylpentane	0.00E+00		
Other C7's	3.85E-03		
n-Heptane	5.09E-03		
Methylcyclohexane	4.58E-03		
Toluene	3.71E-03	HAP	
Other C8's	7.50E-03		
n-Octane	2.84E-03		
Ethylbenzene	1.71E-04	HAP	
M & P Xylenes	1.90E-03	HAP	
O-Xylene	3.19E-04	HAP	
Other C9's	5.98E-03		
n-Nonane	1.41E-03		
Other C10's	1.85E-03		
n-Decane	3.25E-04		
Undecanes (11)	6.21E-04		

September 14, 2012

FESCO, Ltd.
1100 Fesco Avenue - Alice, Texas 78332

For: Jay-Bee Oil & Gas, Inc.
1720 Route 22 East
Union, New Jersey 07083

Date Sampled: 08/21/2012

Date Analyzed: 08/27/2012

Job Number: J25159

Sample: Schulberg 1-HF

FLASH LIBERATION OF SEPARATOR WATER		
	Separator	**Stock Tank**
Pressure, psig	155	0
Temperature, °F	NA	70
Gas Water Ratio (1)	------	0.41
Gas Specific Gravity (2)	------	0.860
Separator Volume Factor (3)	1.000	1.000

(1) - Scf of water saturated vapor per barrel of stock tank water
(2) - Air = 1.000
(3) - Separator volume / Stock tank volume
Analyst: J. G.

Piston No. : WF-306

Base Conditions: 14.65 PSI & 60 °F

Certified: FESCO, Ltd. - Alice, Texas

David Dannhaus 361-661-7015

September 14, 2012

FESCO, Ltd.
1100 Fesco Ave. - Alice, Texas 78332

For: Jay-Bee Oil & Gas, Inc.
1720 Route 22 East
Union, New Jersey 07083

Sample: Schulberg 1-HF
Gas Evolved from Separator Water Flashed
From 155 psig & NA °F to 0 psig & 70 °F

Date Sampled: 08/21/2012 Job Number: 25159.001

CHROMATOGRAPH EXTENDED ANALYSIS - SUMMATION REPORT

COMPONENT	MOL%	GPM
Hydrogen Sulfide*	< 0.001	
Nitrogen	0.575	
Carbon Dioxide	1.602	
Methane	74.187	
Ethane	9.798	2.605
Propane	4.384	1.201
Isobutane	1.841	0.599
n-Butane	2.043	0.640
2-2 Dimethylpropane	0.000	0.000
Isopentane	1.305	0.475
n-Pentane	0.928	0.334
Hexanes	1.149	0.471
Heptanes Plus	2.188	0.952
Totals	100.000	7.278

Computed Real Characteristics Of Heptanes Plus:

Specific Gravity	3.616	(Air=1)
Molecular Weight	104.18	
Gross Heating Value	5424	BTU/CF

Computed Real Characteristics Of Total Sample:

Specific Gravity	0.860	(Air=1)
Compressibility (Z)	0.9946	
Molecular Weight	24.78	
Gross Heating Value		
Dry Basis	1426	BTU/CF
Saturated Basis	1402	BTU/CF

*Hydrogen Sulfide tested in laboratory by Stained Tube Method (GPA 2377)
Results: <0.013 Gr/100 CF, <0.2 PPMV or <0.001 Mol %

Base Conditions: 14.650 PSI & 60 Deg F

Certified: FESCO, Ltd. - Alice, Texas

Analyst: MR
Processor: MFG
Cylinder ID: FL-9

David Dannhaus 361-661-7015

CHROMATOGRAPH EXTENDED ANALYSIS
TOTAL REPORT

COMPONENT	MOL %	GPM	WT %
Hydrogen Sulfide*	< 0.001		< 0.001
Nitrogen	0.575		0.650
Carbon Dioxide	1.602		2.845
Methane	74.187		48.024
Ethane	9.798	2.605	11.888
Propane	4.384	1.201	7.800
Isobutane	1.841	0.599	4.318
n-Butane	2.043	0.640	4.791
2,2 Dimethylpropane	0.000	0.000	0.000
Isopentane	1.305	0.475	3.799
n-Pentane	0.928	0.334	2.702
2,2 Dimethylbutane	0.098	0.041	0.341
Cyclopentane	0.014	0.006	0.040
2,3 Dimethylbutane	0.060	0.024	0.209
2 Methylpentane	0.347	0.143	1.207
3 Methylpentane	0.211	0.086	0.734
n-Hexane	0.419	0.171	1.457
Methylcyclopentane	0.071	0.024	0.241
Benzene	0.094	0.026	0.296
Cyclohexane	0.102	0.035	0.346
2-Methylhexane	0.166	0.077	0.671
3-Methylhexane	0.147	0.067	0.594
2,2,4 Trimethylpentane	0.000	0.000	0.000
Other C7's	0.169	0.073	0.676
n-Heptane	0.221	0.101	0.894
Methylcyclohexane	0.203	0.081	0.804
Toluene	0.175	0.058	0.651
Other C8's	0.296	0.137	1.316
n-Octane	0.108	0.055	0.498
Ethylbenzene	0.007	0.003	0.030
M & P Xylenes	0.078	0.030	0.334
O-Xylene	0.013	0.005	0.056
Other C9's	0.206	0.104	1.049
n-Nonane	0.048	0.027	0.248
Other C10's	0.057	0.033	0.325
n-Decane	0.010	0.006	0.057
Undecanes (11)	0.017	0.010	0.109
Totals	100.000	7.278	100.000

Computed Real Characteristics Of Total Sample:

Specific Gravity ---------- 0.860 (Air=1)
Compressibility (Z) ---------- 0.9946
Molecular Weight ---------- 24.78

Gross Heating Value
Dry Basis ---------- 1426 BTU/CF
Saturated Basis ---------- 1402 BTU/CF

Produced Water
Truck Loading Lost Emissions Per AP-42

Per AP-42, Chapter 5.2.2.1.1, the uncontrolled loading loss emission factor L_L can be estimated as follows:

$$L_L = 12.46[SPM/T]$$

Where:

L_L = uncontrolled loading loss in pounds per 1000 gallons of liquid loaded
S= saturation factor (0.6)
P=true vapor pressure of liquid loaded: 0.3 psia (water at 60 Deg. F)
M= Molecular weight of vapor in lb/lb-mole 24.78 (flash gas of comparable water sample)
T= temperature of bulk liquid loaded in deg R or 460+deg F (60 Deg F)

Thus, L_L= 12.46[0.6 x 0.3 x 24.78]/[460+60]
L_L= 0.11 lb/1000 gallons loaded

Based on sample data of breathing vapor (attached), these emissions are 36.59% VOCs. It is assumed that vapor composition from truck loading is the same as that from the tank breathing vapors.

Given a maximum loading of 80 BBL (3,360 gallons) a day, uncontrolled VOC emissions are estimated at 0.14 lb of VOC per day [3.36 x 0.11 x .366]. With all daily loading taking place within 1 hour, the average hourly un-controlled emission rate is therefore also estimated at 0.14 lb/hr VOCs. Emissions from truck loading are un-controlled.

Maximum annual throughput is 1,058,400 gallons (25,200 barrels) per year. Thus, un-captured/un-controlled VOC emissions are conservatively estimated at 42.6 pounds per year [1058.4 x 0.11 x .366] or 0.02 tons per year.

.

September 14, 2012

FESCO, Ltd.
1100 Fesco Ave. - Alice, Texas 78332

For: Jay-Bee Oil & Gas, Inc.
1720 Route 22 East
Union, New Jersey 07083

Sample: Schulberg 1-HF
Gas Evolved from Separator Water Flashed
From 155 psig & NA °F to 0 psig & 70 °F

Date Sampled: 08/21/2012 Job Number: 25159.001

CHROMATOGRAPH EXTENDED ANALYSIS - SUMMATION REPORT

COMPONENT	MOL%	GPM
Hydrogen Sulfide*	< 0.001	
Nitrogen	0.575	
Carbon Dioxide	1.602	
Methane	74.187	
Ethane	9.798	2.605
Propane	4.384	1.201
Isobutane	1.841	0.599
n-Butane	2.043	0.640
2-2 Dimethylpropane	0.000	0.000
Isopentane	1.305	0.475
n-Pentane	0.928	0.334
Hexanes	1.149	0.471
Heptanes Plus	2.188	0.952
Totals	100.000	7.278

Computed Real Characteristics Of Heptanes Plus:

Specific Gravity	3.616	(Air=1)
Molecular Weight	104.18	
Gross Heating Value	5424	BTU/CF

Computed Real Characteristics Of Total Sample:

Specific Gravity	0.860	(Air=1)
Compressibility (Z)	0.9946	
Molecular Weight	24.78	
Gross Heating Value		
Dry Basis	1426	BTU/CF
Saturated Basis	1402	BTU/CF

*Hydrogen Sulfide tested in laboratory by Stained Tube Method (GPA 2377)
Results: <0.013 Gr/100 CF, <0.2 PPMV or <0.001 Mol %

Base Conditions: 14.650 PSI & 60 Deg F

Certified: FESCO, Ltd. - Alice, Texas

Analyst: MR
Processor: MFG
Cylinder ID: FL-9

David Dannhaus 361-661-7015

CHROMATOGRAPH EXTENDED ANALYSIS
TOTAL REPORT

COMPONENT	MOL %	GPM	WT %
Hydrogen Sulfide*	< 0.001		< 0.001
Nitrogen	0.575		0.650
Carbon Dioxide	1.602		2.845
Methane	74.187		48.024
Ethane	9.798	2.605	11.888
Propane	4.384	1.201	7.800
Isobutane	1.841	0.599	4.318
n-Butane	2.043	0.640	4.791
2,2 Dimethylpropane	0.000	0.000	0.000
Isopentane	1.305	0.475	3.799
n-Pentane	0.928	0.334	2.702
2,2 Dimethylbutane	0.098	0.041	0.341
Cyclopentane	0.014	0.006	0.040
2,3 Dimethylbutane	0.060	0.024	0.209
2 Methylpentane	0.347	0.143	1.207
3 Methylpentane	0.211	0.086	0.734
n-Hexane	0.419	0.171	1.457
Methylcyclopentane	0.071	0.024	0.241
Benzene	0.094	0.026	0.296
Cyclohexane	0.102	0.035	0.346
2-Methylhexane	0.166	0.077	0.671
3-Methylhexane	0.147	0.067	0.594
2,2,4 Trimethylpentane	0.000	0.000	0.000
Other C7's	0.169	0.073	0.676
n-Heptane	0.221	0.101	0.894
Methylcyclohexane	0.203	0.081	0.804
Toluene	0.175	0.058	0.651
Other C8's	0.296	0.137	1.316
n-Octane	0.108	0.055	0.498
Ethylbenzene	0.007	0.003	0.030
M & P Xylenes	0.078	0.030	0.334
O-Xylene	0.013	0.005	0.056
Other C9's	0.206	0.104	1.049
n-Nonane	0.048	0.027	0.248
Other C10's	0.057	0.033	0.325
n-Decane	0.010	0.006	0.057
Undecanes (11)	0.017	0.010	0.109
Totals	100.000	7.278	100.000

Computed Real Characteristics Of Total Sample:

Specific Gravity	0.860	(Air=1)
Compressibility (Z)	0.9946	
Molecular Weight	24.78	
Gross Heating Value		
Dry Basis	1426	BTU/CF
Saturated Basis	1402	BTU/CF

Jay-Bee Oil & Gas, Incorporated
Bashful Well Pad Production Facility
Loading to Combustor

As noted in the Project Overview, vapors released during the drop in pressure on the condensate and produced water as they are routed to the atmospheric pressure storage tanks (flash gas) and subsequent working and breathing losses during storage of condensate in these tanks will controlled a Vapor Recover Unit (VRU), with an Enclosed Combustor as backup for times when the VRU is down for repair or maintenance or if there is a slug of condensate generating more flash gas than the VRU can handle.

All waste gases are hard piped to the combustor. This hard pipe capture system is conservatively estimated at 99% effective. Additionally, the combustor is warranted by the manufacturer to have 99%+ destruction efficiency, resulting in an overall 98% reduction in VOC emissions from un-controlled emissions.

Based on actual flash liberation tests on both condensate tanks and produced water tanks at nearby well pads and working/breathing losses modeled by EPA's TANKS 4.0, loading to the combustor when the VRU is down is projected as follows:

Condensate Flash Gas	808.9	tpy	184.7	lb/hr
Produced Water Flash Gas	0.52	tpy	0.12	lb/hr
Working/Breathing Losses	2.15	tpy	0.49	lb/hr
Total	**811.6**	**tpy**	**185.3**	**lb/hr**

As shown in the emissions calculation spreadsheet, the density and heat content of the produced water flash gas and the condensate flash gas are as follows. It is assumed that working/breathing losses from the condensate tanks is the same as the flash gas from these tanks.

Condensate Flash Gas	Gas Density: 0.110 lb/scf	HHV: 2313 BTU/scf
Produced Water Flash Gas	Gas Density: 0.069 lb/scf	HHV: 1431 BTU/scf

Using this data, the heat loading to the combustor is determined as follows:

Condensate Flash Gas and Working Breathing Losses:
185.2 lb/hr/0.11 lb/scf = 1684 scf/hr and 3.89 MMBTU/Hr

Produced Water Flash Gas:
0.12 lb/hr/0.069 lb/scf = 1.7 scf/hr and 0.002 MMBTU/Hr

The total heat loading to the combustor (3.89 MMBTU/Hr) is well within the 10.0 MMBTU/Hr capacity of the combustor and capable of managing flash gas from any slugs of condensate that may enter the system.

The overall flow to the combustor is 1686 scf/hr (40,464 scf/day) at 2312 BTU/scf.

As noted in the Project Overview, the combustor is being permitted as if it will run full time. Thus, annual flow to the combustor is 14.77 MMSCF/yr.

VOC Emissions

VOC content of this combined vapor stream is 94.3%. With a 98% capture and control efficiency of all VOCs going to the combustor, hourly VOC emissions are 3.49 lb/hr [185.3 lb/Hr x 0.943 x 0.02] or 15.3 tpy (based on continuous usage). This hourly and annual VOC emission rate has been entered into the preceding emissions spreadsheet.

HAP Emissions

HAPs represent approximately 8.5% of the gas going to the combustor. Thus, in a similar manner as shown above, anticipated HAP emissions are 0.32 lb/hr [185.3 x 0.085 x 0.02] and 1.38 tpy.

Methane Emissions

As noted above, the maximum loading to the combustor is modeled at 185.3 lb/hr. Methane represents approximately 1.6% (weight) of the combined gas stream to the combustor or 2.89 lb/Hr. At a 2% incomplete combustion, non-combusted methane is 0.06 lb/hr or 0.24 tpy. These amounts are presented in the combustor calculation sheet in lieu of the AP-42 emission factors which are not appropriate for a gas stream of this composition.

Attachment I
FUGITIVE EMISSIONS FROM UNPAVED HAULROADS

UNPAVED HAULROADS (including all equipment traffic involved in process, haul trucks, endloaders, etc.)

		PM	PM-10
k =	Particle size multiplier	0.80	0.36
s =	Silt content of road surface material (%)	10	3
p =	Number of days per year with precipitation >0.01 in.	157	157

Item Number	Description	Number of Wheels	Mean Vehicle Weight (tons)	Mean Vehicle Speed (mph)	Miles per Trip	Maximum Trips per Hour	Maximum Trips per Year	Control Device ID Number	Control Efficiency (%)
1	Produced Water Tanker Truck	10	27	10	0.9	1	320	None	0
2	Condensate Tanker Truck	18	27	10	0.9	1	140	None	0
3									
4									
5									
6									
7									
8									

Source: *AP-42 Fifth Edition – 13.2.2 Unpaved Roads*

$E = k \times 5.9 \times (s \div 12) \times (S \div 30) \times (W \div 3)^{0.7} \times (w \div 4)^{0.5} \times ((365 - p) \div 365) =$ lb/Vehicle Mile Traveled (VMT)

Where:

		PM	PM-10
k =	Particle size multiplier	0.80	0.36
s =	Silt content of road surface material (%)	10	3
S =	Mean vehicle speed (mph)	10	10
W =	Mean vehicle weight (tons)	27	27
w =	Mean number of wheels per vehicle	18	18
p =	Number of days per year with precipitation >0.01 in.	157	157

For lb/hr: [lb ÷ VMT] × [VMT ÷ trip] × [Trips ÷ Hour] = lb/hr

For TPY: [lb ÷ VMT] × [VMT ÷ trip] × [Trips ÷ Hour] × [Ton ÷ 2000 lb] = Tons/year

SUMMARY OF UNPAVED HAULROAD EMISSIONS

Item No.	PM				PM-10			
	Uncontrolled		Controlled		Uncontrolled		Controlled	
	lb/hr	TPY	lb/hr	TPY	lb/hr	TPY	lb/hr	TPY
1	2.70	0.43	2.70	0.43	0.365	0.06	0.365	0.06
2	3.62	0.25	3.62	0.25	0.49	0.03	0.49	0.03
3								
4								
5								
6								
7								
8								
TOTALS	6.32	0.68	6.32	0.68	0.86	0.09	0.86	0.09

FUGITIVE EMISSIONS FROM PAVED HAULROADS

INDUSTRIAL PAVED HAULROADS (including all equipment traffic involved in process, haul trucks, endloaders, etc.)

I =	Industrial augmentation factor (dimensionless)	
n =	Number of traffic lanes	
s =	Surface material silt content (%)	
L =	Surface dust loading (lb/mile)	

Item Number	Description	Mean Vehicle Weight (tons)	Miles per Trip	Maximum Trips per Hour	Maximum Trips per Year	Control Device ID Number	Control Efficiency (%)
1	None						
2							
3							
4							
5							
6							
7							
8							

Source: *AP-42 Fifth Edition – 11.2.6 Industrial Paved Roads*

$E = 0.077 \times I \times (4 \div n) \times (s \div 10) \times (L \div 1000) \times (W \div 3)^{0.7} =$ lb/Vehicle Mile Traveled (VMT)

Where:

I =	Industrial augmentation factor (dimensionless)	
n =	Number of traffic lanes	
s =	Surface meterial silt content (%)	
L =	Surface dust loading (lb/mile)	
W =	Average vehicle weight (tons)	

For lb/hr: [lb ÷ VMT] × [VMT ÷ trip] × [Trips ÷ Hour] = lb/hr

For TPY: [lb ÷ VMT] × [VMT ÷ trip] × [Trips ÷ Hour] × [Ton ÷ 2000 lb] = Tons/year

SUMMARY OF PAVED HAULROAD EMISSIONS

Item No.	Uncontrolled		Controlled	
	lb/hr	TPY	lb/hr	TPY
1				
2				
3				
4				
5				
6				
7				
8				
TOTALS				

ATTACHMENT J

Class I Legal Advertisement

Affidavit Notice Will Be Submitted Upon Receipt

AIR QUALITY PERMIT NOTICE
Notice of Application

Notice is given that Jay-Bee Oil & Gas, Inc. has applied to the West Virginia Department of Environmental Protection, Division of Air Quality, for a modification permit for its Bashful Well Pad Production Facility located off of Bonelick Road near Stringtown, WV in Tyler County., West Virginia. The latitude and longitude coordinates are: Lat.39.47313, Long. -80.72104.

The applicant estimates following increases in the potential to emit the following regulated air pollutants:

1.23 tons of Nitrogen Oxides per year
6.37 tons of Carbon Monoxide per year
42.80 tons of Volatile Organics per year
0.00 tons of Sulfur Dioxide per year
0.77 tons of Particulate Matter per year
0.00 tons of Formaldehyde per year
3.22 tons of n-Hexane
2,162 tons of Greenhouse Gases per year

Startup of operation is planned to begin on or about the 12th day of February, 2016. Written comments will be received by the West Virginia Department of Environmental Protection, Division of Air Quality, 601 57th Street, SE, Charleston, WV 25304, for at least 30 calendar days from the date of publication of this notice.

Any questions regarding this permit application should be directed to the DAQ at (304) 926-0499, extension 1250, during normal business hours.

Dated this the **(Day)** day of **(Month)**, **(Year)**.

By: Mr. Shane Dowell
Office Manager
Jay-Bee Oil & Gas, Inc.
3570 Shields Hill Rd.
Cairo, WV 26337

ATTACHMENT O

Emissions Summary Sheets

G70-A EMISSIONS SUMMARY SHEET

Emission Point ID No.	Emission Point Type[1]	Emission Unit Vented Through This Point		Air Pollution Control Device		All Regulated Pollutants - Chemical Name/CAS[2]	Maximum Potential Uncontrolled Emissions [3]		Maximum Potential Controlled Emissions [4]		Emission Form or Phase	Est. Method Used [5]
		ID No.	Source	ID No.	Device Type	*(Speciate VOCs & HAPS)*	lb/hr	ton/yr	lb/hr	ton/yr	*(At exit conditions, Solid, Liquid or Gas/Vapor)*	
1E	Upward Vertical Stack	GPU-1	GPU	None		NOx	0.15	0.66	0.15	0.66	Gas	EE
						CO	0.13	0.55	0.13	0.55	Gas	EE
						VOC	0.01	0.04	0.01	0.04	Gas	EE
						PM	0.01	0.05	0.01	0.05	Solid	EE
						HCOH	<0.01	<0.01	<0.01	<0.01	Gas	EE
						Total HAPs	<0.01	0.01	<0.01	0.01	Gas	EE
						CO2e	181.2	794	181.2	794	Gas	EE
2E	Upward Vertical Stack	GPU-2	GPU	None		NOx	0.15	0.66	0.15	0.66	Gas	EE
						CO	0.13	0.55	0.13	0.55	Gas	EE
						VOC	0.01	0.04	0.01	0.04	Gas	EE
						PM	0.01	0.05	0.01	0.05	Solid	EE
						HCOH	<0.01	<0.01	<0.01	<0.01	Gas	EE
						Total HAPs	<0.01	0.01	<0.01	0.01	Gas	EE
						CO2e	181.2	794	181.2	794	Gas	EE
3E	Upward Vertical Stack	VRU-1	Engine	1C	NSCR	NOx	2.11	9.25	0.52	2.27	Gas	EE
						CO	2.71	11.87	0.89	3.89	Gas	EE
						VOC	0.05	0.21	0.02	0.09	Gas	EE
						PM	0.01	0.06	0.01	0.06	Solid	EE
						HCOH	0.02	0.07	<0.01	0.006	Gas	EE
						Total HAPs	0.02	0.11	0.01	0.04	Gas	EE
						CO2e	8	391	89	391	Gas	EE
9E	Fugitive	TL-1	Condensate Truck Loading	None		NOx					Gas	EE
						CO					Gas	EE
						VOC	51.0	3.51	51.0	3.51	Gas	EE
						PM					Solid	EE
						HCOH					Gas	EE
						Total HAPs	2.51	0.17	2.51	0.17	Gas	EE
						CO2e					Gas	EE
4E-5E	Fugitive	VRU-1	Water Tank Emissions	VRU-1/ EC-1	VRU	NOx					Gas	EE
						CO					Gas	EE
						VOC	0.05	0.21	<0.01	0.01	Gas	EE
						PM					Solid	EE
						HCOH					Gas	EE
						Total HAPs	<0.01	0.02	<0.01	<0.01	Gas	EE
						CO2e	1.5	6.8	<0.01	0.01	Gas	EE

G70-A EMISSIONS SUMMARY SHEET

6E-7E	Fugitive	VRU-1	Condensate Tank Emissions	VRU-1/ EC-1	VRU	NOx					Gas	EE
						CO					Gas	EE
						VOC	175.1	767	8.64	38.37	Gas	EE
						PM					Solid	EE
						HCOH					Gas	EE
						Total HAPs	15.8	69.3	0.79	3.46	Gas	EE
						CO2e	70.8	310	3.50	15	Gas	EE
8E	Upward Vertical Stack	TEG-1	Thermo-electric generator	None		NOx	<0.01	0.01	<0.01	0.01	Gas	EE
						CO	<0.01	0.01	<0.01	0.01	Gas	EE
						VOC	<0.01	<0.01	<0.01	<0.01	Gas	EE
						PM	<0.01	<0.01	<0.01	<0.01	Solid	EE
						HCOH	<0.01	<0.01	<0.01	<0.01	Gas	EE
						Total HAPs	<0.01	<0.01	<0.01	<0.01	Gas	EE
						CO2e	2	7	2	7	Gas	EE
10E	Fugitive	TL-2	Water Truck Loading	None		NOx					Gas	EE
						CO					Gas	EE
						VOC	0.14	0.02	0.14	0.02	Gas	EE
						PM					Solid	EE
						HCOH					Gas	EE
						Total HAPs					Gas	EE
						CO2e					Gas	EE
11E	Upward Vertical Stack	T01-T04	Enclosed Combustor	None		NOx			0.27	1.20	Gas	EE
						CO			1.45	6.35	Gas	EE
						VOC	175.1	767	3.49	15.33	Gas	EE
						PM			0.01	0.06	Solid	EE
						HCOH			<0.01	<0.01	Gas	EE
						Total HAPs	15.8	69.3	0.32	1.38	Gas	EE
						CO2e	70.8	310	467	2046	Gas	EE

The EMISSION SUMMARY SHEET provides a summation of emissions by emission unit. Note that uncaptured process emission unit emissions are not typically considered to be fugitive and must be accounted for on the appropriate EMISSIONS UNIT DATA SHEET and on the EMISSIONS SUMMARY SHEET. Please note that total emissions from the source are equal to all vented emissions, all fugitive emissions, plus all other emissions (e.g. uncaptured emissions). Please complete the FUGITIVE EMISSIONS DATA SUMMARY SHEET for fugitive emission activities.

[1] Please add descriptors such as upward vertical stack, downward vertical stack, horizontal stack, relief vent, rain cap, etc.

[2] List all regulated air pollutants. Speciate VOCs, including all HAPs. Follow chemical name with Chemical Abstracts Service (CAS) number. **LIST** Acids, CO, CS_2, VOCs, H_2S, Inorganics, Lead, Organics, O_3, NO, NO_2, SO_2, SO_3, all applicable Greenhouse Gases (including CO_2 and methane), etc. **DO NOT LIST** H_2, H_2O, N_2, O_2, and Noble Gases

[3] Give maximum potential emission rate with no control equipment operating. If emissions occur for less than 1 hr, then record emissions per batch in minutes (e.g. 5 lb VOC/20 minute batch).

[4] Give maximum potential emission rate with proposed control equipment operating. If emissions occur for less than 1 hr, then record emissions per batch in minutes (e.g. 5 lb VOC/20 minute batch).4C

[5] Indicate method used to determine emission rate as follows: MB = material balance; ST = stack test (give date of test); EE = engineering estimate; M = modeling; O = other (specify).

ATTACHMENT P

Other Supporting Documentation

Bashful Well Pad Production Facility
Attachment P
Regulatory Analysis

Both State and Federal environmental regulations governing air emissions apply to the planned modification to the Bashful Well Pad Production Facility. The West Virginia Department of Environmental Protection (WVDEP) has been delegated the authority to implement certain federal air quality requirements for the state. Air quality regulations that potentially affect the modification are discussed herein.

1.1 PSD and NSR

The facility will remain a minor source with respect to Prevention of Significant Deterioration (PSD) regulations as it will not have the potential to emit more than the annual emission thresholds of any PSD regulated pollutant with the voluntary restrictions (e.g., catalytic converter on the engine).

The facility is within an area designated as attainment for all criteria pollutants. Consequently, the facility is not subject to the New Source Review (NSR) regulations. Consequently, NSR requirements are not applicable to this project.

1.2 Title V Operating Permit Program

West Virginia has incorporated provisions of the federal Title V operating permit program. Thresholds for inclusion under the Title V program are 10 tpy of any single Hazardous Air Pollutant (HAP) or 25 tons of any combination of HAP and/or 100 tpy of all other regulated pollutants. Additionally, facilities regulated under certain New Source Performance Standards (NSPS) require facilities to have Title V permits.

The modified facility will remain a minor source. Additionally, the NSPS regulating this facility does not trigger a Title V permit. Hence, a Title V permit will not be required for the Bashful Well Pad Production Facility.

1.3 Aggregation

The addition of an enclosed combustor at the Bashful Well Pad will not impact the aggregation analysis completed and submitted with the initial application.

1.4 New Source Performance Standards

New Source Performance Standards (NSPS) regulations promulgated under 40 CFR 60 require new and reconstructed facilities to control emissions to the level achievable by Best-Available Control Technology (BACT). There are no potentially applicable NSPS requirements associated with the installation of the enclosed combustor at the Bashful Well Pad.

1.5 National Emission Standards for Hazardous Air Pollutants

National Emission Standards for Hazardous Air Pollutants (NESHAPs) promulgated under 40 CFR 63 regulate the emission of Hazardous Air Pollutants (HAPs) from certain industrial processes. In general, these rules apply to major sources of HAPs with a major source being defined as having the potential to emit more than 10 tpy of any individual HAP or 25 tpy of total HAPs. Emissions standards under these rules have been established as the Maximum Achievable Control Technology (MACT) for each source category. There are no NESHAP source category standards which are potentially applicable to the planned installation of a small enclosed combustor at the Bashful Well Pad Production Facility:

1.6 Chemical Accident Prevention

Subparts B-D of 40 CFR 68 present the requirements for the assessment and subsequent preparation of a Risk Management Plan (RMP) for a facility that stores more than a threshold quantity of a regulated substance listed in 40 CFR 68.130. If a facility stores, handles or processes one or more regulated substances in an amount greater than its corresponding threshold, the facility must prepare and implement an RMP. The Bashful Well Pad Production Facility stores more than 10,000 lbs of a flammable mixture (condensate) containing several of the substances listed in Table 3 in 40 CFR 68.130. However, an RMP is not required as this facility qualifies for the exclusion provided for remote oil and gas production facilities (40 CFR 68.115).

1.7 West Virginia State Requirements

1.7.1 45 CSR 2

The purpose of 45CSR2 is to control smoke and particulate matter emissions from fuel burning units. The facility is subject to the opacity requirement of 45 CSR 2. Emissions from the facility cannot exceed 10% over any six minute period.

1.7.2 45 CSR 4

This regulation prohibits the emission of objectionable odors. Jay-Bee Oil & Gas is obligated to run the station in a manner that does not produce objectionable odors.

1.7.3 45 CSR 6

This rule establishes emission standards for particulate matter and other requirements for incineration of refuse not subject to or specifically exempted from federal regulation. The planned combustor falls under this rule and must meet the visible emission requirements as well as the permitting requirements.

1.7.4 45 CSR 10

This regulation limits emissions of sulfur oxides. As the sulfur content of the Inlet Gas contains no measurable sulfur, emissions of sulfur oxides is negligible. Thus, while parts of this rule are applicable to the planned facility, no actions are required on the part of Jay-Bee Oil & Gas to attain compliance. The various non-engine process combustion units have a design heat input less than 10 MMBTU/Hr and are therefore exempt from the requirements of this rule.

1.7.5 45 CSR 13

The state regulations applicable to the permitting of the proposed construction are in Title 45 Series 13 of the Code of State Regulations. The proposed modification to the Bashful Well Pad Production Facility will result in a minor increase in potential emissions several regulated pollutants. Hence, this modification must be integrated into the facility's permit.

1.7.6 45 CSR 16

This series of regulations is an incorporation, by reference, of the New Source Performance Standards codified under 40 CFR 60. As discussed under the federal regulations, the Bashful Well Pad Production Facility will remain subject to the emission limitations, monitoring, testing and recordkeeping of Subpart JJJJ. The facility will also remain subject to Subpart OOOO.

1.7.7 45 CSR 30

The state regulations applicable to Title V operating permits are in Title 45 Series 30. The planned modification to the Bashful Well Pad Production Facility does not result in the facility having the potential to emit any regulated pollutant about the threshold that would define it as a major facility. Additionally, although the facility is subject to certain New Source Performance Standards, the NSPS applicable to this facility do not trigger the need to submit a Title V application and obtain a Title V permit. Hence this rule is not applicable.

1.7.8 Other Applicable Requirements

Through Series 34, WVDEP has adopted the National Emission Standards for Hazardous Air Pollutants for Source Categories. Both of these topics have been addressed above.