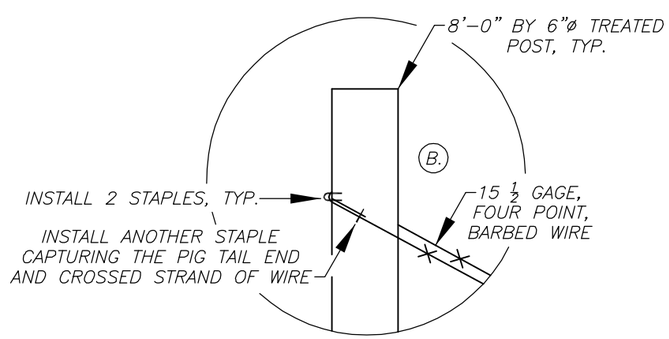

DETAIL "A"

NO SCALE

NOTES:

(A.) INSTALL BOTH SETS OF GATE SUPPORT POSTS PRIOR TO INSTALLING THE GATE. ALL POSTS SHALL BE 8'–0" BY 0'–6" ø OR 8'–0" AND 0'–6" BY 0'–6" SQUARE AND PRESSURE TREATED LUMBER.

(B.) WRAP FENCE AROUND EACH GATE SUPPORT POST EXTENDING FROM 6" TO 8" FROM THE TOP AND 6" TO 8" FROM THE GROUND POST FORMING A LOOP OF WIRE AROUND BOTH POSTS. OVERLAP ENDS OF LOOPED WIRE 4" MINIMUM IN EACH DIRECTION. OVERLAP SHOULD BE PLACED ON OUTSIDE OF INSTALLED GATE SUPPORT POST INSTALLATION AND ATTACHED TO THE GATE SUPPORT POST BY TWO 1 ½" NUMBER 9 STAPLES. PLACE THE STAPLES AT THE INTERSECTION OF THE OVERLAP FENCE STRANDS CAPTURING BOTH STRANDS. BEND THE PIG TAIL OF FENCE BACK ALONG THE ALIGNMENT OF THE FENCE AND INSTALL ANOTHER STAPLE CAPTURING BOTH STRANDS. REPEAT FOR OTHER OVERLAPPED STRAND. CONTINUE THE PROCESS ON THE OPPOSITE POST FORMING AN "X" CONFIGURATION AS SHOWN.

(C.) PLACE A STEEL BAR AT THE "X" INTERSECTION ADJACENT TO THE HORIZONTAL SUPPORT POST. TWIST THE FENCE STRANDS TOGETHER TO BRING THE GATE SUPPORT POSTS INTO TENSION.

(D.) INSTALL TWO 1 ½" NUMBER 9 STAPLES INTO THE HORIZONTAL SUPPORT POST AT THE END OF THE TWISTED STRANDS AS SHOWN, FOUR STAPLES ARE REQUIRED PER INSTALLATION.

GATE SHALL BE INSTALLED TO SWING OPEN MORE THAN 90°.

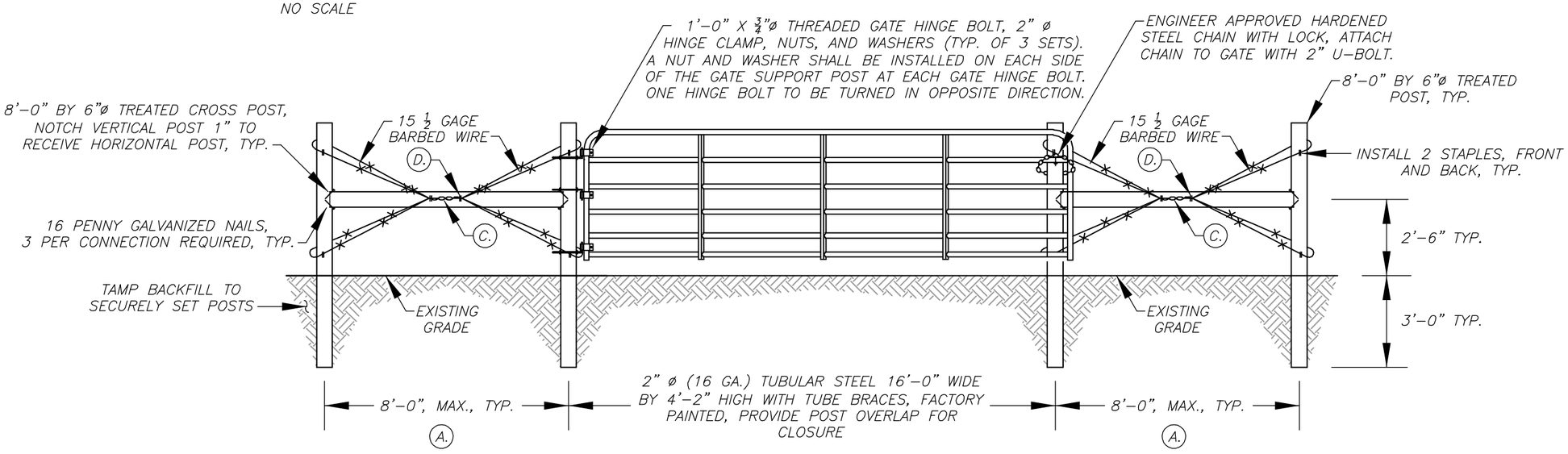

ELEVATION VIEW

DETAIL XX
FARM GATE

SCALE: 1" = 4 FEET