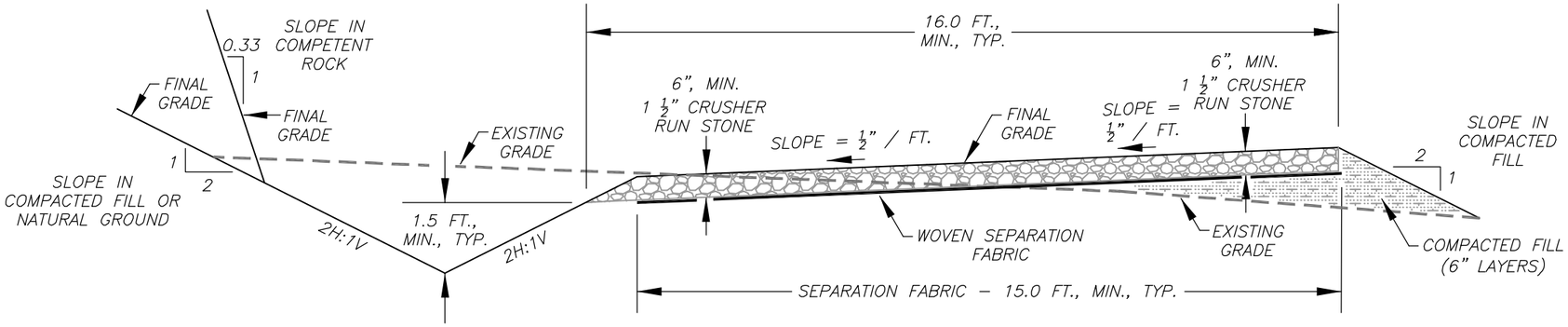

DETAIL XX
CONSTRUCTED ACCESS ROAD, TYP.
SCALE: 1" = 3 FEET

NOTES:
1. ROADWAY SURFACE MAY BE SLOPED TO EITHER SIDE AS TOPOGRAPHY AND CONDITIONS WARRANT.
2. 1 ½" CRUSHER RUN STONE SHALL MEET THE GRADATION REQUIREMENTS FOR CLASS I AGGREGATE IN TABLE 704.6.2A OF THE WVDOH STANDARD SPECIFICATIONS FOR ROADS AND BRIDGES.

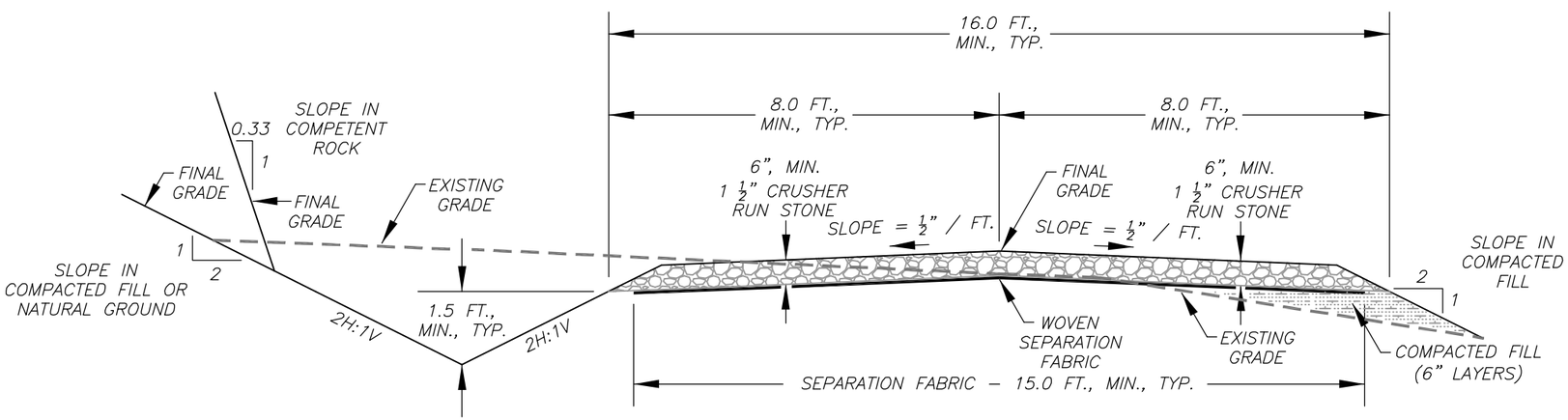

DETAIL XX
CONSTRUCTED ACCESS ROAD, TYP.
SCALE: 1" = 3 FEET

NOTES:
1. IN CUT THROUGH SECTIONS, CONSTRUCT DITCHES ON BOTH SIDES OF ROAD OR SLOPE THE ROADWAY TOWARD THE SOLITARY CONSTRUCTED DITCH.
2. CRUSHER RUN STONE SHALL BE ROLLER COMPACTED.
3. 1 ½" CRUSHER RUN STONE SHALL MEET THE GRADATION REQUIREMENTS FOR CLASS I AGGREGATE IN TABLE 704.6.2A OF THE WVDOH STANDARD SPECIFICATIONS FOR ROADS AND BRIDGES.