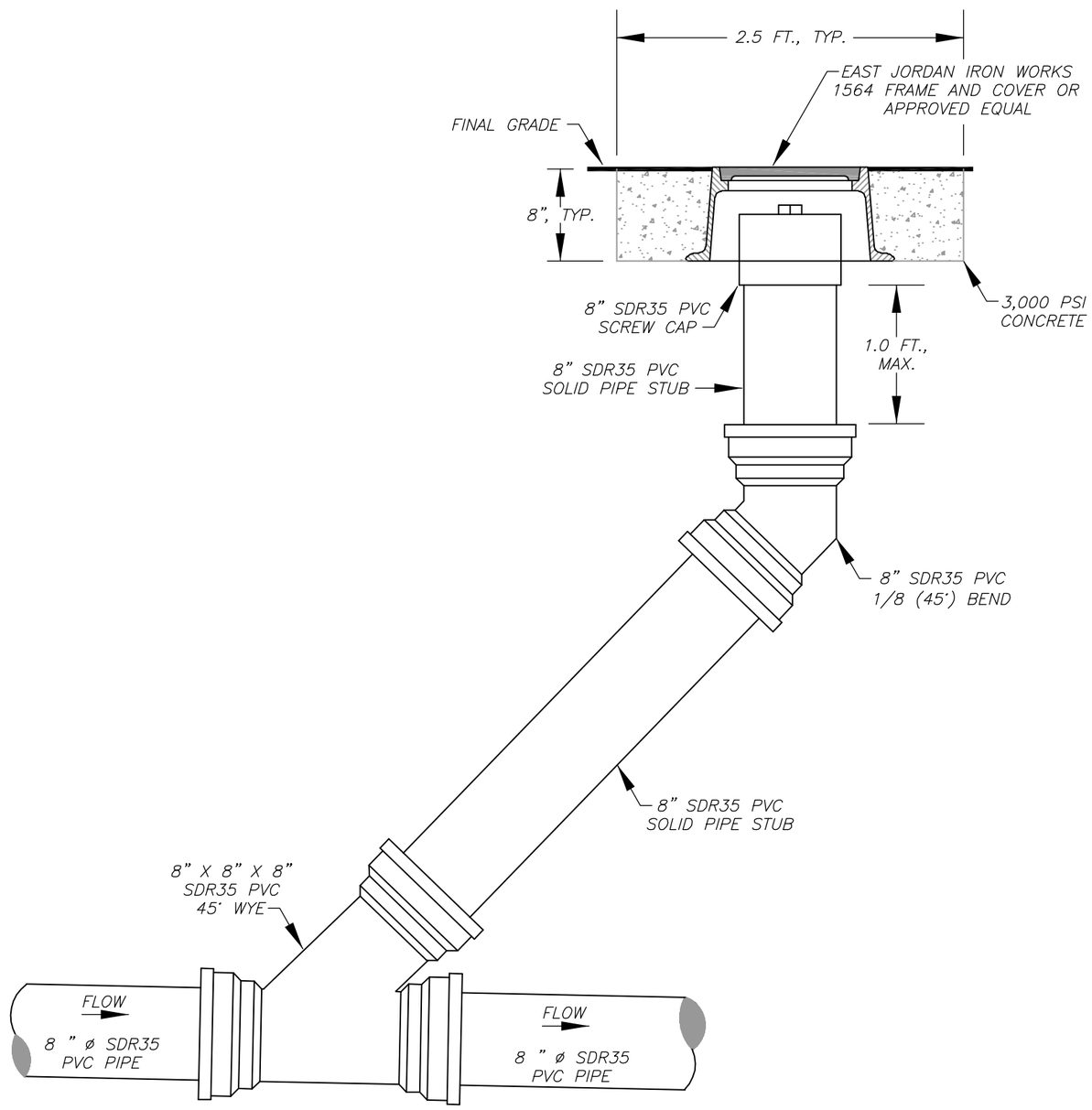

DETAIL XX
INLINE CLEAN-OUT 8"

SCALE: 1" = 1 FT.